AUTHENTICATED
U.S. GOVERNMENT
INFORMATION
GPO

FEDERAL REGISTER

Vol. 78 Thursday,
No. 211 October 31, 2013

Pages 65145–65514

OFFICE OF THE FEDERAL REGISTER

The **FEDERAL REGISTER** (ISSN 0097–6326) is published daily, Monday through Friday, except official holidays, by the Office of the Federal Register, National Archives and Records Administration, Washington, DC 20408, under the Federal Register Act (44 U.S.C. Ch. 15) and the regulations of the Administrative Committee of the Federal Register (1 CFR Ch. I). The Superintendent of Documents, U.S. Government Printing Office, Washington, DC 20402 is the exclusive distributor of the official edition. Periodicals postage is paid at Washington, DC.

The **FEDERAL REGISTER** provides a uniform system for making available to the public regulations and legal notices issued by Federal agencies. These include Presidential proclamations and Executive Orders, Federal agency documents having general applicability and legal effect, documents required to be published by act of Congress, and other Federal agency documents of public interest.

Documents are on file for public inspection in the Office of the Federal Register the day before they are published, unless the issuing agency requests earlier filing. For a list of documents currently on file for public inspection, see *www.ofr.gov.*

The seal of the National Archives and Records Administration authenticates the Federal Register as the official serial publication established under the Federal Register Act. Under 44 U.S.C. 1507, the contents of the **Federal Register** shall be judicially noticed.

The **Federal Register** is published in paper and on 24x microfiche. It is also available online at no charge at *www.fdsys.gov*, a service of the U.S. Government Printing Office.

The online edition of the **Federal Register** is issued under the authority of the Administrative Committee of the Federal Register as the official legal equivalent of the paper and microfiche editions (44 U.S.C. 4101 and 1 CFR 5.10). It is updated by 6:00 a.m. each day the **Federal Register** is published and includes both text and graphics from Volume 59, 1 (January 2, 1994) forward. For more information, contact the GPO Customer Contact Center, U.S. Government Printing Office. Phone 202-512-1800 or 866-512-1800 (toll free). E-mail, *gpo@custhelp.com.*

The annual subscription price for the **Federal Register** paper edition is $749 plus postage, or $808, plus postage, for a combined **Federal Register, Federal Register** Index and List of CFR Sections Affected (LSA) subscription; the microfiche edition of the **Federal Register** including the **Federal Register** Index and LSA is $165, plus postage. Six month subscriptions are available for one-half the annual rate. The prevailing postal rates will be applied to orders according to the delivery method requested. The price of a single copy of the daily **Federal Register,** including postage, is based on the number of pages: $11 for an issue containing less than 200 pages; $22 for an issue containing 200 to 400 pages; and $33 for an issue containing more than 400 pages. Single issues of the microfiche edition may be purchased for $3 per copy, including postage. Remit check or money order, made payable to the Superintendent of Documents, or charge to your GPO Deposit Account, VISA, MasterCard, American Express, or Discover. Mail to: U.S. Government Printing Office—New Orders, P.O. Box 979050, St. Louis, MO 63197-9000; or call toll free 1-866-512-1800, DC area 202-512-1800; or go to the U.S. Government Online Bookstore site, see *bookstore.gpo.gov.*

There are no restrictions on the republication of material appearing in the **Federal Register.**

How To Cite This Publication: Use the volume number and the page number. Example: 77 FR 12345.

Postmaster: Send address changes to the Superintendent of Documents, Federal Register, U.S. Government Printing Office, Washington, DC 20402, along with the entire mailing label from the last issue received.

SUBSCRIPTIONS AND COPIES

PUBLIC

Subscriptions:

Paper or fiche	**202–512–1800**
Assistance with public subscriptions	**202–512–1806**
General online information	**202–512–1530; 1–888–293–6498**

Single copies/back copies:

Paper or fiche	**202–512–1800**
Assistance with public single copies	**1–866–512–1800 (Toll-Free)**

FEDERAL AGENCIES

Subscriptions:

Paper or fiche	**202–741–6005**
Assistance with Federal agency subscriptions	**202–741–6005**

FEDERAL REGISTER WORKSHOP

THE FEDERAL REGISTER: WHAT IT IS AND HOW TO USE IT

FOR: Any person who uses the Federal Register and Code of Federal Regulations.

WHO: Sponsored by the Office of the Federal Register.

WHAT: Free public briefings (approximately 3 hours) to present:

1. The regulatory process, with a focus on the Federal Register system and the public's role in the development of regulations.
2. The relationship between the Federal Register and Code of Federal Regulations.
3. The important elements of typical Federal Register documents.
4. An introduction to the finding aids of the FR/CFR system.

WHY: To provide the public with access to information necessary to research Federal agency regulations which directly affect them. There will be no discussion of specific agency regulations.

WHEN: Tuesday, November 19, 2013
9 a.m.–12:30 p.m.

WHERE: Office of the Federal Register
Conference Room, Suite 700
800 North Capitol Street, NW.
Washington, DC 20002

RESERVATIONS: (202) 741–6008

Printed on recycled paper.

Contents

Federal Register

Vol. 78, No. 211

Thursday, October 31, 2013

Agency for Healthcare Research and Quality
NOTICES
Agency Information Collection Activities; Proposals, Submissions, and Approvals, 65318–65321
Meetings:
Five Subcommittees, 65321–65322
National Advisory Council for Healthcare Research and Quality, 65321

Agriculture Department
See Forest Service

Architectural and Transportation Barriers Compliance Board

PROPOSED RULES
Accessibility Guidelines:
Meetings; Rail Vehicles Access Advisory Committee, 65244

Army Department
See Engineers Corps
NOTICES
Meetings:
Western Hemisphere Institute for Security Cooperation Board of Visitors, 65300–65301

Arts and Humanities, National Foundation
See National Foundation on the Arts and the Humanities

Bureau of the Fiscal Service
NOTICES
Federal Debt Collection Rates, Discount and Rebate Evaluations, 65430–65431

Centers for Disease Control and Prevention
NOTICES
Agency Information Collection Activities; Proposals, Submissions, and Approvals, 65322–65326

Coast Guard
NOTICES
Agency Information Collection Activities; Proposals, Submissions, and Approvals, 65349–65352

Commerce Department
See Industry and Security Bureau
See International Trade Administration
See National Oceanic and Atmospheric Administration
NOTICES
Agency Information Collection Activities; Proposals, Submissions, and Approvals, 65264

Community Development Financial Institutions Fund
RULES
Financial Reporting Requirements for Non-Profit Organizations, 65151–65153
NOTICES
Funds Availabilities; Applications:
Community Development Financial Institutions Program, FY 2014, 65431–65440
Native American CDFI Assistance Program, FY 2014, 65440–65450

Consumer Product Safety Commission
NOTICES
Agency Information Collection Activities; Proposals, Submissions, and Approvals:
Publicly Available Consumer Product Safety Information Database, 65293–65297
Meetings; Sunshine Act, 65297

Coordinating Council on Juvenile Justice and Delinquency Prevention
NOTICES
Meetings:
Coordinating Council on Juvenile Justice and Delinquency Prevention, 65297–65298

Corporation for National and Community Service
NOTICES
Agency Information Collection Activities; Proposals, Submissions, and Approvals, 65298–65300

Defense Acquisition Regulations System
RULES
Defense Federal Acquisition Regulation Supplement:
Approval of Rental Waiver Requests, 65219–65220
New Designated Country—Croatia, 65220–65221
New Free Trade Agreement—Panama, 65221–65222
Only One Offer—Further Implementation, 65214–65218
Private Sector Notification Requirements of In-Sourcing Actions, 65218–65219
PROPOSED RULES
Defense Federal Acquisition Regulation Supplement:
Contractor Personnel Supporting U.S. Armed Forces Deployed Outside the United States, 65244–65248

Defense Department
See Army Department
See Defense Acquisition Regulations System
See Engineers Corps
See Navy Department
NOTICES
Environmental Assessments; Availability, etc.:
General Purpose Warehouse and Information Technology Center Construction, Tracy Site, 65300

Department of Transportation
See Pipeline and Hazardous Materials Safety Administration

Education Department
NOTICES
Agency Information Collection Activities; Proposals, Submissions, and Approvals:
Evaluation of a District Wide Implementation of a Professional Learning Community Initiative, 65302–65303
Requests for Information:
Title III Technical Assistance Agenda, Future Activities and Services, National Clearinghouse for English Language Acquisition, 65303–65304

Energy Department
See Federal Energy Regulatory Commission

PROPOSED RULES
Energy Conservation Program for Consumer Products:
Determination of Miscellaneous Residential Refrigeration Products as Covered Products, 65223–65231
NOTICES
Authority to Import and Export Gas:
Twin Eagle Resource Management Canada, LLC, et al., 65304
Meetings:
State Energy Advisory Board, 65305

Engineers Corps
NOTICES
Environmental Impact Statements; Availability, etc.:
Extension and Proposed US 17 Hampstead Bypass New Hanover and Pender Counties in North Carolina, NCDOT TIP Projects U–4751 and R–3300, 65301–65302

Environmental Protection Agency
RULES
National Oil and Hazardous Substances Pollution Contingency Plan:
National Priorities List; Deletion of the Sola Optical USA, Inc. Superfund Site, 65210
NOTICES
Best Practices for Continuous Monitoring of Temperature and Flow in Wadeable Streams, 65306–65308

Executive Office of the President
See Presidential Documents

Farm Credit Administration
RULES
Federal Agricultural Mortgage Corporation Funding and Fiscal Affairs:
Farmer Mac Capital Planning, 65145–65151

Federal Aviation Administration
RULES
Airworthiness Directives:
Agusta S.p.A. (Type certificate currently held by AgustaWestland S.p.A) (Agusta) Helicopters, 65161–65163
Airbus Airplanes, 65173–65175, 65187–65190
ATR – GIE Avions de Transport Regional Airplanes, 65183–65185
BAE SYSTEMS (OPERATIONS) LIMITED Airplanes, 65204–65206
Bell Helicopter Textron Canada (Bell) Helicopters, 65178–65180
Bell Helicopter Textron Canada Limited (Bell) Helicopters, 65200–65204, 65206–65208
Bombardier, Inc. Airplanes, 65176–65178, 65190–65193, 65198–65200
Eurocopter Deutschland GmbH Helicopters, 65169–65171
MD Helicopters, Inc. (MDHI) Helicopters, 65195–65198
MD Helicopters, Inc., Helicopters, 65180–65183
Sikorsky Aircraft Corporation-Manufactured (Sikorsky) Model Helicopters (type certificate currently held by Erickson Air-Crane Incorporated), 65163–65166
The Boeing Company Airplanes, 65166–65169, 65171–65173, 65185–65187, 65193–65195
Modification of Class D and E Airspace:
Kenai, AK, 65208–65209
Special Conditions:
Bombardier Inc., Models BD–500–1A10 and BD–500–1A11 series airplanes; Interactions of Systems and Structures, 65156–65161
Learjet Model 45 Series Airplanes; Aircraft Electronic System Security Protection from Unauthorized External Access, 65153–65154
Learjet Model 45 Series Airplanes; Isolation or Security Protection of the Aircraft Control Domain and the Airline Information Services Domain from the Passenger Services Domain, 65155–65156
PROPOSED RULES
Establishment of Class E Airspace:
Brevig Mission, AK, 65239–65240
Central, AK, 65237–65238
Eagle, AK, 65238–65239
Modification of Class D and Class E Airspace:
Kailua–Kona, HI, 65241–65242
Special Conditions:
Bombardier Inc., Models BD–500–1A10 and BD–500–1A11 Series Airplanes; Fuselage In-Flight Fire Safety and Flammability Resistance, 65231–65233
Bombardier Inc., Models BD–500–1A10 and BD–500–1A11 Series Airplanes; Fuselage Post-Crash Fire Survivability, 65233–65234
Learjet Inc., Model LJ 200 1A10 airplane; Crashworthiness, Emergency Landing Conditions, 65235–65237
NOTICES
Airport Property Releases:
Kearney Regional Airport, Kearney, NE, 65417–65418
Environmental Impact Policies and Procedures, 65418–65419
Noise Compatibility Program:
Tucson International Airport, Tucson, AZ, 65419–65420

Federal Communications Commission
NOTICES
Development of a Proposed Program Comment:
Review of Positive Train Control Facilities under the National Historic Preservation Act, 65308–65311

Federal Emergency Management Agency
RULES
Suspension of Community Eligibility, 65212–65214

Federal Energy Regulatory Commission
NOTICES
Applications:
Coleman Hydro, LLC, 65305–65306
Complaints:
Pella, IA v. Midcontinent Independent System Operator, Inc.; Mid-American Energy Co., 65306

Federal Highway Administration
NOTICES
Environmental Impact Statements; Availability, etc.:
Portageville Bridge Project, Wyoming and Livingston Counties, NY, 65420–65421

Federal Mine Safety and Health Review Commission
NOTICES
Meetings; Sunshine Act, 65311

Federal Railroad Administration
NOTICES
Agency Information Collection Activities; Proposals, Submissions, and Approvals, 65421–65422
Funding Availability:
Grants under the Railroad Rehabilitation and Repair Grant Program, 65422–65426

Federal Reserve System
NOTICES
Changes in Bank Control:
Acquisitions of Shares of a Bank or Bank Holding Company, 65311–65312
Acquisitions of Shares of a Savings and Loan Holding Company, 65312
Formations of, Acquisitions by, and Mergers of Bank Holding Companies, 65312
Proposals to Engage in or to Acquire Companies Engaged in Permissible Nonbanking Activities, 65312–65313

Federal Trade Commission
NOTICES
Proposed Consent Agreements:
Actavis, Inc., and Warner Chilott PLC, 65313–65315
Requests for Early Terminations of the Waiting Period under the Premerger Notification Rules, 65315–65317

Fish and Wildlife Service
PROPOSED RULES
Endangered and Threatened Wildlife and Plants:
Threatened Status for the Distinct Population Segment of the North American Wolverine in the Contiguous United States, 65248–65249
NOTICES
Permits:
Endangered Species; Marine Mammals, 65352–65354

Food and Drug Administration
NOTICES
Agency Information Collection Activities; Proposals, Submissions, and Approvals:
Electronic Products, 65329–65332
Experimental Study of Direct-to-Consumer Promotion Directed at Adolescents, 65326–65329
General Licensing Provisions; Biologics License Application, Changes to an Approved Application, Labeling, Revocation and Suspension, Postmarketing Studies Status Reports, 65334–65338
Guidance on Medical Devices: Pre-Submission Program and Meetings with Food and Drug Administration Staff, 65332–65334
Investigational New Drug Safety Reporting Requirements for Human Drug and Biological Products and Safety Reporting Requirements for Bioavailability and Bioequivalence Studies in Humans, 65338–65339
Premarket Approval of Medical Devices, 65339–65341

Forest Service
NOTICES
Meetings:
Land Between the Lakes Advisory Board, 65264

General Services Administration
RULES
Federal Travel Regulations:
Removal of Conference Lodging Allowance Provisions, 65210–65212

Health and Human Services Department
See Agency for Healthcare Research and Quality
See Centers for Disease Control and Prevention
See Food and Drug Administration
See Health Resources and Services Administration
See National Institutes of Health
NOTICES
Meetings:
National Committee on Vital and Health Statistics; Full Committee, 65318
National Committee on Vital and Health Statistics; Standards Subcommittee, 65317–65318

Health Resources and Services Administration
NOTICES
Discretionary Grant Funds, 65341–65342
Meetings:
National Advisory Council on Nurse Education and Practice, 65342

Healthcare Research and Quality Agency
See Agency for Healthcare Research and Quality

Homeland Security Department
See Coast Guard
See Federal Emergency Management Agency

Industry and Security Bureau
NOTICES
Meetings:
Materials Technical Advisory Committee, 65265

Interior Department
See Fish and Wildlife Service
See Land Management Bureau
See National Park Service

International Trade Administration
NOTICES
Antidumping and Countervailing Duty Investigations; Results, Extensions, Amendments, etc.:
Grain-Oriented Electrical Steel from the People's Republic of China, 65265–65268
Monosodium Glutamate from the People's Republic of China and the Republic of Indonesia, 65269–65272
Oil Country Tubular Goods from India, the Republic of Korea, the Republic of the Philippines, Saudi Arabia, Taiwan, Thailand, the Republic of Turkey, Ukraine, and the Socialist Republic of Vietnam, 65268–65269
Antidumping Duty Administrative Reviews; Results, Extensions, Amendments, etc.:
Circular Welded Carbon Steel Pipes and Tubes from Thailand, 65272–65274
Frozen Warmwater Shrimp from the People's Republic of China, 65277
Lined Paper Products from the People's Republic of China, 65274–65277
Antidumping Duty Investigations; Results, Extensions, Amendments, etc.:
Grain-Oriented Electrical Steel from the People's Republic of China, the Czech Republic, Germany, Japan, the Republic of Korea, Poland, and the Russian Federation, 65283–65289
Monosodium Glutamate from the People's Republic of China, and the Republic of Indonesia, 65278–65283
Determinations:
Diamond Sawblades and Parts Thereof from the People's Republic of China, 65289–65290
Request for Applicants for the Appointment to the United States–India CEO Forum, 65290–65291

Justice Department
NOTICES
Consent Decrees under the Clean Water Act, 65384

Consent Decrees under the Safe Drinking Water Act, 65385

Labor Department
See Occupational Safety and Health Administration
NOTICES
Agency Information Collection Activities; Proposals, Submissions, and Approvals:
Eligibility Data Form: Uniformed Services Employment and Reemployment Rights Act and Veterans' Preference, 65386–65387
Requirements for Occupational Safety and Health Administration Training Institute Education Centers Program, etc., 65385–65386

Land Management Bureau
NOTICES
Alaska Native Claims Selections, 65354
Environmental Impact Statements; Availability, etc.:
Proposed Lobos CO2 Pipeline Project in AZ and NM, etc., 65354–65355
Mailing Address Change for Utah West Desert District and Salt Lake Field Offices, 65356
Meetings:
Las Cruces District Resource Advisory Council, NM, 65356
Plats of Surveys:
Arizona, 65356

Mine Safety and Health Federal Review Commission
See Federal Mine Safety and Health Review Commission

National Foundation on the Arts and the Humanities
NOTICES
Meetings:
National Council on the Humanities, 65387

National Highway Traffic Safety Administration
NOTICES
Technical Report:
Evaluation of the Certified-Advanced Air Bags, 65426–65427

National Institutes of Health
NOTICES
Meetings:
Center for Scientific Review, 65342–65349
National Human Genome Research Institute, 65342
National Institute of Allergy and Infectious Diseases, 65343–65346, 65348
National Institute of Dental and Craniofacial Research, 65343, 65345, 65348
National Institute of Diabetes and Digestive and Kidney Diseases, 65347
National Institute on Alcohol Abuse and Alcoholism, 65347
National Institute on Minority Health and Health Disparities, 65345

National Oceanic and Atmospheric Administration
PROPOSED RULES
Endangered and Threatened Wildlife and Plants:
12-Month Finding and Proposed Endangered Listing of Five Species of Sturgeons under the Endangered Species Act, 65249–65263
NOTICES
Agency Information Collection Activities; Proposals, Submissions, and Approvals:
Atlantic Highly Migratory Species Release Reports, 65291–65292
Meetings:
North Pacific Fishery Management Council, 65292
Western Pacific Fishery Management Council, 65292

National Park Service
NOTICES
Inventory Completions:
Center for Archaeological Research at the University of Texas at San Antonio, San Antonio, TX, 65361–65362
Department of the Interior, National Park Service, Capitol Reef National Park, Torrey, UT, 65362–65364
Pima County Office of the Medical Examiner, Tucson, AZ, 65370–65371
University of Michigan, Ann Arbor, MI, 65357–65361, 65364–65384

National Science Foundation
NOTICES
Agency Information Collection Activities; Proposals, Submissions, and Approvals, 65387–65388

Navy Department
NOTICES
Meetings:
Military Readiness Activities in the Mariana Islands Training and Testing Study Area; Correction, 65302

Nuclear Regulatory Commission
NOTICES
Agency Information Collection Activities; Proposals, Submissions, and Approvals, 65388–65389
Cessation of Uranium Enrichment Activities:
United States Enrichment Corp., Paducah Gaseous Diffusion Plant, 65389–65390
Environmental Assessments; Availability, etc.:
Exemption from Licensing for Disposal of Low-Activity Radioactive Waste, U.S. Ecology Idaho Resource Conservation and Recovery Act Disposal Facility, 65390–65392

Occupational Safety and Health Administration
PROPOSED RULES
Occupational Exposure to Crystalline Silica:
Extension of Period to Submit Notices of Intention to Appear at Public Hearings; Scheduling of Public Hearings, 65242–65244

Pipeline and Hazardous Materials Safety Administration
RULES
Hazardous Materials:
Corrections and Response to Administrative Appeals (HM–215K, HM–215L, HM–218G and HM–219), 65454–65488
NOTICES
Pipeline Safety:
Requirements for Liquefied Petroleum Gas and Utility Liquefied Petroleum Gas Pipeline Systems; Correction of Advisory Bulletin, 65427–65429
Special Permits, 65429–65430

Postal Service
NOTICES
Product Changes:
Parcel Return Service Negotiated Service Agreement, 65392–65393
Priority Mail Express and Priority Mail Negotiated Service Agreement, 65393

Priority Mail Negotiated Service Agreement, 65393

Presidential Documents
PROCLAMATIONS
Special Observances:
Death of Thomas S. Foley (Proc. 9046), 65511–65513

Securities and Exchange Commission
NOTICES
Applications:
Ameritas Life Insurance Corp., et al., 65393–65396
Self-Regulatory Organizations; Proposed Rule Changes:
Chicago Board Options Exchange, Inc., 65402–65407
International Securities Exchange, LLC, 65400–65402
NASDAQ OMX BX Inc., 65396–65400
NYSE Arca, Inc., 65407–65416

Small Business Administration
NOTICES
Military Reservist Economic Injury Disaster Loans:
Interest Rate for First Quarter FY 2014, 65416

Tennessee Valley Authority
NOTICES
Environmental Impact Statements; Availability, etc.:
Integrated Resource Plan, 65416–65417

Transportation Department
See Federal Aviation Administration
See Federal Highway Administration
See Federal Railroad Administration
See National Highway Traffic Safety Administration
See Pipeline and Hazardous Materials Safety Administration

Treasury Department
See Bureau of the Fiscal Service
See Community Development Financial Institutions Fund
NOTICES
Agency Information Collection Activities; Proposals, Submissions, and Approvals, 65430

Veterans Affairs Department
PROPOSED RULES
Standard Claims and Appeals Forms, 65490–65509
NOTICES
Agency Information Collection Activities; Proposals, Submissions, and Approvals:
Neck (Cervical Spine) Conditions Disability Benefits Questionnaire, 65451–65452
Non-Degenerative Arthritis (Including Inflammatory, Autoimmune, Crystalline and Infectious Arthritis) and Dysbaric Osteonecrosis Disability Benefits Questionnaire, 65450
Shoulder and Arm Conditions Disability Benefits Questionnaire, 65451
Statement of Person Claiming to Have Stood in Relation of a Parent, 65450–65451
Veterans, Researchers, and IRB Members Experiences with Recruitment Restrictions, 65452

Separate Parts In This Issue

Part II
Transportation Department, Pipeline and Hazardous Materials Safety Administration, 65454–65488

Part III
Veterans Affairs Department, 65490–65509

Part IV
Presidential Documents, 65511–65513

Reader Aids

Consult the Reader Aids section at the end of this page for phone numbers, online resources, finding aids, reminders, and notice of recently enacted public laws.

To subscribe to the Federal Register Table of Contents LISTSERV electronic mailing list, go to http://listserv.access.gpo.gov and select Online mailing list archives, FEDREGTOC-L, Join or leave the list (or change settings); then follow the instructions.

CFR PARTS AFFECTED IN THIS ISSUE

A cumulative list of the parts affected this month can be found in the Reader Aids section at the end of this issue.

3 CFR

Proclamations:

9046 65513

10 CFR

Proposed Rules:

430 65223

12 CFR

652 65145

1805 65151

14 CFR

25 (3 documents) 65133, 65155, 65156

39 (20 documents) 65161, 65163, 65166, 65169, 65171, 65173, 65176, 65178, 65180, 65183, 65185, 65187, 65190, 65193, 65195, 65198, 65200, 65202, 65204, 65206

71 65208

Proposed Rules:

25 (3 documents) 65231, 65233, 65235

71 (4 documents) 65237, 65238, 65239, 65241

29 CFR

Proposed Rules:

1910 65242

1915 65242

1926 65242

36 CFR

Proposed Rules:

1192 65244

38 CFR

Proposed Rules:

3 65490

19 65490

20 65490

40 CFR

300 65210

41 CFR

Ch. 301 65210

301-11 65210

301-74 65210

304-3 65210

304-5 65210

44 CFR

64 65212

48 CFR

212 65214

215 65214

225 65214

237 65218

245 65219

252 (3 documents) 65214, 65220, 65221

Proposed Rules:

212 65244

225 65244

237 65244

242 65244

252 65244

49 CFR

171 65454

172 65454

173 65454

175 65454

176 65454

178 65454

50 CFR

Proposed Rules:

17 65248

224 65249

Rules and Regulations

Federal Register

Vol. 78, No. 211

Thursday, October 31, 2013

This section of the FEDERAL REGISTER contains regulatory documents having general applicability and legal effect, most of which are keyed to and codified in the Code of Federal Regulations, which is published under 50 titles pursuant to 44 U.S.C. 1510.

The Code of Federal Regulations is sold by the Superintendent of Documents. Prices of new books are listed in the first FEDERAL REGISTER issue of each week.

FARM CREDIT ADMINISTRATION

12 CFR Part 652

RIN 3052–AC80

Federal Agricultural Mortgage Corporation Funding and Fiscal Affairs; Farmer Mac Capital Planning

AGENCY: Farm Credit Administration.

ACTION: Final rule.

SUMMARY: The Farm Credit Administration (FCA or we) adopts a final rule that amends regulations governing operational and strategic planning of the Federal Agricultural Mortgage Corporation (Farmer Mac). Among other things, the final rule requires Farmer Mac to submit a capital plan to the Office of Secondary Market Oversight (OSMO) on an annual basis and requires Farmer Mac to notify OSMO under certain circumstances before making a capital distribution. The final rule revises the current capital adequacy planning requirements to place more emphasis on the quality and level of Farmer Mac's capital base and promote best practices for capital adequacy planning and stress testing. We view high quality capital as the primary resource that must be available to cover unexpected losses and ensure long-term financial flexibility and viability.

DATES: This regulation will be effective 30 days after publication in the **Federal Register** during which either or both Houses of Congress are in session. We will publish a notice of the effective date in the **Federal Register**.

FOR FURTHER INFORMATION CONTACT:

Joseph T. Connor, Associate Director for Policy and Analysis, Office of Secondary Market Oversight, Farm Credit Administration, McLean, VA 22102–5090, (703) 883–4280, TTY (703) 883–4056; or

Rebecca S. Orlich, Senior Counsel, Office of General Counsel, Farm Credit Administration, McLean, VA 22102–5090, (703) 883–4020, TTY (703) 883–4056.

SUPPLEMENTARY INFORMATION:

I. Objective

The objective of this rulemaking is to improve Farmer Mac's long-term safety and soundness and continuity of Farmer Mac operations so that Farmer Mac will be better positioned to fulfill its public mission under a range of economic conditions. We published a notice of proposed rulemaking (NPRM) on January 25, 2013.[1] The final rule (i) establishes minimum supervisory standards for the capital planning process, including stress testing, (ii) describes how the Farmer Mac board of directors (board) and senior management should implement the process, and (iii) requires Farmer Mac to notify FCA of certain capital distributions before making them.

II. Background

A. Farmer Mac

Farmer Mac is an institution of the Farm Credit System (System), regulated by the FCA through the OSMO. Congress established Farmer Mac in 1988 to create a secondary market for agricultural real estate mortgage loans, rural housing mortgage loans, and rural utilities loans, and it is an instrumentality of the United States. Title VIII of the Farm Credit Act of 1971, as amended (Act), governs Farmer Mac.[2] To cover any obligations of Farmer Mac on the loan guarantees it has issued, Farmer Mac has a $1.5 billion line of credit with the U.S. Treasury; however, Farmer Mac has never needed to draw on this line of credit.

Other institutions of the System are the Farm Credit Banks (AgFirst Farm Credit Bank, AgriBank Farm Credit Bank, the Farm Credit Bank of Texas), the Agricultural Credit Bank (CoBank, ACB), the banks' affiliated associations, and their related service organizations.[3] Farmer Mac is financially separate from the other System entities.

However, only the other System institutions are entitled to own, and do own, Class B voting common stock in Farmer Mac and, thus, have the right to elect five directors to the Farmer Mac board. The other class of voting stock, Class A, may be held only by insurance companies, banks, and financial entities that are not part of the System, and they also have the right to elect five directors to the Farmer Mac board. The remaining five board members are appointed by the President.

B. Capital Planning

The purpose of bank capital generally is to provide a cushion to absorb unexpected losses and improve an institution's long-term resilience throughout all phases of business and economic cycles. The recent global financial crisis underscored the importance of capital adequacy planning, including maintaining high quality capital. In response to the crisis, the Basel Committee on Banking Supervision (BCBS) proposed the Basel III framework, which expands and clarifies international standards on regulatory capital with the intent to raise the quality, quantity, and transparency of regulatory capital.[4] The Basel III framework also requires banks to run stress tests to ensure they are able to sustain financial soundness under adverse market conditions. In the U.S., the Dodd-Frank Wall Street Reform and Consumer Protection Act (Dodd-Frank Act) was enacted in July 2010 to strengthen regulation of the financial sector. Section 165 of the Dodd-Frank Act requires certain financial companies whose total consolidated assets are in excess of $10 billion to conduct annual stress tests. The U.S. banking agencies (the Federal Reserve System (FRS), Federal Deposit Insurance Corporation (FDIC), the Office of the Comptroller of the Currency (OCC)) and the Federal

[1] 78 FR 5320.

[2] The Act is set forth at 12 U.S.C. 2001 *et seq.* Title VIII is in 12 U.S.C. 2277aa–2279cc.

[3] The System associations make retail loans to the agricultural sector and to rural homeowners that are funded by their affiliated Farm Credit banks, and those banks obtain funds primarily by issuing System-wide obligations on which the banks are jointly and severally liable. The System-wide obligations are insured by the Farm Credit System Insurance Corporation (FCSIC). These other System institutions are examined and regulated by the FCA. They do not have authority to borrow from the U.S. Treasury to meet their obligations. Farmer Mac is not liable for the debt of the other System entities, nor are the other System entities liable for Farmer Mac's debt. Moreover, the FCSIC does not insure any debt issued by Farmer Mac.

[4] Bank for International Settlements, *Basel Committee on Banking Supervision, Basel III, A Global Regulatory Framework for More Resilient Banks and Banking Systems,* December 2010 (revised June 2011), *http://www.bis.org/publ/bcbs189.pdf.* The United States is a member of the BCBS.

Housing Finance Agency (FHFA) have issued rules and guidance to enhance capital standards and stress testing.[5] This final rule reflects our general agreement with the rulemaking actions of other banking supervision authorities, both domestic and international, which emphasize high quality capital maintenance, robust planning, and stress testing as adding value to the existing regulatory framework for capital adequacy and capital planning.

Farmer Mac's statutory capital standards were enacted in 1991[6] and have not been updated since 1996.[7] Under the Act, Farmer Mac must operate at or above a minimum ''core capital'' level and a minimum ''regulatory capital'' level. ''Core capital'' is defined in section 8.31(2) of the Act as the par value of outstanding common and preferred stock, paid-in capital, and retained earnings. Farmer Mac's minimum core capital requirement is an amount equal to the sum of 2.75 percent of on-balance-sheet assets and 0.75 percent of off-balance-sheet obligations. ''Regulatory capital'' is defined in section 8.31(5) as core capital plus an allowance for losses and guarantee claims (ALL). Farmer Mac's minimum risk-based capital requirement is the amount of regulatory capital for interest rate and credit risk determined by applying a risk-based capital stress test (RBCST) as defined in section 8.32(a) of the Act, plus an additional 30 percent of that amount for management and operations risk.

The regulatory requirements of the RBCST were implemented in FCA's regulations at part 652, subpart B in 2002 and have been revised several times. While the RBCST provides a valuable alternative perspective as a risk index of Farmer Mac's operations from quarter to quarter, the Act prescribes several components of the model's design that constrain its robustness as the only approach to calculating risk-based capital required by regulation. Under certain conditions, the Act's provisions do not impose a significant level of stress; for example, the Act's interest rate stress provisions do not impose a significantly stressful scenario of interest rate shock in very low interest rate environments such as the current one.[8] Moreover, there are a number of areas of the statutory design requirements in the RBCST that may no longer reflect best practices in economic capital modeling, which has advanced considerably since the provisions were enacted. We believe applying current best practices for comprehensive and robust stress testing approaches is prudent and warranted for capital planning.

In addition, the Act's minimum regulatory capital standards do not necessarily ensure that Farmer Mac holds a sufficient amount of high quality capital—primarily common equity and retained earnings—to survive periods of high financial stress. The statutory definition of ''core capital'' broadly defines the types of capital instruments that may be included without sufficient distinctions based on the quality of the capital components. More recent views of capital, including the Basel III framework for stock corporations, make much finer distinctions between, for example, different structures of preferred stock on the basis of the terms of their underlying contractual provisions. These finer distinctions include how much incentive is built into preferred stock terms for the issuer to redeem the shares. An example of such an incentive would be significant step-ups in dividend rates over time. Such provisions create greater uncertainty around the relative permanence of that capital and, therefore, how available it will be to cover unexpected losses in the future. The final rule revises the current capital adequacy planning requirements to increase our regulatory focus on the quality and level of capital and advance best practices for capital adequacy planning and stress testing at Farmer Mac.

III. Comment Letters

We received two comment letters, one from Farmer Mac and one from the Farm Credit Council. Both commenters generally acknowledge the value of sound capital planning practices to enable the regulated entity to fulfill its statutory mission over the long term.

Farmer Mac generally supported the NPRM's emphasis on capital planning best practices as well as its focus on quality of capital standards as being consistent with a greater ability to absorb unexpected losses and maintain safe and sound operations. The Farm Credit Council is a trade association that represents the interests of the Farm Credit banks, the banks' affiliated associations, and related service organizations. The Farm Credit Council does not represent Farmer Mac and, in its comment letter, stated that it was ''extremely concerned with the continuing lack of transparency regarding Farmer Mac's somewhat limited status as an institution of the [Farm Credit System].'' We are unsure what the Farm Credit Council means by Farmer Mac's status as an institution of the System being ''limited,'' but we refer readers of this rule to the Background section of this preamble for a delineation of the relationships between Farmer Mac and the other System institutions.[9]

In its comment letter, the Farm Credit Council made a number of recommendations for revisions to the proposed rule that are not permitted by the provisions of the Farm Credit Act that pertain to Farmer Mac. For example, the Farm Credit Council recommended that FCA include binding capital adequacy requirements through the capital plan and further require the Farmer Mac board to set capital levels consistent with all Basel III standards and at or above the levels required by regulators and financial authorities worldwide in the aftermath of the 2008 financial crisis. The Farm Credit Council further recommended that the rule limit the discretion of Farmer Mac's board so that the standard established is never less than the minimum amount required by the Basel III framework after inclusion of the conservation buffer. While the FCA has the authority and discretion to take supervisory and enforcement actions to address unsafe and unsound conditions and practices, sections 8.31 to 8.38 of the Act already

[5] *See, e.g.,* the FRS's final rule, Capital Plans, 76 FR 74631 (December 1, 2011); the FRS's proposed rule, Enhanced Prudential Standards and Early Remediation Requirements for Covered Companies, 77 FR 594 (January 5, 2012); the U.S. banking agencies' joint proposed rule, Regulatory Capital Rules; Advanced Approaches Risk-Based Capital Rule; Market Risk Capital Rule, 77 FR 52978 (August 30, 2012), and joint final rule adopted in July 2013; the FDIC's final rule, Annual Stress Test, 77 FR 62417 (October 15, 2012); the OCC's final rule, Annual Stress Test, 77 FR 61238 (October 12, 2012); and the FHFA's proposed rule, Stress Testing of Regulated Entities, 77 FR 60948 (October 5, 2012).

[6] Public Law 102–237, Title V, December 13, 1991.

[7] Public Law 104–105, Title I, February 10, 1996.

[8] Section 8.32(a)(2) requires interest rate shocks to be specified as the lesser of: (a) 50 percent of the 12-month average rates on 10-year Treasury obligations; or (b) 600 basis points. In the current interest rate environment, this requirement translates into an interest rate shock of just slightly more than 100 basis points.

[9] The Farm Credit Council also asserted that the Farm Credit Act ''specifically makes clear that Farmer Mac is a separate GSE,'' or Government-Sponsored Enterprise. A GSE is a descriptive term that has generally been used to refer to a number of government-sponsored, privately owned and operated corporations with a public mission to enhance the availability of mortgage, agricultural, or other types of credit in the U.S. Sometimes Farmer Mac has been treated as a separate GSE in financial reports and other documents, such as Government Accountability Office Reports. However, no provision of the Act makes mention of the term ''Government-Sponsored Enterprise.'' Consequently, we believe the assertion by the Farm Credit Council that Farmer Mac is a separate GSE is unsettled from a legal standpoint.

specify minimum statutory and regulatory capital requirements for Farmer Mac that differ from the Farm Credit Council's recommendations.

The Farm Credit Council also recommended strengthening the rule to ensure that all business risks, capital quality and leverage are reflected, to impose specific capital measurements on Farmer Mac rather than allowing Farmer Mac some flexibility to choose what capital measurements to apply, and to eliminate risk arising from capital arbitrage. We believe this new rule, with its focus on capital planning and capital adequacy, already requires Farmer Mac to address all business risks because adverse outcomes in any risk area impact capital levels either directly (e.g., fair value changes in available-for-sale investments) or indirectly (e.g., increased provision expense reduces net income closed out to retained earnings). We expect Farmer Mac to consider stress scenarios that reflect all business risks in its stress testing operations. We believe that capital quality and risks associated with capital structure (i.e., leverage) should also be considered in stress testing, and the proposed rule specifically incorporated capital adequacy ratios that require an evaluation of capital quality through its definition of Tier 1 equity. Regarding the recommendation that the rule specify the use of Basel III Tier 1 equity definitions, we believe the proposal appropriately makes reference to Basel III Tier 1 equity as indicative of the type of high quality capital measure FCA expects Farmer Mac to establish while, also appropriately, allowing sufficient flexibility to consider adjustment of that definition where it is justified. For example, adjustments may be appropriate to take into consideration Farmer Mac's status as a GSE and the specialized nature of its business providing a secondary market for agricultural mortgages and rural utility loans.

The Farm Credit Council commented that the rule should be strengthened to eliminate the risk arising from capital arbitrage. FCA expects Farmer Mac to hold adequate capital in relation to risk at all times and not merely in relation to regulatory minimum requirements. The precise level of risk in each agricultural mortgage differs and, therefore, so would the precisely adequate capital allocation to that loan. As a practical matter, such an ideal level of precision in capital allocation (and regulation) is difficult to achieve. For that reason, FCA closely monitors Farmer Mac's loan administration processes, including the risk ratings it allocates internally to its loans—which ratings have a direct impact on capital-to-risk weighted assets ratios and assessments of Farmer Mac's capital adequacy.

Finally, the Farm Credit Council commented that the rule should include binding capital adequacy requirements. This rulemaking makes clear the Agency's position that capital must not be managed solely in relation to the requirements set forth in the Act. Rather, the requirements in the Act should be weighed in the context of other perspectives on capital adequacy, including those set forth in this rulemaking.

IV. Section-by-Section Comments and Agency Responses

A. Section 652.60—Corporate Business Planning

The Farm Credit Council commented that our reference to ''goals and objectives'' in paragraph (a) was not clear because the cited section has no specific reference to ''goals and objectives.'' We intended the citation to refer to ''measurable goals and objectives'' required in § 652.60(b)(5) rather than to § 652.61(c)(2)(i)(B) and to provide a specific example found—the newly required minimum Tier 1 ratio found at § 652.61(c)(2)(ii)(A). We have corrected this in the final rule. The Farm Credit Council also stated that § 652.60 appears to limit board accountability as written. We believe that such an interpretation largely stems from the incorrect citation and that the correction of that citation makes much clearer the board's responsibility and accountability for setting capital adequacy requirements, including specific goals and objectives, and establishing a comprehensive capital plan.

The Farm Credit Council commented that the proposed rule should have included the same diversity and inclusion in Farmer Mac's human capital plan as are currently required in similar plans of System banks and associations. Because such provisions were not in the proposed rule, the Agency is not including such provisions in this final rule. The Agency has a rulemaking pending on this topic for which an Advance Notice of Proposed Rule Making was issued in 2011,[10] and we will take this comment into consideration as we continue our review in that rulemaking process.

The Farm Credit Council commented that capital plan requirements in the proposed rule do not match those that apply to System banks and associations (§ 615.5200). While we view most if not all of these elements as appropriate for inclusion in an operational and strategic plan for Farmer Mac, we believe they are included either specifically or in substance through other regulatory requirements and supervisory processes. For example, the sufficiency of liquid funds is required in § 652.35, the capability of management is covered in the proposed rule in § 652.60(b)(2). With the improved clarity provided by the corrected reference, we otherwise adopt these provisions as proposed.

The Farm Credit Council commented that Farmer Mac should be required ''beyond stress testing'' to review its existing business practices for ''accumulation of future risks'' and gives the example of accumulating agricultural mortgages without creating an actively trading secondary market in agricultural mortgage-backed securities which the Farm Credit Council believes to be a part of Farmer Mac's ''stated mission.'' We believe that the proposed rule's requirements consider not only existing practices and conditions but also potential future practices under § 652.61(c)(2)(i) scope of operations. That element requires an assessment of the expected uses and sources of capital over the planning horizon that reflects Farmer Mac's size, complexity, risk profile, and scope of operations, assuming both expected and stressful conditions, including projected revenues, losses, reserves, and pro forma capital levels, including the core capital and regulatory capital ratios required by sections 8.32 and 8.33 of the Act, the Tier 1 ratio as defined in this section, and any additional capital measures deemed relevant by Farmer Mac, over the planning horizon.

We believe that excessive program asset growth, or the ''accumulation of risks,'' could raise a concern related to adequate capital regardless of whether it is held on-balance sheet or off-balance sheet. However, The Farm Credit Council's comment did not include a citation to support its view that Farmer Mac's stated mission is to create an actively trading secondary market for agricultural mortgages or mortgage-backed securities; so we are unable to address that assertion.

The Farm Credit Council made a number of comments regarding the risks on Farmer Mac's balance sheet and the use of short-term funding and derivatives as related to Farmer Mac's mission. We note that re-funding risk management is being addressed by FCA under a separate rulemaking in the proposed Liability Maturity Management Plan (LMMP) proposed in the currently pending rulemaking

[10] 76 FR 35158, June 16, 2011.

governing liquidity management.[11] For these reasons, we adopt these provisions as proposed.

B. Section 652.61—Capital Planning

Farmer Mac commented that the definition of ''Capital Action'' (§ 652.61(b)) includes issuance of debt or equity as well as any similar action that OSMO determines could impact Farmer Mac's consolidated capital. Farmer Mac believes this provision, combined with the provision requiring the inclusion in the capital plan of all planned capital actions over the planning horizon (§ 652.61(b)), could be unduly burdensome because the nature, volume, and timing of debt or equity transactions will vary, making it difficult to apply OSMO guidance received from past transactions. In response we clarify that the requirement to include planned capital actions in the capital plan does not prohibit unplanned capital actions over the planning horizon and would not prevent Farmer Mac from acting on advantageous developments in the markets that might motivate an unplanned capital action. We further clarify that our reference to debt in this context was intended to refer to debt that can impact consolidated capital, such as certain subordinated debt.

We did not intend to include normal debt issuance operations in the definition of ''capital action.'' Most of the debt routinely issued by Farmer Mac does not affect its consolidated capital; so it would not be included in this definition. To eliminate confusion, we have deleted the reference to debt in the final rule. Should Farmer Mac issue debt that does affect its consolidated capital, the FCA has authority to determine to treat it as a capital action.

The Farm Credit Council asked FCA to remove OSMO's discretion to approve an alternative definition of Tier 1 Capital that Farmer Mac might submit and instead require it to select from the analogous definitions established by Basel III, the Office of the Controller of the Currency (OCC), the Federal Deposit Insurance Corporation (FDIC), or the Federal Reserve. It further requested that our regulations follow specifically Basel III and establish definitions for Common Equity Tier 1 (CET1), as well as Tier 2 capital ratios and that those be set in the regulations no lower than the levels applied to ''other regulated lenders.'' The Notice of Proposed Rule Making proposed a Tier 1 capital definition (and Additional Tier 1 capital) which stipulated the selected approach must be as set forth in Basel III or as defined by the OCC, FDIC or the Federal Reserve. This provision is generally consistent with what the Farm Credit Council is requesting but includes additional flexibility for OSMO to consider a submitted alternative measure of high quality capital. The added flexibility to consider an alternative (but similar) approach is appropriate because we do not share the Farm Credit Council's view that an international standard is quickly solidifying (e.g. Basel III and Federal regulators' approaches are not exactly the same). We finalize this definition as proposed but note that OSMO will base its approval on whether any submitted alternative approach is both justified on the basis of Farmer Mac's relatively unique business model and sufficiently consistent with and as strong as the approaches adopted by other regulators.

The Farm Credit Council expressed concern that the proposed rule contains no indication of consequences for receiving an unfavorable OSMO review of a capital plan, while other System institutions would receive a capital directive ''if their capital ratios are unmet.'' It further states that FCA has not clearly identified its intent with respect to enforcing the proposed rule requirements. We clarify here that a deficient plan would result in heightened oversight and supervision as it would with any other FCA regulated entity—along with potential changes in Farmer Mac's assigned Financial Institution Rating System ratings, as well as any other enforcement tool at our disposal. We also note that § 615.5355(a), which describes the purpose of a capital directive and the scope of its issuance, does not provide for the issuance of a capital directive to a System bank or association for failure to meet the minimum capital levels the institution sets for itself under the capital planning regulation in § 615.5200, that applies to System institutions other than Farmer Mac. Likewise, the FCA does not anticipate issuing a capital directive to Farmer Mac for failure to achieve the minimum capital ratios it sets in its capital plan.

The Farm Credit Council stated its belief that it would be prudent for the FCA to notify the authorizing congressional committees if Farmer Mac submits a deficient plan to OSMO. In response, we note that such notification would be an option for FCA regardless of whether it is required by the regulations.

The Farm Credit Council expressed concern that the proposed rule does not require Farmer Mac to make public its capital plan and its ongoing compliance with internal board-established minimum capital levels. The Farm Credit Council asked FCA to require Farmer Mac to publish a summary of its capital plan including internal board-set minimum capital ratios and to disclose immediately to shareholders when it fails to comply with the plan. We believe that such a revision in the final rule is not necessary to achieve the purposes of the rule; so we are not adopting the Farm Credit Council's suggestion at this time. However, we will take this suggestion into consideration in future rulemakings.

C. Section 652.62—Notice to OSMO of Capital Distributions

Farmer Mac commented that the 15-day notice required in advance of board consideration of a capital distribution is likely to be impractical and burdensome as applied to debt instruments. As described above, in the final rule we are revising the definition of ''capital distribution'' generally to limit its application to equity instruments only. Therefore, a 15-day notice will not be required for issuances of debt unless the FCA makes a determination to treat a particular debt instrument as equity because it affects Farmer Mac's consolidated capital.

Farmer Mac also commented that redemptions of equity that are ''an inherent component'' of the instrument, such as dividend rate step-ups in preferred stock issuances, may be impractical for timing-related reasons. Farmer Mac stated that such transactions might only be raised as an item for board consideration just prior to the Board's meeting, rather than a period of more than 15 days. We believe that, despite the fact that step-ups can be thought of as making redemption an inherent component of some issuances, they are infrequent and important enough that planning for board consideration of such transactions should always be done in the context of strategic planning that is long term or at least intermediate term, rather than over a period that is very short term. We believe that boards should be provided ample time to deliberate over such requests and that management should be prepared to present and justify such requests well in advance of 15 days of the board's consideration. As we stated in the preamble to the proposed rule, we believe an enhanced level of dialogue between the Agency and Farmer Mac in advance of capital distributions will improve the level of FCA's oversight of, and communication with, the regulated entity. Such enhanced dialogue will also provide the board with valuable external perspective on such decisions from both safety and soundness and

[11] 76 FR 71798 (November 18, 2011).

mission achievement points of view. For all of these reasons, we do not view the proposed notification timeframe as impractical, and we adopt as final the provision as proposed with respect to the advance notification.

However, we believe the comment has merit as it pertains to capital distributions that the board has already been informed of through the capital planning process. A shorter time allotted for final board deliberation on planned capital distributions is appropriately left to the discretion of board's guidance to management because the board has already approved the capital plan and with it the anticipated distribution in accordance with its strategic vision and broader operational planning process. Therefore, we revise this section to eliminate the notification requirement for capital distributions set forth in the capital plan (i.e., specifically scheduled as to amount and timing along with a discussion of the planned distribution) submitted to FCA. This new exception to the notification requirement in the final rule would not apply in the event that OSMO determines a capital plan has not adequately taken into account OSMO's assessment as required under § 652.61(f) in accordance with newly added § 652.62(c).

The Farm Credit Council commented that the capital distribution notice requirement lacks specificity regarding supervisory action and should include detail on when OSMO would prohibit a distribution. The Farm Credit Council stated its belief that FCA should not allow Farmer Mac to pay any dividends if it is not in compliance with its capital plan and there should not be standing authority for Farmer Mac to pay dividends if the amount per share is unchanged from prior period. The Farm Credit Council points to the fact that the Agency has consistently taken the position that System banks and associations are not permitted to pay patronage unless the institution can demonstrate compliance with regulatory capital standards. The Farm Credit Council asks that FCA be consistent in its policy on capital distributions with System banks and associations and other banking regulators.

We believe that Farmer Mac would effectively be held to the same standard the Farm Credit Council points to in its comment. That is, if Farmer Mac were unable to demonstrate compliance with its regulatory capital standards, the Agency could bring an enforcement action which would likely put an end to common dividend payments and possibly preferred dividends as well. However, to address the Farm Credit Council's concerns in the final rule, § 652.62(c) is revised to eliminate the standing authority for Farmer Mac to pay dividends if the amount per share is unchanged from prior period (as well as planned distributions regardless of change from prior periods) if OSMO determines a Farmer Mac capital plan has not adequately taken into account OSMO's assessment as required under § 652.61(f).

Farmer Mac asked us to clarify whether the requirement in proposed § 652.61(c)(1)(iii) that the Farmer Mac board review the capital plan can be delegated to a committee and whether FCA expects the board to receive a written report that addresses all of the considerations specified in the proposed rule. The FCA confirms that the rule requires the entire board of Farmer Mac to review and approve the written capital plan before submission to the FCA, and such review is not delegable to a committee.

V. Regulatory Flexibility Act

Farmer Mac has assets and annual income in excess of the amounts that would qualify it as a small entity. Therefore, Farmer Mac is not a ''small entity'' as defined in the Regulatory Flexibility Act. Pursuant to section 605(b) of the Regulatory Flexibility Act (5 U.S.C. 601 *et seq.*), the FCA hereby certifies that the final rule will not have a significant economic impact on a substantial number of small entities.

List of Subjects in 12 CFR Part 652

Agriculture, Banks, banking, Capital, Investments, Rural areas.

For the reasons stated in the preamble, part 652 of chapter VI, title 12 of the Code of Federal Regulations is amended as follows:

PART 652—FEDERAL AGRICULTURAL MORTGAGE CORPORATION FUNDING AND FISCAL AFFAIRS

■ 1. The authority citation for part 652 continues to read as follows:

Authority: Secs. 4.12, 5.9, 5.17, 8.11, 8.31, 8.32, 8.33, 8.34, 8.35, 8.36, 8.37, 8.41 of the Farm Credit Act (12 U.S.C. 2183, 2243, 2252, 2279aa–11, 2279bb, 2279bb–1, 2279bb–2, 2279bb–3, 2279bb–4, 2279bb–5, 2279bb–6, 2279cc); sec. 514 of Pub. L. 102–552, 106 Stat. 4102; sec. 118 of Pub. L. 104–105, 110 Stat. 168.

■ 2. Revise § 652.60 to read as follows:

§ 652.60 Corporate business planning.

(a) Farmer Mac's board of directors is responsible for ensuring that Farmer Mac maintain capital at a level that is sufficient to ensure continued financial viability and provide for growth. In addition, Farmer Mac's capital must be sufficient to meet statutory and regulatory requirements as well as the goals and objectives required by paragraph (b)(5) of this section, including the Tier 1 ratio required in § 652.61(c)(2)(ii)(A). Farmer Mac must notify the OSMO within 10 calendar days of determining that capital is not sufficient to meet those goals and objectives.

(b) No later than 65 days after the end of each calendar year, Farmer Mac's board of directors must adopt an operational and strategic business plan for at least the next 3 years. The plan must include:

(1) A mission statement;

(2) A business and organizational overview and an assessment of management capabilities;

(3) An assessment of Farmer Mac's strengths and weaknesses;

(4) A review of the internal and external factors that are likely to affect Farmer Mac during the planning period;

(5) Measurable goals and objectives;

(6) A discussion of how these factors might impact Farmer Mac's current financial position and business goals;

(7) Forecasted income, expense, and balance sheet statements for each year of the plan;

(8) A marketing plan, and

(9) A capital plan in accordance with § 652.61.

■ 3. Add §§ 652.61 and 652.62 to read as follows:

§ 652.61 Capital planning.

(a) *Purpose.* This section establishes capital planning requirements for Farmer Mac.

(b) *Definitions.* For purposes of this section and § 652.62, the following definitions apply:

Basel III means the Basel Committee on Banking Supervision's document ''Basel III: A Global Regulatory Framework for More Resilient Banks and Banking Systems,'' June 2011 and as it may be updated from time to time.

Capital action means any issuance of an equity capital instrument, and any capital distribution, as well as any similar action that OSMO determines could impact Farmer Mac's consolidated capital.

Capital distribution means a redemption or repurchase of any equity capital instrument, a payment of common or preferred stock dividends, a payment that may be temporarily or permanently suspended by the issuer on any instrument that is eligible for inclusion in the numerator of any minimum capital ratio, and any similar transaction that OSMO determines to be in substance a distribution of capital.

Capital plan means a written presentation of Farmer Mac's capital planning strategies and capital adequacy process that includes the mandatory elements set forth in paragraph (c)(2) of this section.

Capital policy means Farmer Mac's written assessment of the principles and guidelines used for capital planning, capital issuance, usage and distributions, including internal capital goals; the quantitative or qualitative guidelines for dividend and stock repurchases; the strategies for addressing potential capital shortfalls; and the internal governance procedures around capital policy principles and guidelines.

Planning horizon means the period of at least 12 quarters, beginning with the quarter preceding the quarter in which Farmer Mac submits its capital plan, over which the relevant projections extend.

Tier 1 Capital means the components meeting the criteria of Common Equity Tier 1 Capital and Additional Tier 1 Capital and the regulatory adjustments as set forth in Basel III, or Tier 1 Capital as defined in regulations of the Office of the Comptroller of the Currency, the Board of Governors of the Federal Reserve, or the Federal Deposit Insurance Corporation, as revised from time to time; or another measure of high quality capital as approved for use under this regulation by the Director of OSMO.

Tier 1 ratio means the ratio of Farmer Mac's Tier 1 Capital to Total Risk-Weighted Assets.

Total Risk-Weighted Assets means a risk-weighting approach that is appropriate given Farmer Mac's business activities and consistent with broadly accepted banking practices and standards (*e.g.,* one of the frameworks of the Basel Committee on Banking Supervision or similar U.S. regulations).

(c) *General requirements.* (1) *Annual capital planning.*

(i) Farmer Mac must develop and maintain a capital plan each year.

(ii) Farmer Mac must submit its complete annual capital plan to OSMO by March 1 or such later date as directed by OSMO, after consultation with the FCA Board.

(iii) Prior to submission of the capital plan under paragraph (c)(1)(ii) of this section, Farmer Mac's board of directors must:

(A) Review the robustness of Farmer Mac's process for assessing capital adequacy,

(B) Ensure that any deficiencies in Farmer Mac's process for assessing capital adequacy are appropriately remedied; and

(C) Approve Farmer Mac's capital plan.

(2) *Mandatory elements of capital plan.* The capital plan must contain at least the following elements:

(i) An assessment of the expected uses and sources of capital over the planning horizon that reflects Farmer Mac's size, complexity, risk profile, and scope of operations, assuming both expected and stressful conditions, including:

(A) Projected revenues, losses, reserves, and pro forma capital levels, including the core capital and regulatory capital ratios required by sections 8.32 and 8.33 of the Act, the Tier 1 ratio as defined in this section, and any additional capital measures deemed relevant by Farmer Mac, over the planning horizon under expected conditions and under a range of at least two progressively severe stress scenarios developed by Farmer Mac appropriate to its business model and portfolios, as well as any scenarios provided by the Director of OSMO. At least 15 calendar days prior to this stress testing, Farmer Mac must provide to OSMO a description of the expected and stressed scenarios that Farmer Mac intends to use to conduct its annual stress test under this section.

(B) A description of all planned capital actions over the planning horizon.

(ii) A detailed description of Farmer Mac's process for assessing capital adequacy, including:

(A) A discussion of how Farmer Mac will, under expected and stressed conditions, maintain capital commensurate with its risks, maintain capital above the minimum core capital and regulatory capital ratios and above the Tier 1 ratio set in accordance with a well-articulated risk tolerance policy established by the board of directors;

(B) A discussion of how Farmer Mac will, under expected and stressed conditions, maintain sufficient capital to continue its operations by maintaining ready access to funding, meeting its obligations to creditors and other counterparties, and continuing to serve its statutory purposes; and

(C) A discussion of the results of the risk-based stress test required by section 8.32 of the Act and the stress tests required by this section, as well as any other stress test required by law or regulation, and an explanation of how the capital plan takes these results into account.

(iii) Farmer Mac's capital policy; and

(iv) A discussion of any expected changes to Farmer Mac's business plan that are likely to have a material impact on the Corporation's capital adequacy or liquidity.

(d) *Review of capital plan by OSMO.* (1) OSMO will consider the following factors in reviewing Farmer Mac's capital plan:

(i) The comprehensiveness of the capital plan, including the extent to which the analysis underlying the capital plan captures and addresses risks stemming from activities across Farmer Mac's business lines and operations;

(ii) The reasonableness of Farmer Mac's assumptions and analysis underlying the capital plan and its methodologies for reviewing the robustness of its capital adequacy process; and

(iii) Farmer Mac's ability to maintain capital above the minimum core capital and regulatory capital ratios and above a Tier 1 ratio set in accordance with a risk tolerance policy established by the board of directors on a pro forma basis under expected and stressful conditions throughout the planning horizon, including but not limited to any stressed scenarios required under paragraphs (c)(2)(i)(A) and (c)(2)(ii) of this section.

(iv) All supervisory information about Farmer Mac and its subsidiaries;

(v) Farmer Mac's regulatory and financial reports, as well as supporting data that would allow for an analysis of its loss, revenue, and projections;

(vi) As applicable, OSMO's own pro forma estimates of Farmer Mac's potential losses, revenues, and resulting capital adequacy measurements under expected and stressful conditions, including but not limited to any stressed scenarios required under paragraphs (c)(2)(i)(A) and (c)(2)(ii) of this section, as well as the results of any other stress tests conducted by Farmer Mac or OSMO; and

(vii) Other information requested or required by OSMO, as well as any other information relevant to Farmer Mac's capital adequacy.

(e) *OSMO action on a capital plan.* (1) OSMO will review the capital plan and provide an assessment to Farmer Mac of the capital adequacy and planning process through its ongoing examination and oversight process.

(2) Upon a request by OSMO, Farmer Mac must provide OSMO with sufficient information regarding its planning assumptions, stress test strategies and results and any other relevant qualitative or quantitative information requested by OSMO to facilitate review of Farmer Mac's capital plan under this section.

(3) OSMO may require Farmer Mac to revise and re-submit its capital plan.

(f) *Farmer Mac response to OSMO's assessment.* Regardless of whether re-submission is required, Farmer Mac

must take the results of the stress tests conducted under paragraphs (c)(2)(i)(A) and (c)(2)(ii) of this section (including any revisions required under paragraph (e)(3) of this section) as well as OSMO's assessment into account in making changes, as appropriate, to Farmer Mac's capital structure (including the level and composition of capital); its exposures, concentrations, and risk positions; any plans for recovery and resolution; and to improve overall risk management. Farmer Mac must document in writing its actions in response to the stress tests and assessment, as well as decisions not to take actions in response to any issues raised in the assessment.

§ 652.62 Notice to OSMO of capital distributions.

(a) Farmer Mac must provide OSMO with notice 15 calendar days prior to a board consideration of a declaration of a capital distribution or any material changes in capital distributions policies.

(b) Except as provided in paragraph (c), notice under paragraph (a) of this section is not required with respect to capital distributions set forth (i.e., specifically scheduled as to amount and timing along with a discussion of the planned distribution) in the capital plan or a regular periodic payment of dividends on common stock and preferred stock when there is no change in the amount of payment per share from the previous period.

(c) In the event that OSMO determines a capital plan has not adequately taken into account OSMO's assessment as required under § 652.61(f), the exception described in paragraph (b) of this section shall not apply, and Farmer Mac must provide notification of any and all capital distributions as set forth in paragraph (a) of this section.

Dated: October 25, 2013.

Mary Alice Donner,

Acting Secretary, Farm Credit Administration Board.

[FR Doc. 2013–25892 Filed 10–30–13; 8:45 am]

BILLING CODE 6705–01–P

DEPARTMENT OF THE TREASURY

Community Development Financial Institutions Fund

12 CFR Part 1805

Modification of Financial Reporting Requirements for Non-Profit Organizations

AGENCY: Community Development Financial Institutions Fund (CDFI Fund), Department of the Treasury.

ACTION: Interim rule.

SUMMARY: The mission of the Community Development Financial Institutions Fund (CDFI Fund) is to increase economic opportunity and promote community development investments for underserved populations in distressed communities in the United States. Its long-term vision is to economically empower America's underserved and distressed communities. The purpose of the Community Development Financial Institutions Program (CDFI Program) is to promote economic revitalization and community development through investment in and assistance to Community Development Financial Institutions (CDFIs). Under the CDFI Program, the CDFI Fund provides financial assistance in the form of grants, loans, equity investments and deposits to CDFIs selected through a merit-based application process. The CDFI Fund provides financial assistance to CDFIs to enhance their ability to make loans and investments, and to provide related services for the benefit of designated investment areas, targeted populations, or both. In addition, through the CDFI Program, the CDFI Fund provides technical assistance grants to CDFIs and entities that propose to become CDFIs, for the purpose of increasing their capacity to serve their target markets.

The CDFI Fund is amending its regulations regarding the financial reporting requirements for non-profit organizations. The regulatory change requires CDFI Program awardees that are non-profit organizations to provide audited financial statements within 180 days after the end of the awardee's fiscal year end. This regulatory action conforms to the financial reporting requirements for non-profit awardees to the statutory provisions governing the CDFI Program.

DATES: *Effective date:* October 31, 2013. *Comment due date:* December 30, 2013.

ADDRESSES: All comments concerning this interim rule should be addressed to the CDFI Program Manager, Community Development Financial Institutions Fund, Department of the Treasury, 1500 Pennsylvania Avenue NW., Washington DC 20220; by email to; by email to *cdfihelp@cdfi.treas.gov;* or by facsimile at (202) 453–2466.

Electronic Submission of Comments: Interested persons are encouraged to submit comments electronically through the Federal eRulemaking Portal at *http://www.regulations.gov*. Electronic submission of comments allows the commenter maximum time to prepare and submit a comment, ensures timely receipt, and enables the Department to make them available to the public. Comments submitted electronically through the *http://www.regulations.gov* Web site can be viewed by other commenters and interested members of the public. Commenters should follow the instructions provided on that site to submit comments electronically.

All properly submitted comments will be available for inspection and downloading at *http://www.regulations.gov*. In general, comments received, including attachments and other supporting materials, are part of the public record and are available to the public. Do not submit any information in your comment or supporting materials that you consider confidential or inappropriate for public disclosure.

FOR FURTHER INFORMATION CONTACT: Adam Martinez, Program Manager, CDFI Program, by mail to the CDFI Fund, Department of the Treasury, 1500 Pennsylvania Avenue NW., Washington DC 20220; by email to *cdfihelp@cdfi.treas.gov;* or by facsimile at (202) 453–2466 (This is not a toll free number).

SUPPLEMENTARY INFORMATION:

Background

The CDFI Fund was established as a wholly owned government corporation by the Community Development Banking and Financial Institutions Act of 1994, as amended (12 U.S.C. 4701 *et seq.)* (the Act). Subsequent legislation placed the CDFI Fund within the Department of the Treasury and gave the Secretary of the Treasury all powers and rights of the Administrator of the CDFI Fund as set forth in the Act.

The CDFI Fund's programs are designed to facilitate the flow of lending and investment capital to distressed communities and to individuals who have been unable to take full advantage of the financial services industry. Access to credit, investment capital, and financial services are essential ingredients for creating and retaining jobs, developing affordable housing,

revitalizing neighborhoods, unleashing the economic potential of small businesses, and empowering people.

The CDFI Fund was established to promote economic revitalization and community development through, among other things, investment in and assistance to CDFIs, which specialize in serving underserved markets and the people who live there. CDFIs—while highly effective—are typically small in scale and often have difficulty raising the capital needed to meet the demands for their products and services. Through the CDFI Program, the CDFI Fund provides CDFIs with financial assistance in the form of grants, loans, equity investments, and deposits in order to enhance their ability to make loans and investments, and provide services for the benefit of designated investment areas, targeted populations or both. Additionally, many CDFIs are in formation or in the early stages of development in many markets underserved by traditional financial institutions, including rural and Native American communities. The CDFI Program assists such entities—as well as established CDFIs—by providing grants through which they may acquire technical assistance to build their capacity to serve their target markets. Applicants participate in the CDFI Program through a merit-based qualitative application and selection process in which the CDFI Fund makes funding decisions based on pre-established evaluation criteria. An entity generally receives financial assistance monies from the CDFI Fund only after being certified as a CDFI and entering into an assistance agreement with the CDFI Fund. These assistance agreements include performance goals, matching funds requirements and reporting requirements.

On December 13, 2005, the CDFI Fund published in the **Federal Register** a revised interim rule (*70 FR 73887*) implementing the CDFI Program (the current rule).

Current Financial Reporting Requirements for Non-Profit Organizations

Part 1805 of the CDFI Fund regulations (12 CFR part 1805) sets forth the requirements under the Act for Data Collection and Reporting by CDFI Program awardees. Section 1805.804(e)(1) (12 CFR 1805.804(e)(1)) states that all non-profit organizations must submit to the CDFI Fund financial statements that have been reviewed by an independent certified public accountant in accordance with standards issued by the American Institute of Certified Public Accountants, no later than 180 days after the end of the Awardee's fiscal year; and that audited financial statements can be provided by the due date in lieu of reviewed statements, if available.

Statutory Financial Reporting Requirements for CDFI Program Awardees

The Act requires the CDFI Fund to ensure that each CDFI Program awardee (other than an insured CDFI or depository institution holding company) submit, not less than once during each 18-month period, a statement of financial condition audited by an independent certified public accountant as part of the awardee's annual report to the CDFI Fund required by section 4714(e)(1) of the Act.

Conforming CDFI Program Regulations to the Act

The CDFI Program Regulations currently permit non-profit CDFI awardees to submit financial statements that are reviewed but not audited by independent certified public accounts as part of their annual report to the CDFI Fund. This was done in part out of a recognition of the cost and time constraints non-profit awardees face in obtaining audited financial statements within the allotted 180-day period following the end of their fiscal year. The CDFI Fund is issuing this interim rule to conform the regulatory reporting requirements to the requirements of the Act.

Regulatory Analysis and Notices

Executive Order 12866

It has been determined that this final rule is not a significant regulatory action as defined in Executive Order 12866. Therefore, a regulatory assessment is not required.

Regulatory Flexibility Act

Because no notice of proposed rulemaking is required under the Administrative Procedure Act (5 U.S.C. 553) or any other law, the Regulatory Flexibility Act does not apply.

Paperwork Reduction Act

The collections of information contained in this interim rule have been previously reviewed and approved by the Office of Management and Budget (OMB) in accordance with the Paperwork Reduction Act of 1995 and assigned OMB Control Numbers 1559–0006, 1559–0021, and 1559–0022. An agency may not conduct or sponsor, and a person is not required to respond to, a collection of information unless it displays a valid control number assigned by OMB. This document restates the collections of information without substantive change.

National Environmental Policy Act

This interim rule has been reviewed in accordance with 12 CFR part 1815. The CDFI Fund's Environmental Regulations under the National Environmental Protection Act of 1969 (NEPA) require that the CDFI Fund adequately consider the cumulative impact proposed activities have upon the human environment. It is the determination of the CDFI Fund that the interim rule does not constitute a major federal action significantly affecting the quality of the human environment and, in accordance with the NEPA and the CDFI Fund Environmental Quality Regulations, 12 CFR part 1815, neither an Environmental Assessment nor an Environmental Impact Statement is required.

Administrative Procedure Act

Because this interim rule relates to loans and grants, notice and public procedure and a delayed effective date are not required pursuant to the Administrative Procedure Act, 5 U.S.C. 553(a)(2).

Catalogue of Federal Domestic Assistance Number

Community Development Financial Institutions Program—21.020.

List of Subjects in 12 CFR Part 1805

Community development, Grant programs—housing and community development, Loan programs—housing and community development, Reporting and recordkeeping requirements, Small businesses.

Amendment to the Regulations

For the reasons discussed in the preamble, the CDFI Fund is amending 12 CFR part 1805 as follows:

PART 1805—COMMUNITY DEVELOPMENT FINANCIAL INSTITUTIONS PROGRAM

■ 1. The authority citation for part 1805 continues to read as follows:

Authority: 12 U.S.C. 4703, 4703 note, 4710, 4717; and 31 U.S.C. 321.

■ 2. In § 1805.804, paragraph (e)(1)(i) is revised to read as follows:

§ 1805.804 Data collection and reporting.

* * * * *

(e) * * *

(1) * * *

(i) All non-profit organizations (excluding Insured CDFIs and State-Insured Credit Unions) must submit to

the CDFI Fund financial statements that have been audited by an independent certified public accountant in accordance with generally accepted auditing standards as promulgated by the American Institute of Certified Public Accountants, no later than 180 days after the end of the Awardee's fiscal year. Non-profit organizations (excluding Insured CDFIs and State-Insured Credit Unions) that are required to have their financial statements audited pursuant to OMB Circular A–133 *Audits of States, Local Governments and Non-Profit Organizations,* must also submit their A–133 audited financial statements to the CDFI Fund no later than 270 days after the end of the Awardee's fiscal year. Non-profit organizations (excluding Insured CDFIs and State-Insured Credit Unions) that are not required to have financial statements audited pursuant to OMB Circular A–133, *Audits of States, Local Governments and Non-Profit Organizations,* must submit to the CDFI Fund a statement signed by the Awardee's Authorized Representative or certified public accountant, asserting that the Awardee is not required to have a single audit pursuant OMB Circular A–133.

* * * * *

Dated: October 24, 2013.

Donna J. Gambrell,

Director, Community Development Financial Institutions Fund.

[FR Doc. 2013–25872 Filed 10–30–13; 8:45 am]

BILLING CODE 4810–70–P

DEPARTMENT OF TRANSPORTATION

Federal Aviation Administration

14 CFR Part 25

[Docket No. FAA–2013–0920; Special Conditions No. 25–13–12–SC]

Special Conditions: Learjet Model 45 Series Airplanes; Aircraft Electronic System Security Protection From Unauthorized External Access

AGENCY: Federal Aviation Administration (FAA), DOT.

ACTION: Final special condition; request for comments.

SUMMARY: These special conditions are issued for the Learjet Model 45 series airplanes. These airplanes will have a novel or unusual design feature associated with the architecture and connectivity capabilities of the airplanes' computer systems and networks. Connectivity to, or access by, external systems and networks may result in security vulnerabilities to the airplanes' systems. The applicable airworthiness regulations do not contain adequate or appropriate safety standards for this design feature. These special conditions contain the additional safety standards that the Administrator considers necessary to establish a level of safety equivalent to that established by the existing airworthiness standards.

DATES: The effective date of these special conditions is October 31, 2013. We must receive your comments by December 16, 2013.

ADDRESSES: Send comments identified by docket number FAA–2013–0920 using any of the following methods:

- *Federal eRegulations Portal:* Go to *http://www.regulations.gov/* and follow the online instructions for sending your comments electronically.

Mail: Send comments to Docket Operations, M–30, U.S. Department of Transportation (DOT), 1200 New Jersey Avenue SE, Room W12–140, West Building Ground Floor, Washington, DC, 20590–0001.

Hand Delivery or Courier: Take comments to Docket Operations in Room W12–140 of the West Building Ground Floor at 1200 New Jersey Avenue SE., Washington, DC, between 8 a.m. and 5 p.m., Monday through Friday, except federal holidays.

Fax: Fax comments to Docket Operations at 202–493–2251.

Privacy: The FAA will post all comments it receives, without change, to *http://www.regulations.gov/,* including any personal information the commenter provides. Using the search function of the docket Web site, anyone can find and read the electronic form of all comments received into any FAA docket, including the name of the individual sending the comment (or signing the comment for an association, business, labor union, etc.). DOT's complete Privacy Act Statement can be found in the **Federal Register** published on April 11, 2000 (65 FR 19477–19478), as well as at *http://DocketsInfo.dot.gov/.*

Docket: Background documents or comments received may be read at *http://www.regulations.gov/* at any time. Follow the online instructions for accessing the docket or go to the Docket Operations in Room W12–140 of the West Building Ground Floor at 1200 New Jersey Avenue SE., Washington, DC, between 9 a.m. and 5 p.m., Monday through Friday, except federal holidays.

FOR FURTHER INFORMATION CONTACT: Varun Khanna, FAA, Airplane and Flight Crew Interface Branch, ANM–111, Transport Airplane Directorate, Aircraft Certification Service, 1601 Lind Avenue SW., Renton, Washington 98057–3356; telephone 425–227–1298; facsimile 425–227–1149.

SUPPLEMENTARY INFORMATION: The FAA has determined that notice of, and opportunity for prior public comment on, these special conditions are impracticable because these procedures would significantly delay issuance of the design approval and thus delivery of the affected aircraft. The FAA has also determined that notice of these special conditions is unnecessary because the substance of these special conditions has been subject to the public comment process in several prior instances with no substantive comments received. The FAA therefore finds that good cause exists for making these special conditions effective upon publication in the **Federal Register**.

Comments Invited

We invite interested people to take part in this rulemaking by sending written comments, data, or views. The most helpful comments reference a specific portion of the special conditions, explain the reason for any recommended change, and include supporting data.

We will consider all comments we receive by the closing date for comments. We may change these special conditions based on the comments we receive.

Background

On April 21, 2010, Learjet applied for both a change to Type Certificate No. T00008WI and for a supplemental type certificate (STC) for an installation of an avionics upgrade in the Learjet Model 45 series airplanes. The Model 45 series airplanes are swept-wing aircraft equipped with two Honeywell TFE731–40BR turbojet engines, weighing 13,890 pounds empty and capable of carrying up to nine passengers and two crew members.

The proposed Learjet Model 45 avionics architecture is new and novel for commercial transport airplanes by allowing connection to airplane electronic systems and networks, and access from aircraft external sources (e.g., wireless devices, Internet connectivity) to the previously isolated airplane electronic assets.

Learjet's proposed design is considered by the FAA to be an architecture which introduces potential security risks and vulnerabilities not addressed in current regulations and aircraft-level or system-level safety assessment methods. Consequently, these special conditions address security and safety issues arising from the use of this type of architecture, and

foreseeable flight and maintenance applications impacted by these interconnected data networks and the addition of external access points.

Type Certification Basis

Under Title 14, Code of Federal Regulations (14 CFR) 21.17, Learjet must show that the Model 45 series meets the applicable provisions of 14 CFR part 25, as amended by Amendments 25–1 through 25–128.

If the Administrator finds that the applicable airworthiness regulations (i.e., 14 CFR part 25) do not contain adequate or appropriate safety standards for the Model 45 series because of a novel or unusual design feature, special conditions are prescribed under § 21.16.

Special conditions are initially applicable to the model for which they are issued. Should the type certificate for that model be amended later to include any other model that incorporates the same novel or unusual design feature, the proposed special conditions would also apply to the other model under § 21.101.

In addition to the applicable airworthiness regulations and proposed special conditions, the Learjet Model 45 series airplane must comply with the fuel vent and exhaust emission requirements of 14 CFR part 34 and the noise certification requirements of 14 CFR part 36 and the FAA must issue a finding of regulatory adequacy under § 611 of Public Law 92–574, the ''Noise Control Act of 1972.''

The FAA issues special conditions, as defined in 14 CFR 11.19, under § 11.38, and they become part of the type-certification basis under § 21.17(a)(2).

Novel or Unusual Design Features

The Learjet Model 45 series airplanes will incorporate the following novel or unusual design features: Digital systems architecture composed of several connected networks. The proposed architecture and network configuration may be used for, or interfaced with, a diverse set of functions, including:

1. Flight-safety related control, communication, display, monitoring, and navigation systems (aircraft control functions);
2. Operator business and administrative support (operator information services);
3. Passenger information and entertainment systems (passenger entertainment services); and,
4. The capability to allow access to or by systems external to the airplane.

Discussion

The architecture and network configuration in the Learjet Model 45 series airplanes may allow increased connectivity to, or access by, external airplane sources, airline operations, and maintenance systems to the aircraft control functions and airline information services. The aircraft control functions and airline information services perform functions required for the safe operation and maintenance of the airplane. Previously these functions and services had very limited connectivity with external sources. The architecture and network configuration may allow the exploitation of network security vulnerabilities resulting in intentional or unintentional destruction, disruption, degradation, or exploitation of data, systems, and networks critical to the safety and maintenance of the airplane. The existing regulations and guidance material did not anticipate these types of airplane system architectures. Furthermore, 14 CFR regulations and current system safety assessment policy and techniques do not address potential security vulnerabilities, which could be exploited by unauthorized access to airplane systems, data buses, and servers. Therefore, these special conditions are issued to ensure that the security (i.e., confidentiality, integrity, and availability) of airplane systems is not compromised by unauthorized wired or wireless electronic connections.

For the reasons discussed above, these special conditions contain the additional safety standards that the Administrator considers necessary to establish a level of safety equivalent to that established by the existing airworthiness standards.

Applicability

As discussed above, these special conditions are applicable to the Learjet Model 45 series airplanes. Should Learjet apply at a later date for a change to the type certificate to include another model incorporating the same novel or unusual design feature, the special conditions would apply to that model as well.

Conclusion

This action affects only certain novel or unusual design features on one model series of airplanes. It is not a rule of general applicability.

The substance of these special conditions has been subjected to the notice and comment period in several prior instances and has been derived without substantive change from those previously issued. It is unlikely that prior public comment would result in a significant change from the substance contained herein. Therefore, the FAA has determined that prior public notice and comment are unnecessary, and good cause exists for adopting these special conditions upon publication in the **Federal Register**. The FAA is requesting comments to allow interested persons to submit views that may not have been submitted in response to the prior opportunities for comment described above.

List of Subjects in 14 CFR Part 25

Aircraft, Aviation safety, Reporting and recordkeeping requirements.

The authority citation for these special conditions is as follows:

Authority: 49 U.S.C. 106(g), 40113, 44701, 44702, 44704.

The Special Conditions

Accordingly, pursuant to the authority delegated to me by the Administrator, the following special conditions are issued as part of the type certification basis for Learjet Model 45 series airplanes.

System Security Protection for Aircraft Control Domain and Airline Information Services Domain From External Access

1. The applicant must ensure airplane electronic system security protection from access by unauthorized sources external to the airplane, including those possibly caused by maintenance activity.

2. The applicant must ensure that electronic system security threats are identified and assessed, and that effective electronic system security protection strategies are implemented to protect the airplane from all adverse impacts on safety, functionality, and continued airworthiness.

3. The applicant must establish appropriate procedures to allow the operator to ensure that continued airworthiness of the aircraft is maintained, including all post-type-certification modifications that may have an impact on the approved electronic system security safeguards.

Issued in Renton, Washington, on October 22, 2013.

Stephen P. Boyd,

Acting Manager, Transport Airplane Directorate, Aircraft Certification Service.

[FR Doc. 2013–25846 Filed 10–30–13; 8:45 am]

BILLING CODE 4910–13–P

DEPARTMENT OF TRANSPORTATION

Federal Aviation Administration

14 CFR Part 25

[Docket No. FAA–2013–0919; Special Conditions No. 25–13–11–SC]

Special Conditions: Learjet Model 45 Series Airplanes; Isolation or Security Protection of the Aircraft Control Domain and the Airline Information Services Domain From the Passenger Services Domain

AGENCY: Federal Aviation Administration (FAA), DOT.

ACTION: Final special condition; request for comments.

SUMMARY: These special conditions are issued for the Learjet Model 45 series airplanes. These airplanes will have novel or unusual design features associated with connectivity of the passenger service computer systems to the airplane critical systems and data networks. The applicable airworthiness regulations do not contain adequate or appropriate safety standards for this design feature. These special conditions contain the additional safety standards that the Administrator considers necessary to establish a level of safety equivalent to that established by the existing airworthiness standards.

DATES: The effective date of these special conditions is October 31, 2013. We must receive your comments by December 16, 2013.

ADDRESSES: Send comments identified by docket number FAA–2013–0919 using any of the following methods:

- *Federal eRegulations Portal:* Go to *http://www.regulations.gov/* and follow the online instructions for sending your comments electronically.

Mail: Send comments to Docket Operations, M–30, U.S. Department of Transportation (DOT), 1200 New Jersey Avenue SE., Room W12–140, West Building Ground Floor, Washington, DC 20590–0001.

Hand Delivery or Courier: Take comments to Docket Operations in Room W12–140 of the West Building Ground Floor at 1200 New Jersey Avenue SE., Washington, DC, between 9 a.m. and 5 p.m., Monday through Friday, except federal holidays.

Fax: Fax comments to Docket Operations at 202–493–2251.

Privacy: The FAA will post all comments it receives, without change, to *http://www.regulations.gov/*, including any personal information the commenter provides. Using the search function of the docket Web site, anyone can find and read the electronic form of all comments received into any FAA docket, including the name of the individual sending the comment (or signing the comment for an association, business, labor union, etc.). DOT's complete Privacy Act Statement can be found in the **Federal Register** published on April 11, 2000 (65 FR 19477–19478), as well as at *http://DocketsInfo.dot.gov/*.

Docket: Background documents or comments received may be read at *http://www.regulations.gov/* at any time. Follow the online instructions for accessing the docket or go to the Docket Operations in Room W12–140 of the West Building Ground Floor at 1200 New Jersey Avenue SE., Washington, DC, between 9 a.m. and 5 p.m., Monday through Friday, except federal holidays.

FOR FURTHER INFORMATION CONTACT: Varun Khanna, FAA, Airplane and Flight Crew Interface Branch, ANM–111, Transport Airplane Directorate, Aircraft Certification Service, 1601 Lind Avenue SW., Renton, Washington 98057–3356; telephone 425–227–1298; facsimile 425–227–1149.

SUPPLEMENTARY INFORMATION: The FAA has determined that notice of, and opportunity for prior public comment on, these special conditions are impracticable because these procedures would significantly delay issuance of the design approval and thus delivery of the affected aircraft. In addition, the substance of these special conditions has been subject to the public comment process in several prior instances with no substantive comments received. The FAA therefore finds that good cause exists for making these special conditions effective upon publication in the **Federal Register**.

Comments Invited

We invite interested people to take part in this rulemaking by sending written comments, data, or views. The most helpful comments reference a specific portion of the special conditions, explain the reason for any recommended change, and include supporting data.

We will consider all comments we receive by the closing date for comments. We may change these special conditions based on the comments we receive.

Background

On April 21, 2010, Learjet applied for both a change to Type Certificate No. T00008WI and for a supplemental type certificate (STC) change in the digital systems architecture in the Learjet Model 45 series airplanes. The Learjet Model No. 45 series airplanes are a swept-wing aircraft equipped with two Honeywell TFE731–40BR turbojet engines, weighing 13,890 pounds empty and capable of carrying up to nine passengers plus two crew members.

The proposed Learjet Model 45 architecture is new and novel for commercial transport airplanes by allowing connection to previously isolated data networks connected to systems that perform functions required for the safe operation of the airplane. This proposed data network and design integration may result in security vulnerabilities from intentional or unintentional corruption of data and systems critical to the safety and maintenance of the airplane. The existing regulations and guidance material did not anticipate this type of system architecture or electronic access to aircraft systems. Furthermore, regulations and current system safety assessment policy and techniques do not address potential security vulnerabilities, which could be caused by unauthorized access to aircraft data buses and servers. The intent of these special conditions is to ensure that security, integrity, and availability of aircraft systems are not compromised by certain wired or wireless electronic connections between airplane data busses and networks. A separate Learjet Model 45 project special condition addresses aircraft electronic system security protection from unauthorized external access.

Type Certification Basis

Under Title 14, Code of Federal Regulations (14 CFR) 21.17, Learjet must show that the Model 45 series meets the applicable provisions of 14 CFR part 25, as amended by Amendments 25–1 through 25–128.

If the Administrator finds that the applicable airworthiness regulations (i.e., 14 CFR part 25) do not contain adequate or appropriate safety standards for the Model 45 series because of a novel or unusual design feature, special conditions are prescribed under § 21.16.

Special conditions are initially applicable to the model for which they are issued. Should the type certificate for that model be amended later to include any other model that incorporates the same novel or unusual design feature, the proposed special conditions would also apply to the other model under § 21.101.

In addition to the applicable airworthiness regulations and proposed special conditions, the Learjet Model 45 series airplane must comply with the fuel vent and exhaust emission requirements of 14 CFR part 34 and the noise certification requirements of 14

CFR part 36 and the FAA must issue a finding of regulatory adequacy under § 611 of Public Law 92–574, the ''Noise Control Act of 1972.''

The FAA issues special conditions, as defined in 14 CFR 11.19, under § 11.38, and they become part of the type-certification basis under § 21.17(a)(2).

Novel or Unusual Design Features

The Learjet Model 45 series airplanes will incorporate the following novel or unusual design features: The proposed architecture and network configuration may be used for, or interfaced with, a diverse set of functions, including:

1. Flight-safety related control, communication, and navigation systems (aircraft control domain);
2. Operator business and administrative support (operator information domain); and
3. Passenger information and entertainment systems (passenger entertainment domain).

In addition, the operating systems (OS) for current aircraft systems are usually and historically proprietary. Therefore, they are not as susceptible to corruption from worms, viruses, and other malicious actions as more widely used commercial operating systems, such as Microsoft Windows NT, because access to the design details of these proprietary OS is limited to the system developer and aircraft integrator. Some systems installed on the Learjet Model 45 series airplanes will use operating systems that are widely used and commercially available from third party software suppliers. The security vulnerabilities of these operating systems may be more widely known than proprietary operating systems currently used by avionics manufacturers.

Discussion

The integrated network configurations in the Learjet Model 45 series airplanes may allow increased connectivity with external network sources and will have more interconnected networks and systems, such as passenger entertainment and information services than previous airplane models. This may allow the exploitation of network security vulnerabilities and increased risks potentially resulting in unsafe conditions for the airplanes and occupants. This potential exploitation of security vulnerabilities may result in intentional or unintentional destruction, disruption, degradation, or exploitation of data and systems critical to the safety and maintenance of the airplane. The existing regulations and guidance material did not anticipate these types of system architectures. Furthermore, 14 CFR regulations and current system safety assessment policy and techniques do not address potential security vulnerabilities which could be exploited by unauthorized access to airplane networks and servers. Therefore, these special conditions are being issued to ensure that the security (i.e., confidentiality, integrity, and availability) of airplane systems is not compromised by unauthorized wired or wireless electronic connections between airplane systems and the passenger entertainment services.

For the reasons discussed above, these special conditions contain the additional safety standards that the Administrator considers necessary to establish a level of safety equivalent to that established by the existing airworthiness standards.

Applicability

As discussed above, these special conditions are applicable to the Learjet Model 45 series airplanes. Should Learjet apply at a later date for a change to the type certificate to include another model incorporating the same novel or unusual design feature, the special conditions would apply to that model as well.

Conclusion

This action affects only certain novel or unusual design features on one model series of airplanes. It is not a rule of general applicability.

The substance of these special conditions has been subjected to the notice and comment period in several prior instances and has been derived without substantive change from those previously issued. It is unlikely that prior public comment would result in a significant change from the substance contained herein. Therefore, because a delay would significantly affect the certification of the airplane, which is imminent, the FAA has determined that prior public notice and comment are unnecessary and impracticable, and good cause exists for adopting these special conditions upon publication in the **Federal Register**. The FAA is requesting comments to allow interested persons to submit views that may not have been submitted in response to the prior opportunities for comment described above.

List of Subjects in 14 CFR Part 25

Aircraft, Aviation safety, Reporting and recordkeeping requirements.

The authority citation for these special conditions is as follows:

Authority: 49 U.S.C. 106(g), 40113, 44701, 44702, 44704.

The Special Conditions

Accordingly, pursuant to the authority delegated to me by the Administrator, the following special conditions are issued as part of the type certification basis for Learjet Model 45 series airplanes.

Isolation or Security Protection of the Aircraft Control Domain and the Airline Information Services Domain From the Passenger Services Domain

1. The applicant must ensure that the design provides isolation from, or airplane electronic system security protection against, access by unauthorized sources internal to the airplane. The design must prevent inadvertent and malicious changes to, and all adverse impacts upon, airplane equipment, systems, networks, or other assets required for safe flight and operations.

2. The applicant must establish appropriate procedures to allow the operator to ensure that continued airworthiness of the aircraft is maintained, including all post-type-certification modifications that may have an impact on the approved electronic system security safeguards.

Issued in Renton, Washington, on October 22, 2013.

Stephen P. Boyd,

Acting Manager, Transport Airplane Directorate, Aircraft Certification Service.

[FR Doc. 2013–25851 Filed 10–30–13; 8:45 am]

BILLING CODE 4910–13–P

DEPARTMENT OF TRANSPORTATION

Federal Aviation Administration

14 CFR Part 25

[Docket No. FAA–2013–0820; Notice No. 25–499–SC]

Special Conditions: Bombardier Inc., Models BD–500–1A10 and BD–500–1A11 Series Airplanes; Interactions of Systems and Structures

AGENCY: Federal Aviation Administration (FAA), DOT.

ACTION: Final special conditions; request for comments.

SUMMARY: These special conditions are issued for the Bombardier Inc. Models BD–500–1A10 and BD–500–1A11 series airplanes. These airplanes will have novel or unusual features when compared to the state of technology envisioned in the airworthiness standards for transport category airplanes. These design features include systems that, directly or as a result of

failure or malfunction, affect structural performance. The applicable airworthiness regulations do not contain adequate or appropriate safety standards for these design features. These special conditions contain the additional safety standards that the Administrator considers necessary to establish a level of safety equivalent to that established by the existing airworthiness standards.

DATES: The effective date of these special conditions is October 31, 2013. We must receive your comments by December 16, 2013.

ADDRESSES: Send comments identified by docket number FAA–2013–0820 using any of the following methods:

- *Federal eRegulations Portal:* Go to *http://www.regulations.gov/* and follow the online instructions for sending your comments electronically.
- *Mail:* Send comments to Docket Operations, M–30, U.S. Department of Transportation (DOT), 1200 New Jersey Avenue SE., Room W12–140, West Building Ground Floor, Washington, DC 20590–0001.
- *Hand Delivery or Courier:* Take comments to Docket Operations in Room W12–140 of the West Building Ground Floor at 1200 New Jersey Avenue SE., Washington, DC, between 9 a.m. and 5 p.m., Monday through Friday, except federal holidays.
- *Fax:* Fax comments to Docket Operations at 202–493–2251.

Privacy: The FAA will post all comments it receives, without change, to *http://www.regulations.gov/,* including any personal information the commenter provides. Using the search function of the docket Web site, anyone can find and read the electronic form of all comments received into any FAA docket, including the name of the individual sending the comment (or signing the comment for an association, business, labor union, etc.). DOT's complete Privacy Act Statement can be found in the **Federal Register** published on April 11, 2000 (65 FR 19477–19478), as well as at *http://DocketsInfo .dot.gov/.*

Docket: Background documents or comments received may be read at *http://www.regulations.gov/* at any time. Follow the online instructions for accessing the docket or go to the Docket Operations in Room W12–140 of the West Building Ground Floor at 1200 New Jersey Avenue SE., Washington, DC, between 9 a.m. and 5 p.m., Monday through Friday, except federal holidays.

FOR FURTHER INFORMATION CONTACT: Mark Freisthler, FAA, Airframe and Cabin Safety Branch, ANM–115, Transport Airplane Directorate, Aircraft Certification Service, 1601 Lind Avenue SW., Renton, Washington 98057–3356; telephone 425–227–1119; facsimile 425–227–1232.

SUPPLEMENTARY INFORMATION: The FAA has determined that notice of, and opportunity for prior public comment on, these special conditions is impracticable because these procedures would significantly delay issuance of the design approval and thus delivery of the affected aircraft. In addition, the substance of these special conditions has been subject to the public comment process in several prior instances with no substantive comments received. The FAA therefore finds that good cause exists for making these special conditions effective upon issuance.

Comments Invited

We invite interested people to take part in this rulemaking by sending written comments, data, or views. The most helpful comments reference a specific portion of the special conditions, explain the reason for any recommended change, and include supporting data.

We will consider all comments we receive on or before the closing date for comments. We may change these special conditions based on the comments we receive.

Background

On December 10, 2009, Bombardier Inc. applied for a type certificate for their new Models BD–500–1A10 and BD–500–1A11 series airplanes. The Models BD–500–1A10 and BD–500–1A11 series airplanes are swept-wing monoplanes with a pressurized cabin, and they share an identical supplier base and significant common design elements. The fuselage is aluminum alloy material, blended double-bubble design, sized for nominal 5-abreast seating. Each airplane's powerplant includes two under-wing Pratt and Whitney PW1524G ultra high-bypass, geared turbofan engines. Flight controls are fly-by-wire systems with two passive/uncoupled side sticks. Avionics include five landscape primary cockpit displays. The dimensions of the airplanes encompass a wingspan of 115 feet; a height of 37.75 feet; and a length of 114.75 feet for the Model BD–500–1A10 and 127 feet for the Model BD–500–1A11. Passenger capacity is designated as 110 for the Model BD–500–1A10 and 125 for the Model BD–500–1A11. Maximum takeoff weight is 131,000 pounds for the Model BD–500–1A10 and 144,000 pounds for the Model BD–500–1A11. Maximum takeoff thrust is 21,000 pounds for the Model BD–500–1A10 and 23,300 pounds for the Model BD–500–1A11. The range is 3,394 miles (5,463 kilometres) for both models of airplanes. The maximum operating altitude is 41,000 feet for both models of airplanes.

Type Certification Basis

Under the provisions of Title 14, Code of Federal Regulations (14 CFR) 21.17, Bombardier Inc. must show that the Model BD–500–1A10 and BD–500–1A11 series airplanes meet the applicable provisions of 14 CFR part 25 as amended by Amendments 25–1 through 25–129 thereto.

If the Administrator finds that the applicable airworthiness regulations (i.e., 14 CFR part 25) do not contain adequate or appropriate safety standards for the Models BD–500–1A10 and BD–500–1A11 series airplanes because of a novel or unusual design feature, special conditions are prescribed under the provisions of § 21.16.

Special conditions are initially applicable to the model for which they are issued. Should the type certificate for that model be amended later to include any other model that incorporates the same or similar novel or unusual design feature, the special conditions would also apply to the other model.

In addition to the applicable airworthiness regulations and special conditions, the Model BD–500–1A10 and BD–500–1A11 series airplanes must comply with the fuel vent and exhaust emission requirements of 14 CFR part 34 and the noise certification requirements of 14 CFR part 36, and the FAA must issue a finding of regulatory adequacy under § 611 of Public Law 92–574, the ''Noise Control Act of 1972.''

The FAA issues special conditions, as defined in 14 CFR 11.19, in accordance with § 11.38, and they become part of the type-certification basis under § 21.17(a)(2).

Novel or Unusual Design Features

The Models BD–500–1A10 and BD–500–1A11 series airplanes will incorporate the following novel or unusual design features: Systems that affect the airplane's structural performance, either directly or as a result of failure or malfunction. That is, the airplane's systems affect how it responds in maneuver and gust conditions, and thereby affect its structural capability. These systems may also affect the aeroelastic stability of the airplane. Such systems include flight control systems, autopilots, stability augmentation systems, load alleviation systems, and fuel management systems. These systems represent novel and unusual features when compared to the

technology envisioned in the current airworthiness standards.

Discussion

The flight control system of the Models BD–500–1A10 and BD–500–1A11 series airplanes will consist of a full authority fly-by-wire system with normal and direct modes of operation. Special conditions have been applied on past airplane programs, with similar systems, in order to require consideration of the effects of those systems on structures. The regulatory authorities and industry developed standardized criteria in the Aviation Rulemaking Advisory Committee (ARAC) forum based on the criteria defined in Advisory Circular 25.672, dated November 11, 1983. The ARAC recommendations have been incorporated in European Aviation Safety Agency (EASA) Certification Specifications (CS) 25.302 and CS–25 Appendix K. FAA rulemaking on this subject is not complete, thus the need for special conditions.

These special conditions are similar to those previously applied to other airplane models and to EASA CS 25.302. Transport Canada Civil Aviation (TCCA) plans to apply the CS 25.302 version of the special conditions. The differences between FAA special conditions and the current CS 25.302, which the FAA regards as minor, are shown below.

(1) Both these special conditions and CS 25.302 specify the design load conditions to be considered. Paragraphs 2a(1) and 2b(2)(i) of these special conditions clarify that, in some cases, different load conditions are to be considered due to other special conditions or equivalent level of safety findings.

(2) Both these special conditions and CS 25.302 allow consideration of the probability of being in a dispatched configuration when assessing subsequent failures and potential ''continuation of flight'' loads (see paragraph 2d below). These special conditions, however, also allow using probability when assessing failures that induce loads at the ''time of occurrence,'' whereas CS 25.302 does not. The FAA provision is relieving. The FAA chooses to preserve these minor differences and go forward with this version of the special conditions.

Applicability

As discussed above, these special conditions are applicable to the Models BD–500–1A10 and BD–500–1A11 series airplanes. Should Bombardier Inc. apply at a later date for a change to the type certificate to include another model incorporating the same novel or unusual design feature, the special conditions would apply to that model as well.

Conclusion

This action affects only certain novel or unusual design features on two models of airplanes. It is not a rule of general applicability.

The substance of these special conditions has been subjected to the notice and comment period in several prior instances and has been derived without substantive change from those previously issued. It is unlikely that prior public comment would result in a significant change from the substance contained herein. Therefore, because a delay would significantly affect the certification of the airplane, which is imminent, the FAA has determined that prior public notice and comment are unnecessary and impracticable, and good cause exists for adopting these special conditions upon publication in the **Federal Register**. The FAA is requesting comments to allow interested persons to submit views that may not have been submitted in response to the prior opportunities for comment described above.

List of Subjects in 14 CFR Part 25

Aircraft, Aviation safety, Reporting and recordkeeping requirements.

The authority citation for these special conditions is as follows:

Authority: 49 U.S.C. 106(g), 40113, 44701, 44702, 44704.

The Special Conditions

Accordingly, pursuant to the authority delegated to me by the Administrator, the following special conditions are issued as part of the type certification basis for Bombardier Inc. Models BD–500–1A10 and BD–500–1A11 series airplanes.

1. *Interaction of Systems and Structures. General.*

a. For airplanes equipped with systems that affect structural performance, either directly or as a result of a failure or malfunction, the influence of these systems and their failure conditions must be taken into account when showing compliance with the requirements of Title 14, Code of Federal Regulations (14 CFR) part 25 subparts C and D.

b. The following criteria must be used for showing compliance with these special conditions for airplanes equipped with flight control systems, autopilots, stability augmentation systems, load alleviation systems, flutter control systems, fuel management systems, and other systems that either directly or as a result of failure or malfunction affect structural performance. If these special conditions are used for other systems, it may be necessary to adapt the criteria to the specific system.

c. The criteria defined herein only address the direct structural consequences of the system responses and performances and cannot be considered in isolation but should be included in the overall safety evaluation of the airplane. These criteria may in some instances duplicate standards already established for this evaluation. These criteria are only applicable to structure whose failure could prevent continued safe flight and landing. Specific criteria that define acceptable limits on handling characteristics or stability requirements when operating in the system degraded or inoperative mode are not provided in these special conditions.

d. Depending upon the specific characteristics of the airplane, additional studies may be required that go beyond the criteria provided in these special conditions in order to demonstrate the capability of the airplanes to meet other realistic conditions such as alternative gust or maneuver descriptions for an airplane equipped with a load alleviation system.

e. The following definitions are applicable to these special conditions:

(1) Structural performance: Capability of the airplane to meet the structural requirements of 14 CFR part 25.

(2) Flight limitations: Limitations that can be applied to the airplane flight conditions following an in-flight occurrence and that are included in the flight manual (e.g., speed limitations and avoidance of severe weather conditions).

(3) Operational limitations: Limitations, including flight limitations, that can be applied to the airplane operating conditions before dispatch (e.g., fuel, payload and Master Minimum Equipment List limitations).

(4) Probabilistic terms: The probabilistic terms (probable, improbable, extremely improbable) used in these special conditions are the same as those used in § 25.1309.

(5) Failure condition: The term ''failure condition'' is the same as that used in § 25.1309. However, these special conditions apply only to system failure conditions that affect the structural performance of the airplane (e.g., system failure conditions that induce loads, change the response of the airplane to inputs such as gusts or pilot actions, or lower flutter margins).

2. *Effect on Systems and Structures.* The following criteria will be used in determining the influence of a system

and its failure conditions on the airplane structure.

a. System fully operative. With the system fully operative, the following apply:

(1) Limit loads must be derived in all normal operating configurations of the system from all the limit conditions specified in subpart C (or defined by special conditions or equivalent level of safety in lieu of those specified in subpart C), taking into account any special behavior of such a system or associated functions or any effect on the structural performance of the airplane that may occur up to the limit loads. In particular, any significant nonlinearity (rate of displacement of control surface, thresholds, or any other system nonlinearities) must be accounted for in a realistic or conservative way when deriving limit loads from limit conditions.

(2) The airplane must meet the strength requirements of part 25 (static strength, residual strength) using the specified factors to derive ultimate loads from the limit loads defined above. The effect of nonlinearities must be investigated beyond limit conditions to ensure the behavior of the system presents no anomaly compared to the behavior below limit conditions. However, conditions beyond limit conditions need not be considered when it can be shown that the airplane has design features that will not allow it to exceed those limit conditions.

(3) The airplane must meet the aeroelastic stability requirements of § 25.629.

b. System in the failure condition. For any system failure condition not shown to be extremely improbable, the following apply:

(1) At the time of occurrence. Starting from 1-g level flight conditions, a realistic scenario, including pilot corrective actions, must be established to determine the loads occurring at the time of failure and immediately after failure.

(i) For static strength substantiation, these loads, multiplied by an appropriate factor of safety that is related to the probability of occurrence of the failure, are ultimate loads to be considered for design. The factor of safety (FS) is defined in Figure 1.

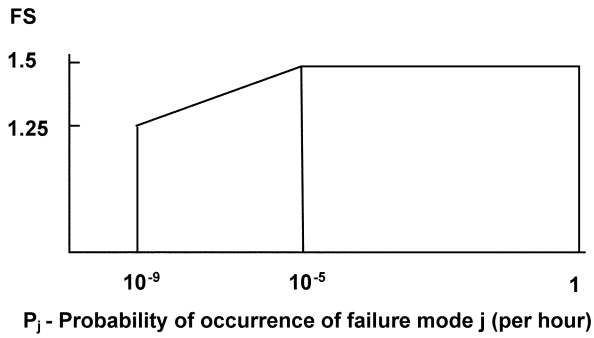

Figure 1. Factor of safety at the time of occurrence.

(ii) For residual strength substantiation, the airplane must be able to withstand two thirds of the ultimate loads defined in subparagraph 2b(1)(i). For pressurized cabins, these loads must be combined with the normal operating differential pressure.

(iii) Freedom from aeroelastic instability must be shown up to the speeds defined in § 25.629(b)(2). For failure conditions that result in speeds beyond V_C/M_C, freedom from aeroelastic instability must be shown to increased speeds, so that the margins intended by § 25.629(b)(2) are maintained.

(iv) Failures of the system that result in forced structural vibrations (e.g., oscillatory failures) must not produce loads that could result in detrimental deformation of primary structure.

(2) For the continuation of the flight. For the airplane, in the system-failed state and considering any appropriate reconfiguration and flight limitations, the following apply:

(i) The loads derived from the following conditions (or defined by special conditions or equivalent level of safety in lieu of the following conditions) at speeds up to V_C/M_C, or the speed limitation prescribed for the remainder of the flight, must be determined:

(A) The limit symmetrical maneuvering conditions specified in § 25.331 and in § 25.345.

(B) The limit gust and turbulence conditions specified in § 25.341 and in § 25.345.

(C) The limit rolling conditions specified in § 25.349 and the limit unsymmetrical conditions specified in § 25.367 and § 25.427(b) and (c).

(D) The limit yaw maneuvering conditions specified in § 25.351.

(E) The limit ground loading conditions specified in §§ 25.473, 25.491, 25.493(d) and 25.503.

(ii) For static strength substantiation, each part of the structure must be able to withstand the loads in paragraph 2b(2)(i) of these special conditions multiplied by a factor of safety depending on the probability of being in this failure state. The factor of safety (FS) is defined in Figure 2.

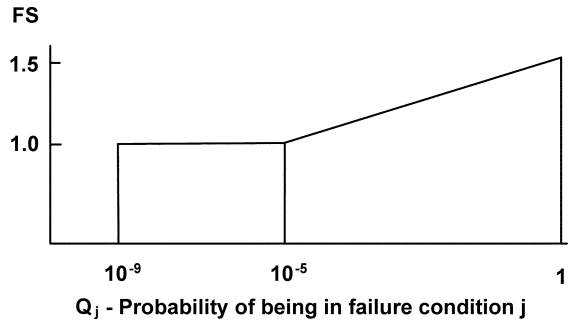

Figure 2. Factor of safety for continuation of flight.

$Q_j = (T_j)(P_j)$ where:
T_j = Average time spent in failure condition j (in hours)
P_j = Probability of occurrence of failure mode j (per hour)
Note: If P_j is greater than 10^{-3} per flight hour then a 1.5 factor of safety must be applied to all limit load conditions specified in subpart C.

(iii) For residual strength substantiation, the airplane must be able to withstand two thirds of the ultimate loads defined in paragraph 2b(2)(ii) of these special conditions. For pressurized cabins, these loads must be combined with the normal operating differential pressure.

(iv) If the loads induced by the failure condition have a significant effect on fatigue or damage tolerance, then their effects must be taken into account.

(v) Freedom from aeroelastic instability must be shown up to a speed determined from Figure 3. Flutter clearance speeds V′ and V″ may be based on the speed limitation specified for the remainder of the flight using the margins defined by § 25.629(b).

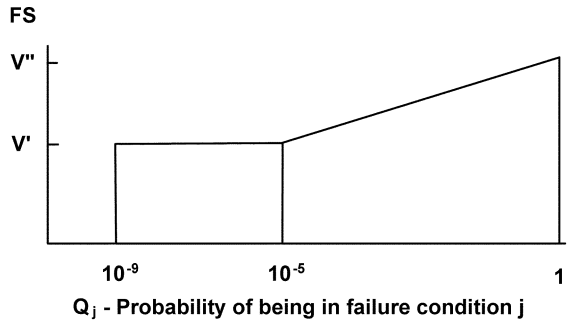

Figure 3: Clearance speed

V' = Clearance speed as defined by § 25.629(b)(2).
V" = Clearance speed as defined by § 25.629(b)(1).
$Q_j = (T_j)(P_j)$ where:
T_j = Average time spent in failure condition j (in hours)
P_j = Probability of occurrence of failure mode j (per hour)
Note: If P_j is greater than 10^{-3} per flight hour, then the flutter clearance speed must not be less than V".

(vi) Freedom from aeroelastic instability must also be shown up to V′ in Figure 3 above, for any probable system failure condition combined with any damage required or selected for investigation by § 25.571(b).

(3) Consideration of certain failure conditions may be required by other sections of 14 CFR part 25 regardless of calculated system reliability. Where analysis shows the probability of these failure conditions to be less than 10^{-9}, criteria other than those specified in this paragraph may be used for structural substantiation to show continued safe flight and landing.

c. Failure indications. For system failure detection and indication, the following apply:

(1) The system must be checked for failure conditions, not extremely improbable, that degrade the structural capability below the level required by part 25 or significantly reduce the

reliability of the remaining system. As far as reasonably practicable, the flight crew must be made aware of these failures before flight. Certain elements of the control system, such as mechanical and hydraulic components, may use special periodic inspections, and electronic components may use daily checks, in lieu of detection and indication systems to achieve the objective of this requirement. These certification maintenance requirements must be limited to components that are not readily detectable by normal detection and indication systems and where service history shows that inspections will provide an adequate level of safety.

(2) The existence of any failure condition, not extremely improbable, during flight that could significantly affect the structural capability of the airplane and for which the associated reduction in airworthiness can be minimized by suitable flight limitations, must be signaled to the flight crew. For example, failure conditions that result in a factor of safety between the airplane strength and the loads of subpart C below 1.25, or flutter margins below V″, must be signaled to the crew during flight.

d. Dispatch with known failure conditions. If the airplane is to be dispatched in a known system failure condition that affects structural performance, or affects the reliability of the remaining system to maintain structural performance, then the provisions of these special conditions must be met, including the provisions of paragraph 2a for the dispatched condition, and paragraph 2b for subsequent failures. Expected operational limitations may be taken into account in establishing P_j as the probability of failure occurrence for determining the safety margin in Figure 1. Flight limitations and expected operational limitations may be taken into account in establishing Q_j as the combined probability of being in the dispatched failure condition and the subsequent failure condition for the safety margins in Figures 2 and 3. These limitations must be such that the probability of being in this combined failure state and then subsequently encountering limit load conditions is extremely improbable. No reduction in these safety margins is allowed if the subsequent system failure rate is greater than 10^{-3} per hour.

Issued in Renton, Washington, on September 12, 2013.

Jeffrey E. Duven,

Acting Manager, Transport Airplane Directorate, Aircraft Certification Service.

[FR Doc. 2013–25448 Filed 10–30–13; 8:45 am]

BILLING CODE 4910–13–P

DEPARTMENT OF TRANSPORTATION

Federal Aviation Administration

14 CFR Part 39

[Docket No. FAA–2013–0518; Directorate Identifier 2009–SW–021–AD; Amendment 39–17607; AD 2013–20–01]

RIN 2120–AA64

Airworthiness Directives; Agusta S.p.A. (Type Certificate Currently Held by AgustaWestland S.p.A) (Agusta) Helicopters

AGENCY: Federal Aviation Administration (FAA), DOT.

ACTION: Final rule.

SUMMARY: We are adopting a new airworthiness directive (AD) for Agusta Model A109A, A109AII, and A109C helicopters with a certain third stage turbine wheel installed. This AD requires installing a placard on the instrument panel and revising the limitations section of the rotorcraft flight manual (RFM). This AD was prompted by several incidents of third stage engine turbine wheel failures, which were caused by excessive vibrations at certain engine speeds during steady-state operations. These actions are intended to alert pilots to avoid certain engine speeds during steady-state operations, prevent failure of the third stage engine turbine, engine power loss, and subsequent loss of control of the helicopter.

DATES: This AD is effective December 5, 2013.

The Director of the Federal Register approved the incorporation by reference of a certain document listed in this AD as of December 5, 2013.

ADDRESSES: For service information identified in this AD, contact Agusta Westland, Customer Support & Services, Via Per Tornavento 15, 21019 Somma Lombardo (VA) Italy, ATTN: Giovanni Cecchelli; telephone 39 0331 711133; fax 39 0331 711180; or at *http://www.agustawestland.com/technical-bullettins*. You may review the referenced service information at the FAA, Office of the Regional Counsel, Southwest Region, 2601 Meacham Blvd., Room 663, Fort Worth, Texas 76137.

Examining the AD Docket

You may examine the AD docket on the Internet at *http://www.regulations.gov* or in person at the Docket Operations Office between 9 a.m. and 5 p.m., Monday through Friday, except Federal holidays. The AD docket contains this AD, the foreign authority's AD, any incorporated-by-reference service information, the economic evaluation, any comments received, and other information. The street address for the Docket Operations Office (phone: 800–647–5527) is U.S. Department of Transportation, Docket Operations Office, M–30, West Building Ground Floor, Room W12–140, 1200 New Jersey Avenue SE., Washington, DC 20590.

FOR FURTHER INFORMATION CONTACT: Chinh Vuong, Aviation Safety Engineer, Safety Management Group, Rotorcraft Directorate, FAA, 2601 Meacham Blvd., Fort Worth, Texas 76137; telephone (817) 222–5110; email *chinh.vuong@faa.gov*.

SUPPLEMENTARY INFORMATION:

Discussion

On June 20, 2013, at 78 FR 37162, the **Federal Register** published our notice of proposed rulemaking (NPRM), which proposed to amend 14 CFR part 39 by adding an AD that would apply to Agusta Model A109A, A109AII, and A109C helicopters with a third stage turbine wheel, part number (P/N) 23065833, installed. The NPRM proposed to require installing a placard on the instrument panel adjacent to the engine and rotor RPM power turbine (N2) indicator and revising the Operating Limitations sections of the Model A109A, A109AII, and A109C RFMs to limit steady-state operations between speeds of 95% and 97%. The proposed requirements were intended to alert pilots to avoid certain engine speeds during steady-state operations, prevent failure of the third stage engine turbine, engine power loss, and subsequent loss of control of the helicopter.

The NPRM was prompted by AD No. 2009–0037–E, dated February 19, 2009, issued by the European Aviation Safety Agency (EASA), which is the Technical Agent for the Member States of the European Union. EASA issued AD No. 2009–0037–E to correct an unsafe condition for Agusta Model A109A, A109AII, and A109C helicopters with a Rolls Royce Corporation (RRC) engine Model 250–C20B or 250–C20R/1 having a third stage turbine wheel P/N 23065833 installed. EASA advises that following several third stage turbine wheel failures, the engine type

certificate holder, RRC, issued Commercial Engine Bulletin (CEB) A–1400 Revision 3, dated January 19, 2009 (CEB A–1400), to introduce an operational limitation on the power turbine (N2) speed range (95% to 97%) for more than 60 seconds in single or cumulative events for engines with the third stage turbine wheel P/N 23065833, installed.

The EASA AD requires amending the RFMs and installing a placard as described in Agusta Bollettino Tecnico No. 109–129, dated February 16, 2009 (BT 109–129). The EASA AD also states to avoid steady-state operation in the 95% to 97% N2 range for more than 60 seconds, and requires the corrective actions of CEB A–1400 if that limitation is exceeded.

Comments

We gave the public the opportunity to participate in developing this AD, but we did not receive any comments on the NPRM (78 FR 37162, June 20, 2013).

FAA's Determination

These helicopters have been approved by the aviation authority of Italy and are approved for operation in the United States. Pursuant to our bilateral agreement with Italy, EASA, its technical representative, has notified us of the unsafe condition described in the EASA AD. We are issuing this AD because we evaluated all information provided by EASA and determined the unsafe condition exists and is likely to exist or develop on other helicopters of these same type designs and that air safety and the public interest require adopting the AD requirements as proposed.

Related Service Information

Agusta has issued BT 109–129, which contains procedures for installing a placard on the instrument panel below or near the engine and rotor RPM power turbine (N2) indicator and for inserting the RFM changes into the flight manual.

Costs of Compliance

We estimate that this AD will affect 40 helicopters of U.S. Registry. Based on an average labor rate of $85 per hour, we estimate that operators will incur the following costs in order to comply with this AD. Amending the RFM will require about 0.25 work-hour, for a cost per helicopter of about $22 and a cost to U.S. operators of $880. Installing the decal will require about 0.2 work-hours, and required parts will cost about $5, for a cost per helicopter of $22 and a cost to U.S. operators of $880. Based on these estimates, the total cost of this AD will be $44 per helicopter and $1,760 for the U.S. operator fleet.

Authority for This Rulemaking

Title 49 of the United States Code specifies the FAA's authority to issue rules on aviation safety. Subtitle I, section 106, describes the authority of the FAA Administrator. Subtitle VII: Aviation Programs, describes in more detail the scope of the Agency's authority.

We are issuing this rulemaking under the authority described in Subtitle VII, Part A, Subpart III, Section 44701: ''General requirements.'' Under that section, Congress charges the FAA with promoting safe flight of civil aircraft in air commerce by prescribing regulations for practices, methods, and procedures the Administrator finds necessary for safety in air commerce. This regulation is within the scope of that authority because it addresses an unsafe condition that is likely to exist or develop on helicopters identified in this rulemaking action.

Regulatory Findings

This AD will not have federalism implications under Executive Order 13132. This AD will not have a substantial direct effect on the States, on the relationship between the national government and the States, or on the distribution of power and responsibilities among the various levels of government.

For the reasons discussed above, I certify that this AD:

(1) Is not a ''significant regulatory action'' under Executive Order 12866;

(2) Is not a ''significant rule'' under DOT Regulatory Policies and Procedures (44 FR 11034, February 26, 1979);

(3) Will not affect intrastate aviation in Alaska to the extent that it justifies making a regulatory distinction; and

(4) Will not have a significant economic impact, positive or negative, on a substantial number of small entities under the criteria of the Regulatory Flexibility Act.

We prepared an economic evaluation of the estimated costs to comply with this AD and placed it in the AD docket.

List of Subjects in 14 CFR Part 39

Air transportation, Aircraft, Aviation safety, Incorporation by reference, Safety.

Adoption of the Amendment

Accordingly, under the authority delegated to me by the Administrator, the FAA amends 14 CFR part 39 as follows:

PART 39—AIRWORTHINESS DIRECTIVES

■ 1. The authority citation for part 39 continues to read as follows:

Authority: 49 U.S.C. 106(g), 40113, 44701.

§ 39.13 [Amended]

■ 2. The FAA amends § 39.13 by adding the following new airworthiness directive (AD):

2013–20–01 Agusta S.p.A. (Type Certificate Currently Held By Agustawestland S.p.A.) (Agusta): Amendment 39–17607; Docket No. FAA–2013–0518; Directorate Identifier 2009–SW–021–AD.

(a) Applicability

This AD applies to Agusta Model A109A, A109AII, and A109C helicopters with a third stage turbine wheel, part number 23065833, installed, certificated in any category.

(b) Unsafe Condition

This AD defines the unsafe condition as a third stage turbine vibration, which could result in turbine failure, engine power loss, and subsequent loss of control of the helicopter.

(c) Effective Date

This AD becomes effective December 5, 2013.

(d) Compliance

You are responsible for performing each action required by this AD within the specified compliance time unless it has already been accomplished prior to that time.

(e) Required Actions

Within 30 days:

(1) For Model A109A helicopters, revise the Power Plant Limitations section, page 1–7, of the Model A109A Rotorcraft Flight Manual (RFM) by inserting page 5 of Agusta Bollettino Tecnico No. 109–129, dated February 16, 2009 (BT 109–129).

(2) For Model A109AII helicopters, revise the Power Plant Limitations section, page 1–6, of the Model A109AII RFM by inserting page 6 of BT 109–129.

(3) For Model A109C helicopters, revise the Power Plant and Transmission Limitations section, page 1–8, of the Model A109C RFM by inserting page 7 of BT 109–129.

(4) Install a placard on the instrument panel adjacent to the Engine and Rotor RPM Power Turbine (N2) Indicator that states: MIN. CONT. 97% N_2—MIN. TRANS. 95% N_2.

(f) Alternative Methods of Compliance (AMOCs)

(1) The Manager, Safety Management Group, FAA, may approve AMOCs for this AD. Send your proposal to: Chinh Vuong, Aviation Safety Engineer, Safety Management Group, Rotorcraft Directorate, FAA, 2601 Meacham Blvd., Fort Worth, Texas 76137; telephone (817) 222–5110; email *chinh.vuong@faa.gov*.

(2) For operations conducted under a 14 CFR part 119 operating certificate or under

14 CFR part 91, subpart K, we suggest that you notify your principal inspector, or lacking a principal inspector, the manager of the local flight standards district office or certificate holding district office, before operating any aircraft complying with this AD through an AMOC.

(g) Additional Information

(1) The subject of this AD is addressed in European Aviation Safety Agency (EASA) AD No. 2009–0037–E, dated February 19, 2009. You may view the EASA AD on the internet in the AD Docket at *http://www.regulations.gov*.

(h) Subject

Joint Aircraft Service Component (JASC) Code: 7250: Turbine Section.

(i) Material Incorporated by Reference

(1) The Director of the Federal Register approved the incorporation by reference (IBR) of the service information listed in this paragraph under 5 U.S.C. 552(a) and 1 CFR part 51.

(2) You must use this service information as applicable to do the actions required by this AD, unless the AD specifies otherwise.

(i) Agusta Bollettino Tecnico No. 109–129, dated February 16, 2009.

(ii) Reserved.

(3) For Agusta service information identified in this AD, contact Agusta Westland, Customer Support & Services, Via Per Tornavento 15, 21019 Somma Lombardo (VA) Italy, ATTN: Giovanni Cecchelli; telephone 39–0331–711133; fax 39 0331 711180; or at *http://www.agustawestland.com/technical-bullettins*.

(4) You may review this service information at the FAA, Office of the Regional Counsel, Southwest Region, 2601 Meacham Blvd., Room 663, Fort Worth, Texas 76137.

(5) You may also view this service information that is incorporated by reference at the National Archives and Records Administration (NARA). For information on the availability of this material at NARA, call (202) 741–6030, or go to: *http://www.archives.gov/federal-register/cfr/ibr-locations.html*.

Issued in Fort Worth, Texas, on September 20, 2013.

Scott A. Horn,

Acting Directorate Manager, Rotorcraft Directorate, Aircraft Certification Service.

[FR Doc. 2013–24038 Filed 10–30–13; 8:45 am]

BILLING CODE 4910–13–P

DEPARTMENT OF TRANSPORTATION

Federal Aviation Administration

14 CFR Part 39

[Docket No. FAA–2013–0454; Directorate Identifier 2009–SW–81–AD; Amendment 39–17621; AD 2013–20–15]

RIN 2120–AA64

Airworthiness Directives; Sikorsky Aircraft Corporation-Manufactured (Sikorsky) Model Helicopters (Type Certificate Currently Held by Erickson Air-Crane Incorporated)

AGENCY: Federal Aviation Administration (FAA), DOT.

ACTION: Final rule.

SUMMARY: We are superseding Airworthiness Directive (AD) 97–19–10 for Sikorsky Aircraft Corporation-manufactured Model S–64E helicopters (type certificate currently held by Erickson Air-Crane Incorporated (Erickson)). AD 97–19–10 required inspecting and reworking the main gearbox (MGB) assembly second stage lower planetary plate (plate). This action establishes or reduces the life limits for certain flight-critical components, removes from service various parts, requires repetitive inspections and other corrective actions, and requires replacing any cracked part discovered during an inspection. This AD is prompted by further analysis performed by the current type certificate holder and the service history of certain parts. The actions specified in this AD are intended to prevent a crack in a flight critical component, failure of a critical part, and subsequent loss of control of the helicopter.

DATES: This AD is effective December 5, 2013.

The Director of the Federal Register approved the incorporation by reference of a certain document listed in this AD as of December 5, 2013.

ADDRESSES: For service information identified in this AD, contact Erickson Air-Crane Incorporated, ATTN: Chris Erickson, Director of Regulatory Compliance, 3100 Willow Springs Rd, P.O. Box 3247, Central Point, OR 97502, telephone (541) 664–5544, fax (541) 664–2312, email address *cerickson@ericksonaircrane.com*. You may review a copy of the referenced service information at the FAA, Office of the Regional Counsel, Southwest Region, 2601 Meacham Blvd., Room 663, Fort Worth Texas 76137.

Examining the AD Docket

You may examine the AD docket on the Internet at *http://www.regulations.gov* or in person at the Docket Operations Office between 9 a.m. and 5 p.m., Monday through Friday, except Federal holidays. The AD docket contains this AD, any incorporated-by-reference service information, the economic evaluation, any comments received, and other information. The street address for the Docket Operations Office (phone: 800–647–5527) is U.S. Department of Transportation, Docket Operations Office, M–30, West Building Ground Floor, Room W12–140, 1200 New Jersey Avenue SE., Washington, DC 20590.

FOR FURTHER INFORMATION CONTACT: Michael Kohner, Aerospace Engineer, Rotorcraft Certification Office, Rotorcraft Directorate, FAA, 2601 Meacham Blvd., Fort Worth, TX 76137; telephone (817) 222–5170; email *7-avs-asw-170@faa.gov*.

SUPPLEMENTARY INFORMATION:

Discussion

On May 28, 2013, at 78 FR 31863, the **Federal Register** published our notice of proposed rulemaking (NPRM), which proposed to amend 14 CFR part 39 by adding an AD that would apply to Sikorsky Model CH–54A helicopters, now under the Erickson Air-Crane Incorporated (Erickson) Model S–64E type certificate. The NPRM proposed to supersede AD 97–19–10 (62 FR 47933, September 12, 1997), which required inspecting and reworking the MGB assembly plate. Since AD 97–19–10 was issued, further analysis was performed by the current type certificate holder. As a result, the NPRM proposed to establish or revise the life limit for various parts, to remove various parts from service, to require various inspections and other maintenance actions, and to revise the component history card or equivalent record and the airworthiness limitations section of the maintenance manual accordingly. The proposed requirements were intended to prevent a crack in a flight critical component, failure of a critical part, and subsequent loss of control of the helicopter.

Comments

We gave the public the opportunity to participate in developing this AD, but we did not receive any comments on the NPRM (78 FR 31863, May 28, 2013).

FAA's Determination

We have reviewed the relevant information and determined that an unsafe condition exists and is likely to exist or develop on other products of these same type designs and that air safety and the public interest require

adopting the AD requirements as proposed.

Related Service Information

Erickson Service Bulletin (SB) No. 64B General-1, Revision 19, dated September 15, 2010 (SB 64B General-1), specifies the retirement life for certain parts and assemblies as well as noting other maintenance actions. This and the previous revisions of SB 64B General-1 contain reduced or new life limits for certain parts, parts which should be removed from service, other maintenance actions, and various other provisions for certain parts. We have also reviewed Erickson SB No. 64B10–3, Revision D, dated October 15, 2007, which provides ultrasonic inspection procedures for the Main Rotor (M/R) hub horizontal hinge pins.

Differences Between This AD and the Service Information

This AD contains only those parts for the Model S–64E helicopters whose life limit has either been reduced or added for an existing P/N, whereas SB 64B General-1 also contains parts whose life limits have been extended. As a result, this proposed AD does not include all of the parts or P/Ns that are listed in SB 64B General-1.

Costs of Compliance

We estimate that this AD will affect 13 helicopters of U.S. registry, and the proposed actions will take the following number of estimated work hours to accomplish:

- 26 work hours (2 work hours per helicopter) for the fleet to review the helicopter records or to remove a part to determine if an affected part is installed;
- 845 work hours (65 work hours per helicopter) for the fleet to replace the parts or assemblies on or before reaching the retirement lives stated in Table 1 of the AD, assuming an annual usage of 600 hours TIS;
- 287 work hours per helicopter to replace all the parts or assemblies listed in Table 2 of the AD;
- 130 work hours (10 work hours per helicopter) for the fleet to inspect the M/R servo housing assemblies for an oil leak, assuming each inspection would take approximately 0.25 work hour per helicopter and would be accomplished 40 times annually;
- Approximately 293 work hours (22.5 work hours per helicopter) for the fleet to UT inspect each M/R hub horizontal hinge pin, assuming that each inspection would take 7.5 work hours per helicopter and would be accomplished 3 times annually;
- 288 work hours (48 work hours per helicopter) to perform an MPI of each main gearbox second stage lower planetary plate and second stage planetary plate assembly assuming 6 helicopters would be inspected annually;
- 192 work hours (32 work hours per helicopter) to perform an MPI of each M/R shaft and M/R shaft assembly, assuming 6 helicopters would be inspected annually, and
- 96 work hours (32 work hours per helicopter) to perform an FPI of each M/R tandem servo housing assembly, assuming 3 helicopters would be inspected annually.

Therefore, we estimate that it will take approximately 2,157 work hours to accomplish the proposed actions at a cost of $183,345, using an average labor rate $85 per work hour. Replacement parts will cost approximately:

- $5,363,449 ($412,573 per helicopter) to replace the parts or assemblies on the entire fleet on or before reaching the proposed retirement lives, assuming parts for 13 helicopters would require replacement; and
- $2,594,400 per helicopter to replace the parts or assemblies that are listed in Table 2 of the AD.

Using these assumptions, the estimated total cost for the required parts will be approximately $7,957,849. Based on these estimated amounts using these assumptions, we estimate the total cost impact of the AD on the U.S. operators will be $8,141,194.

Authority for This Rulemaking

Title 49 of the United States Code specifies the FAA's authority to issue rules on aviation safety. Subtitle I, section 106, describes the authority of the FAA Administrator. Subtitle VII: Aviation Programs, describes in more detail the scope of the Agency's authority.

We are issuing this rulemaking under the authority described in Subtitle VII, Part A, Subpart III, Section 44701: ''General requirements.'' Under that section, Congress charges the FAA with promoting safe flight of civil aircraft in air commerce by prescribing regulations for practices, methods, and procedures the Administrator finds necessary for safety in air commerce. This regulation is within the scope of that authority because it addresses an unsafe condition that is likely to exist or develop on products identified in this rulemaking action.

Regulatory Findings

This AD will not have federalism implications under Executive Order 13132. This AD will not have a substantial direct effect on the States, on the relationship between the national government and the States, or on the distribution of power and responsibilities among the various levels of government.

For the reasons discussed above, I certify that this AD:

(1) Is not a ''significant regulatory action'' under Executive Order 12866;

(2) Is not a ''significant rule'' under DOT Regulatory Policies and Procedures (44 FR 11034, February 26, 1979);

(3) Will not affect intrastate aviation in Alaska to the extent that it justifies making a regulatory distinction; and

(4) Will not have a significant economic impact, positive or negative, on a substantial number of small entities under the criteria of the Regulatory Flexibility Act.

We prepared an economic evaluation of the estimated costs to comply with this AD and placed it in the AD docket.

List of Subjects in 14 CFR Part 39

Air transportation, Aircraft, Aviation safety, Incorporation by reference, Safety.

Adoption of the Amendment

Accordingly, under the authority delegated to me by the Administrator, the FAA amends 14 CFR part 39 as follows:

PART 39—AIRWORTHINESS DIRECTIVES

■ 1. The authority citation for part 39 continues to read as follows:

Authority: 49 U.S.C. 106(g), 40113, 44701.

§ 39.13 [Amended]

■ 2. The FAA amends § 39.13 by removing Airworthiness Directive (AD) 97–19–10, Amendment 39–10130 (62 FR 47933, September 12, 1997), and adding the following new AD:

2013–20–15 SIKORSKY AIRCRAFT CORPORATION-MANUFACTURED (SIKORSKY) MODEL HELICOPTERS (TYPE CERTIFICATE CURRENTLY HELD BY ERICKSON AIR-CRANE INCORPORATED): Amendment 39–17621; Docket No. FAA–2013–0454; Directorate Identifier 2009–SW–81–AD.

(a) Applicability

This AD applies to Sikorsky Model CH–54A helicopters, now under the Erickson Air-Crane Incorporated (Erickson) Model S–64E type certificate, certificated in any category.

(b) Unsafe Condition

This AD defines the unsafe condition as fatigue cracking in a flight critical component, failure of the component, and subsequent loss of control of the helicopter.

(c) Affected ADs

This AD supersedes AD 97–19–10, Amendment 39–10130 (62 FR 47933, September 12, 1997).

(d) Effective Date

This AD becomes effective December 5, 2013.

(e) Compliance

You are responsible for performing each action required by this AD within the specified compliance time unless it has already been accomplished prior to that time.

(f) Required Actions

(1) Before further flight, for each part listed in Table 1 to paragraph (f) of this AD:

(i) Remove any part that has reached or exceeded its newly established or revised retirement life.

(ii) Record the newly established or revised retirement life for each part on the component history card or equivalent record.

(iii) Make pen and ink changes or insert a copy of this AD into the Airworthiness Limitations section of the maintenance manual to establish or revise the retirement life for each part that is listed in Table 1 to paragraph (f) of this AD.

TABLE 1 TO PARAGRAPH (F) OF THIS AD—PARTS WITH NEW OR REVISED LIFE LIMITS

Part name	Part No. (P/N)	Retirement life
Rod and bushing assembly, main rotor (M/R)	6410–21090–012	5,700 hours time-in-service (TIS) or 60 months since the initial installation on any helicopter, whichever occurs first.
Rod and bushing assembly, M/R	6410–21090–013 or –014	5,700 hours TIS.
Lower plate, M/R hub	6410–23009–102	3,000 hours TIS.
Upper plate, M/R hub	6410–23011–102	3,000 hours TIS.
Swashplate, rotating, M/R	6410–24002–101	12,860 hours TIS.
Piston rod	6410–26005–104	10,500 hours TIS.
Cylinder, damper assembly	6410–26215–101	7,300 hours TIS.
M/R blade	6415–20201–045 or –047	3,300 hours TIS.
M/R blade	6415–20201–048, –049, –050, or –051	20,000 hours TIS.
Truss assembly, stabilizer	6420–66250–041	4,720 hours TIS.
M/R shaft assembly (includes shaft, P/N 6435–20078–104).	6435–20078–014 or –015	2,600 hours TIS.
M/R shaft assembly (includes shaft, P/N 6435–20078–105).	6435–20078–016	5,000 hours TIS.
Second stage planetary plate assembly, main gearbox assembly.	6435–20231–012, –014, or –015	1,300 hours TIS.
Second stage planetary plate assembly, main gearbox assembly.	6435–20231–016	2,600 hours TIS.
Oil cooler and support assembly	6435–60050–044	9,885 hours TIS.
Tail rotor (T/R) blade	65160–00001–042, –045, or –048	23,300 hours TIS.
T/R blade	65161–00001–042	23,300 hours TIS.
Hub, M/R	S1510–23001–005	3,000 hours TIS.
Spindle assembly, M/R	S1510–23027–5	5,675 hours TIS.
Horn assembly, M/R	S1510–23350–4, –6, or –8	9,710 hours TIS.
Sleeve, M/R	S1510–23351–2	12,930 hours TIS.
Sleeve lockwasher, M/R	S1510–23458–0	2,700 hours TIS.
Cuff, M/R blade	S1515–20320–0	6,410 hours TIS.
Cuff, M/R blade	S1515–20320–001 or –002	12,930 hours TIS.
Piston assembly, M/R tandem servo	S1565–20443–0 or S1565–20443–301	8,100 hours TIS.
Fork assembly, M/R tandem servo	S1565–20449 or S1565–20449–301	8,100 hours TIS.
Bearing, T/R drive shaft	SB1111–004 or –601	1,000 hours TIS or 12 months while installed on any helicopter, whichever occurs first.

Note to Table 1 to paragraph (f) of this AD: The list of parts in Table 1 to paragraph (f) of this AD contains only a portion of the life-limited parts for this model helicopter and is not an all-inclusive list.

(2) Before further flight, remove from service any part with a P/N listed in Table 2 to Paragraph (f) of this AD, regardless of the part's TIS. The part numbers listed in Table 2 to paragraph (f)(2) of this AD are not eligible for installation on any helicopter.

TABLE 2 TO PARAGRAPH (F) OF THIS AD—PARTS TO BE REMOVED FROM SERVICE

Part name	P/N
Rod and bushing assembly, M/R	6410–21090–011.
M/R blade	6415–20001–013, –014, or –015.
Pylon stabilizer	6420–66201–010, –014, or –015.
M/R shaft assembly	6435–20078–013.
Oil cooler and support assembly	6435–60050–043.
Pitch change link, rotary rudder	65113–07100–046.
Spindle, M/R blade	S1510–23070–3.

(3) Within 20 hours TIS, and thereafter at intervals not to exceed 20 hours TIS, visually inspect each M/R servo and control arm assembly, P/N S1565–20421–10, –11, –041, or –043, and determine if there is any oil leaking from the M/R tandem servo housing assembly (servo housing), P/N S1565–20252–2. If there is any oil leaking from the servo housing, before further flight, replace the M/R servo and control arm assembly.

(4) Within 20 hours TIS or before reaching 1,120 hours TIS, whichever occurs later, and thereafter at intervals not to exceed 200 hours TIS or 12 months, whichever occurs first, ultrasonic (UT) inspect each M/R hub horizontal hinge pin (hinge pin), P/N S1510–23099–1 or P/N S1510–23099–001, for a crack in accordance with the

Accomplishment Instructions, paragraphs 2.A through 2.C, of Erickson Service Bulletin No. 64B10–3, Revision D, dated October 15, 2007, except you are not required to contact Erickson nor send hinge pins to them. A non-destructive testing (NDT) UT Level I Special, Level II, or Level III inspector who is qualified under the guidelines established by ASNT SNT–TC–1A, ISO 9712, or an FAA-accepted equivalent qualification standard for NDT inspection and evaluation, must perform the UT inspection.

(5) Within 150 hours TIS or before reaching 1,450 hours TIS, whichever occurs later, perform a fluorescent-magnetic particle inspection (MPI) of each second stage planetary plate assembly, P/N 6435–20231–016, for a crack.

(6) Within 150 hours TIS or before reaching 1,450 hours TIS, whichever occurs later, and thereafter at intervals not to exceed 650 hours TIS, perform an MPI of each M/R shaft, P/N 6435–20078–104, for a crack, paying particular attention to the lower spline area.

(7) Within 150 hours TIS or before reaching 1,450 hours TIS, whichever occurs later, and thereafter at intervals not to exceed 1,450 hours TIS, perform an MPI of each M/R shaft, P/N 6435–20078–105, for a crack, paying particular attention to the lower spline area.

(8) Within 150 hours TIS or before reaching 3,375 hours TIS, whichever occurs later, and thereafter at intervals not to exceed 3,375 hours TIS, perform a fluorescent penetrant inspection of each housing lug on each servo housing, P/N S1565–20252–2, for a crack.

(9) At each overhaul of the main gearbox assembly, P/N 6435–20400–053, –054, –058, –060, –062, –063, –064, –065, or –066, perform an MPI of the entire shaft of each M/R shaft assembly, P/N 6435–20078–014, –015, or –016, for a crack, paying particular attention to the rotating swashplate spherical bearing ball travel area, which is located approximately ten inches above the upper roller bearing journal shoulder.

(10) If there is a crack in any part, before further flight, replace the cracked part.

(11) At each overhaul of the damper assembly, P/N 6410–26200–042, replace the following parts with airworthy parts that have zero (0) hours TIS:

(i) All Air Force-Navy Aeronautical Standard (AN), Aerospace Standard (AS), Military Standard (MS), and National Aerospace Standard (NAS) nuts, bolts, washers, and packings, except packing, P/N MS28775–011, installed on stud, P/N SHF111–11SN–12A;

(ii) Lock washer, P/N SS5073–2;

(iii) Nut, P/N SS5081–05;

(iv) Felt seal, P/N S1510–26017;

(v) Retaining ring, P/N UR106L; and

(vi) Nut, P/N 6410–26214–101.

(g) Alternative Methods of Compliance (AMOCs)

(1) The Manager, Rotorcraft Certification Office, FAA, may approve AMOCs for this AD. Send your proposal to: Michael Kohner, Aerospace Engineer, Rotorcraft Certification Office, Rotorcraft Directorate, FAA, 2601 Meacham Blvd., Fort Worth, TX 76137; telephone (817) 222–5170; email *7-avs-asw-170@faa.gov.*

(2) For operations conducted under a 14 CFR part 119 operating certificate or under 14 CFR part 91, subpart K, we suggest that you notify your principal inspector, or lacking a principal inspector, the manager of the local flight standards district office or certificate holding district office before operating any aircraft complying with this AD through an AMOC.

(h) Additional Information

Erickson Service Bulletin No. 64B General–1, Revision 19, dated September 15, 2010, which is not incorporated by reference, contains additional information about the subject of this AD. For service information identified in this AD, contact Erickson Air-Crane Incorporated, ATTN: Chris Erickson, Director of Regulatory Compliance, 3100 Willow Springs Rd., P.O. Box 3247, Central Point, OR 97502, telephone (541) 664–5544, fax (541) 664–2312, email address *cerickson@ericksonaircrane.com.* You may review a copy of this information at the FAA, Office of the Regional Counsel, Southwest Region, 2601 Meacham Blvd., Room 663, Fort Worth, Texas 76137.

(i) Subject

Joint Aircraft Service Component (JASC) Code: 6200: Main Rotor System; 6300: Main Rotor Drive System; 6410: Tail Rotor Blades; 6500: Tail Rotor Drive System.

(j) Material Incorporated by Reference

(1) The Director of the Federal Register approved the incorporation by reference (IBR) of the service information listed in this paragraph under 5 U.S.C. 552(a) and 1 CFR part 51.

(2) You must use this service information as applicable to do the actions required by this AD, unless the AD specifies otherwise.

(i) Erickson Service Bulletin No. 64B10–3, Revision D, dated October 15, 2007.

(ii) Reserved.

(3) For Erickson service information identified in this AD, contact Erickson Air-Crane Incorporated, ATTN: Chris Erickson, Director of Regulatory Compliance, 3100 Willow Springs Rd, P.O. Box 3247, Central Point, OR 97502, telephone (541) 664–5544, fax (541) 664–2312, email address *cerickson@ericksonaircrane.com.*

(4) You may view this service information that is incorporated by reference at FAA, Office of the Regional Counsel, Southwest Region, 2601 Meacham Blvd., Room 663, Fort Worth, Texas 76137.

(5) You may also view this service information that is incorporated by reference at the National Archives and Records Administration (NARA). For information on the availability of this material at NARA, call (202) 741–6030, or go to: *http://www.archives.gov/federal-register/cfr/ibr-locations.html.*

Issued in Fort Worth, Texas, on September 25, 2013.

Lance T. Gant,

Acting Directorate Manager, Rotorcraft Directorate, Aircraft Certification Service.

[FR Doc. 2013–24955 Filed 10–30–13; 8:45 am]

BILLING CODE 4910–13–P

DEPARTMENT OF TRANSPORTATION

Federal Aviation Administration

14 CFR Part 39

[Docket No. FAA–2013–0625; Directorate Identifier 2013–NM–013–AD; Amendment 39–17638; AD 2013–22–06]

RIN 2120–AA64

Airworthiness Directives; The Boeing Company Airplanes

AGENCY: Federal Aviation Administration (FAA), DOT.

ACTION: Final rule.

SUMMARY: We are superseding Airworthiness Directive (AD) 94–13–06 for certain The Boeing Company Model 747 series airplanes. AD 94–13–06 required repetitive detailed inspections to detect cracking in certain fuselage upper deck tension ties, repair or modification of any cracked tension ties, and repetitive inspections of repaired and modified tension ties and repair or modification if necessary. AD 94–13–06 also provided for optional terminating action for the repetitive detailed inspections of tension ties that had not been repaired or modified. This new AD retains the repetitive inspections, mandates the previously optional terminating modification, and adds, for tension ties that have not been repaired or modified, repetitive inspections that must be done concurrently with the existing repetitive inspections. This AD was prompted by an evaluation by the design approval holder indicating that the upper deck tension ties of the fuselage are subject to widespread fatigue damage. We are issuing this AD to prevent widespread fatigue damage of certain fuselage upper deck tension ties, which could result in reduced structural integrity of the airplane.

DATES: This AD is effective December 5, 2013.

The Director of the Federal Register approved the incorporation by reference of a certain publication listed in this AD as of December 5, 2013.

ADDRESSES: For service information identified in this AD, contact, contact Boeing Commercial Airplanes, Attention: Data & Services Management, P.O. Box 3707, MC 2H–65, Seattle, WA 98124–2207; telephone 206–544–5000, extension 1; fax 206–766–5680; Internet *https://www.myboeingfleet.com.* You may view this referenced service information at the FAA, Transport Airplane Directorate, 1601 Lind Ave. SW., Renton, Washington. For information on the availability of this material at the FAA, call 425–227–1221.

Examining the AD Docket

You may examine the AD docket on the Internet at *http://www.regulations.gov;* or in person at the Docket Management Facility between 9 a.m. and 5 p.m., Monday through Friday, except Federal holidays. The AD docket contains this AD, the regulatory evaluation, any comments received, and other information. The address for the Docket Office (phone: 800–647–5527) is Document Management Facility, U.S. Department of Transportation, Docket Operations, M–30, West Building Ground Floor, Room W12–140, 1200 New Jersey Avenue SE., Washington, DC 20590.

FOR FURTHER INFORMATION CONTACT:

Nathan Weigand, Aerospace Engineer, Airframe Branch, ANM–120S, FAA, Seattle Aircraft Certification Office, 1601 Lind Avenue SW., Renton, Washington 98057–3356; phone: (425) 917–6428; fax: (425) 917–6590; email: *nathan.p.weigand@faa.gov.*

SUPPLEMENTARY INFORMATION:

Discussion

We issued a notice of proposed rulemaking (NPRM) to amend 14 CFR part 39 to supersede AD 94–13–06, Amendment 39–8946 (59 FR 32879, June 27, 1994). AD 94–13–06 applied to the specified products. The NPRM published in the **Federal Register** on July 22, 2013 (78 FR 43839). The NPRM proposed to continue to require repetitive detailed inspections to detect cracking in certain fuselage upper deck tension ties, repair or modification of any cracked tension ties, and repetitive inspections of repaired and modified tension ties and repair or modification if necessary. The NPRM also proposed to mandate the previously optional terminating modification, and add, for tension ties that have not been repaired or modified, repetitive inspections that must be done concurrently with the existing repetitive inspections.

Comments

We gave the public the opportunity to participate in developing this AD. We have considered the comment received. Boeing supported the NPRM (78 FR 43839, July 22, 2013).

Conclusion

We reviewed the relevant data, considered the comment received, and determined that air safety and the public interest require adopting this AD as proposed.

Costs of Compliance

We estimate that this AD affects 113 airplanes of U.S. registry.

We estimate the following costs to comply with this AD:

ESTIMATED COSTS

Action	Labor cost	Parts cost	Cost per product	Cost on U.S. operators
Detailed inspections [retained action from AD 94–13–06, Amendment 39–8946 (59 FR 32879, June 27, 1994)].	5 work-hours × $85 per hour = $425.	$0	$425 per inspection cycle.	$48,025 per inspection cycle.
Post-mod/repair inspections [new proposed action].	1 work-hour × $85 per hour = $85.	0	$85	$9,605.
Modification [new proposed action]	Up to 112 work-hours × $85 per hour = up to $9,520.	0	Up to $9,520	Up to $1,075,760.

We have received no definitive data that would enable us to provide cost estimates for the on-condition actions specified in this AD.

Authority for This Rulemaking

Title 49 of the United States Code specifies the FAA's authority to issue rules on aviation safety. Subtitle I, Section 106, describes the authority of the FAA Administrator. Subtitle VII, Aviation Programs, describes in more detail the scope of the Agency's authority.

We are issuing this rulemaking under the authority described in Subtitle VII, Part A, Subpart III, Section 44701, ''General requirements.'' Under that section, Congress charges the FAA with promoting safe flight of civil aircraft in air commerce by prescribing regulations for practices, methods, and procedures the Administrator finds necessary for safety in air commerce. This regulation is within the scope of that authority because it addresses an unsafe condition that is likely to exist or develop on products identified in this rulemaking action.

Regulatory Findings

We have determined that this AD will not have federalism implications under Executive Order 13132. This AD will not have a substantial direct effect on the States, on the relationship between the national government and the States, or on the distribution of power and responsibilities among the various levels of government.

For the reasons discussed above, I certify that this AD:

(1) Is not a ''significant regulatory action'' under Executive Order 12866,

(2) Is not a ''significant rule'' under DOT Regulatory Policies and Procedures (44 FR 11034, February 26, 1979),

(3) Will not affect intrastate aviation in Alaska, and

(4) Will not have a significant economic impact, positive or negative, on a substantial number of small entities under the criteria of the Regulatory Flexibility Act.

List of Subjects in 14 CFR Part 39

Air transportation, Aircraft, Aviation safety, Incorporation by reference, Safety.

Adoption of the Amendment

Accordingly, under the authority delegated to me by the Administrator, the FAA amends 14 CFR part 39 as follows:

PART 39—AIRWORTHINESS DIRECTIVES

■ 1. The authority citation for part 39 continues to read as follows:

Authority: 49 U.S.C. 106(g), 40113, 44701.

§ 39.13 [Amended]

■ 2. The FAA amends § 39.13 by removing Airworthiness Directive (AD) 94–13–06, Amendment 39–8946 (59 FR 32879, June 27, 1994), and adding the following new AD:

2013–22–06 The Boeing Company: Amendment 39–17638; Docket No. FAA–2013–0625; Directorate Identifier 2013–NM–013–AD.

(a) Effective Date

This AD is effective December 5, 2013.

(b) Affected ADs

This AD supersedes AD 94–13–06, Amendment 39–8946 (59 FR 32879, June 27, 1994).

(c) Applicability

This AD applies to The Boeing Company Model 747–100, 747–200B, and 747–200F series airplanes, certificated in any category, as listed in Boeing Alert Service Bulletin 747–53A2371, Revision 2, dated December 11, 2012.

(d) Subject

Joint Aircraft System Component (JASC)/ Air Transport Association (ATA) of America Code 53, Fuselage.

(e) Unsafe Condition

This AD was prompted by an evaluation by the design approval holder indicating that the upper deck tension ties of the fuselage are subject to widespread fatigue damage. We are issuing this AD to prevent widespread fatigue damage of certain fuselage upper deck tension ties, which could result in reduced structural integrity of the airplane.

(f) Compliance

Comply with this AD within the compliance times specified, unless already done.

(g) Inspections and Repair/Modification

Except as required by paragraph (k)(3) of this AD, at the applicable time specified in Tables 1 and 3 of paragraph 1.E., ''Compliance'' of Boeing Alert Service Bulletin 747–53A2371, Revision 2, dated December 11, 2012: Do detailed and surface high frequency eddy current (HFEC) inspections for cracks in the tension ties, as applicable, and do all applicable corrective actions, in accordance with the Accomplishment Instructions of Boeing Alert Service Bulletin 747–53A2371, Revision 2, dated December 11, 2012, except as required by paragraph (k)(2) of this AD. The effective date of AD 94–13–06, Amendment 39–8946 (59 FR 32879, June 27, 1994) is July 27, 1994. Do all applicable corrective actions before further flight. Repeat the detailed and HFEC inspections thereafter at the time specified in paragraph 1.E., ''Compliance,'' of Boeing Alert Service Bulletin 747–53A2371, Revision 2, dated December 11, 2012, except as specified in paragraph (k)(1) of this AD. Repair of a tension tie, in accordance with the Accomplishment Instructions of Boeing Alert Service Bulletin 747–53A2371, Revision 2, dated December 11, 2012, except as required by paragraph (k)(2) of this AD, terminates the requirements of this paragraph for that tension tie only.

(h) Modification

Except as provided by paragraph (k)(3) of this AD, at the applicable time specified in Table 3 of paragraph 1.E., ''Compliance,'' of Boeing Alert Service Bulletin 747–53A2371, Revision 2, dated December 11, 2012: Modify the tension ties, including doing an open-hole HFEC inspection for cracks before enlarging the hole, in accordance with the Accomplishment Instructions of Boeing Alert Service Bulletin 747–53A2371, Revision 2, dated December 11, 2012. Modification of the tension ties terminates the requirements of paragraph (g) of this AD. If any cracking is found, before further flight, do the repair using a method approved in accordance with the procedures specified in paragraph (l) of this AD.

(i) Post-Repair/Modification Inspections

At the applicable time specified in Table 2 of paragraph 1.E., ''Compliance,'' of Boeing Alert Service Bulletin 747–53A2371, Revision 2, dated December 11, 2012: Do a detailed inspection of all repaired and modified tension ties, and do all applicable corrective actions, except as required by paragraph (k)(2) of this AD, in accordance with the Accomplishment Instructions of Boeing Alert Service Bulletin 747–53A2371, Revision 2, dated December 11, 2012, except as required by paragraph (k)(2) of this AD. Repeat the inspection thereafter at the times specified in paragraph 1.E., ''Compliance,'' of Boeing Alert Service Bulletin 747–53A2371, Revision 2, dated December 11, 2012. Do all applicable corrective actions before further flight.

(j) Credit for Previous Actions

This paragraph provides credit for the modification required by paragraphs (g) and (h) of this AD if that modification was done before the effective date of this AD using Boeing Service Bulletin 747–53–2371, dated July 29, 1993; or Boeing Service Bulletin 747–53–2371, Revision 1, dated April 27, 1995; which are not incorporated by reference in this AD. Boeing Service Bulletin 747–53–2371, dated July 29, 1993, was incorporated by reference in AD 94–13–06, Amendment 39–8946 (59 FR 32879, June 27, 1994).

(k) Exception to Service Information

(1) Where Row 2 of Table 3 of paragraph 1.E., ''Compliance,'' of Boeing Alert Service Bulletin 747–53A2371, Revision 2, dated December 11, 2012, specifies repeating a ''detailed'' inspection, ''as given in Part 4'' of this service information, the repetitive inspections required by this AD are ''HFEC'' inspections, done in accordance with Part 4 and Figure 8 of Boeing Alert Service Bulletin 747–53A2371, Revision 2, dated December 11, 2012.

(2) Where Boeing Alert Service Bulletin 747–53A2371, Revision 2, dated December 11, 2012, specifies contacting Boeing for repair instructions, or does not include repair instructions for a crack found in an area other than the aft tension tie area: Before further flight, do the repair using a method approved in accordance with the procedures specified in paragraph (l) of this AD.

(3) Where Boeing Alert Service Bulletin 747–53A2371, Revision 2, dated December 11, 2012, specifies a compliance time of ''after the Revision 2 date of this service bulletin,'' this AD requires compliance within the specified compliance time after the effective date of this AD.

(l) Alternative Methods of Compliance (AMOCs)

(1) The Manager, Seattle Aircraft Certification Office (ACO), has the authority to approve AMOCs for this AD, if requested using the procedures found in 14 CFR 39.19. In accordance with 14 CFR 39.19, send your request to your principal inspector or local Flight Standards District Office, as appropriate. If sending information directly to the manager of the ACO, send it to the attention of the person identified in paragraph (m)(1) of this AD. Information may be emailed to: *9-ANM-Seattle-ACO-AMOC-Requests@faa.gov.*

(2) Before using any approved AMOC, notify your appropriate principal inspector, or lacking a principal inspector, the manager of the local flight standards district office/ certificate holding district office.

(3) An AMOC that provides an acceptable level of safety may be used for any repair required by this AD if it is approved by the Boeing Commercial Airplanes ODA that has been authorized by the Manager, Seattle ACO to make those findings. For a repair method to be approved, the repair must meet the certification basis of the airplane, and the approval must specifically refer to this AD.

(4) AMOCs approved for AD 94–13–06, Amendment 39–8946 (59 FR 32879, June 27, 1994), are approved as AMOCs for the corresponding actions required by paragraphs (g), (h), and (i) of this AD.

(m) Related Information

(1) For more information about this AD, contact Nathan Weigand, Aerospace Engineer, Airframe Branch, ANM–120S, FAA, Seattle Aircraft Certification Office, 1601 Lind Avenue SW., Renton, Washington 98057–3356; phone: (425) 917–6428; fax: (425) 917–6590; email: *nathan.p.weigand@faa.gov.*

(2) Service information in this AD that is not incorporated by reference may be obtained at the addresses specified in paragraphs (n)(3) and (n)(4) of this AD.

(n) Material Incorporated by Reference

(1) The Director of the Federal Register approved the incorporation by reference (IBR) of the service information listed in this paragraph under 5 U.S.C. 552(a) and 1 CFR part 51.

(2) You must use this service information as applicable to do the actions required by this AD, unless the AD specifies otherwise.

(i) Boeing Alert Service Bulletin 747–53A2371, Revision 2, dated December 11, 2012.

(ii) Reserved.

(3) For service information identified in this AD, contact Boeing Commercial Airplanes, Attention: Data & Services Management, P.O. Box 3707, MC 2H–65, Seattle, WA 98124–2207; telephone 206–544–5000, extension 1; fax 206–766–5680; Internet *https://www.myboeingfleet.com.*

(4) You may view this service information at FAA, Transport Airplane Directorate, 1601 Lind Avenue SW., Renton, Washington. For information on the availability of this material at the FAA, call 425–227–1221.

(5) You may view this service information that is incorporated by reference at the National Archives and Records Administration (NARA). For information on the availability of this material at NARA, call 202–741–6030, or go to *http://www.archives.gov/federal-register/cfr/ibr-locations.html.*

Issued in Renton, Washington, on October 15, 2013.

Jeffrey E. Duven,

Acting Manager, Transport Airplane Directorate, Aircraft Certification Service.

[FR Doc. 2013–25307 Filed 10–30–13; 8:45 am]

BILLING CODE 4910–13–P

DEPARTMENT OF TRANSPORTATION

Federal Aviation Administration

14 CFR Part 39

[Docket No. FAA–2013–0446; Directorate Identifier 2010–SW–007–AD; Amendment 39–17629; AD 2013–21–05]

RIN 2120–AA64

Airworthiness Directives; Eurocopter Deutschland GmbH Helicopters

AGENCY: Federal Aviation Administration (FAA), DOT.

ACTION: Final rule.

SUMMARY: We are adopting a new airworthiness directive (AD) for Eurocopter Deutschland GmbH (Eurocopter) Model EC135 P1, P2, P2+, T1, T2, and T2+ helicopters. This AD requires inspecting each linear transducer bearing (bearing) for freedom of movement and replacing the bearing if there is binding or rough turning or if there is chafing or damage on the lower side of the floor. Also, this AD requires modifying and re-identifying a certain rod. This AD was prompted by an incident involving limited control of a tail rotor because of the binding of a bearing. The actions of this AD are intended to detect and replace each bearing subject to binding, which could lead to subsequent loss of control of the helicopter.

DATES: This AD is effective December 5, 2013.

The Director of the Federal Register approved the incorporation by reference of a certain document listed in this AD as of December 5, 2013.

ADDRESSES: For service information identified in this AD, contact American Eurocopter Corporation, 2701 N. Forum Drive, Grand Prairie, TX 75052, telephone (972) 641–0000 or (800) 232–0323, fax (972) 641–3775, or at *http://www.eurocopter.com/techpub.* You may review the referenced service information at the FAA, Office of the Regional Counsel, Southwest Region, 2601 Meacham Blvd., Room 663, Fort Worth, Texas 76137.

Examining the AD Docket

You may examine the AD docket on the Internet at *http://www.regulations.gov* or in person at the Docket Operations Office between 9 a.m. and 5 p.m., Monday through Friday, except Federal holidays. The AD docket contains this AD, the foreign authority's AD, any incorporated-by-reference service information, the economic evaluation, any comments received, and other information. The street address for the Docket Operations Office (phone: 800–647–5527) is U.S. Department of Transportation, Docket Operations Office, M–30, West Building Ground Floor, Room W12–140, 1200 New Jersey Avenue SE., Washington, DC 20590.

FOR FURTHER INFORMATION CONTACT: Matt Fuller, Senior Aviation Safety Engineer, Safety Management Group, Rotorcraft Directorate, FAA, 2601 Meacham Blvd., Fort Worth, Texas 76137; telephone (817) 222–5110; email *matthew.fuller@faa.gov.*

SUPPLEMENTARY INFORMATION:

Discussion

On May 23, 2013, at 78 FR 30793, the **Federal Register** published our notice of proposed rulemaking (NPRM), which proposed to amend 14 CFR part 39 by adding an AD that would apply to Model EC135 P1, P2, P2+, T1, T2, and T2+ helicopters, with bearing, part number (P/N) LN9367GE6N2; rod, P/N L671M5040205; lever, P/N L671M5040101; and floor, P/N L533M1014101, L533M1014102, L533M1014103, L533M1014104, L533M1014105 or L533M1014106, installed. The NPRM proposed to require, at specified intervals, inspecting each bearing for freedom of movement. The NPRM also proposed, before further flight, if there is binding or rough turning, replacing the bearing or if there is chafing or damage on the lower side of the floor, replacing the bearing and repairing the floor, and, thereafter, installing a Teflon strip. The NPRM also proposed modifying the rod and re-identifying the rod and lever with a new part number. The requirements were intended to detect and replace each bearing subject to binding, which could lead to subsequent loss of control of the helicopter.

The NPRM was prompted by AD No. 2006–0318 R1, dated October 27, 2006, issued by the European Aviation Safety Agency (EASA), which is the Technical Agent for the Member States of the European Union, to correct an unsafe condition for all Eurocopter Model EC 135 helicopters. EASA advises of an incident in which impaired control of an EC 135 tail rotor was detected. EASA states that according to examinations, the bearing of the linear transducer was subject to binding, which limited the control range.

FAA's Determination

Comments

We gave the public the opportunity to participate in developing this AD, but we did not receive any comments on the NPRM (78 FR 30793, May 23, 2013).

FAA's Determination

These helicopters have been approved by the aviation authority of Germany and are approved for operation in the United States. Pursuant to our bilateral agreement with Germany, EASA, its technical representative, has notified us of the unsafe condition described in its AD. We are issuing this AD because we evaluated all information provided by EASA and determined the unsafe condition exists and is likely to exist or develop on other helicopters of these same type designs and that air safety and the public interest require adopting the AD requirements as proposed.

Differences Between This AD and the EASA AD

This AD does not refer to the compliance date of October 31, 2006, because that date has passed; instead we require compliance within 100 hours time-service (TIS). This AD does not require contacting Eurocopter customer support. This AD requires modifying each rod within 100 hours TIS, rather than within 800 hours TIS as specified in the EASA AD.

Related Service Information

Eurocopter has issued Alert Service Bulletin EC135–67A–012, Revision 1, dated October 18, 2006 (ASB), which specifies inspecting the bearing of the linear transducer for freedom of movement and the lower side of the floor for chafing or damage. If there is binding, the ASB specifies replacing the bearing. If there is chafing or damage on the floor, the ASB specifies replacing the bearing and repairing the floor. The ASB also specifies modifying and reidentifying a certain rod. EASA classified this ASB as mandatory and issued EASA AD 2006–0318 R1, dated October 27, 2006, to ensure the continued airworthiness of these helicopters.

Costs of Compliance

We estimate that this AD will affect 214 helicopters of U.S. Registry. We estimate that operators may incur the following costs in order to comply with this AD: It will take about 10 work-hours to inspect the bearing for freedom of movement at an average labor rate of

$85 per work hour. No parts or materials are required for the inspection. Based on these estimates, the cost will be $850 per helicopter or $181,900 for the fleet of all U.S.-registered helicopters. If necessary, replacing the bearing will require 3 additional work-hours, and parts will cost $50. Repairing the floor will require 3 additional work hours and minimal cost for materials.

Authority for This Rulemaking

Title 49 of the United States Code specifies the FAA's authority to issue rules on aviation safety. Subtitle I, section 106, describes the authority of the FAA Administrator. Subtitle VII: Aviation Programs, describes in more detail the scope of the Agency's authority.

We are issuing this rulemaking under the authority described in Subtitle VII, Part A, Subpart III, Section 44701: ''General requirements.'' Under that section, Congress charges the FAA with promoting safe flight of civil aircraft in air commerce by prescribing regulations for practices, methods, and procedures the Administrator finds necessary for safety in air commerce. This regulation is within the scope of that authority because it addresses an unsafe condition that is likely to exist or develop on helicopters identified in this rulemaking action.

Regulatory Findings

This AD will not have federalism implications under Executive Order 13132. This AD will not have a substantial direct effect on the States, on the relationship between the national government and the States, or on the distribution of power and responsibilities among the various levels of government.

For the reasons discussed above, I certify that this AD:

(1) Is not a ''significant regulatory action'' under Executive Order 12866;

(2) Is not a ''significant rule'' under DOT Regulatory Policies and Procedures (44 FR 11034, February 26, 1979);

(3) Will not affect intrastate aviation in Alaska to the extent that it justifies making a regulatory distinction; and

(4) Will not have a significant economic impact, positive or negative, on a substantial number of small entities under the criteria of the Regulatory Flexibility Act.

We prepared an economic evaluation of the estimated costs to comply with this AD and placed it in the AD docket.

List of Subjects in 14 CFR Part 39

Air transportation, Aircraft, Aviation safety, Incorporation by reference, Safety.

Adoption of the Amendment

Accordingly, under the authority delegated to me by the Administrator, the FAA amends 14 CFR part 39 as follows:

PART 39—AIRWORTHINESS DIRECTIVES

■ 1. The authority citation for part 39 continues to read as follows:

Authority: 49 U.S.C. 106(g), 40113, 44701.

§ 39.13 [Amended]

■ 2. The FAA amends § 39.13 by adding the following new airworthiness directive (AD):

2013–21–05 Eurocopter Deutschland GmbH: Amendment 39–17629; Docket No. FAA–2013–0446; Directorate Identifier 2010–SW–007–AD.

(a) Applicability

This AD applies to Model EC135 P1, P2, P2+, T1, T2, and T2+ helicopters, with bearing, part number (P/N) LN9367GE6N2; rod, P/N L671M5040205; lever, P/N L671M5040101; and floor, P/N L533M1014101, L533M1014102, L533M1014103, L533M1014104, L533M1014105 or L533M1014106, installed, certificated in any category.

(b) Unsafe Condition

This AD defines the unsafe condition as limited control of a tail rotor because of the binding of a bearing. This condition could result in subsequent loss of control of the helicopter.

(c) Effective Date

This AD becomes effective December 5, 2013.

(d) Compliance

You are responsible for performing each action required by this AD within the specified compliance time unless it has already been accomplished prior to that time.

(e) Required Actions

(1) Within 100 hours time-in-service (TIS) and thereafter at intervals not to exceed 800 hours TIS, inspect each bearing for freedom of movement by turning and tilting the bearing as depicted in Figure 2 of Eurocopter Alert Service Bulletin No. EC135–67A–012, Revision 1, dated October 18, 2006 (ASB). During any inspection:

(i) If there is binding or rough turning, before further flight, replace the bearing with an airworthy bearing.

(ii) If there is chafing on the lower side of the floor that does not extend through the panel outer layer, before further flight, replace the bearing with an airworthy bearing.

(iii) If there is damage on the lower side of the floor in the area of the assembly opening that extends through the panel outer layer (revealing an open honeycomb cell or layer), before further flight, replace the bearing with an airworthy bearing and repair the floor.

(2) After performing the actions in (e)(1)(i) through (iii) of this AD, before further flight, install a Teflon strip and identify the floor by following the Accomplishment Instructions, paragraphs 3.E.(1) through 3.E.(4), of the ASB.

(3) Within 100 hours TIS, modify and re-identify the rod as depicted in Figure 1 of the ASB and by following the Accomplishment Instructions, paragraphs 3.H.(1) through 3.H.(3)(f), of the ASB.

(f) Alternative Methods of Compliance (AMOCs)

(1) The Manager, Safety Management Group, FAA, may approve AMOCs for this AD. Send your proposal to: Matt Fuller, Senior Aviation Safety Engineer, Safety Management Group, Rotorcraft Directorate, FAA, 2601 Meacham Blvd., Fort Worth, Texas 76137; telephone (817) 222–5110; email *matthew.fuller@faa.gov.*

(2) For operations conducted under 14 CFR part 119 operating certificate or under 14 CFR part 91, subpart K, we suggest that you notify your principal inspector, or lacking a principal inspector, the manager of the local flight standards district office or certificate holding district office before operating any aircraft complying with this AD through an AMOC.

(g) Additional Information

The subject of this AD is addressed in European Aviation Safety Agency AD No. 2006–0318 R1, dated October 27, 2006, which you may view on the internet at *http://www.regulations.gov* in the AD docket.

(h) Subject

The Joint Aircraft System/Component (JASC) Code is 6720: Tail Rotor Control System.

(i) Material Incorporated by Reference

(1) The Director of the Federal Register approved the incorporation by reference (IBR) of the service information listed in this paragraph under 5 U.S.C. 552(a) and 1 CFR part 51.

(2) You must use this service information as applicable to do the actions required by this AD, unless the AD specifies otherwise.

(i) Eurocopter Alert Service Bulletin No. EC135–67A–012, Revision 1, dated October 18, 2006.

(ii) Reserved.

(3) For Eurocopter service information identified in this AD, contact American Eurocopter Corporation, 2701 N. Forum Drive, Grand Prairie, TX 75052, telephone (972) 641–0000 or (800) 232–0323, fax (972) 641–3775, or at *http://www.eurocopter.com/techpub.*

(4) You may view this service information at FAA, Office of the Regional Counsel, Southwest Region, 2601 Meacham Blvd., Room 663, Fort Worth, Texas 76137. For information on the availability of this material at the FAA, call (817) 222–5110.

(5) You may view this service information that is incorporated by reference at the National Archives and Records Administration (NARA). For information on the availability of this material at NARA, call (202) 741–6030, or go to: *http://*

www.archives.gov/federal-register/cfr/ibr-locations.html.

Issued in Fort Worth, Texas, on September 27, 2013.

Lance T. Gant,

Acting Directorate Manager, Rotorcraft Directorate, Aircraft Certification Service.

[FR Doc. 2013–25312 Filed 10–30–13; 8:45 am]

BILLING CODE 4910–13–P

DEPARTMENT OF TRANSPORTATION

Federal Aviation Administration

14 CFR Part 39

[Docket No. FAA–2013–0667; Directorate Identifier 2013–NM–062–AD; Amendment 39–17639; AD 2013–22–07]

RIN 2120–AA64

Airworthiness Directives; The Boeing Company Airplanes

AGENCY: Federal Aviation Administration (FAA), DOT.

ACTION: Final rule.

SUMMARY: We are adopting a new airworthiness directive (AD) for certain The Boeing Company Model 747–400 series airplanes. This AD was prompted by reports of fasteners missing on an airplane undergoing a passenger-to-freighter conversion. This AD requires doing a general visual inspection of the station 1920 splice clip for correct fastener installation, and related investigative and corrective actions if necessary. We are issuing this AD to detect and correct missing or incorrect fasteners, which can lead to cracking and loss of load carrying capacity, resulting in a possible decompression event.

DATES: This AD is effective December 5, 2013.

The Director of the Federal Register approved the incorporation by reference of a certain publication listed in this AD as of December 5, 2013.

ADDRESSES: For service information identified in this AD, contact Boeing Commercial Airplanes, Attention: Data & Services Management, P.O. Box 3707, MC 2H–65, Seattle, WA 98124–2207; telephone 206–544–5000, extension 1; fax 206–766–5680; Internet *https://www.myboeingfleet.com.* You may view this referenced service information at the FAA, Transport Airplane Directorate, 1601 Lind Avenue SW., Renton, WA. For information on the availability of this material at the FAA, call 425–227–1221.

Examining the AD Docket

You may examine the AD docket on the Internet at *http://www.regulations.gov;* or in person at the Docket Management Facility between 9 a.m. and 5 p.m., Monday through Friday, except Federal holidays. The AD docket contains this AD, the regulatory evaluation, any comments received, and other information. The address for the Docket Office (phone: 800–647–5527) is Document Management Facility, U.S. Department of Transportation, Docket Operations, M–30, West Building Ground Floor, Room W12–140, 1200 New Jersey Avenue SE., Washington, DC 20590.

FOR FURTHER INFORMATION CONTACT: Bill Ashforth, Aerospace Engineer, Airframe Branch, ANM–120S, FAA, Seattle Aircraft Certification Office, 1601 Lind Avenue SW., Renton, WA 98057–3356; phone: 425–917–6432; fax: 425–917–6590; email: *bill.ashforth@faa.gov.*

SUPPLEMENTARY INFORMATION:

Discussion

We issued a notice of proposed rulemaking (NPRM) to amend 14 CFR part 39 by adding an AD that would apply to the specified products. The NPRM published in the **Federal Register** on August 1, 2013 (78 FR 46540). The NPRM proposed to require doing a general visual inspection of the station 1920 splice clip for correct fastener installation, and related investigative and corrective actions if necessary.

Comments

We gave the public the opportunity to participate in developing this AD. We have considered the comment received. The Boeing Company supports the NPRM (78 FR 46540, August 1, 2013).

Conclusion

We reviewed the relevant data, considered the comment received, and determined that air safety and the public interest require adopting this AD as proposed—except for minor editorial changes. We have determined that these minor changes:

- Are consistent with the intent that was proposed in the NPRM (78 FR 46540, August 1, 2013) for correcting the unsafe condition; and
- Do not add any additional burden upon the public than was already proposed in the NPRM (78 FR 46540, August 1, 2013).

Costs of Compliance

We estimate that this AD affects 3 airplanes of U.S. registry.

We estimate the following costs to comply with this AD:

ESTIMATED COSTS

Action	Labor cost	Parts cost	Cost per product	Cost on U.S. operators
Inspection for correct fastener installation	2 work-hours × $85 per hour = $170	$0	$170	$510

We estimate the following costs to do any necessary repairs that would be required based on the results of the inspection. We have no way of determining the number of aircraft that might need these repairs:

ON-CONDITION COSTS

Action	Labor cost	Parts cost	Cost per product
Inspections for cracking	3 work-hours × $85 per hour = $255	$0	$255
Fastener installation	2 work-hours × $85 per hour = $170	0	170
Repair	2 work-hours × $85 per hour = $170	0	170

According to the manufacturer, some of the costs of this AD may be covered under warranty, thereby reducing the cost impact on affected individuals. We do not control warranty coverage for affected individuals. As a result, we

have included all costs in our cost estimate.

Authority for This Rulemaking

Title 49 of the United States Code specifies the FAA's authority to issue rules on aviation safety. Subtitle I, section 106, describes the authority of the FAA Administrator. Subtitle VII: Aviation Programs, describes in more detail the scope of the Agency's authority.

We are issuing this rulemaking under the authority described in Subtitle VII, Part A, Subpart III, Section 44701: ''General requirements.'' Under that section, Congress charges the FAA with promoting safe flight of civil aircraft in air commerce by prescribing regulations for practices, methods, and procedures the Administrator finds necessary for safety in air commerce. This regulation is within the scope of that authority because it addresses an unsafe condition that is likely to exist or develop on products identified in this rulemaking action.

Regulatory Findings

This AD will not have federalism implications under Executive Order 13132. This AD will not have a substantial direct effect on the States, on the relationship between the national government and the States, or on the distribution of power and responsibilities among the various levels of government.

For the reasons discussed above, I certify that this AD:

(1) Is not a ''significant regulatory action'' under Executive Order 12866,

(2) Is not a ''significant rule'' under DOT Regulatory Policies and Procedures (44 FR 11034, February 26, 1979),

(3) Will not affect intrastate aviation in Alaska, and

(4) Will not have a significant economic impact, positive or negative, on a substantial number of small entities under the criteria of the Regulatory Flexibility Act.

List of Subjects in 14 CFR Part 39

Air transportation, Aircraft, Aviation safety, Incorporation by reference, Safety.

Adoption of the Amendment

Accordingly, under the authority delegated to me by the Administrator, the FAA amends 14 CFR part 39 as follows:

PART 39—AIRWORTHINESS DIRECTIVES

■ 1. The authority citation for part 39 continues to read as follows:

Authority: 49 U.S.C. 106(g), 40113, 44701.

§ 39.13 [Amended]

■ 2. The FAA amends § 39.13 by adding the following new airworthiness directive (AD):

2013–22–07 The Boeing Company: Amendment 39–17639; Docket No. FAA–2013–0667; Directorate Identifier 2013–NM–062–AD.

(a) Effective Date

This AD is effective December 5, 2013.

(b) Affected ADs

None.

(c) Applicability

This AD applies to The Boeing Company Model 747–400 series airplanes, certificated in any category, as identified in Boeing Alert Service Bulletin 747–53A2844, Revision 1, dated July 30, 2012.

(d) Subject

Joint Aircraft System Component (JASC)/ Air Transport Association (ATA) of America Code 53, Fuselage.

(e) Unsafe Condition

This AD was prompted by reports of fasteners missing on an airplane undergoing a passenger-to-freighter conversion. We are issuing this AD to detect and correct missing or incorrect fasteners, which can lead to cracking and loss of load carrying capacity, resulting in a possible decompression event.

(f) Compliance

Comply with this AD within the compliance times specified, unless already done.

(g) Inspection

Except as required by paragraph (h)(1) of this AD, at the times specified in paragraph 1.E., ''Compliance,'' of Boeing Alert Service Bulletin 747–53A2844, Revision 1, dated July 30, 2012: Do a general visual inspection for correct installation of the station 1920 splice clip common to the auxiliary sill web and the tie clip, and do all applicable related investigative and corrective actions, in accordance with the Accomplishment Instructions of Boeing Alert Service Bulletin 747–53A2844, Revision 1, dated July 30, 2012, except as required by paragraph (h)(2) of this AD. Do all applicable related investigative and corrective actions before further flight.

(h) Exceptions to the Service Information

(1) Where Boeing Alert Service Bulletin 747–53A2844, Revision 1, dated July 30, 2012, specifies a compliance time ''after the original issue date of the service bulletin,'' this AD requires compliance within the specified compliance time after the effective date of this AD.

(2) If any cracking is found during any inspection required by this AD, and Boeing Alert Service Bulletin 747–53A2844, Revision 1, dated July 30, 2012, specifies contacting Boeing for appropriate action: Before further flight, repair using a method approved in accordance with the procedures specified in paragraph (j) of this AD.

(i) Credit for Previous Actions

This paragraph provides credit for actions required by paragraph (g) of this AD, if those actions were performed before the effective date of this AD using Boeing Alert Service Bulletin 747–53A2844, dated September 15, 2011, except the detailed inspection for cracking of the auxiliary sill outer chord tee and attached parts and all applicable related investigative and corrective actions must be done in accordance with Boeing Alert Service Bulletin 747–53A2844, Revision 1, dated July 30, 2012, at the times specified in paragraph (g) of this AD. Boeing Alert Service Bulletin 747–53A2844, dated September 15, 2011, is not incorporated by reference in this AD.

(j) Alternative Methods of Compliance (AMOCs)

(1) The Manager, Seattle Aircraft Certification Office (ACO), FAA, has the authority to approve AMOCs for this AD, if requested using the procedures found in 14 CFR 39.19. In accordance with 14 CFR 39.19, send your request to your principal inspector or local Flight Standards District Office, as appropriate. If sending information directly to the manager of the ACO, send it to the attention of the person identified in paragraph (k) of this AD. Information may be emailed to: *9-ANM-Seattle-ACO-AMOC-Requests@faa.gov.*

(2) Before using any approved AMOC, notify your appropriate principal inspector, or lacking a principal inspector, the manager of the local flight standards district office/ certificate holding district office.

(3) An AMOC that provides an acceptable level of safety may be used for any repair required by this AD if it is approved by the Boeing Commercial Airplanes Organization Designation Authorization (ODA) that has been authorized by the Manager, Seattle ACO to make those findings. For a repair method to be approved, the repair must meet the certification basis of the airplane, and the approval must specifically refer to this AD.

(k) Related Information

(1) For more information about this AD, contact Bill Ashforth, Aerospace Engineer, Airframe Branch, ANM–120S, FAA, Seattle Aircraft Certification Office, 1601 Lind Avenue SW., Renton, WA 98057–3356; phone: 425–917–6432; fax: 425–917–6590; email: *bill.ashforth@faa.gov.*

(2) Service information identified in this AD that is not incorporated by reference may be obtained at the addresses specified in paragraphs (i)(3) and (i)(4) of this AD.

(l) Material Incorporated by Reference

(1) The Director of the Federal Register approved the incorporation by reference (IBR) of the service information listed in this paragraph under 5 U.S.C. 552(a) and 1 CFR part 51.

(2) You must use this service information as applicable to do the actions required by this AD, unless the AD specifies otherwise.

(i) Boeing Alert Service Bulletin 747–53A2844, Revision 1, dated July 30, 2012.

(ii) Reserved.

(3) For service information identified in this AD, contact Boeing Commercial

Airplanes, Attention: Data & Services Management, P.O. Box 3707, MC 2H–65, Seattle, WA 98124–2207; telephone 206–544–5000, extension 1; fax 206–766–5680; Internet *https://www.myboeingfleet.com.*

(4) You may view this service information at FAA, Transport Airplane Directorate, 1601 Lind Avenue SW., Renton, WA. For information on the availability of this material at the FAA, call 425–227–1221.

(5) You may view this service information that is incorporated by reference at the National Archives and Records Administration (NARA). For information on the availability of this material at NARA, call 202–741–6030, or go to: *http://www.archives.gov/federal-register/cfr/ibr-locations.html.*

Issued in Renton, Washington, on October 17, 2013.

Jeffrey E. Duven,

Acting Manager, Transport Airplane Directorate, Aircraft Certification Service.

[FR Doc. 2013–25308 Filed 10–30–13; 8:45 am]

BILLING CODE 4910–13–P

DEPARTMENT OF TRANSPORTATION

Federal Aviation Administration

14 CFR Part 39

[Docket No. FAA–2013–0543; Directorate Identifier 2012–NM–202–AD; Amendment 39–17610; AD 2013–20–04]

RIN 2120–AA64

Airworthiness Directives; Airbus Airplanes

AGENCY: Federal Aviation Administration (FAA), Department of Transportation (DOT).

ACTION: Final rule.

SUMMARY: We are adopting a new airworthiness directive (AD) for all Airbus Model A318, A319, A320, and A321 series airplanes. This AD was prompted by a determination that certain special washers used in the bearing installation of the retraction jack anchorage fitting in the main landing gear (MLG) were incorrectly manufactured. This AD requires an inspection of the left-hand (LH) and right-hand (RH) bearing assemblies of the MLG retraction jack anchorage fitting to verify that the special washer is seated correctly, and related investigative and corrective actions if necessary. We are issuing this AD to detect and correct installation of incorrectly manufactured special washers, which could lead to a local stress concentration resulting in possible reduction of the fatigue life of the jack fitting, and consequent reduction of the structural integrity of the affected MLG.

DATES: This AD becomes effective December 5, 2013.

The Director of the Federal Register approved the incorporation by reference of certain publications listed in this AD as of December 5, 2013.

ADDRESSES: You may examine the AD on the Internet at *http://www.regulations.gov/#!docketDetail;D=FAA-2013-0543;* or in person at the U.S. Department of Transportation, Docket Operations, M–30, West Building Ground Floor, Room W12–140, 1200 New Jersey Avenue SE., Washington, DC.

For service information identified in this AD, contact Airbus, Airworthiness Office—EIAS, 1 Rond Point Maurice Bellonte, 31707 Blagnac Cedex, France; telephone +33 5 61 93 36 96; fax +33 5 61 93 44 51; email *account.airworth-eas@airbus.com;* Internet *http://www.airbus.com.* You may review copies of the referenced service information at the FAA, Transport Airplane Directorate, 1601 Lind Avenue SW., Renton, WA. For information on the availability of this material at the FAA, call 425–227–1221.

FOR FURTHER INFORMATION CONTACT: Sanjay Ralhan, Aerospace Engineer, International Branch, ANM–116, Transport Airplane Directorate, FAA, 1601 Lind Avenue SW., Renton, WA 98057–3356; telephone (425) 227–1405; fax (425) 227–1149.

SUPPLEMENTARY INFORMATION:

Discussion

We issued a notice of proposed rulemaking (NPRM) to amend 14 CFR part 39 to include an AD that would apply to the specified products. The NPRM published in the **Federal Register** on July 1, 2013 (78 FR 39190). The NPRM proposed to correct an unsafe condition for the specified products.

The European Aviation Safety Agency (EASA), which is the Technical Agent for the Member States of the European Community, has issued EASA Airworthiness Directive 2012–0223, dated October 23, 2012 (referred to after this as the Mandatory Continuing Airworthiness Information, or ''the MCAI''), to correct an unsafe condition for the specified products. The MCAI states:

> Airbus identified a batch of special washers, Part Number (P/N) D5725260120000 and P/N D5725664320000, which were incorrectly manufactured and delivered as spares from the supplier between October 2006 and January 2010. As a result of these manufacturing defects, the affected washers differ geometrically from the design specifications. The results of further analyses on Airbus A318, A319, A320 and A321 aeroplanes demonstrate that the affected washers could be seated incorrectly when installed on aeroplanes, which could affect the main landing gear (MLG) retraction jack anchorage fitting bearing installation.
>
> This condition, if not detected and corrected, could lead to a local stress concentration which may reduce the fatigue life of the jack fitting, possibly reducing the structural integrity of the affected MLG.
>
> For the reasons described above, this [EASA] AD requires a one-time detailed visual inspection of the left-hand (LH) and right-hand (RH) MLG retraction jack anchorage fitting bearing assemblies to verify that the special washer is seated correctly and, depending on findings, the accomplishment of applicable [related investigative action and] corrective actions.

The related investigative action is a detailed inspection of the jack anchorage fitting for damage, corrosion, cracks or other defects. Corrective actions include replacing the special washer with a new special washer and repairing the jack anchorage fitting if there are signs of damage, corrosion, or other defects. You may examine the MCAI in the AD docket on the Internet at *http://www.regulations.gov/#!documentDetail;D=FAA-2013-0543-0003.*

Comments

We gave the public the opportunity to participate in developing this AD. We considered the comment received. The commenter, Jeremy Schreck, supported the NPRM (78 FR 39190, July 1, 2013).

Conclusion

We reviewed the available data, including the comment received, and determined that air safety and the public interest require adopting this AD as proposed—except for minor editorial changes. We have determined that these minor changes:

- Are consistent with the intent that was proposed in the NPRM (78 FR 39190, July 1, 2013) for correcting the unsafe condition; and
- Do not add any additional burden upon the public than was already proposed in the NPRM (78 FR 39190, July 1, 2013).

Costs of Compliance

We estimate that this AD affects 851 airplanes of U.S. registry.

We estimate the following costs to comply with this AD:

ESTIMATED COSTS

Action	Labor cost	Parts cost	Cost per product	Cost on U.S. operators
Inspection	3 work-hours × $85 per hour = $255	$0	$255	$217,005

We estimate the following costs to do any necessary replacements that would be required based on the results of the initial inspection. We have no way of determining the number of aircraft that might need these replacements:

ON-CONDITION COSTS

Action	Labor cost	Parts cost	Cost per product
Inspection	15 work-hours × $85 per hour = $1,275	See the following statement	$1,275

We have received no definitive data that would enable us to provide part cost estimates for the on-condition actions specified in this AD. We have no way of determining the number of products that may need these actions.

Authority for This Rulemaking

Title 49 of the United States Code specifies the FAA's authority to issue rules on aviation safety. Subtitle I, section 106, describes the authority of the FAA Administrator. ''Subtitle VII: Aviation Programs,'' describes in more detail the scope of the Agency's authority.

We are issuing this rulemaking under the authority described in ''Subtitle VII, Part A, Subpart III, Section 44701: General requirements.'' Under that section, Congress charges the FAA with promoting safe flight of civil aircraft in air commerce by prescribing regulations for practices, methods, and procedures the Administrator finds necessary for safety in air commerce. This regulation is within the scope of that authority because it addresses an unsafe condition that is likely to exist or develop on products identified in this rulemaking action.

Regulatory Findings

We determined that this AD will not have federalism implications under Executive Order 13132. This AD will not have a substantial direct effect on the States, on the relationship between the national government and the States, or on the distribution of power and responsibilities among the various levels of government.

For the reasons discussed above, I certify that this AD:

1. Is not a ''significant regulatory action'' under Executive Order 12866;

2. Is not a ''significant rule'' under the DOT Regulatory Policies and Procedures (44 FR 11034, February 26, 1979);

3. Will not affect intrastate aviation in Alaska; and

4. Will not have a significant economic impact, positive or negative, on a substantial number of small entities under the criteria of the Regulatory Flexibility Act.

We prepared a regulatory evaluation of the estimated costs to comply with this AD and placed it in the AD docket.

Examining the AD Docket

You may examine the MCAI in the AD docket on the Internet at *http://www.regulations.gov/#!docketDetail;D=FAA-2013-0543;* or in person at the Docket Operations office between 9 a.m. and 5 p.m., Monday through Friday, except Federal holidays. The AD docket contains this AD, the MCAI, the regulatory evaluation, any comments received, and other information. The street address for the Docket Operations office (telephone (800) 647–5527) is in the **ADDRESSES** section.

List of Subjects in 14 CFR Part 39

Air transportation, Aircraft, Aviation safety, Incorporation by reference, Safety.

Adoption of the Amendment

Accordingly, under the authority delegated to me by the Administrator, the FAA amends 14 CFR part 39 as follows:

PART 39—AIRWORTHINESS DIRECTIVES

■ 1. The authority citation for part 39 continues to read as follows:

Authority: 49 U.S.C. 106(g), 40113, 44701.

§ 39.13 [Amended]

■ 2. The FAA amends § 39.13 by adding the following new AD:

2013–20–04 Airbus: Amendment 39–17610. Docket No. FAA–2013–0543; Directorate Identifier 2012–NM–202–AD.

(a) Effective Date

This airworthiness directive (AD) becomes effective December 5, 2013.

(b) Affected ADs

None.

(c) Applicability

This AD applies to the Airbus airplanes listed in paragraphs (c)(1), (c)(2), (c)(3), and (c)(4) of this AD, certificated in any category, all manufacturer serial numbers.

(1) Model A318–111, –112, –121, and –122 airplanes.

(2) Model A319–111, –112, –113, –114, –115, –131, –132, and –133 airplanes.

(3) Model A320–111, –211, –212, –214, –231, –232, and –233 airplanes.

(4) Model A321–111, –112, –131, –211, –212, –213, –231, and –232 airplanes.

(d) Subject

Air Transport Association (ATA) of America Code 57, Wings.

(e) Reason

This AD was prompted by a determination that certain special washers used in retraction jack anchorage fitting bearing installation in the main landing gear (MLG) were incorrectly manufactured. We are issuing this AD to detect and correct installation of incorrectly manufactured special washers, which could lead to a local stress concentration resulting in possible reduction of the fatigue life of the jack fitting, and consequent reduction of the structural integrity of the affected MLG.

(f) Compliance

You are responsible for having the actions required by this AD performed within the compliance times specified, unless the actions have already been done.

(g) Detailed Inspection

Within 21,300 flight cycles after August 1, 2006, or within 30 days after the effective date of this AD, whichever occurs later: Do a detailed inspection of the left-hand (LH) and right-hand (RH) bearing assemblies of the

MLG retraction jack anchorage fitting for correct installation, in accordance with the Accomplishment Instructions of Airbus Service Bulletin A320–57–1169, Revision 01, dated September 18, 2012, except as specified in paragraphs (i)(1) and (i)(2) of this AD.

Note 1 to paragraph (g) of this AD: The affected special washers having part number (P/N) D5725260120000 and P/N D5725664320000 were manufactured between October 2006 and January 2010.

(h) Related Investigative and Corrective Actions

If any special washer is found incorrectly seated during the inspection specified in paragraph (g) of this AD: Before further flight, do all applicable related investigative and corrective actions, in accordance with the Accomplishment Instructions of Airbus Service Bulletin A320–57–1169, Revision 01, dated September 18, 2012, except as specified in paragraph (i)(3) of this AD.

(i) Exceptions to Inspections and Service Information

(1) Airplanes on which Airbus Modification 39730 or Airbus Modification 150311 has been embodied in production, or on which Airbus Service Bulletin A320–57–1157 has been embodied in service, do not have to be inspected as required by paragraph (g) of this AD, unless a special washer having P/N D5725260120000 or P/N D5725664320000 has been installed since the airplane's first flight, or since modification as specified in Airbus Service Bulletin A320–57–1157, as applicable. A review of airplane maintenance records is acceptable to make this determination if the part numbers of the special washers and modification status can be conclusively determined from that review.

(2) Bearing assemblies for the MLG retraction jack anchorage fitting on which no special washer replacement has been accomplished after August 1, 2006; and bearing assemblies for the MLG retraction jack anchorage fitting on which a special washer replacement has been accomplished as specified in Task 57–26–13–400–001–A, Installation of the Bearing Assembly of the Forward Pintle Pin; Task 57–26–13–400–002–A, Installation of the Bearing Assembly of the MLG Actuator Attachment; and Task 57–26–13–400–004–A Installation of the Bearing Seals of the MLG Actuator Bearing Assembly; of Subject 57–26–13, Attachment—Main Landing Gear, of Chapter 57, Wings, of the Airbus A318/A319/A320/A321 Aircraft Maintenance Manual (AMM), Revision 50, dated November 1, 2012; do not have to be inspected as required by paragraph (g) of this AD. A review of airplane maintenance records is acceptable to make this determination if the status can be conclusively determined from that review.

(3) Where Airbus Service Bulletin A320–57–1169, Revision 01, dated September 18, 2012, specifies to contact Airbus and apply corrective action defined by Airbus: Before further flight, repair the jack anchorage fitting using a method approved by either the Manager, International Branch, ANM–116, Transport Airplane Directorate, FAA; or the European Aviation Safety Agency (EASA) (or its delegated agent).

(j) Parts Installation Limitations

As of the effective date of this AD, no person may install, on any airplane, a special washer having P/N D5725260120000 or P/N D5725664320000, unless it is installed in accordance with the Accomplishment Instructions of Airbus Service Bulletin A320–57–1169, Revision 01, dated September 18, 2012; or in accordance with the instructions specified in the tasks identified in paragraphs (j)(1), (j)(2), and (j)(3) of this AD.

(1) Airbus Task 57–26–13–400–001–A, Installation of the Bearing Assembly of the Forward Pintle Pin, in Subject 57–26–13, Attachment—Main Landing Gear, of Chapter 57, Wings, of the Airbus A318/A319/A320/A321 Aircraft Maintenance Manual (AMM), Revision 50, dated November 1, 2012.

(2) Airbus Task 57–26–13–400–002–A, Installation of the Bearing Assembly of the MLG Actuator Attachment, in Subject 57–26–13, Attachment—Main Landing Gear, of Chapter 57, Wings, of the Airbus A318/A319/A320/A321 AMM, Revision 50, dated November 1, 2012.

(3) Airbus Task 57–26–13–400–004–A Installation of the Bearing Seals of the MLG Actuator Bearing Assembly, in Subject 57–26–13, Attachment—Main Landing Gear, of Chapter 57, Wings, of the Airbus A318/A319/A320/A321 AMM, Revision 50, dated November 1, 2012.

(k) Credit for Previous Actions

This paragraph provides credit for actions required by paragraph (g) of this AD, if those actions were performed before the effective date of this AD using Airbus Service Bulletin A320–57–1169, dated January 10, 2012, which is not incorporated by reference in this AD.

(l) Other FAA AD Provisions

The following provisions also apply to this AD:

(1) *Alternative Methods of Compliance (AMOCs):* The Manager, International Branch, ANM–116, Transport Airplane Directorate, FAA, has the authority to approve AMOCs for this AD, if requested using the procedures found in 14 CFR 39.19. In accordance with 14 CFR 39.19, send your request to your principal inspector or local Flight Standards District Office, as appropriate. If sending information directly to the International Branch, send it to ATTN: Sanjay Ralhan, Aerospace Engineer, International Branch, ANM–116, Transport Airplane Directorate, FAA, 1601 Lind Avenue SW., Renton, WA 98057–3356; telephone (425) 227–1405; fax (425) 227–1149. Information may be emailed to: *9-ANM-116-AMOC-REQUESTS@faa.gov.* Before using any approved AMOC, notify your appropriate principal inspector, or lacking a principal inspector, the manager of the local flight standards district office/certificate holding district office. The AMOC approval letter must specifically reference this AD.

(2) *Airworthy Product:* For any requirement in this AD to obtain corrective actions from a manufacturer or other source, use these actions if they are FAA-approved. Corrective actions are considered FAA-approved if they are approved by the State of Design Authority (or their delegated agent). You are required to assure the product is airworthy before it is returned to service.

(m) Related Information

(1) Refer to Mandatory Continuing Airworthiness Information European Aviation Safety Agency Airworthiness Directive 2012–0223, dated October 23, 2012, for related information. You may examine the MCAI in the AD docket on the Internet at *http://www.regulations.gov/#!documentDetail;D=FAA-2013-0543-0003.*

(2) Service information identified in this AD that is not incorporated by reference may be obtained at the addresses specified in paragraphs (n)(3) and (n)(4) of this AD.

(n) Material Incorporated by Reference

(1) The Director of the Federal Register approved the incorporation by reference (IBR) of the service information listed in this paragraph under 5 U.S.C. 552(a) and 1 CFR part 51.

(2) You must use this service information as applicable to do the actions required by this AD, unless this AD specifies otherwise.

(i) Airbus Service Bulletin A320–57–1169, Revision 01, dated September 18, 2012.

(ii) Airbus Task 57–26–13–400–001–A, Installation of the Bearing Assembly of the Forward Pintle Pin in Subject 57–26–13, of Chapter 57, Wings, of the Airbus A318/A319/A320/A321 Aircraft Maintenance Manual, Revision 50, dated November 1, 2012.

(iii) Airbus Task 57–26–13–400–002–A, Installation of the Bearing Assembly of the MLG Actuator Attachment in Subject 57–26–13, of Chapter 57, Wings, of the Airbus A318/A319/A320/A321 Aircraft Maintenance Manual, Revision 50, dated November 1, 2012.

(iv) Airbus Task 57–26–13–400–004–A, Installation of the Bearing Seals of the MLG Actuator Bearing Assembly in Subject 57–26–13, of Chapter 57, Wings, of the Airbus A318/A319/A320/A321 Aircraft Maintenance Manual, Revision 50, dated November 1, 2012.

(3) For service information identified in this AD, contact Airbus, Airworthiness Office—EIAS, 1 Rond Point Maurice Bellonte, 31707 Blagnac Cedex, France; telephone +33 5 61 93 36 96; fax +33 5 61 93 44 51; email *account.airworth-eas@airbus.com;* Internet *http://www.airbus.com.*

(4) You may review copies of the service information at the FAA, Transport Airplane Directorate, 1601 Lind Avenue SW., Renton, WA. For information on the availability of this material at the FAA, call 425–227–1221.

(5) You may view this service information that is incorporated by reference at the National Archives and Records Administration (NARA). For information on the availability of this material at NARA, call 202–741–6030, or go to: *http://www.archives.gov/federal-register/cfr/ibr-locations.html.*

Issued in Renton, Washington, on September 19, 2013.

Ross Landes,

Acting Manager, Transport Airplane Directorate, Aircraft Certification Service.

[FR Doc. 2013–23905 Filed 10–30–13; 8:45 am]

BILLING CODE 4910–13–P

DEPARTMENT OF TRANSPORTATION

Federal Aviation Administration

14 CFR Part 39

[Docket No. FAA–2012–1311; Directorate Identifier 2011–NM–204–AD; Amendment 39–17636; AD 2013–22–04]

RIN 2120–AA64

Airworthiness Directives; Bombardier, Inc. Airplanes

AGENCY: Federal Aviation Administration (FAA), Department of Transportation (DOT).

ACTION: Final rule.

SUMMARY: We are adopting a new airworthiness directive (AD) for certain Bombardier, Inc. Model DHC–8–102, –103, and –106 airplanes; and Model DHC–8–200, –300, and –400 series airplanes. This AD was prompted by reports of excessive wear found in the clevis (bolt) hole where the rod assembly attaches to the rudder/brake pedal bellcrank, due to prolonged fretting. This AD requires measuring the bellcrank clevis holes, inspecting for cracking of the bellcrank, and re-working the clevis holes with steel bushings, or replacing the bellcrank. We are issuing this AD to detect and correct a worn or cracked clevis hole, which could cause failure of the bellcrank on one side, with subsequent asymmetric braking and consequent runway excursion.

DATES: This AD becomes effective December 5, 2013.

The Director of the Federal Register approved the incorporation by reference of certain publications listed in this AD as of December 5, 2013.

ADDRESSES: You may examine the AD docket on the Internet at *http://www.regulations.gov/#!docketDetail;D=FAA-2012-1311;* or in person at the U.S. Department of Transportation, Docket Operations, M–30, West Building Ground Floor, Room W12–140, 1200 New Jersey Avenue SE., Washington, DC.

For service information identified in this AD, contact Bombardier, Inc., Q-Series Technical Help Desk, 123 Garratt Boulevard, Toronto, Ontario M3K 1Y5, Canada; telephone 416–375–4000; fax 416–375–4539; email *thd.qseries@aero.bombardier.com;* Internet *http://www.bombardier.com.* You may view this referenced service information at the FAA, Transport Airplane Directorate, 1601 Lind Avenue SW., Renton, WA. For information on the availability of this material at the FAA, call 425–227–1221.

FOR FURTHER INFORMATION CONTACT: Luke Walker, Aerospace Engineer, Airframe and Mechanical Systems Branch, ANE–171, FAA, New York Aircraft Certification Office, 1600 Stewart Avenue, Suite 410, Westbury, New York 11590; telephone (516) 228–7363; fax (516) 794–5531.

SUPPLEMENTARY INFORMATION:

Discussion

We issued a notice of proposed rulemaking (NPRM) to amend 14 CFR part 39 by adding an AD that would apply to the specified products. The NPRM was published in the **Federal Register** on December 26, 2012 (77 FR 75906). The NPRM proposed to correct an unsafe condition for the specified products. Transport Canada Civil Aviation (TCCA), which is the aviation authority for Canada, issued Canadian Airworthiness Directive CF–2011–32, dated August 15, 2011 (referred to after this as the Mandatory Continuing Airworthiness Information, or ''the MCAI''), to correct an unsafe condition for the specified products. The MCAI states:

> There have been several in-service reports of excessive wear found in the bolt [clevis] hole where the rod assembly, Part Numbers (P/N) 82710795–001 or 82710024–003, is attached to the rudder/brake pedal bellcrank. An investigation revealed that the wear was attributed to prolonged fretting.
>
> Failure of the bellcrank on one side could lead to asymmetric braking and may lead to runway excursion.
>
> This [Canadian] directive mandates [measuring clevis holes for length, and, for certain bellcranks, doing a liquid penetrant inspection for cracking, and] the re-work [by installing steel bushings] or replacement of each bellcrank, P/N 82710022–001/–002, 82710029–001/–002, 82710813–001/–002 and 82710814–001/–002, found with a worn [or cracked] bolt hole.

You may examine the MCAI in the AD docket on the Internet at *http://www.regulations.gov/#!documentDetail;D=FAA-2012-1311-0002.*

Revised Service Information

Bombardier, Inc. has issued Service Bulletin 84–27–55, Revision A, dated February 22, 2012. The NPRM (77 FR 75906, December 26, 2012) referred to Bombardier Service Bulletin 84–27–55, dated June 15, 2011, in paragraphs (h) and (i) of the NPRM. In this final rule, we have revised the service bulletin references in those paragraphs accordingly, and have added new paragraph (j) to this final rule to give credit for actions done before the effective date of this AD in accordance with Bombardier Service Bulletin 84–27–55, dated June 15, 2011 (and redesignated subsequent paragraphs accordingly).

Comments

We gave the public the opportunity to participate in developing this AD. We have considered the comments received.

Request To Allow Use of Serviceable Parts

An anonymous commenter requested that the references to ''new bellcrank'' in the NPRM (77 FR 75906, December 26, 2012) be changed to allow operators to install ''serviceable'' bellcranks (new bellcranks or ones that have been modified according to the applicable service information), thus giving equal safety, yet providing more flexibility and less recordkeeping for operators.

We agree with the commenter's request for the reasons given. We have revised paragraphs (g)(2), (h)(2), (h)(3), (h)(4), (i)(2), (i)(3), and (i)(4) of this AD by specifying to replace the bellcrank with a new bellcrank ''or with a serviceable bellcrank with bushings having part number 82710297–101 installed.'' We have also clarified paragraphs (h)(1) and (i)(1) of this final rule by specifying to replace the bellcrank ''with a new or with a serviceable bellcrank with bushings having part number 82710297–101 installed.''

Request To Add Eddy Current Inspection Option

The same anonymous commenter requested that we include an eddy current inspection option in this final rule to agree with parallel actions specified in Bombardier Service Bulletin 84–27–55, Revision A, dated February 22, 2012.

We agree with the commenter's request because Bombardier added that inspection option in Bombardier Service Bulletin 84–27–55, Revision A, dated February 22, 2012. Accordingly, we have added the option in paragraphs (h) and (i) of this final rule.

Request To Clarify Compliance Times

The same anonymous commenter, in an incomplete request, stated that the replacement times in paragraph (h) of the NPRM (77 FR 75906, December 26, 2012) do not sufficiently remove the identified unsafe condition. From the truncated statement, we cannot infer what part of paragraph (h) the commenter requested that we change. We have made no change to this final rule in this regard.

Conclusion

We reviewed the available data, including the comments received, and

determined that air safety and the public interest require adopting this AD with the changes described previously and minor editorial changes. We have determined that these changes:

• Are consistent with the intent that was proposed in the NPRM (77 FR 75906, December 26, 2012) for correcting the unsafe condition; and

• Do not add any additional burden upon the public than was already proposed in the NPRM (77 FR 75906, December 26, 2012).

Costs of Compliance

We estimate that this AD will affect 178 products of U.S. registry. We also estimate that it will take 5 work-hours per product to comply with the basic requirements of this AD. The average labor rate is $85 per work-hour. Based on these figures, we estimate the cost of this AD to the U.S. operators to be $75,650, or $425 per product.

In addition, we estimate that any necessary follow-on actions would take about 16 work-hours and require parts costing up to $2,532, for a cost of $3,892 per product. Where the service information lists required parts costs that are covered under warranty, we have assumed that there will be no charge for these parts. As we do not control warranty coverage for affected parties, some parties may incur costs higher than estimated here. We have no way of determining the number of products that may need these actions.

Authority for This Rulemaking

Title 49 of the United States Code specifies the FAA's authority to issue rules on aviation safety. Subtitle I, section 106, describes the authority of the FAA Administrator. ''Subtitle VII: Aviation Programs,'' describes in more detail the scope of the Agency's authority.

We are issuing this rulemaking under the authority described in ''Subtitle VII, Part A, Subpart III, Section 44701: General requirements.'' Under that section, Congress charges the FAA with promoting safe flight of civil aircraft in air commerce by prescribing regulations for practices, methods, and procedures the Administrator finds necessary for safety in air commerce. This regulation is within the scope of that authority because it addresses an unsafe condition that is likely to exist or develop on products identified in this rulemaking action.

Regulatory Findings

We determined that this AD will not have federalism implications under Executive Order 13132. This AD will not have a substantial direct effect on the States, on the relationship between the national government and the States, or on the distribution of power and responsibilities among the various levels of government.

For the reasons discussed above, I certify that this AD:

1. Is not a ''significant regulatory action'' under Executive Order 12866;

2. Is not a ''significant rule'' under the DOT Regulatory Policies and Procedures (44 FR 11034, February 26, 1979);

3. Will not affect intrastate aviation in Alaska; and

4. Will not have a significant economic impact, positive or negative, on a substantial number of small entities under the criteria of the Regulatory Flexibility Act.

We prepared a regulatory evaluation of the estimated costs to comply with this AD and placed it in the AD docket.

Examining the AD Docket

You may examine the MCAI in the AD docket on the Internet at *http://www.regulations.gov/#!documentDetail;D=FAA-2012-1311-0002;* or in person at the Docket Operations office between 9 a.m. and 5 p.m., Monday through Friday, except Federal holidays. The AD docket contains this AD, the MCAI, the regulatory evaluation, any comments received, and other information. The street address for the Docket Operations office (telephone (800) 647–5527) is in the **ADDRESSES** section.

List of Subjects in 14 CFR Part 39

Air transportation, Aircraft, Aviation safety, Incorporation by reference, Safety.

Adoption of the Amendment

Accordingly, under the authority delegated to me by the Administrator, the FAA amends 14 CFR part 39 as follows:

PART 39—AIRWORTHINESS DIRECTIVES

■ 1. The authority citation for part 39 continues to read as follows:

Authority: 49 U.S.C. 106(g), 40113, 44701.

§ 39.13 [Amended]

■ 2. The FAA amends § 39.13 by adding the following new AD:

2013–22–04 Bombardier, Inc.: Amendment 39–17636. Docket No. FAA–2012–1311; Directorate Identifier 2011–NM–204–AD.

(a) Effective Date

This airworthiness directive (AD) becomes effective December 5, 2013.

(b) Affected ADs

None.

(c) Applicability

This AD applies to Bombardier, Inc. airplanes, certificated in any category, as specified in paragraphs (c)(1) and (c)(2) of this AD.

(1) Model DHC–8–102, –103, –106, –201, –202, –301, –311, and –315 airplanes: Serial numbers 003 through 672 inclusive.

(2) Model DHC–8–400, –401, and –402 airplanes: Serial numbers 4003 through 4372 inclusive.

(d) Subject

Air Transport Association (ATA) of America Code 27: Flight controls.

(e) Reason

This AD was prompted by reports of excessive wear found in the clevis (bolt) hole where the rod assembly attaches to the rudder/brake pedal bellcrank, due to prolonged fretting. We are issuing this AD to detect and correct a worn or cracked clevis hole, which could cause failure of the bellcrank on one side, with subsequent asymmetric braking and consequent runway excursion.

(f) Compliance

You are responsible for having the actions required by this AD performed within the compliance times specified, unless the actions have already been done.

(g) Actions for Model DHC–8–100, –200, and –300 Series Airplanes

For Model DHC–8–102, –103, –106, –201, –202, –301, –311, and –315 airplanes: Within 6,000 flight hours or 24 months after the effective date of this AD, whichever occurs first, inspect each bellcrank for cracking using liquid penetrant, in accordance with the Accomplishment Instructions of Bombardier Service Bulletin 8–27–111, dated June 15, 2011.

(1) If no cracking is found: Before further flight, rework the bellcrank, in accordance with the Accomplishment Instructions of Bombardier Service Bulletin 8–27–111, dated June 15, 2011.

(2) If any clevis hole is greater than 0.218 inch (measured edge-to-edge), or if any cracking is found: Before further flight, replace the bellcrank with a new bellcrank, or with a serviceable bellcrank with bushings having part number 82710297–101 installed, in accordance with the Accomplishment Instructions of Bombardier Service Bulletin 8–27–111, dated June 15, 2011.

(h) Actions for Certain Model DHC–8–400 Series Airplanes

For Model DHC–8–400, –401, and –402 airplanes that have accumulated less than or equal to 15,000 total flight hours as of the effective date of this AD: Within 6,000 flight hours after the effective date of this AD, but not to exceed 15,600 total flight hours, measure the edge-to-edge length of the clevis holes of each bellcrank, and inspect each bellcrank for cracking using liquid penetrant or eddy current inspection method; in accordance with the Accomplishment Instructions of Bombardier Service Bulletin 84–27–55, Revision A, dated February 22, 2012.

(1) If no cracking is found, and the edge-to-edge length of all clevis holes is less than or equal to 0.218 inch: Within 6,000 flight hours after the effective date of this AD, but not to exceed 15,600 total flight hours, rework the bellcrank, or replace the bellcrank with a new bellcrank or with a serviceable bellcrank with bushings having part number 82710297–101 installed, in accordance with the Accomplishment Instructions of Bombardier Service Bulletin 84–27–55, Revision A, dated February 22, 2012.

(2) If no cracking is found, and any clevis hole edge-to-edge length is greater than 0.218 inch, but is less than or equal to 0.248 inch: Within 6,000 flight hours after the effective date of this AD, replace the bellcrank with a new bellcrank, or with a serviceable bellcrank with bushings having part number 82710297–101 installed, in accordance with the Accomplishment Instructions of Bombardier Service Bulletin 84–27–55, Revision A, dated February 22, 2012.

(3) If no cracking is found, and any clevis hole edge-to-edge length is greater than 0.248 inch, but is less than or equal to 0.278 inch: Within 1,200 flight hours after doing the measurement/inspection required by paragraph (h) of this AD, replace the bellcrank with a new bellcrank, or with a serviceable bellcrank with bushings having part number 82710297–101 installed, in accordance with the Accomplishment Instructions of Bombardier Service Bulletin 84–27–55, Revision A, dated February 22, 2012.

(4) If any cracking is found, or if any clevis hole edge-to-edge length exceeds 0.278 inch: Before further flight, replace the bellcrank with a new bellcrank, or with a serviceable bellcrank with bushings having part number 82710297–101 installed, in accordance with the Accomplishment Instructions of Bombardier Service Bulletin 84–27–55, Revision A, dated February 22, 2012.

(i) Actions for Certain Other Model DHC–8–400 Series Airplanes

For Model DHC–8–400, –401, and –402 airplanes that have accumulated more than 15,000 total flight hours as of the effective date of this AD: Within 600 flight hours after the effective date of this AD, measure the edge-to-edge length of the clevis holes of each bellcrank, and inspect each bellcrank for cracking using liquid penetrant or eddy current inspection method; in accordance with the Accomplishment Instructions of Bombardier Service Bulletin 84–27–55, Revision A, dated February 22, 2012.

(1) If no cracking is found, and the edge-to-edge length of all clevis holes is less than or equal to 0.218 inch: Within 1,200 flight hours after the effective date of this AD, rework the bellcrank, or replace the bellcrank with a new bellcrank or with a serviceable bellcrank with bushings having part number 82710297–101 installed, in accordance with the Accomplishment Instructions of Bombardier Service Bulletin 84–27–55, Revision A, dated February 22, 2012.

(2) If no cracking is found, and any clevis hole edge-to-edge length is greater than 0.218, inch but is less than or equal to 0.248 inch: Within 6,000 flight hours after the effective date of this AD, replace the bellcrank with a new bellcrank, or with a serviceable bellcrank with bushings having part number 82710297–101 installed, in accordance with the Accomplishment Instructions of Bombardier Service Bulletin 84–27–55, Revision A, dated February 22, 2012.

(3) If no cracking is found, and any clevis hole edge-to-edge length is greater than 0.248 inch, but is less than or equal to 0.278 inch: Within 1,200 flight hours after the effective date of this AD, replace the bellcrank with a new bellcrank, or with a serviceable bellcrank with bushings having part number 82710297–101 installed, in accordance with the Accomplishment Instructions of Bombardier Service Bulletin 84–27–55, Revision A, dated February 22, 2012.

(4) If any cracking is found, or any clevis hole edge-to-edge length exceeds 0.278 inch: Before further flight, replace the bellcrank with a new bellcrank, or with a serviceable bellcrank with bushings having part number 82710297–101 installed, in accordance with the Accomplishment Instructions of Bombardier Service Bulletin 84–27–55, Revision A, dated February 22, 2012.

(j) Credit for Previous Actions

This paragraph provides credit for the actions specified in paragraphs (h) and (i) of this AD, if those actions were performed before the effective date of this AD using the Accomplishment Instructions of Bombardier Service Bulletin 84–27–55, dated June 15, 2011.

(k) Other FAA AD Provisions

The following provisions also apply to this AD:

(1) *Alternative Methods of Compliance (AMOCs):* The Manager, New York Aircraft Certification Office (ACO), ANE–170, FAA, has the authority to approve AMOCs for this AD, if requested using the procedures found in 14 CFR 39.19. In accordance with 14 CFR 39.19, send your request to your principal inspector or local Flight Standards District Office, as appropriate. If sending information directly to the ACO, send it to ATTN: Program Manager, Continuing Operational Safety, FAA, New York ACO, 1600 Stewart Avenue, Suite 410, Westbury, New York 11590; telephone (516) 228–7300; fax (516) 794–5531. Before using any approved AMOC, notify your appropriate principal inspector, or lacking a principal inspector, the manager of the local flight standards district office/certificate holding district office. The AMOC approval letter must specifically reference this AD.

(2) *Airworthy Product:* For any requirement in this AD to obtain corrective actions from a manufacturer or other source, use these actions if they are FAA-approved. Corrective actions are considered FAA-approved if they are approved by the State of Design Authority (or their delegated agent). You are required to assure the product is airworthy before it is returned to service.

(l) Related Information

(1) Refer to Mandatory Continuing Airworthiness Information (MCAI) Canadian Airworthiness Directive CF–2011–32, dated August 15, 2011, for related information. The MCAI can be found in the AD docket on the Internet at *http://www.regulations.gov/#!documentDetail;D=FAA-2012-1311-0002.*

(2) Service information identified in this AD that is not incorporated by reference may be obtained at the addresses specified in paragraphs (m)(3) and (m)(4) of this AD.

(m) Material Incorporated by Reference

(1) The Director of the Federal Register approved the incorporation by reference (IBR) of the service information listed in this paragraph under 5 U.S.C. 552(a) and 1 CFR part 51.

(2) You must use this service information as applicable to do the actions required by this AD, unless the AD specifies otherwise.

(i) Bombardier Service Bulletin 8–27–111, dated June 15, 2011.

(ii) Bombardier Service Bulletin 84–27–55, Revision A, dated February 22, 2012.

(3) For service information identified in this AD, contact Bombardier, Inc., Q-Series Technical Help Desk, 123 Garratt Boulevard, Toronto, Ontario M3K 1Y5, Canada; telephone 416–375–4000; fax 416–375–4539; email *thd.qseries@aero.bombardier.com;* Internet *http://www.bombardier.com.*

(4) You may review copies of the service information at the FAA, Transport Airplane Directorate, 1601 Lind Avenue SW., Renton, WA. For information on the availability of this material at the FAA, call 425–227–1221.

(5) You may view this service information that is incorporated by reference at the National Archives and Records Administration (NARA). For information on the availability of this material at NARA, call 202–741–6030, or go to: *http://www.archives.gov/federal-register/cfr/ibr-locations.html.*

Issued in Renton, Washington, on September 30, 2013.

Jeffrey E. Duven,

Acting Manager, Transport Airplane Directorate, Aircraft Certification Service.

[FR Doc. 2013–25305 Filed 10–30–13; 8:45 am]

BILLING CODE 4910–13–P

DEPARTMENT OF TRANSPORTATION

Federal Aviation Administration

14 CFR Part 39

[Docket No. FAA–2013–0526; Directorate Identifier 2008–SW–14–AD; Amendment 39–17633; AD 2013–22–01]

RIN 2120–AA64

Airworthiness Directives; Bell Helicopter Textron Canada (Bell) Helicopters

AGENCY: Federal Aviation Administration (FAA), DOT.

ACTION: Final rule.

SUMMARY: We are adopting a new airworthiness directive (AD) for Bell Model 206L–4 and 407 helicopters. This AD requires replacing or reworking certain aft bearing caps. This AD was

prompted by the manufacture of certain freewheel aft bearing caps without a lubrication channel to allow oil flow into the aft bearing support assembly. The actions of this AD are intended to prevent failure of the freewheel unit and subsequent loss of control of the helicopter.

DATES: This AD is effective December 5, 2013.

The Director of the Federal Register approved the incorporation by reference of certain documents listed in this AD as of December 5, 2013.

ADDRESSES: For service information identified in this AD, contact Bell Helicopter Textron, Inc., P.O. Box 482, Fort Worth, Texas 76101, telephone (817) 280–3391, fax (817) 280–6466. You may review the referenced service information at the FAA, Office of the Regional Counsel, Southwest Region, 2601 Meacham Blvd., Room 663, Fort Worth, Texas 76137.

Examining the AD Docket

You may examine the AD docket on the Internet at *http://www.regulations.gov* or in person at the Docket Operations Office between 9 a.m. and 5 p.m., Monday through Friday, except Federal holidays. The AD docket contains this AD, the Transport Canada Civil Aviation (TCCA) AD, any incorporated-by-reference service information, the economic evaluation, any comments received, and other information. The street address for the Docket Operations Office (phone: 800–647–5527) is U.S. Department of Transportation, Docket Operations Office, M–30, West Building Ground Floor, Room W12–140, 1200 New Jersey Avenue SE., Washington, DC 20590.

FOR FURTHER INFORMATION CONTACT: Eric Haight, Aviation Safety Engineer, FAA, Rotorcraft Directorate, Regulations and Policy Group, Fort Worth, Texas 76137, telephone (817) 222–5110, email: *eric.haight@faa.gov*.

SUPPLEMENTARY INFORMATION:

Discussion

On June 20, 2013, at 78 FR 37158, the **Federal Register** published our notice of proposed rulemaking (NPRM), which proposed to amend 14 CFR part 39 to add an AD that would apply to Bell Model 206L–4 and 407 helicopters. The NPRM proposed to require, within 50 hours time-in-service (TIS), removing and disassembling the freewheel assembly, replacing the sprag, retainer, and the aft seal, and visually inspecting the remaining freewheel part details for a missing channel. Also, the NPRM proposed to require, if the channel is missing, before further flight, replacing the cap assembly with an airworthy cap or reworking and reidentifying the existing cap by using a vibrating stylus to add the letter ''R'' to the serial number of the reworked cap. The proposed actions were prompted by the manufacture of certain freewheel aft bearing caps without a lubrication channel to allow oil flow into the aft bearing support assembly. The proposed requirements were intended to prevent failure of the freewheel unit and subsequent loss of control of the helicopter.

The NPRM was prompted by AD No. CF–2004–17R1, dated February 11, 2005 (AD No. CF–2004–17R1), issued by TCAA, which is the aviation authority for Canada. AD No. CF–2004–17R1 requires replacing or reworking freewheel assemblies on the Bell Model 206L–4 and 407 helicopters. TCAA advises of a manufacturing oversight where a lubrication channel was not machined into the aft bearing cap of some freewheel units to allow oil flow into the aft bearing support assembly. TCAA states that lack of lubrication may adversely affect the durability and potentially the function of the freewheel unit.

Comments

We gave the public the opportunity to participate in developing this AD, but we did not receive any comments on the NPRM (78 FR 37158, June 20, 2013).

FAA's Determination

These helicopters have been approved by the aviation authority of Canada and are approved for operation in the United States. Pursuant to our bilateral agreement with Canada, TCAA, its technical representative, has notified us of the unsafe condition described in its AD. We are issuing this AD because we evaluated all information provided by TCAA and determined the unsafe condition exists and is likely to exist or develop on other helicopters of these same type designs and that air safety and the public interest require adopting the AD requirements as proposed.

Differences Between This AD and the TCAA AD

This AD differs from the TCAA AD as follows:

- We do not use a calendar time, which has already passed.
- We require all affected helicopters to comply within 50 hours TIS; the TCAA AD has different compliance times as stipulated by the calculated average engine start cycle count identified in the applicable alert service bulletin (ASB), and a 300-hour TIS terminating action for modifying all affected helicopters.
- We do not require referencing compliance with the ASBs as does the TCAA AD, and we do not require you to provide an affected cap for rework to Bell Tennessee nor require the original cap to be reworked by Bell Tennessee.
- We do not require any action on ''spare'' parts not installed on a helicopter but would require, before installing any replacement bearing support assembly, ensuring that the rework has been done.

Related Service Information

Bell has issued ASB No. 206L–04–129 for the Model 206L–4 and ASB No. 407–04–66 for the Model 407, both Revision A, and both dated December 1, 2004, which specify identifying the affected freewheel aft bearing caps. The ASBs provide separate procedures, depending on whether helicopters are ''not exclusively used for training'' or ''exclusively used for training,'' for replacing or reworking the freewheel cap assembly and replacing the output shaft, part number (P/N) 406–040–517–101, and sprag and retainer, P/N 406–040–580–103. TCCA classified these ASBs as mandatory and issued AD No. CF–2004–17R to ensure the continued airworthiness of these helicopters.

Costs of Compliance

We estimate there are 212 Model 206L–4 helicopters and 540 Model 407 helicopters of U.S. registry; however, we estimate that only 80 helicopters are affected by this AD. We estimate that operators may incur the following costs in order to comply with this AD: It will take about 16 work hours to replace the freewheel unit for all the affected parts at an average labor rate of $85 per work hour. Required parts will cost about $21,600 per helicopter. Based on these figures, we estimate the total cost per helicopter will be $22,900, and the total cost of the AD on U.S. operators will be $1,836,800.

Authority for This Rulemaking

Title 49 of the United States Code specifies the FAA's authority to issue rules on aviation safety. Subtitle I, section 106, describes the authority of the FAA Administrator. Subtitle VII: Aviation Programs, describes in more detail the scope of the Agency's authority.

We are issuing this rulemaking under the authority described in Subtitle VII, Part A, Subpart III, Section 44701: ''General requirements.'' Under that section, Congress charges the FAA with promoting safe flight of civil aircraft in air commerce by prescribing regulations

for practices, methods, and procedures the Administrator finds necessary for safety in air commerce. This regulation is within the scope of that authority because it addresses an unsafe condition that is likely to exist or develop on helicopters identified in this rulemaking action.

Regulatory Findings

This AD will not have federalism implications under Executive Order 13132. This AD will not have a substantial direct effect on the States, on the relationship between the national government and the States, or on the distribution of power and responsibilities among the various levels of government.

For the reasons discussed above, I certify that this AD:

(1) Is not a ''significant regulatory action'' under Executive Order 12866;

(2) Is not a ''significant rule'' under DOT Regulatory Policies and Procedures (44 FR 11034, February 26, 1979);

(3) Will not affect intrastate aviation in Alaska to the extent that it justifies making a regulatory distinction; and

(4) Will not have a significant economic impact, positive or negative, on a substantial number of small entities under the criteria of the Regulatory Flexibility Act.

We prepared an economic evaluation of the estimated costs to comply with this AD and placed it in the AD docket.

List of Subjects in 14 CFR Part 39

Air transportation, Aircraft, Aviation safety, Incorporation by reference, Safety.

Adoption of the Amendment

Accordingly, under the authority delegated to me by the Administrator, the FAA amends 14 CFR part 39 as follows:

PART 39—AIRWORTHINESS DIRECTIVES

■ 1. The authority citation for part 39 continues to read as follows:

Authority: 49 U.S.C. 106(g), 40113, 44701.

§ 39.13 [Amended]

■ 2. The FAA amends § 39.13 by adding the following new airworthiness directive (AD):

2013–22–01 Bell Helicopter Textron Canada: Amendment 39–17633; Docket No. FAA–2013–0526; Directorate Identifier 2008–SW–14–AD.

(a) Applicability

This AD applies to Model 206L–4 and 407 helicopters, with a freewheel aft bearing cap (cap), part number (P/N) 406–040–509–101, with a serial number with a prefix of ''A-'' and Nos. 1833 through 1912, installed, certificated in any category.

(b) Unsafe Condition

This AD defines the unsafe condition as certain caps being manufactured without a lubrication channel to allow oil flow into the aft bearing support assembly, which could result in failure of the freewheel unit and subsequent loss of control of the helicopter.

(c) Effective Date

This AD becomes effective December 5, 2013.

(d) Compliance

You are responsible for performing each action required by this AD within the specified compliance time unless it has already been accomplished prior to that time.

(e) Required Actions

Within 50 hours time-in-service (TIS):

(1) Remove and disassemble each freewheel assembly.

(2) Replace the sprag and retainer (item 7), the output shaft (item 10), and the aft seal (item 3), as depicted in Figure 2 of Bell Alert Service Bulletin (ASB) No. 206L–04–129 for the Model 206L–4 and ASB No. 407–04–66 for the Model 407, both Revision A, and both dated December 1, 2004.

(3) Visually inspect the remaining freewheel part details for a missing channel.

(4) If the channel is missing, replace or rework the cap assembly by following the instructions depicted in Figure 3 of ASB 206L–04–129 or ASB 407 04–66, as applicable for your model helicopter. Using a vibrating stylus, mark the letter ''R'' at the end of the serial number on the cap assembly.

(f) Alternative Methods of Compliance (AMOCs)

(1) The Manager, Safety Management Group, FAA, may approve AMOCs for this AD. Send your proposal to: Eric Haight, Aviation Safety Engineer, FAA, Rotorcraft Directorate, Regulations and Policy Group, Fort Worth, Texas 76137, telephone (817) 222–5110, email: *eric.haight@faa.gov.*

(2) For operations conducted under a 14 CFR part 119 operating certificate or under 14 CFR part 91, subpart K, we suggest that you notify your principal inspector, or lacking a principal inspector, the manager of the local flight standards district office or certificate holding district office before operating any aircraft complying with this AD through an AMOC.

(g) Additional Information

The subject of this AD is addressed in Transport Canada Civil Aviation (TCCA) AD No. CF–2004–17R1, dated February 11, 2005. You may view the TCCA AD at *http://www.regulations.gov* in Docket No. FAA–2013–0526.

(h) Subject

Joint Aircraft Service Component (JASC) Code: 6300: Main Rotor Drive System.

(i) Material Incorporated by Reference

(1) The Director of the Federal Register approved the incorporation by reference (IBR) of the service information listed in this paragraph under 5 U.S.C. 552(a) and 1 CFR part 51.

(2) You must use this service information as applicable to do the actions required by this AD, unless the AD specifies otherwise.

(i) Bell Alert Service Bulletin (ASB) No. 206L–04–129, Revision A, dated December 1, 2004.

(ii) Bell ASB No. 407–04–66, Revision A, dated December 1, 2004.

(3) For Bell service information identified in this AD, contact Bell Helicopter Textron, Inc., P.O. Box 482, Fort Worth, Texas 76101, telephone (817) 280–3391, fax (817) 280–6466.

(4) You may view this service information at FAA, Office of the Regional Counsel, Southwest Region, 2601 Meacham Blvd., Room 663, Fort Worth, Texas 76137. For information on the availability of this material at the FAA, call (817) 222–5110.

(5) You may view this service information that is incorporated by reference at the National Archives and Records Administration (NARA). For information on the availability of this material at NARA, call (202) 741–6030, or go to: *http://www.archives.gov/federal-register/cfr/ibr-locations.html.*

Issued in Fort Worth, Texas, on October 1, 2013.

Kim Smith,

Directorate Manager, Rotorcraft Directorate, Aircraft Certification Service.

[FR Doc. 2013–25310 Filed 10–30–13; 8:45 am]

BILLING CODE 4910–13–P

DEPARTMENT OF TRANSPORTATION

Federal Aviation Administration

14 CFR Part 39

[Docket No. FAA–2013–0401; Directorate Identifier 2012–SW–047–AD; Amendment 39–17606; AD 2013–19–24]

RIN 2120–AA64

Airworthiness Directives; MD Helicopters, Inc., Helicopters

AGENCY: Federal Aviation Administration (FAA), DOT.

ACTION: Final rule.

SUMMARY: We are superseding Airworthiness Directive (AD) 2003–08–51 for MD Helicopters, Inc. (MDHI), Model 369A, 369D, 369E, 369H, 369HE, 369HM, 369HS, 369F and 369FF helicopters with certain MDHI or Helicopter Technology Company (HTC) tail rotor blades installed. AD 2003–08–51 required reducing the retirement life of each tail rotor blade (blade), performing a one-time visual inspection of each blade's pitch horn (pitch horn) for a crack or corrosion, and replacing any cracked blade or any blade that has exceeded its retirement life with an

airworthy blade. AD 2003–08–51 also required reporting information to the FAA within 24 hours following the one-time inspection. Since we issued AD 2003–08–51, an accident in England prompted an investigation that showed corrosion on the blade's pitch horn that had not been detected under the paint. This new AD retains some of the requirements of AD 2003–08–51 and also requires paint removal for all pitch horn inspections, inspecting for pitting and the shot peen surface's condition in addition to cracks and corrosion, and adds certain part-numbered blades to the applicability. These actions are intended to prevent a pitch horn from cracking, leading to vibration, loss of tail rotor pitch control, and subsequent loss of tail rotor and helicopter control.

DATES: This AD is effective December 5, 2013.

The Director of the Federal Register approved the incorporation by reference of certain documents listed in this AD as of December 5, 2013.

ADDRESSES: For service information identified in this AD, contact MD Helicopters, Inc., Attn: Customer Support Division, 4555 E. McDowell Rd., Mail Stop M615, Mesa, AZ 85215–9734; telephone 1–800–388–3378; fax 480–346–6813; email *serviceengineering@mdhelicopters.com;* Web site *http://www.mdhelicopters.com* or contact Helicopter Technology Company, 12923 South Spring Street, Los Angeles, CA 90061; telephone 310–523–2750; email *gburdorf@helicoptertech.com;* Web site *www.helicoptertech.com*.

Examining the AD Docket

You may examine the AD docket on the Internet at *http://www.regulations.gov* or in person at the Docket Operations Office between 9 a.m. and 5 p.m., Monday through Friday, except Federal holidays. The AD docket contains this AD, any incorporated-by-reference service information, the economic evaluation, any comments received, and other information. The street address for the Docket Operations Office (phone: 800–647–5527) is U.S. Department of Transportation, Docket Operations Office, M–30, West Building Ground Floor, Room W12–140, 1200 New Jersey Avenue SE., Washington, DC 20590.

FOR FURTHER INFORMATION CONTACT: Fred Guerin, Aviation Safety Engineer, Los Angeles Aircraft Certification Office, Transport Airplane Directorate, FAA, 3960 Paramount Blvd., Lakewood, California 90712; telephone (562) 627–5232; email *fred.guerin@faa.gov*.

SUPPLEMENTARY INFORMATION:

Discussion

On May 13, 2013, at 78 FR 27867, the **Federal Register** published our notice of proposed rulemaking (NPRM), which proposed to amend 14 CFR part 39 by removing AD No. 2003–08–51 (68 FR 39449, July 2, 2003; corrected 68 FR 47447, August 11, 2003) and by adding an AD that would apply to MDHI Model 369A, 369D, 369E, 369H, 369HE, 369HM, 369HS, 369F and 369FF helicopters with a tail rotor blade (blade) part number (P/N) 369D21640–501, 369D21640–503, 369D21641–501, 369D21641–503, 369D21642–501, 369D21642–503, 369D21643–501, or 369D21643–503 installed, or with an HTC blade P/N 500P3100–101, 500P3100–301, 500P3300–501, or 500P3500–701 installed. AD No. 2003–08–51 required reducing the retirement life of the blade, performing a one-time visual inspection of each pitch horn for a crack or corrosion, and replacing any cracked blade or any blade that has exceeded its retirement life. AD No. 2003–08–51 was prompted by two reports of cracked pitch horns that failed during flight. The cracks developed before the blades reached their retirement lives.

Actions Since AD 2003–08–51 Was Issued

Since we published AD No. 2003–08–51, investigation of an accident in England found corrosion on the pitch horn that was not detected under the paint. The corrosion compromised the shot peen surface, which caused premature fatigue failure.

As a result, the NPRM (78 FR 27867, May 13, 2013) proposed to require establishing a retirement life for new applicable blades of 400 hours time-in-service (TIS), replacing within 10 hours TIS any installed blades with 390 to 700 hours TIS, and replacing before further flight any blades with more than 700 hours TIS. Within 60 days and thereafter at intervals not to exceed one year, the NPRM proposed to inspect all other blades with a 10X or higher power magnifying glass for a crack, pitting, corrosion, and the condition of the dimpled shot peen surface. If there is a crack, pitting, corrosion, or a nonconforming shot peen surface, the NPRM proposed to require replacement of the blade with an airworthy blade. The proposed requirements were intended to prevent a pitch horn from cracking and separating from the blade, leading to an unbalanced condition, vibration, loss of tail rotor pitch control, and loss of directional control of the helicopter.

Comments

We gave the public the opportunity to participate in developing this AD, but we did not receive any comments on the NPRM (78 FR 27867, May 13, 2013).

FAA's Determination

We have reviewed the relevant information and determined that an unsafe condition exists and is likely to exist or develop on other products of these same type designs and that air safety and the public interest require adopting the AD requirements as proposed.

Related Service Information

We reviewed MDHI Service Bulletins SB369D–210, SB369E–105, SB369F–091, and SB369H–252, all dated November 21, 2011, and HTC Mandatory Service Bulletin No. 3100–5, dated August 25, 2011 (service bulletins). The service bulletins specify removing the paint from the pitch horn, performing an inspection of the blade using a 10x magnifying glass and a bright light, repainting the pitch horn area, and repeating the inspection annually. The service bulletins state that no corrosion, pitting, or cracking is acceptable. The MDHI service bulletins adds that a lack, removal, or blending of the shot peen surface is unacceptable.

Costs of Compliance

We estimate that this AD will affect 827 helicopters of U.S. Registry and that labor costs will average $85 a work-hour. Based on these estimates, we expect the following costs:

- The inspection will require 4.5 work hours, and parts will cost $20 for a total cost of about $403 per helicopter and $333,281 for the U.S. fleet.
- Replacing a tail rotor blade, if needed, would require 1 work hour. Parts would cost $15,951, for a total cost of $16,036 per helicopter.
- The cost is negligible to revise the Airworthiness Limitations section of the maintenance manual to reflect a blade's new retirement life.

Authority for This Rulemaking

Title 49 of the United States Code specifies the FAA's authority to issue rules on aviation safety. Subtitle I, section 106, describes the authority of the FAA Administrator. Subtitle VII: Aviation Programs, describes in more detail the scope of the Agency's authority.

We are issuing this rulemaking under the authority described in Subtitle VII, Part A, Subpart III, Section 44701: ''General requirements.'' Under that section, Congress charges the FAA with promoting safe flight of civil aircraft in

air commerce by prescribing regulations for practices, methods, and procedures the Administrator finds necessary for safety in air commerce. This regulation is within the scope of that authority because it addresses an unsafe condition that is likely to exist or develop on products identified in this rulemaking action.

Regulatory Findings

This AD will not have federalism implications under Executive Order 13132. This AD will not have a substantial direct effect on the States, on the relationship between the national government and the States, or on the distribution of power and responsibilities among the various levels of government.

For the reasons discussed above, I certify that this AD:

(1) Is not a ''significant regulatory action'' under Executive Order 12866;

(2) Is not a ''significant rule'' under DOT Regulatory Policies and Procedures (44 FR 11034, February 26, 1979);

(3) Will not affect intrastate aviation in Alaska to the extent that it justifies making a regulatory distinction; and

(4) Will not have a significant economic impact, positive or negative, on a substantial number of small entities under the criteria of the Regulatory Flexibility Act.

We prepared an economic evaluation of the estimated costs to comply with this AD and placed it in the AD docket.

List of Subjects in 14 CFR Part 39

Air transportation, Aircraft, Aviation safety, Incorporation by reference, Safety.

Adoption of the Amendment

Accordingly, under the authority delegated to me by the Administrator, the FAA amends 14 CFR part 39 as follows:

PART 39—AIRWORTHINESS DIRECTIVES

■ 1. The authority citation for part 39 continues to read as follows:

Authority: 49 U.S.C. 106(g), 40113, 44701.

§ 39.13 [Amended]

■ 2. The FAA amends § 39.13 by removing Airworthiness Directive (AD) 2003–08–51, Amendment 39–13215 (68 FR 39449, August 11, 2003; correction 68 FR 47447, August 11, 2003), and adding the following new (AD):

2013–19–24 MD Helicopters, Inc.: Amendment 39–17606; Docket No. FAA–2013–0401; Directorate Identifier 2012–SW–047–AD.

(a) Applicability

This AD applies to MD Helicopters, Inc. (MDHI), Model 369A, 369D, 369E, 369H, 369HE, 369HM, 369HS, 369F and 369FF helicopters with a tail rotor blade (blade) part number (P/N) 369D21640–501, 369D21640–503, 369D21641–501, 369D21641–503, 369D21642–501, 369D21642–503, 369D21643–501, or 369D21643–503 installed, or with a Helicopter Technology Company blade P/N 500P3100–101, 500P3100–301, 500P3300–501, or 500P3500–701 installed, certificated in any category.

(b) Unsafe Condition

This AD defines the unsafe condition as the tail rotor blade pitch horn (pitch horn) separating from the tail rotor blade, leading to an unbalanced condition, vibration, loss of tail rotor pitch control and loss of directional control of the helicopter.

(c) Affected ADs

This AD supersedes AD No. 2003–08–51, Amendment 39–13215 (68 FR 39449, July 2, 2003; correction 68 FR 47447, August 11, 2003).

(d) Effective Date

This AD becomes effective December 5, 2013.

(e) Compliance

You are responsible for performing each action required by this AD within the specified compliance time unless it has already been accomplished prior to that time.

(f) Required Actions

(1) Before further flight, for each applicable blade, revise the Airworthiness Limitations section of the maintenance manual to reflect that the blade has a retirement life of 400 hours time-in-service (TIS).

(2) For helicopters with an applicable blade installed that has 390 through 700 hours TIS, within 10 hours TIS, replace the blade with an airworthy blade.

(3) For all other applicable helicopters, within 60 days, and thereafter at intervals not to exceed one year, remove the paint from the blade pitch control arm in accordance with the Accomplishment Instructions, Section 2.A.(1) through 2.A.(3), of MDHI Service Bulletins SB369D–210, SB369E–105, SB369F–091, and SB369H–252, all dated November 21, 2011, as applicable to your model helicopter.

(i) Using a 10X or higher power magnifying glass, inspect all four sides and the pocket of the blade pitch control arm for a crack, pitting, or corrosion and for the condition of the dimpled shot peen surface by referring to Figure 1 of MDHI Service Bulletins SB369D–210, SB369E–105, SB369F–091, and SB369H–252, as applicable to your model helicopter, and by reviewing the rotorcraft maintenance records to determine whether rework was done in this area.

(ii) If there is pitting, corrosion, a crack, blending or removal of any of the dimpled shot peen surface, or any indication that the shot peen has not been done, replace the blade with an airworthy blade.

(iii) If there is no pitting, corrosion, cracks, or blending or removal of any of the dimpled shot peen surface, refinish the stripped pitch control arm in accordance with the Accomplishment Instructions, Section 2.A.(6) through 2.A.(7), of MDHI Service Bulletins SB369D–210, SB369E–105, SB369F–091, and SB369H–252, as applicable to your model helicopter.

(g) Alternative Methods of Compliance (AMOCs)

(1) The Manager, Los Angeles Aircraft Certification Office, FAA, may approve AMOCs for this AD. Send your proposal to: Fred Guerin, Aviation Safety Engineer, Los Angeles Aircraft Certification Office, Transport Airplane Directorate, FAA, 3960 Paramount Blvd., Lakewood, California 90712; telephone (562) 627–5232; email *fred.guerin@faa.gov*.

(2) For operations conducted under a 14 CFR part 119 operating certificate or under 14 CFR part 91, subpart K, we suggest that you notify your principal inspector, or lacking a principal inspector, the manager of the local flight standards district office or certificate holding district office before operating any aircraft complying with this AD through an AMOC.

(3) AMOCs approved previously in accordance with AD No. 2003–08–51 (68 FR 39449, July 2, 2003; correction 68 FR 47447, August 11, 2003) are approved as AMOCs for the corresponding requirements in this AD.

(h) Additional Information

MD Helicopters, Inc., maintenance manuals CSP–HMI2, TR12–001, CHP–H–4, and TR12–001, which are not incorporated by reference, contain additional information about the subject of this AD. For service information identified in this AD, contact MD Helicopters, Inc., Attn: Customer Support Division, 4555 E. McDowell Rd., Mail Stop M615, Mesa, AZ 85215–9734; telephone 1–800–388–3378; fax 480–346–6813; email *serviceengineering@mdhelicopters.com;* Web site *http://www.mdhelicopters.com* or contact Helicopter Technology Company, 12923 South Spring Street, Los Angeles, CA 90061; telephone 310–523–2750; email *gburdorf@helicoptertech.com;* Web site *www.helicoptertech.com*. You may review a copy of this information at the FAA, Office of the Regional Counsel, Southwest Region, 2601 Meacham Blvd., Room 663, Fort Worth, Texas 76137.

(i) Subject

Joint Aircraft Service Component (JASC) Code: 6410, Tail Rotor Blades.

(j) Material Incorporated by Reference

(1) The Director of the Federal Register approved the incorporation by reference (IBR) of the service information listed in this paragraph under 5 U.S.C. 552(a) and 1 CFR part 51.

(2) You must use this service information as applicable to do the actions required by this AD, unless the AD specifies otherwise.

(i) MD Helicopters Service Bulletin SB369D–210, dated November 21, 2011.

(ii) MD Helicopters Service Bulletin SB369E–105, dated November 21, 2011.

(iii) MD Helicopters Service Bulletin SB369F–091, dated November 21, 2011.

(iv) MD Helicopters Service Bulletin SB369H–252, dated November 21, 2011.

Note 1 to paragraph (j)(2): MD Helicopters Service Bulletins SB369D–210, SB369E–105, SB369F–091, and SB369H–252, all dated November 21, 2011, are co-published as one document.

(3) For MD Helicopters service information identified in this AD, contact MD Helicopters, Inc., Attn: Customer Support Division, 4555 E. McDowell Rd., Mail Stop M615, Mesa, AZ 85215–9734; telephone 1–800–388–3378; fax 480–346–6813; email *serviceengineering@mdhelicopters.com;* Web site *http://www.mdhelicopters.com.*

(4) You may view this service information at FAA, Office of the Regional Counsel, Southwest Region, 2601 Meacham Blvd., Room 663, Fort Worth, Texas 76137. For information on the availability of this material at the FAA, call (817) 222–5110.

(5) You may also view this service information that is incorporated by reference at the National Archives and Records Administration (NARA). For information on the availability of this material at NARA, call (202) 741–6030, or go to: *http://www.archives.gov/federal-register/cfr/ibr-locations.html.*

Issued in Fort Worth, Texas, on September 18, 2013.

Kim Smith,

Directorate Manager, Rotorcraft Directorate, Aircraft Certification Service.

[FR Doc. 2013–24039 Filed 10–30–13; 8:45 am]

BILLING CODE 4910–13–P

DEPARTMENT OF TRANSPORTATION

Federal Aviation Administration

14 CFR Part 39

[Docket No. FAA–2013–0624; Directorate Identifier 2013–NM–071–AD; Amendment 39–17632; AD 2013–21–08]

RIN 2120–AA64

Airworthiness Directives; ATR—GIE Avions de Transport Régional Airplanes

AGENCY: Federal Aviation Administration (FAA), Department of Transportation (DOT).

ACTION: Final rule.

SUMMARY: We are adopting a new airworthiness directive (AD) for certain ATR—GIE Avions de Transport Régional Model ATR72–101, –201, –102, –202, –211, –212, and –212A airplanes. This AD was prompted by reports of airplane incidents and accidents that have occurred because of low-level fuel tank situations and fuel starvation that resulted in engine flameouts. This AD requires installing a fuel quantity indicator (FQI) equipped with a locking adaptor on the electrical connector. We are issuing this AD to prevent an engine flame-out, which could result in reduced controllability of the airplane.

DATES: This AD becomes effective December 5, 2013.

The Director of the Federal Register approved the incorporation by reference of a certain publication listed in this AD as of December 5, 2013.

ADDRESSES: You may examine the AD docket on the Internet at *http://www.regulations.gov/#!docketDetail;D=FAA-2013-0624* or in person at the U.S. Department of Transportation, Docket Operations, M–30, West Building Ground Floor, Room W12–140, 1200 New Jersey Avenue SE., Washington, DC.

For service information identified in this AD, contact ATR—GIE Avions de Transport Régional, 1, Allée Pierre Nadot, 31712 Blagnac Cedex, France; telephone +33 (0) 5 62 21 62 21; fax +33 (0) 5 62 21 67 18; email *continued.airworthiness@atr.fr;* Internet *http://www.aerochain.com.* You may review this referenced service information at the FAA, Transport Airplane Directorate, 1601 Lind Avenue SW., Renton, WA. For information on the availability of this material at the FAA, call 425–227–1221.

FOR FURTHER INFORMATION CONTACT: Tom Rodriguez, Aerospace Engineer, International Branch, ANM–116, Transport Airplane Directorate, FAA, 1601 Lind Avenue SW., Renton, WA 98057–3356; telephone (425) 227–1137; fax (425) 227–1149.

SUPPLEMENTARY INFORMATION:

Discussion

We issued a notice of proposed rulemaking (NPRM) to amend 14 CFR part 39 by adding an AD that would apply to the specified products. The NPRM published in the **Federal Register** on July 18, 2013 (78 FR 42898). The NPRM proposed to correct an unsafe condition for the specified products.

The European Aviation Safety Agency (EASA), which is the Technical Agent for the Member States of the European Community, has issued EASA Airworthiness Directive 2013–0047, dated March 4, 2013 (referred to after this as the Mandatory Continuing Airworthiness Information, or ''the MCAI''), to correct an unsafe condition for the specified products. The MCAI states:

> Large aeroplane incidents and accidents have occurred because of fuel tank low level situations, or because of fuel starvation, resulting in one or several engine(s) flame-out. The results of the investigation into an ATR 72 accident in August 2005 have shown that overruling standard operational procedures and maintenance practices have led to this kind of occurrence.
>
> Consequently, additional actions to help avoid maintenance errors, like installation of a wrong gauge or wrong indicator, need to be taken.
>
> Although it is recognised that the fuel (indicating) system of the ATR 42/72 type design is compliant with the applicable requirements, the risk of other maintenance errors will be mitigated by making installation of an ATR 42 Fuel Quantity Indicator (FQI) on an ATR 72 aeroplane mechanically impossible through a specific design change on the ATR 72.
>
> For the reasons described above, this [EASA] AD requires modification of the ATR 72 FQI by installing a locking adaptor on the electrical connector. You may obtain further information by examining the MCAI in the AD docket.

We are issuing this AD to prevent an engine flame-out, which could result in reduced controllability of the airplane. You may examine the MCAI in the AD docket on the Internet at *http://www.regulations.gov/#!documentDetail;D=FAA-2013-0624-0002.*

Comments

We gave the public the opportunity to participate in developing this AD. We received no comments on the NPRM (78 FR 42898, July 18, 2013) or on the determination of the cost to the public.

Conclusion

We reviewed the available data and determined that air safety and the public interest require adopting this AD as proposed—except for minor editorial changes. We have determined that these minor changes:

- Are consistent with the intent that was proposed in the NPRM (78 FR 42898, July 18, 2013) for correcting the unsafe condition; and
- Do not add any additional burden upon the public than was already proposed in the NPRM (78 FR 42898, July 18, 2013).

Costs of Compliance

Based on the service information, we estimate that this AD affects 25 products of U.S. registry. We also estimate that it takes 2 work-hours per product to comply with the basic requirements of this AD. The average labor rate is $85 per work-hour. Required parts would cost about $3,882 per product. Where the service information lists required parts costs that are covered under warranty, we have assumed that there will be no charge for these parts. As we do not control warranty coverage for affected parties, some parties may incur costs higher than estimated here. Based on these figures, we estimate the cost of

the AD on U.S. operators to be $101,300, or $4,052 per product.

Authority for This Rulemaking

Title 49 of the United States Code specifies the FAA's authority to issue rules on aviation safety. Subtitle I, section 106, describes the authority of the FAA Administrator. ''Subtitle VII: Aviation Programs,'' describes in more detail the scope of the Agency's authority.

We are issuing this rulemaking under the authority described in ''Subtitle VII, Part A, Subpart III, Section 44701: General requirements.'' Under that section, Congress charges the FAA with promoting safe flight of civil aircraft in air commerce by prescribing regulations for practices, methods, and procedures the Administrator finds necessary for safety in air commerce. This regulation is within the scope of that authority because it addresses an unsafe condition that is likely to exist or develop on products identified in this rulemaking action.

Regulatory Findings

We determined that this AD will not have federalism implications under Executive Order 13132. This AD will not have a substantial direct effect on the States, on the relationship between the national government and the States, or on the distribution of power and responsibilities among the various levels of government.

For the reasons discussed above, I certify that this AD:

1. Is not a ''significant regulatory action'' under Executive Order 12866;
2. Is not a ''significant rule'' under the DOT Regulatory Policies and Procedures (44 FR 11034, February 26, 1979);
3. Will not affect intrastate aviation in Alaska; and
4. Will not have a significant economic impact, positive or negative, on a substantial number of small entities under the criteria of the Regulatory Flexibility Act.

We prepared a regulatory evaluation of the estimated costs to comply with this AD and placed it in the AD docket.

Examining the AD Docket

You may examine the AD docket on the Internet at *http://www.regulations.gov/#!docketDetail;D=FAA-2013-0624;* or in person at the Docket Operations office between 9 a.m. and 5 p.m., Monday through Friday, except Federal holidays. The AD docket contains this AD, the MCAI, the regulatory evaluation, any comments received, and other information. The street address for the Docket Operations office (telephone (800) 647–5527) is in the **ADDRESSES** section.

List of Subjects in 14 CFR Part 39

Air transportation, Aircraft, Aviation safety, Incorporation by reference, Safety.

Adoption of the Amendment

Accordingly, under the authority delegated to me by the Administrator, the FAA amends 14 CFR part 39 as follows:

PART 39—AIRWORTHINESS DIRECTIVES

■ 1. The authority citation for part 39 continues to read as follows:

Authority: 49 U.S.C. 106(g), 40113, 44701.

§ 39.13 [Amended]

■ 2. The FAA amends § 39.13 by adding the following new AD:

2013–21–08 ATR—GIE Avions de Transport Régional: Amendment 39–17632. Docket No. FAA–2013–0624; Directorate Identifier 2013–NM–071–AD.

(a) Effective Date

This airworthiness directive (AD) becomes effective December 5, 2013.

(b) Affected ADs

None.

(c) Applicability

This AD applies to ATR—GIE Avions de Transport Régional Model ATR72–101, –201, –102, –202, –211, –212, and –212A airplanes, certificated in any category, except airplanes that have received ATR Modification 5948 in production.

(d) Subject

Air Transport Association (ATA) of America Code 28, Fuel.

(e) Reason

This AD was prompted by reports of airplane incidents and accidents that have occurred because of low-level fuel tank situations and fuel starvation that resulted in engine flameouts. We are issuing this AD to prevent an engine flame-out, which could result in reduced controllability of the airplane.

(f) Compliance

You are responsible for having the actions required by this AD performed within the compliance times specified, unless the actions have already been done.

(g) Installation

At the applicable time specified in paragraph (g)(1) or (g)(2) of this AD: Install a fuel quantity indicator (FQI) equipped with a locking adaptor on the electrical connector, in accordance with the Accomplishment Instructions of Avions de Transport Régional Service Bulletin ATR72–28–1026, dated February 26, 2013.

(1) For airplanes on which a fuel secondary low level detection system is not installed: Within 24 months after the effective date of this AD.

(2) For airplanes on which a fuel secondary low level detection system is installed: Within 36 months after the effective date of this AD.

Note 1 to paragraph (g) of this AD: The fuel secondary low level detection system may have been installed through the embodiment of ATR Modification 04686 in production, or as applicable, through ATR Service Bulletins ATR72–28–1013 or ATR72–28–1022 in service.

(h) Other FAA AD Provisions

The following provisions also apply to this AD:

(1) *Alternative Methods of Compliance (AMOCs):* The Manager, International Branch, ANM–116, FAA, has the authority to approve AMOCs for this AD, if requested using the procedures found in 14 CFR 39.19. In accordance with 14 CFR 39.19, send your request to your principal inspector or local Flight Standards District Office, as appropriate. If sending information directly to the International Branch, send it to ATTN: Tom Rodriguez, Aerospace Engineer, International Branch, ANM–116, Transport Airplane Directorate, FAA, 1601 Lind Avenue SW., Renton, WA 98057–3356; telephone (425) 227–1137; fax (425) 227–1149. Information may be emailed to: *9-ANM-116-AMOC-REQUESTS@faa.gov.* Before using any approved AMOC, notify your appropriate principal inspector, or lacking a principal inspector, the manager of the local flight standards district office/certificate holding district office. The AMOC approval letter must specifically reference this AD.

(2) *Airworthy Product:* For any requirement in this AD to obtain corrective actions from a manufacturer or other source, use these actions if they are FAA-approved. Corrective actions are considered FAA-approved if they are approved by the State of Design Authority (or their delegated agent). You are required to assure the product is airworthy before it is returned to service.

(i) Related Information

Refer to Mandatory Continuing Airworthiness Information (MCAI) European Aviation Safety Agency Airworthiness Directive 2013–0047, dated March 4, 2013, for related information. You may examine the MCAI in the AD docket on the Internet at *http://www.regulations.gov/#!documentDetail;D=FAA-2013-0624-0002.*

(j) Material Incorporated by Reference

(1) The Director of the Federal Register approved the incorporation by reference (IBR) of the service information listed in this paragraph under 5 U.S.C. 552(a) and 1 CFR part 51.

(2) You must use this service information as applicable to do the actions required by this AD, unless this AD specifies otherwise.

(i) Avions de Transport Régional Service Bulletin ATR72–28–1026, dated February 26, 2013.

(ii) Reserved.

(3) For service information identified in this AD, contact ATR—GIE Avions de Transport Régional, 1, Allée Pierre Nadot,

31712 Blagnac Cedex, France; telephone +33 (0) 5 62 21 62 21; fax +33 (0) 5 62 21 67 18; email *continued.airworthiness@atr.fr;* Internet *http://www.aerochain.com.*

(4) You may review copies of the service information at the FAA, Transport Airplane Directorate, 1601 Lind Avenue SW., Renton, WA. For information on the availability of this material at the FAA, call 425–227–1221.

(5) You may view this service information that is incorporated by reference at the National Archives and Records Administration (NARA). For information on the availability of this material at NARA, call 202–741–6030, or go to: *http://www.archives.gov/federal-register/cfr/ibr-locations.html.*

Issued in Renton, Washington, on September 30, 2013.

Jeffrey E. Duven,

Acting Manager, Transport Airplane Directorate, Aircraft Certification Service.

[FR Doc. 2013–24952 Filed 10–30–13; 8:45 am]

BILLING CODE 4910–13–P

DEPARTMENT OF TRANSPORTATION

Federal Aviation Administration

14 CFR Part 39

[Docket No. FAA–2013–0546; Directorate Identifier 2013–NM–050–AD; Amendment 39–17631; AD 2013–21–07]

RIN 2120–AA64

Airworthiness Directives; The Boeing Company Airplanes

AGENCY: Federal Aviation Administration (FAA), DOT.

ACTION: Final rule.

SUMMARY: We are adopting a new airworthiness directive (AD) for certain The Boeing Company Model 727 airplanes. This AD was prompted by certain mandated programs intended to support the airplane reaching its limit of validity (LOV) of the engineering data that support the established structural maintenance program. This AD requires, for certain airplanes, a modification of the web of the horizontal stabilizer center section rear spar. For the other airplanes, this AD requires an inspection for cracks in the web, and repair or modification as applicable. We are issuing this AD to prevent cracking at the upper fastener holes in the riveted web in the horizontal stabilizer center section rear spar, which could result in failure of the spar forging and lead to horizontal stabilizer separation and loss of control of the airplane.

DATES: This AD is effective December 5, 2013.

The Director of the Federal Register approved the incorporation by reference of a certain publication listed in this AD as of December 5, 2013.

ADDRESSES: For service information identified in this AD, contact Boeing Commercial Airplanes, Attention: Data & Services Management, P.O. Box 3707, MC 2H–65, Seattle, WA 98124–2207; telephone 206–544–5000, extension 1; fax 206–766–5680; Internet *https://www.myboeingfleet.com.* You may view this referenced service information at the FAA, Transport Airplane Directorate, 1601 Lind Avenue SW., Renton, Washington. For information on the availability of this material at the FAA, call 425–227–1221.

Examining the AD Docket

You may examine the AD docket on the Internet at *http://www.regulations.gov;* or in person at the Docket Management Facility between 9 a.m. and 5 p.m., Monday through Friday, except Federal holidays. The AD docket contains this AD, the regulatory evaluation, any comments received, and other information. The address for the Docket Office (phone: 800–647–5527) is Document Management Facility, U.S. Department of Transportation, Docket Operations, M–30, West Building Ground Floor, Room W12–140, 1200 New Jersey Avenue SE., Washington, DC 20590.

FOR FURTHER INFORMATION CONTACT: Berhane Alazar, Aerospace Engineer, Airframe Branch, ANM–120S, FAA, Seattle Aircraft Certification Office (ACO), 1601 Lind Avenue SW., Renton, Washington 98057–3356; phone: 425–917–6577; fax: 425–917–6590; email: *berhane.alazar@faa.gov.*

SUPPLEMENTARY INFORMATION:

Discussion

We issued a notice of proposed rulemaking (NPRM) to amend 14 CFR part 39 by adding an AD that would apply to the specified products. The NPRM published in the **Federal Register** on July 17, 2013 (78 FR 42720). The NPRM proposed to require for certain airplanes, a modification of the web of the horizontal stabilizer center section rear spar. For the other airplanes, the NPRM proposed to require an inspection for cracks in the web, and repair or modification as applicable.

Comments

We gave the public the opportunity to participate in developing this AD. We have considered the comment received. Boeing supported the NPRM (78 FR 42720, July 17, 2013).

Clarification of Applicability

Since the NPRM (78 FR 42720, July 17, 2013) was published, we have clarified the applicability in paragraph (c) of this final rule to reflect the most recent type certificate data sheet for The Boeing Company Model 727 airplanes.

Conclusion

We reviewed the relevant data, considered the comments received, and determined that air safety and the public interest require adopting this AD as proposed—except for minor editorial changes. We have determined that these minor changes:

- Are consistent with the intent that was proposed in the NPRM (78 FR 42720, July 17, 2013) for correcting the unsafe condition; and
- Do not add any additional burden upon the public than was already proposed in the NPRM (78 FR 42720, July 17, 2013).

Costs of Compliance

We estimate that this AD affects 106 airplanes of U.S. registry. We estimate the following costs to comply with this AD:

ESTIMATED COSTS

Action	Labor cost	Parts cost	Cost per product	Cost on U.S. operators
Modification	32 work-hours × $85 per hour = $2,720	$7,154	$9,874	$1,036,770

Authority for This Rulemaking

Title 49 of the United States Code specifies the FAA's authority to issue rules on aviation safety. Subtitle I, section 106, describes the authority of the FAA Administrator. Subtitle VII: Aviation Programs, describes in more detail the scope of the Agency's authority.

We are issuing this rulemaking under the authority described in Subtitle VII,

Part A, Subpart III, Section 44701: ''General requirements.'' Under that section, Congress charges the FAA with promoting safe flight of civil aircraft in air commerce by prescribing regulations for practices, methods, and procedures the Administrator finds necessary for safety in air commerce. This regulation is within the scope of that authority because it addresses an unsafe condition that is likely to exist or develop on products identified in this rulemaking action.

Regulatory Findings

This AD will not have federalism implications under Executive Order 13132. This AD will not have a substantial direct effect on the States, on the relationship between the national government and the States, or on the distribution of power and responsibilities among the various levels of government.

For the reasons discussed above, I certify that this AD:

(1) Is not a ''significant regulatory action'' under Executive Order 12866,

(2) Is not a ''significant rule'' under DOT Regulatory Policies and Procedures (44 FR 11034, February 26, 1979),

(3) Will not affect intrastate aviation in Alaska, and

(4) Will not have a significant economic impact, positive or negative, on a substantial number of small entities under the criteria of the Regulatory Flexibility Act.

List of Subjects in 14 CFR Part 39

Air transportation, Aircraft, Aviation safety, Incorporation by reference, Safety.

Adoption of the Amendment

Accordingly, under the authority delegated to me by the Administrator, the FAA amends 14 CFR part 39 as follows:

PART 39—AIRWORTHINESS DIRECTIVES

■ 1. The authority citation for part 39 continues to read as follows:

Authority: 49 U.S.C. 106(g), 40113, 44701.

§ 39.13 [Amended]

■ 2. The FAA amends § 39.13 by adding the following new airworthiness directive (AD):

2013–21–07 The Boeing Company: Amendment 39–17631; Docket No. FAA–2013–0546; Directorate Identifier 2013–NM–050–AD.

(a) Effective Date

This AD is effective December 5, 2013.

(b) Affected ADs

None.

(c) Applicability

This AD applies to The Boeing Company Model 727, 727C, 727–100, 727 –100C, 727–200, and 727–200F series airplanes, certificated in any category, identified as Group III and Group IV in Boeing Service Bulletin 55–46, dated April 8, 1970.

(d) Subject

Joint Aircraft System Component (JASC)/Air Transport Association (ATA) of America Code 55, Stabilizers.

(e) Unsafe Condition

This AD is intended to complete certain mandated programs intended to support the airplane reaching its limit of validity of the engineering data that support the established structural maintenance program. We are issuing this AD to prevent cracking at the upper fastener holes in the riveted web in the horizontal stabilizer center section rear spar, which could lead to horizontal stabilizer separation and loss of control of the airplane.

(f) Compliance

Comply with this AD within the compliance times specified, unless already done.

(g) Group III Airplanes: Inspection

For airplanes identified as Group III in Boeing Service Bulletin 55–46, dated April 8, 1970: At the later of the times specified in paragraphs (g)(1) and (g)(2) of this AD, do an eddy-current inspection for cracks in the web, in accordance with the Accomplishment Instructions of Boeing Service Bulletin 55–46, dated April 8, 1970.

(1) Before the accumulation of 60,000 total flight cycles.

(2) Within 24 months or 2,500 flight cycles after the effective date of this AD, whichever occurs first.

(h) Group III Airplanes: Corrective Actions

For airplanes identified as Group III in Boeing Service Bulletin 55–46, dated April 8, 1970: After the inspection required by paragraph (g) of this AD, do the applicable actions specified in paragraph (h)(1) or (h)(2) of this AD.

(1) If no crack is found, before further flight, modify the web of the horizontal stabilizer center section rear spar, in accordance with the Accomplishment Instructions of Boeing Service Bulletin 55–46, dated April 8, 1970.

(2) If any crack is found, repair before further flight using a method approved in accordance with the procedures specified in paragraph (j) of this AD.

(i) Group IV Airplanes: Modification

For airplanes identified as Group IV in Boeing Service Bulletin 55–46, dated April 8, 1970: At the later of the times specified in paragraphs (i)(1) and (i)(2) of this AD, modify the web of the horizontal stabilizer center section rear spar, in accordance with the Accomplishment Instructions of Boeing Service Bulletin 55–46, dated April 8, 1970.

(1) Before the accumulation of 60,000 total flight cycles.

(2) Within 24 months or 2,500 flight cycles after the effective date of this AD, whichever occurs first.

(j) Alternative Methods of Compliance (AMOCs)

(1) The Manager, Seattle Aircraft Certification Office (ACO), FAA, has the authority to approve AMOCs for this AD, if requested using the procedures found in 14 CFR 39.19. In accordance with 14 CFR 39.19, send your request to your principal inspector or local Flight Standards District Office, as appropriate. If sending information directly to the manager of the ACO, send it to the attention of the person identified in paragraph (k) of this AD. Information may be emailed to: *9-ANM-Seattle-ACO-AMOC-Requests@faa.gov.*

(2) Before using any approved AMOC, notify your appropriate principal inspector, or lacking a principal inspector, the manager of the local flight standards district office/certificate holding district office.

(3) An AMOC that provides an acceptable level of safety may be used for any repair required by this AD if it is approved by the Boeing Commercial Airplanes Organization Designation Authorization (ODA) that has been authorized by the Manager, Seattle ACO, to make those findings. For a repair method to be approved, the repair must meet the certification basis of the airplane, and the approval must specifically refer to this AD.

(k) Related Information

For more information about this AD, contact Berhane Alazar, Aerospace Engineer, Airframe Branch, ANM–120S, FAA, Seattle Aircraft Certification Office (ACO), 1601 Lind Avenue SW., Renton, Washington 98057–3356; phone: 425–917–6577; fax: 425–917–6590; email: *berhane.alazar@faa.gov.*

(l) Material Incorporated by Reference

(1) The Director of the Federal Register approved the incorporation by reference (IBR) of the service information listed in this paragraph under 5 U.S.C. 552(a) and 1 CFR part 51.

(2) You must use this service information as applicable to do the actions required by this AD, unless the AD specifies otherwise.

(i) Boeing Service Bulletin 55–46, dated April 8, 1970.

(ii) Reserved.

(3) For Boeing service information identified in this AD, contact Boeing Commercial Airplanes, Attention: Data & Services Management, P.O. Box 3707, MC 2H–65, Seattle, WA 98124–2207; telephone 206–544–5000, extension 1; fax 206–766–5680; Internet *https://www.myboeingfleet.com.*

(4) You may view this service information at FAA, Transport Airplane Directorate, 1601 Lind Avenue SW., Renton, Washington. For information on the availability of this material at the FAA, call 425–227–1221.

(5) You may view this service information that is incorporated by reference at the National Archives and Records Administration (NARA). For information on the availability of this material at NARA, call 202–741–6030, or go to: *http://www.archives.gov/federal-register/cfr/ibr-locations.html.*

Issued in Renton, Washington, on October 15, 2013.

Jeffrey E. Duven,

Acting Manager, Transport Airplane Directorate, Aircraft Certification Service.

[FR Doc. 2013–24943 Filed 10–30–13; 8:45 am]

BILLING CODE 4910–13–P

DEPARTMENT OF TRANSPORTATION

Federal Aviation Administration

14 CFR Part 39

[Docket No. FAA–2013–0665; Directorate Identifier 2012–NM–082–AD; Amendment 39–17634; AD 2013–22–02]

RIN 2120–AA64

Airworthiness Directives; Airbus Airplanes

AGENCY: Federal Aviation Administration (FAA), Department of Transportation (DOT).

ACTION: Final rule.

SUMMARY: We are adopting a new airworthiness directive (AD) for all Airbus Model A330–300 series airplanes and Model A340–200 and –300 series airplanes. This AD was prompted by reports of corrosion found on certain trimmable horizontal stabilizer actuators (THSA), affecting the ballscrew lower splines between the tie bar and the screw-jack. This AD requires repetitive detailed inspections for corrosion of certain THSAs, ballscrew integrity tests if necessary; and replacing any affected THSA with a serviceable or new and improved THSA, if necessary. We are issuing this AD to detect and correct corrosion of the THSAs, which could lead, in the case of ballscrew rupture, to the loss of transmission of THSA torque loads from the ballscrew to the tie-bar, prompting THSA blowback, and possibly resulting in loss of control of the airplane.

DATES: This AD becomes effective December 5, 2013.

The Director of the Federal Register approved the incorporation by reference of certain publications listed in this AD as of December 5, 2013.

ADDRESSES: You may examine the AD on the Internet at *http://www.regulations.gov/#!docketDetail;D=FAA-2013-0665* or in person at the U.S. Department of Transportation, Docket Operations, M–30, West Building Ground Floor, Room W12–140, 1200 New Jersey Avenue SE., Washington, DC.

For Airbus service information identified in this AD, contact Airbus SAS, Airworthiness Office—EAL, 1 Rond Point Maurice Bellonte, 31707 Blagnac Cedex, France; telephone +33 5 61 93 36 96; fax +33 5 61 93 45 80; email *airworthiness.A330–A340@airbus.com;* Internet *http://www.airbus.com.* For Goodrich service information identified in this AD, contact Goodrich Corporation, Actuation Systems, Product Support Department 13, Avenue de L'Eguillette—Saint-Ouen L'Aumone Boite Postale 7186 95056, Cergy Pontoise Cedex, France; fax: 33–1–34326310. You may view this referenced service information at the FAA, Transport Airplane Directorate, 1601 Lind Avenue SW., Renton, WA. For information on the availability of this material at the FAA, call 425–227–1221.

FOR FURTHER INFORMATION CONTACT: Vladimir Ulyanov, Aerospace Engineer, International Branch, ANM–116, Transport Airplane Directorate, FAA, 1601 Lind Avenue SW., Renton, WA 98057–3356; telephone (425) 227–1138; fax (425) 227–1149.

SUPPLEMENTARY INFORMATION:

Discussion

We issued a notice of proposed rulemaking (NPRM) to amend 14 CFR part 39 by adding an AD that would apply to the specified products. The NPRM published in the **Federal Register** on August 1, 2013 (78 FR 46543). The NPRM proposed to correct an unsafe condition for the specified products.

The European Aviation Safety Agency (EASA), which is the Technical Agent for the Member States of the European Community, has issued EASA Airworthiness Directive 2012–0061R1, dated November 30, 2012 (referred to after this as the Mandatory Continuing Airworthiness Information, or ''the MCAI''), to correct an unsafe condition for the specified products. The MCAI states:

> Some Trimmable Horizontal Stabilizer Actuators (THSA), Part Number (P/N) 47147–500, have been found with corrosion, affecting the ballscrew lower splines between the tie bar and the screw-jack.
>
> The results of the technical investigations have identified that the corrosion was caused by a combination of:
>
> —Contact/friction between the tie bar and the inner surface of the ballscrew leading to the removal of Molykote (corrosion protection) at the level of the tie bar splines,
>
> —Humidity ingress initiating surface oxidation starting from areas where Molykote is removed, and
>
> —Water retention in THSA lower part leading to corrosion spread out and to the creation of a brown deposit (iron oxide).
>
> The results of the technical investigations have also concluded that THSA P/N 47147–500 and P/N 47147–700 ballscrews might be affected by this corrosion issue.
>
> THSA P/N 47147–400 ballscrews might be affected as well, but should no longer be in service, and modified into P/N 47147–500, as required by EASA AD 2010–0192 and EASA AD 2010–0193 [and as required by FAA AD 2005–07–04, Amendment 39–14028 (70 FR 16104, March 30, 2005)].
>
> This condition, if not detected and corrected, may lead, in case of ballscrew rupture, to loss of transmission of THSA torque loads from the ballscrew to the tie-bar, prompting THSA blowback, possibly resulting in loss of control of the aeroplane.
>
> To correct this potential unsafe condition, EASA issued AD 2012–0061 to require repetitive [detailed] visual inspections of the ballscrew lower splines of THSA having P/N 47147–500 or P/N 47147–700 to detect corrosion and, depending on findings [ballscrew integrity tests], the accomplishment of applicable corrective actions [replacing the affected THSA with a serviceable or improved THSA].
>
> Since that [EASA] AD [2012–0061] was issued, Airbus published new Service Bulletin (SB) A330–27–3194 or Airbus SB A340–27–4187 (Airbus modification 202802), which allow installation in service of an improved THSA P/N 47172–530.
>
> For the reasons described above, this [EASA] AD [2012–0061R1] is revised to specify that installation of THSA P/N 47172–530 is an alternative (optional) terminating action to the repetitive inspections required by this AD.

You may examine the MCAI in the AD docket on the Internet at *http://www.regulations.gov/#!documentDetail;D=FAA-2013-0665-0002.*

Relevant Service Information

We have received Airbus Mandatory Service Bulletins A330–27–3179 and A340–27–4175, both Revision 01, both dated June 13, 2013; which specify no additional work. We have updated paragraphs (g), (i), and (n) of this final rule to reference this service information. We have also added new paragraph (m) to this final rule to allow credit for the actions specified in paragraphs (g), (i), and (n) of this final rule, if those actions were performed before the effective date of this AD using Airbus Mandatory Service Bulletins A330–27–3179, dated February 14, 2012; or A340–27–4175, dated February 14, 2012. Subsequent paragraphs have been re-designated accordingly.

Comments

We gave the public the opportunity to participate in developing this AD. We received no comments on the NPRM (78 FR 46543, August 1, 2013) or on the determination of the cost to the public.

Conclusion

We reviewed the available data and determined that air safety and the

public interest require adopting this AD with the changes described previously and minor editorial changes. We have determined that these changes:

- Are consistent with the intent that was proposed in the NPRM (78 FR 46543, August 1, 2013) for correcting the unsafe condition; and
- Do not add any additional burden upon the public than was already proposed in the NPRM (78 FR 46543, August 1, 2013).

Costs of Compliance

Based on the service information, we estimate that this AD affects about 30 products of U.S. registry. We also estimate that it takes about 6 work-hours per product to comply with the basic requirements of this AD. The average labor rate is $85 per work-hour. Based on these figures, we estimate the cost of this AD on U.S. operators to be $15,300, or $510 per product.

In addition, we estimate that any necessary follow-on actions would take about 13 work-hours and require parts costing up to $722,556 for a cost of up to $723,661 per product. We have no way of determining the number of products that may need these actions.

Paperwork Reduction Act

A federal agency may not conduct or sponsor, and a person is not required to respond to, nor shall a person be subject to penalty for failure to comply with a collection of information subject to the requirements of the Paperwork Reduction Act unless that collection of information displays a current valid OMB control number. The control number for the collection of information required by this AD is 2120–0056. The paperwork cost associated with this AD has been detailed in the Costs of Compliance section of this document and includes time for reviewing instructions, as well as completing and reviewing the collection of information. Therefore, all reporting associated with this AD is mandatory. Comments concerning the accuracy of this burden and suggestions for reducing the burden should be directed to the FAA at 800 Independence Ave. SW., Washington, DC 20591. ATTN: Information Collection Clearance Officer, AES–200.

Authority for This Rulemaking

Title 49 of the United States Code specifies the FAA's authority to issue rules on aviation safety. Subtitle I, section 106, describes the authority of the FAA Administrator. ''Subtitle VII: Aviation Programs,'' describes in more detail the scope of the Agency's authority.

We are issuing this rulemaking under the authority described in ''Subtitle VII, Part A, Subpart III, Section 44701: General requirements.'' Under that section, Congress charges the FAA with promoting safe flight of civil aircraft in air commerce by prescribing regulations for practices, methods, and procedures the Administrator finds necessary for safety in air commerce. This regulation is within the scope of that authority because it addresses an unsafe condition that is likely to exist or develop on products identified in this rulemaking action.

Regulatory Findings

We determined that this AD will not have federalism implications under Executive Order 13132. This AD will not have a substantial direct effect on the States, on the relationship between the national government and the States, or on the distribution of power and responsibilities among the various levels of government.

For the reasons discussed above, I certify that this AD:

1. Is not a ''significant regulatory action'' under Executive Order 12866;
2. Is not a ''significant rule'' under the DOT Regulatory Policies and Procedures (44 FR 11034, February 26, 1979);
3. Will not affect intrastate aviation in Alaska; and
4. Will not have a significant economic impact, positive or negative, on a substantial number of small entities under the criteria of the Regulatory Flexibility Act.

We prepared a regulatory evaluation of the estimated costs to comply with this AD and placed it in the AD docket.

Examining the AD Docket

You may examine the MCAI in the AD docket on the Internet at *http://www.regulations.gov/#!documentDetail;D=FAA-2013-0665-0002;* or in person at the Docket Operations office between 9 a.m. and 5 p.m., Monday through Friday, except Federal holidays. The AD docket contains this AD, the MCAI, the regulatory evaluation, any comments received, and other information. The street address for the Docket Operations office (telephone (800) 647–5527) is in the **ADDRESSES** section.

List of Subjects in 14 CFR Part 39

Air transportation, Aircraft, Aviation safety, Incorporation by reference, Safety.

Adoption of the Amendment

Accordingly, under the authority delegated to me by the Administrator, the FAA amends 14 CFR part 39 as follows:

PART 39—AIRWORTHINESS DIRECTIVES

■ 1. The authority citation for part 39 continues to read as follows:

Authority: 49 U.S.C. 106(g), 40113, 44701.

§ 39.13 [Amended]

■ 2. The FAA amends § 39.13 by adding the following new AD:

2013–22–02 Airbus: Amendment 39–17634. Docket No. FAA–2013–0665; Directorate Identifier 2012–NM–082–AD.

(a) Effective Date

This airworthiness directive (AD) becomes effective December 5, 2013.

(b) Affected ADs

None.

(c) Applicability

This AD applies to Airbus Model A330–301, –302, –303, –321, –322, –323, –341, –342, and –343 airplanes; and Model A340–211, –212, –213, –311, –312, and –313 airplanes; certificated in any category; all manufacturer serial numbers.

(d) Subject

Air Transport Association (ATA) of America Code 27, Flight controls.

(e) Reason

This AD was prompted by reports of corrosion found on certain trimmable horizontal stabilizer actuators (THSA), affecting the ballscrew lower splines between the tie bar and the screw-jack. We are issuing this AD to detect and correct corrosion of the THSAs, which could lead, in the case of ballscrew rupture, to loss of transmission of THSA torque loads from the ballscrew to the tie-bar, prompting THSA blowback, and possibly resulting in loss of control of the airplane.

(f) Compliance

You are responsible for having the actions required by this AD performed within the compliance times specified, unless the actions have already been done.

(g) Repetitive Inspections

At the applicable time specified in paragraph (g)(1) or (g)(2) of this AD, except as required by paragraphs (h)(1) and (h)(2) of this AD: Do a detailed inspection of the gaps between the screw shaft and tie rod teeth of any THSA having part numbers (P/N) 47147–500 and 47147–700, to determine if the corrosion condition is Type I, Type II, or Type III, in accordance with the Accomplishment Instructions of Airbus Mandatory Service Bulletin A330–27–3179, Revision 01, dated June 13, 2013 (for Model A330–301, –302, –303, –321, –322, –323, –341, –342, and –343 airplanes); or A340–27–4175, Revision 01, dated June 13, 2013 (for Model A340–211, –212, –213, –311, –312, and –313 airplanes); and the Accomplishment Instructions and flowchart

following the Accomplishment Instructions of Goodrich Actuation Systems Service Bulletin 47147–27–18, dated February 17, 2012. Repeat the inspection thereafter at intervals not to exceed 24 months until the modification specified in paragraph (k) is done.

(1) For any THSA, which, as of the effective date of this AD, has accumulated less than 156 months since its first flight on an airplane as THSA P/N 47147–400, or since its first flight after the modification specified in the Accomplishment Instructions of Airbus Mandatory Service Bulletin A330–27–3052 or A340–27–4059 has been done: Do the inspection before the accumulation of 156 months but not before the accumulation of 132 months since first flight on an airplane as THSA P/N 47147–400, or since the THSA's first flight after the modification specified in the Accomplishment Instructions of Airbus Mandatory Service Bulletin A330–27–3052 or A340–27–4059 has been done; or within 3 months after the effective date of this AD; whichever occurs later.

(2) For any THSA, which, as of the effective date of this AD, has accumulated 156 months or more since its first flight on an airplane as THSA P/N 47147–400, or since its first flight after the modification specified in the Accomplishment Instructions of Airbus Mandatory Service Bulletin A330–27–3052 or A340–27–4059 has been done: Do the inspection within 3 months after the effective date of this AD.

(h) Compliance Time Exceptions

(1) Some THSAs having P/N 47147–500 (and further derivative with P/N 47147–700) were originally THSA P/N 47147–400 and were subsequently modified in service. In this case, the time accumulated by any THSA must be calculated from the first installation on airplanes as THSA P/N 47147–400.

(2) Some THSAs having P/N 47147–500 (and further derivative with P/N 47147–700) were originally THSA P/N 47147–200, –210, –213, –300, –303, or –350 and were subsequently modified in service as specified in the Accomplishment Instructions of Airbus Mandatory Service Bulletin A330–27–3052 or A340–27–4059. In this case, the time accumulated by any THSA must be calculated from the first flight on an airplane after the THSA has been modified as specified in the Accomplishment Instructions of Airbus Mandatory Service Bulletin A330–27–3052 or A340–27–4059.

(i) Ballscrew Integrity Test and Corrective Actions

If, during any inspection required by paragraph (g) of this AD, it is determined that a THSA has Type II or Type III corrosion: Before further flight, do a ballscrew integrity test, in accordance with the Accomplishment Instructions of Airbus Mandatory Service Bulletin A330–27–3179, Revision 01, dated June 13, 2013 (for Model A330–301, –302, –303, –321, –322, –323, –341, –342, and –343 airplanes); or A340–27–4175, Revision 01, dated June 13, 2013 (for Model A340–211, –212, –213, –311, –312, and –313 airplanes).

(1) For THSAs having Type II or Type III corrosion, and on which the results of the ballscrew integrity test were not correct, as specified in the Accomplishment Instructions of Airbus Mandatory Service Bulletin A330–27–3179, Revision 01, dated June 13, 2013 (for Model A330–301, –302, –303, –321, –322, –323, –341, –342, and –343 airplanes); or A340–27–4175, Revision 01, dated June 13, 2013 (for Model A340–211, –212, –213, –311, –312, and –313 airplanes): Before further flight, replace the affected THSA with a new or serviceable THSA, in accordance with the Accomplishment Instructions of Airbus Mandatory Service Bulletin A330–27–3179, Revision 01, dated June 13, 2013 (for Model A330–301, –302, –303, –321, –322, –323, –341, –342, and –343 airplanes); or A340–27–4175, Revision 01, dated June 13, 2013 (for Model A340–211, –212, –213, –311, –312, and –313 airplanes).

(2) For THSAs having Type III corrosion, and on which the results of the ballscrew integrity test are correct, as specified in the Accomplishment Instructions of Airbus Mandatory Service Bulletin A330–27–3179, Revision 01, dated June 13, 2013 (for Model A330–301, –302, –303, –321, –322, –323, –341, –342, and –343 airplanes); or A340–27–4175, Revision 01, dated June 13, 2013 (for Model A340–211, –212, –213, –311, –312, and –313 airplanes): Within 10 days after the most recent inspection, replace the THSA with a new or serviceable THSA, in accordance with the Accomplishment Instructions of Airbus Mandatory Service Bulletin A330–27–3179, Revision 01, dated June 13, 2013 (for Model A330–301, –302, –303, –321, –322, –323, –341, –342, and –343 airplanes); or A340–27–4175, Revision 01, dated June 13, 2013 (for Model A340–211, –212, –213, –311, –312, and –313 airplanes).

(3) For THSAs having Type II corrosion, and on which the results of the ballscrew integrity test are correct: Within 24 months or 4,400 flight cycles after the most recent inspection, whichever occurs first, replace the THSA with a new or serviceable THSA, in accordance with the Accomplishment Instructions of Airbus Mandatory Service Bulletin A330–27–3179, Revision 01, dated June 13, 2013 (for Model A330–301, –302, –303, –321, –322, –323, –341, –342, and –343 airplanes); or A340–27–4175, Revision 01, dated June 13, 2013 (for Model A340–211, –212, –213, –311, –312, and –313 airplanes).

(j) Replacement of a THSA Is Not Terminating Action

Replacement of a THSA with a THSA having P/N 47147–500 or 47147–700 does not constitute a terminating action for the repetitive inspections required by paragraph (g) of this AD.

(k) Optional Terminating Modification

(1) Replacing any THSA having P/N 47147–500 with a new improved THSA having P/N 47172–300 (Airbus modification 200238), in accordance with the Accomplishment Instructions of Airbus Service Bulletin A330–27–3182 (for Model A330–301, –302, –303, –321, –322, –323, –341, –342, and –343 airplanes); or A340–27–4178 (for Model A340–211, –212, –213, –311, –312, and –313 airplanes); both dated February 14, 2012; terminates the repetitive inspections required by paragraph (g) of this AD.

(2) Replacing any THSA having P/N 47147–700 with a new improved THSA having P/N 47172–530 (Airbus modification 202802), in accordance with the Accomplishment Instructions of Airbus Service Bulletin A330–27–3194 (for Model A330–301, –302, –303, –321, –322, –323, –341, –342, and –343 airplanes); or A340–27–4187 (for Model A340–211, –212, –213, –311, –312, and –313 airplanes); both dated October 8, 2012; terminates the repetitive inspections required by paragraph (g) of this AD.

(l) Parts Installation Limitation

As of the effective date of this AD, no person may install a THSA, P/N 47147–500 or P/N 47147–700, on any airplane, unless the THSA is classified as Type I (no corrosion), in accordance with the criteria defined in Goodrich Actuation Systems Service Bulletin 47147–27–18, dated February 17, 2012; and thereafter inspected in accordance with the requirements of paragraph (g) of this AD and any applicable actions required by paragraph (i) of this AD are accomplished.

(m) Credit for Previous Actions

(1) This paragraph provides credit for the actions specified in paragraphs (g), (i), and (n) of this AD, if those actions were performed before the effective date of this AD using Airbus Mandatory Service Bulletin A330–27–3179, dated February 14, 2012, which is not incorporated by reference in this AD.

(2) This paragraph provides credit for the actions specified in paragraphs (g), (i), and (n) of this AD, if those actions were performed before the effective date of this AD using Airbus Mandatory Service Bulletin A340–27–4175, dated February 14, 2012, which is not incorporated by reference in this AD.

(n) Reporting

Submit a report of the findings (both positive and negative) of the inspection required by paragraph (g) of this AD to Airbus, at the applicable time specified in paragraph (n)(1) or (n)(2) of this AD, using Appendix 01 of Airbus Mandatory Service Bulletin A330–27–3179, Revision 01, dated June 13, 2013 (for Model A330–301, –302, –303, –321, –322, –323, –341, –342, and –343 airplanes); or A340–27–4175, Revision 01, dated June 13, 2013 (for Model A340–211, –212, –213, –311, –312, and –313 airplanes).

(1) If the inspection was done on or after the effective date of this AD: Submit the report within 90 days after the inspection.

(2) If the inspection was done before the effective date of this AD: Submit the report within 90 days after the effective date of this AD.

(o) Other FAA AD Provisions

The following provisions also apply to this AD:

(1) *Alternative Methods of Compliance (AMOCs):* The Manager, International Branch, ANM–116, Transport Airplane Directorate, FAA, has the authority to approve AMOCs for this AD, if requested using the procedures found in 14 CFR 39.19. In accordance with 14 CFR 39.19, send your

request to your principal inspector or local Flight Standards District Office, as appropriate. If sending information directly to the International Branch, send it to ATTN: Vladimir Ulyanov, Aerospace Engineer, International Branch, ANM–116, Transport Airplane Directorate, FAA, 1601 Lind Avenue SW., Renton, WA 98057–3356; telephone (425) 227–1138; fax (425) 227–1149. Information may be emailed to: *9-ANM-116-AMOC-REQUESTS@faa.gov.* Before using any approved AMOC, notify your appropriate principal inspector, or lacking a principal inspector, the manager of the local flight standards district office/certificate holding district office. The AMOC approval letter must specifically reference this AD.

(2) *Airworthy Product:* For any requirement in this AD to obtain corrective actions from a manufacturer or other source, use these actions if they are FAA-approved. Corrective actions are considered FAA-approved if they are approved by the State of Design Authority (or their delegated agent). You are required to assure the product is airworthy before it is returned to service.

(3) *Reporting Requirements:* A federal agency may not conduct or sponsor, and a person is not required to respond to, nor shall a person be subject to a penalty for failure to comply with a collection of information subject to the requirements of the Paperwork Reduction Act unless that collection of information displays a current valid OMB Control Number. The OMB Control Number for this information collection is 2120–0056. Public reporting for this collection of information is estimated to be approximately 5 minutes per response, including the time for reviewing instructions, completing and reviewing the collection of information. All responses to this collection of information are mandatory. Comments concerning the accuracy of this burden and suggestions for reducing the burden should be directed to the FAA at: 800 Independence Ave. SW., Washington, DC 20591, Attn: Information Collection Clearance Officer, AES–200.

(p) Related Information

(1) Refer to Mandatory Continuing Airworthiness Information (MCAI) EASA Airworthiness Directive 2012–0061R1, dated November 30, 2012, for related information. You may examine the MCAI in the AD docket on the Internet at *http://www.regulations.gov/#!documentDetail;D=FAA-2013-0665-0002.*

(2) Service information identified in this AD that is not incorporated by reference may be obtained at the addresses specified in paragraphs (q)(3) and (q)(4) of this AD.

(q) Material Incorporated by Reference

(1) The Director of the Federal Register approved the incorporation by reference (IBR) of the service information listed in this paragraph under 5 U.S.C. 552(a) and 1 CFR part 51.

(2) You must use this service information as applicable to do the actions required by this AD, unless this AD specifies otherwise.

(i) Airbus Mandatory Service Bulletin A330–27–3179, Including Appendix 01, Revision 01, dated June 13, 2013.

(ii) Airbus Service Bulletin A330–27–3182, dated February 14, 2012.

(iii) Airbus Service Bulletin A330–27–3194, dated October 8, 2012.

(iv) Airbus Mandatory Service Bulletin A340–27–4175, including Appendix 01, Revision 01, dated June 13, 2013.

(v) Airbus Service Bulletin A340–27–4178, dated February 14, 2012.

(vi) Airbus Service Bulletin A340–27–4187, dated October 8, 2012.

(vii) Goodrich Actuation Systems Service Bulletin 47147–27–18, dated February 17, 2012.

(3) For Airbus service information identified in this AD, contact Airbus SAS, Airworthiness Office—EAL, 1 Rond Point Maurice Bellonte, 31707 Blagnac Cedex, France; telephone +33 5 61 93 36 96; fax +33 5 61 93 45 80; email *airworthiness.A330-A340@airbus.com;* Internet *http://www.airbus.com.* For Goodrich Actuation Systems service information identified in this AD, contact Goodrich Corporation, Actuation Systems, Product Support Department 13, Avenue de L'Eguillette—Saint-Ouen L'Aumone Boite Postale 7186 95056, Cergy Pontoise Cedex, France; fax: 33–1–34326310.

(4) You may review copies of the service information at the FAA, Transport Airplane Directorate, 1601 Lind Avenue SW., Renton, WA. For information on the availability of this material at the FAA, call 425–227–1221.

(5) You may view this service information that is incorporated by reference at the National Archives and Records Administration (NARA). For information on the availability of this material at NARA, call 202–741–6030, or go to: *http://www.archives.gov/federal-register/cfr/ibr-locations.html.*

Issued in Renton, Washington, on October 15, 2013.

Jeffrey E. Duven,

Acting Manager, Transport Airplane Directorate, Aircraft Certification Service.

[FR Doc. 2013–25130 Filed 10–30–13; 8:45 am]

BILLING CODE 4910–13–P

DEPARTMENT OF TRANSPORTATION

Federal Aviation Administration

14 CFR Part 39

[Docket No. FAA–2013–0332; Directorate Identifier 2013–NM–009–AD; Amendment 39–17637; AD 2013–22–05]

RIN 2120–AA64

Airworthiness Directives; Bombardier, Inc. Airplanes

AGENCY: Federal Aviation Administration (FAA), Department of Transportation (DOT).

ACTION: Final rule.

SUMMARY: We are adopting a new airworthiness directive (AD) for certain Bombardier, Inc. Model CL–600–2B16 (CL–601–3A, CL–601–3R, and CL–604 Variants) airplanes. This AD was prompted by reports of airspeed mismatch between the pilot and co-pilot's airspeed indicators, which occurred during or after heavy rain. This AD requires, for certain airplanes, inspecting for drain bottles having certain part numbers, and replacing affected drain bottles. This AD requires, for certain other airplanes, replacing drain bottles. We are issuing this AD to prevent pitot static tubing from becoming blocked by water, which if not corrected, could lead to erroneous airspeed and altitude indications, and consequent loss of control of the airplane.

DATES: This AD becomes effective December 5, 2013.

The Director of the Federal Register approved the incorporation by reference of certain publications listed in this AD as of December 5, 2013.

ADDRESSES: You may examine the AD docket on the Internet at *http://www.regulations.gov/#!docketDetail;D=FAA-2013-0332;* or in person at the U.S. Department of Transportation, Docket Operations, M–30, West Building Ground Floor, Room W12–140, 1200 New Jersey Avenue SE., Washington, DC.

For service information identified in this AD, contact Bombardier, Inc., 400 Côte-Vertu Road West, Dorval, Québec H4S 1Y9, Canada; telephone 514–855–5000; fax 514–855–7401; email *thd.crj@aero.bombardier.com;* Internet *http://www.bombardier.com.* You may review copies of the referenced service information at the FAA, Transport Airplane Directorate, 1601 Lind Avenue SW., Renton, WA. For information on the availability of this material at the FAA, call 425–227–1221.

FOR FURTHER INFORMATION CONTACT: Cesar Gomez, Aerospace Engineer, Airframe and Mechanical Systems Branch, ANE–171, FAA, New York Aircraft Certification Office (ACO), 1600 Stewart Avenue, Suite 410, Westbury, New York 11590; telephone (516) 228–7318; fax (516) 794–5531.

SUPPLEMENTARY INFORMATION:

Discussion

We issued a notice of proposed rulemaking (NPRM) to amend 14 CFR part 39 by adding an AD that would apply to the specified products. The NPRM was published in the **Federal Register** on April 17, 2013 (78 FR 22806). The NPRM proposed to correct an unsafe condition for the specified products.

Transport Canada Civil Aviation, which is the aviation authority for Canada, has issued Canadian

Airworthiness Directive CF–2012–30, dated December 7, 2012 (referred to after this as the Mandatory Continuing Airworthiness Information, or ''the MCAI''), to correct an unsafe condition for the specified products. The MCAI states:

A number of reports were received from the operators indicating airspeed mismatch between the pilot and co-pilot's airspeed indicators. The erroneous indication occurred during or after heavy rain. Further investigation revealed that during heavy precipitation, the pitot static tubing may become partially or completely blocked by the water which didn't enter the drain bottle(s). This condition, if not corrected, may result in erroneous airspeed and altitude indications [and consequent loss of control of the airplane].

This [Canadian] AD mandates [for certain airplanes] the replacement of the drain bottles to improve drainage of the pitot-static tubing [and, for certain other airplanes, an inspection for, and replacement of, certain drain bottles].

You may examine the MCAI in the AD docket on the Internet at *http://www.regulations.gov/#!documentDetail;D=FAA-2013-0332-0002.*

Comments

We gave the public the opportunity to participate in developing this AD. We received no comments on the NPRM (78 FR 22806, April 17, 2013) or on the determination of the cost to the public.

Conclusion

We reviewed the available data and determined that air safety and the public interest require adopting the AD as proposed—except for minor editorial changes. We have determined that these minor changes:

- Are consistent with the intent that was proposed in the NPRM (78 FR 22806, April 17, 2013) for correcting the unsafe condition; and
- Do not add any additional burden upon the public than was already proposed in the NPRM (78 FR 22806, April 17, 2013).

Costs of Compliance

We estimate that this AD affects 77 airplanes of U.S. registry.

We estimate the following costs to comply with this AD:

ESTIMATED COSTS

Action	Labor cost	Parts cost	Cost per product	Cost on U.S. operators
Replacement	5 work-hours × $85 per hour = $425	$2,939	$3,364	$259,028

Where the service information lists required parts costs that are covered under warranty, we have assumed that there will be no charge for these parts. As we do not control warranty coverage for affected parties, some parties may incur costs higher than estimated here.

Authority for This Rulemaking

Title 49 of the United States Code specifies the FAA's authority to issue rules on aviation safety. Subtitle I, section 106, describes the authority of the FAA Administrator. ''Subtitle VII: Aviation Programs,'' describes in more detail the scope of the Agency's authority.

We are issuing this rulemaking under the authority described in ''Subtitle VII, Part A, Subpart III, Section 44701: General requirements.'' Under that section, Congress charges the FAA with promoting safe flight of civil aircraft in air commerce by prescribing regulations for practices, methods, and procedures the Administrator finds necessary for safety in air commerce. This regulation is within the scope of that authority because it addresses an unsafe condition that is likely to exist or develop on products identified in this rulemaking action.

Regulatory Findings

We determined that this AD will not have federalism implications under Executive Order 13132. This AD will not have a substantial direct effect on the States, on the relationship between the national government and the States, or on the distribution of power and responsibilities among the various levels of government.

For the reasons discussed above, I certify that this AD:

1. Is not a ''significant regulatory action'' under Executive Order 12866;

2. Is not a ''significant rule'' under the DOT Regulatory Policies and Procedures (44 FR 11034, February 26, 1979);

3. Will not affect intrastate aviation in Alaska; and

4. Will not have a significant economic impact, positive or negative, on a substantial number of small entities under the criteria of the Regulatory Flexibility Act.

We prepared a regulatory evaluation of the estimated costs to comply with this AD and placed it in the AD docket.

Examining the AD Docket

You may examine the AD docket on the Internet at *http://www.regulations.gov/#!documentDetail;D=FAA-2013-0332-0002;* or in person at the Docket Operations office between 9 a.m. and 5 p.m., Monday through Friday, except Federal holidays. The AD docket contains this AD, the regulatory evaluation, any comments received, and other information. The street address for the Docket Operations office (telephone (800) 647–5527) is in the **ADDRESSES** section.

List of Subjects in 14 CFR Part 39

Air transportation, Aircraft, Aviation safety, Incorporation by reference, Safety.

Adoption of the Amendment

Accordingly, under the authority delegated to me by the Administrator, the FAA amends 14 CFR part 39 as follows:

PART 39—AIRWORTHINESS DIRECTIVES

■ 1. The authority citation for part 39 continues to read as follows:

Authority: 49 U.S.C. 106(g), 40113, 44701.

§ 39.13 [Amended]

■ 2. The FAA amends § 39.13 by adding the following new AD:

2013–22–05 Bombardier, Inc.: Amendment 39–17637. Docket No. FAA–2013–0332; Directorate Identifier 2013–NM–009–AD.

(a) Effective Date

This airworthiness directive (AD) becomes effective December 5, 2013.

(b) Affected ADs

None.

(c) Applicability

This AD applies to the airplanes specified in paragraphs (c)(1) and (c)(2) of this AD, certificated in any category.

(1) Bombardier, Inc. Model CL–600–2B16 (CL–601–3A and CL–601–3R Variants) airplanes, serial numbers (S/Ns) 5001 through 5194 inclusive.

(2) Bombardier, Inc. Model CL–600–2B16 (CL–604 Variant) airplanes, S/Ns 5301 through 5665 inclusive, and 5701 through 5918 inclusive.

(d) Subject

Air Transport Association (ATA) of America Code 34, Navigation.

(e) Reason

This AD was prompted by reports of airspeed mismatch between the pilot and co-pilot's airspeed indicators, which occurred during or after heavy rain. We are issuing this AD to prevent pitot static tubing from becoming blocked by water, which if not corrected, could lead to erroneous airspeed and altitude indications, and consequent loss of control of the airplane.

(f) Compliance

You are responsible for having the actions required by this AD performed within the compliance times specified, unless the actions have already been done.

(g) Inspection and Replacement for Certain Model CL–600–2B16 (CL–601–3A and CL–601–3R) Variants Airplanes

For Model CL–600–2B16 (CL–601–3A and CL–601–3R Variants) airplanes having S/Ns 5001 through 5194 inclusive: Within 24 months after the effective date of this AD, inspect for drain bottles having part number (P/N) 50029–001, 50030–001, 9035000, 9035001, 9435014, 9435015, or 601A51704–5.

(1) If none of the part numbers identified in paragraph (g) of this AD are found, no further action is required by this paragraph for that airplane.

(2) If any part number identified in paragraph (g) of this AD is found: Before further flight, replace the drain bottles that are installed on the pitot and static lines of the air data computers (ADC), in accordance with the Accomplishment Instructions of Bombardier Service Bulletin 601–0617, Revision 03, dated December 20, 2012.

(h) Replacement for Certain Model CL–600–2B16 (CL–604 Variant) Airplanes

For Model CL–600–2B16 (CL–604 Variant) airplanes having S/Ns 5301 through 5665 inclusive: Within 24 months after the effective date of this AD, replace drain bottles installed on the pitot and static lines of the ADCs, in accordance with the Accomplishment Instructions of Bombardier Service Bulletin 604–34–065, Revision 02, dated December 20, 2012.

(i) Replacement for Certain Other Model CL–600–2B16 (CL–604 Variants) Airplanes

For Model CL–600–2B16 (CL–604 Variant) airplanes having S/Ns 5701 through 5918 inclusive: Within 24 months after the effective date of this AD, replace drain bottles installed on the pitot and static lines of the ADCs, in accordance with the Accomplishment Instructions of Bombardier Service Bulletin 605–34–027, Revision 02, dated December 20, 2012.

(j) Parts Installation Prohibitions

(1) As of the effective date of this AD, no person may install drain bottles having P/N 50029–001, 50030–001, 9035000, 9035001, 9435014, 9435015, or 601A51704–5 on any Model CL–600–2B16 (CL–601–3A and CL–601–3R Variants) airplane.

(2) As of the effective date of this AD, no person may install drain bottles having P/N 50029–001, 50030–001, 9035000, 9035001, 9435014, or 9435015 on the pitot and static lines of the ADCs; or drain bottles having P/N 50030–001, 50034–002, 9435014, or 9035001 on the pitot line of the integrated stand-by instrument (ISI); on any Model CL–600–2B16 (CL–604 Variant) airplanes, S/N 5301 through 5665 inclusive.

(3) As of the effective date of this AD, no person may install drain bottles having P/N 50029–001 or 50030–001 on the pitot and static lines of the ADCs; or P/N 50030–001 or 50034–002 on the pitot line of the ISI; on any Model CL–600–2B16 (CL–604 Variant) airplanes.

(k) Credit for Previous Actions

(1) This paragraph provides credit for actions required by paragraph (g) of this AD, if those actions were performed before the effective date of this AD using a service bulletin specified in paragraphs (k)(1)(i) through (k)(1)(iii) of this AD.

(i) Bombardier Service Bulletin 601–0617, Revision 02, dated November 14, 2012, which is not incorporated by reference in this AD.

(ii) Bombardier Service Bulletin 601–0617, Revision 01, dated November 12, 2012, which is not incorporated by reference in this AD.

(iii) Bombardier Service Bulletin 601–0617, dated July 31, 2012, which is not incorporated by reference in this AD.

(2) This paragraph provides credit for actions required by paragraph (h) of this AD, if those actions were performed before the effective date of this AD using a service bulletin specified in paragraph (k)(2)(i) or (k)(2)(ii) of this AD.

(i) Bombardier Service Bulletin 604–34–065, Revision 01, dated October 15, 2012, which is not incorporated by reference in this AD.

(ii) Bombardier Service Bulletin 604–34–065, dated July 31, 2012, which is not incorporated by reference in this AD.

(3) This paragraph provides credit for actions required by paragraph (i) of this AD, if those actions were performed before the effective date of this AD using a service bulletin specified in paragraph (k)(3)(i) or (k)(3)(ii) of this AD.

(i) Bombardier Service Bulletin 605–34–027, Revision 01, dated October 15, 2012, which is not incorporated by reference in this AD.

(ii) Bombardier Service Bulletin 605–34–027, dated July 31, 2012, which is not incorporated by reference in this AD.

(l) Other FAA AD Provisions

The following provisions also apply to this AD:

(1) *Alternative Methods of Compliance (AMOCs):* The Manager, New York Aircraft Certification Office (ACO), ANE–170, FAA, has the authority to approve AMOCs for this AD, if requested using the procedures found in 14 CFR 39.19. In accordance with 14 CFR 39.19, send your request to your principal inspector or local Flight Standards District Office, as appropriate. If sending information directly to the ACO, send it to ATTN: Program Manager, Continuing Operational Safety, FAA, New York ACO, 1600 Stewart Avenue, Suite 410, Westbury, NY 11590; telephone 516–228–7300; fax 516–794–5531. Before using any approved AMOC, notify your appropriate principal inspector, or lacking a principal inspector, the manager of the local flight standards district office/certificate holding district office. The AMOC approval letter must specifically reference this AD.

(2) *Airworthy Product:* For any requirement in this AD to obtain corrective actions from a manufacturer or other source, use these actions if they are FAA-approved. Corrective actions are considered FAA-approved if they are approved by the State of Design Authority (or their delegated agent). You are required to assure the product is airworthy before it is returned to service.

(m) Related Information

(1) Refer to Mandatory Continuing Airworthiness Information Canadian Airworthiness Directive CF–2012–30, dated December 7, 2012, for related information.

You may examine the MCAI in the AD docket on the Internet at *http://www.regulations.gov/#!documentDetail;D=FAA-2013-0332-0002*.

(2) Service information identified in this AD that is not incorporated by reference may be obtained at the address specified in paragraph (n)(3) of this AD

(n) Material Incorporated by Reference

(1) The Director of the Federal Register approved the incorporation by reference (IBR) of the service information listed in this paragraph under 5 U.S.C. 552(a) and 1 CFR part 51.

(2) You must use this service information as applicable to do the actions required by this AD, unless the AD specifies otherwise.

(i) Bombardier Service Bulletin 601–0617, Revision 03, dated December 20, 2012.

(ii) Bombardier Service Bulletin 604–34–065, Revision 02, dated December 20, 2012.

(iii) Bombardier Service Bulletin 605–34–027, Revision 02, dated December 20, 2012.

(3) For service information identified in this AD, contact Bombardier, Inc., 400 Côte-Vertu Road West, Dorval, Québec H4S 1Y9, Canada; telephone 514–855–5000; fax 514–855–7401; email *thd.crj@aero.bombardier.com;* Internet *http://www.bombardier.com*.

(4) You may review copies of the service information at the FAA, Transport Airplane Directorate, 1601 Lind Avenue SW., Renton, WA. For information on the availability of this material at the FAA, call 425–227–1221.

(5) You may view this service information that is incorporated by reference at the National Archives and Records Administration (NARA). For information on the availability of this material at NARA, call 202–741–6030, or go to: *http://www.archives.gov/federal-register/cfr/ibr-locations.html*.

Issued in Renton, Washington, on October 15, 2013.

Jeffrey E. Duven,

Acting Manager, Transport Airplane Directorate, Aircraft Certification Service.

[FR Doc. 2013–25306 Filed 10–30–13; 8:45 am]

BILLING CODE 4910–13–P

DEPARTMENT OF TRANSPORTATION

Federal Aviation Administration

14 CFR Part 39

[Docket No. FAA–2013–0666; Directorate Identifier 2013–NM–060–AD; Amendment 39–17635; AD 2013–22–03]

RIN 2120–AA64

Airworthiness Directives; The Boeing Company Airplanes

AGENCY: Federal Aviation Administration (FAA), DOT.

ACTION: Final rule.

SUMMARY: We are adopting a new airworthiness directive (AD) for all The Boeing Company Model 727 airplanes. This AD was prompted by reports indicating that a standard fuel tank access door was located where an impact-resistant access door was required, and stencils were missing from some impact-resistant access doors. This AD requires an inspection of the left- and right-hand wing fuel tank access doors to determine that impact-resistant access doors are installed in the correct locations, and to replace any door with an impact-resistant access door if necessary. This AD also requires an inspection for stencils and index markers on impact-resistant access doors, and application of new stencils or index markers if necessary. This AD also requires revising the maintenance program to incorporate changes to the airworthiness limitations section. We are issuing this AD to prevent foreign object penetration of the fuel tank, which could cause a fuel leak near an ignition source (e.g., hot brakes), consequently leading to a fuel-fed fire.

DATES: This AD is effective December 5, 2013.

The Director of the Federal Register approved the incorporation by reference of certain publications listed in this AD as of December 5, 2013.

ADDRESSES: For service information identified in this AD, contact Boeing Commercial Airplanes, Attention: Data & Services Management, P.O. Box 3707, MC 2H–65, Seattle, WA 98124–2207; telephone 206–544–5000, extension 1; fax 206–766–5680; Internet *https://www.myboeingfleet.com.* You may review this referenced service information at the FAA, Transport Airplane Directorate, 1601 Lind Avenue SW., Renton, WA. For information on the availability of this material at the FAA, call 425–227–1221.

Examining the AD Docket

You may examine the AD docket on the Internet at *http://www.regulations.gov;* or in person at the Docket Management Facility between 9 a.m. and 5 p.m., Monday through Friday, except Federal holidays. The AD docket contains this AD, the regulatory evaluation, any comments received, and other information. The address for the Docket Office (phone: 800–647–5527) is Document Management Facility, U.S. Department of Transportation, Docket Operations, M–30, West Building Ground Floor, Room W12–140, 1200 New Jersey Avenue SE., Washington, DC 20590.

FOR FURTHER INFORMATION CONTACT: Suzanne Lucier, Aerospace Engineer, Propulsion Branch, ANM–140S, FAA, Seattle Aircraft Certification Office, 1601 Lind Avenue SW., Renton, WA 98057–3356; phone: 425–917–6438; fax: 425–917–6590; email: *suzanne.lucier@faa.gov.*

SUPPLEMENTARY INFORMATION:

Discussion

We issued a notice of proposed rulemaking (NPRM) to amend 14 CFR part 39 by adding an AD that would apply to the specified products. The NPRM published in the **Federal Register** on August 1, 2013 (78 FR 46538). The NPRM proposed to require an inspection of the left- and right-hand wing fuel tank access doors to determine that impact-resistant access doors are installed in the correct locations, and to replace any door with an impact-resistant access door if necessary. The NPRM also proposed to require an inspection for stencils and index markers on impact-resistant access doors, and application of new stencils or index markers if necessary. The NPRM also proposed to require revising the maintenance program to incorporate changes to the airworthiness limitations section.

Comments

We gave the public the opportunity to participate in developing this AD. We have considered the comment received. The Boeing Company supported the NPRM (78 FR 46538, August 1, 2013).

Conclusion

We reviewed the relevant data, considered the comments received, and determined that air safety and the public interest require adopting this AD as proposed—except for minor editorial changes. We have determined that these minor changes:

- Are consistent with the intent that was proposed in the NPRM (78 FR 46538, August 1, 2013) for correcting the unsafe condition; and
- Do not add any additional burden upon the public than was already proposed in the NPRM (78 FR 46538, August 1, 2013).

Costs of Compliance

We estimate that this AD affects 139 airplanes of U.S. registry. We estimate the following costs to comply with this AD:

ESTIMATED COSTS

Action	Labor cost	Parts cost	Cost per product	Cost on U.S. operators
Inspection	Up to 3 work-hours × $85 per hour = $255	$0	$255	$35,445
Maintenance program revision	1 work-hour × $85 per hour = $85	0	85	11,815

We estimate the following costs to do any necessary replacements that would be required based on the results of the inspection. We have no way of determining the number of aircraft that might need these replacements:

ON-CONDITION COSTS

Action	Labor cost	Parts cost	Cost per product
Replacement per door	3 work-hours × $85 per hour = $255	$8,000	$8,255
Stencil and index marker	Up to 2 work-hours × $85 per hour = $170	0	170

According to the manufacturer, some of the costs of this AD may be covered under warranty, thereby reducing the cost impact on affected individuals. We do not control warranty coverage for affected individuals. As a result, we have included all costs in our cost estimate.

Authority for This Rulemaking

Title 49 of the United States Code specifies the FAA's authority to issue rules on aviation safety. Subtitle I, section 106, describes the authority of the FAA Administrator. Subtitle VII: Aviation Programs, describes in more detail the scope of the Agency's authority.

We are issuing this rulemaking under the authority described in Subtitle VII, Part A, Subpart III, Section 44701: ''General requirements.'' Under that section, Congress charges the FAA with promoting safe flight of civil aircraft in air commerce by prescribing regulations for practices, methods, and procedures the Administrator finds necessary for safety in air commerce. This regulation is within the scope of that authority because it addresses an unsafe condition that is likely to exist or develop on products identified in this rulemaking action.

Regulatory Findings

This AD will not have federalism implications under Executive Order 13132. This AD will not have a substantial direct effect on the States, on the relationship between the national government and the States, or on the distribution of power and responsibilities among the various levels of government.

For the reasons discussed above, I certify that this AD:

(1) Is not a ''significant regulatory action'' under Executive Order 12866,

(2) Is not a ''significant rule'' under DOT Regulatory Policies and Procedures (44 FR 11034, February 26, 1979),

(3) Will not affect intrastate aviation in Alaska, and

(4) Will not have a significant economic impact, positive or negative, on a substantial number of small entities under the criteria of the Regulatory Flexibility Act.

List of Subjects in 14 CFR Part 39

Air transportation, Aircraft, Aviation safety, Incorporation by reference, Safety.

Adoption of the Amendment

Accordingly, under the authority delegated to me by the Administrator, the FAA amends 14 CFR part 39 as follows:

PART 39—AIRWORTHINESS DIRECTIVES

■ 1. The authority citation for part 39 continues to read as follows:

Authority: 49 U.S.C. 106(g), 40113, 44701.

§ 39.13 [Amended]

■ 2. The FAA amends § 39.13 by adding the following new airworthiness directive (AD):

2013–22–03 The Boeing Company: Amendment 39–17635; Docket No. FAA–2013–0666; Directorate Identifier 2013–NM–060–AD.

(a) Effective Date

This AD is effective December 5, 2013.

(b) Affected ADs

None.

(c) Applicability

This AD applies to all The Boeing Company Model 727, 727C, 727–100, 727–100C, 727–200, and 727–200F series airplanes; certificated in any category.

(d) Subject

Joint Aircraft System Component (JASC)/ Air Transport Association (ATA) of America Code 28, Fuel.

(e) Unsafe Condition

This AD was prompted by reports indicating that a standard fuel tank access door was located where an impact-resistant access door was required, and stencils were missing from some impact-resistant access doors. We are issuing this AD to prevent foreign object penetration of the fuel tank, which could cause a fuel leak near an ignition source (e.g., hot brakes), consequently leading to a fuel-fed fire.

(f) Compliance

Comply with this AD within the compliance times specified, unless already done.

(g) Inspections

Within 72 months after the effective date of this AD, do the actions specified in paragraphs (g)(1) and (g)(2) of this AD, in accordance with the Accomplishment Instructions of Boeing Service Bulletin 727–28–0134, dated January 12, 2012.

(1) Do either a general visual inspection or ultrasonic non-destructive test of the left- and right-hand wing fuel tank access doors to determine whether impact-resistant access doors are installed in the correct locations. If any standard access door is found, before further flight, replace with an impact-resistant access door, in accordance with the Accomplishment Instructions of Boeing Service Bulletin 727–28–0134, dated January 12, 2012.

(2) Do a general visual inspection of the left- and right-hand wing fuel tank impact-resistant access doors to verify stencils and index markers are applied. If a stencil or index marker is missing, before further flight, apply stencil or index marker, as applicable, in accordance with the Accomplishment Instructions of Boeing Service Bulletin 727–28–0134, dated January 12, 2012.

(h) Maintenance Program Revision

Within 60 days after the effective date of this AD, revise the maintenance program to incorporate Critical Design Configuration Control Limitation (CDCCL) Task 57–AWL–01, ''Impact-Resistant Fuel Tank Access Door,'' of Section 1, Airworthiness Limitations (AWLs) of Boeing 727–100/200 Airworthiness Limitations (AWLs) Document D6–8766–AWL, Revision September 2012.

(i) No Alternative CDCCLs

After accomplishing the revision required by paragraph (h) of this AD, no alternative CDCCLs may be used unless the CDCCLs are approved as an alternative method of compliance in accordance with the procedures specified in paragraph (j) of this AD.

(j) Alternative Methods of Compliance (AMOCs)

(1) The Manager, Seattle Aircraft Certification Office (ACO), FAA, has the authority to approve AMOCs for this AD, if requested using the procedures found in 14 CFR 39.19. In accordance with 14 CFR 39.19, send your request to your principal inspector or local Flight Standards District Office, as appropriate. If sending information directly to the manager of the ACO, send it to the attention of the person identified in paragraph (k) of this AD. Information may be emailed to: *9-ANM-Seattle-ACO-AMOC-Requests@faa.gov*.

(2) Before using any approved AMOC, notify your appropriate principal inspector, or lacking a principal inspector, the manager of the local flight standards district office/ certificate holding district office.

(3) An AMOC that provides an acceptable level of safety may be used for any repair

required by this AD if it is approved by the Boeing Commercial Airplanes Organization Designation Authorization (ODA) that has been authorized by the Manager, Seattle ACO to make those findings. For a repair method to be approved, the repair must meet the certification basis of the airplane, and the approval must specifically refer to this AD.

(k) Related Information

For more information about this AD, contact Suzanne Lucier, Aerospace Engineer, Propulsion Branch, ANM–140S, FAA, Seattle Aircraft Certification Office, 1601 Lind Avenue SW., Renton, WA 98057–3356; phone: 425–917–6438; fax: 425–917–6590; email: *suzanne.lucier@faa.gov*.

(l) Material Incorporated by Reference

(1) The Director of the Federal Register approved the incorporation by reference (IBR) of the service information listed in this paragraph under 5 U.S.C. 552(a) and 1 CFR part 51.

(2) You must use this service information as applicable to do the actions required by this AD, unless the AD specifies otherwise.

(i) Boeing Service Bulletin 727–28–0134, dated January 12, 2012.

(ii) Critical Design Configuration Control Limitation (CDCCL) Task 57–AWL–01, ''Impact-Resistant Fuel Tank Access Door,'' of Section 1, Airworthiness Limitations (AWLs) of Boeing 727–100/200 Airworthiness Limitations (AWLs) Document D6–8766–AWL, Revision September 2012.

(3) For service information identified in this AD, contact Boeing Commercial Airplanes, Attention: Data & Services Management, P.O. Box 3707, MC 2H–65, Seattle, WA 98124–2207; telephone 206–544–5000, extension 1; fax 206–766–5680; Internet *https://www.myboeingfleet.com*.

(4) You may view this service information at FAA, Transport Airplane Directorate, 1601 Lind Avenue SW., Renton, WA. For information on the availability of this material at the FAA, call 425–227–1221.

(5) You may view this service information that is incorporated by reference at the National Archives and Records Administration (NARA). For information on the availability of this material at NARA, call 202–741–6030, or go to: *http://www.archives.gov/federal-register/cfr/ibr-locations.html*.

Issued in Renton, Washington, on October 15, 2013.

Jeffrey E. Duven,

Acting Manager, Transport Airplane Directorate, Aircraft Certification Service.

[FR Doc. 2013–25132 Filed 10–30–13; 8:45 am]

BILLING CODE 4910–13–P

DEPARTMENT OF TRANSPORTATION

Federal Aviation Administration

14 CFR Part 39

[Docket No. FAA–2013–0486; Directorate Identifier 2010–SW–031–AD; Amendment 39–17622; AD 2013–20–16]

RIN 2120–AA64

Airworthiness Directives; MD Helicopters, Inc. (MDHI) Helicopters

AGENCY: Federal Aviation Administration (FAA), DOT.

ACTION: Final rule.

SUMMARY: We are adopting a new airworthiness directive (AD) for MDHI Model MD900 helicopters with certain main rotor blade (MRB) retention bolts (bolts) installed. This AD requires a daily check of the position of each bolt, a daily check and a repetitive inspection for a gap in each bolt, and, if necessary, removing and inspecting the bolt for a crack and replacing any cracked bolt with an airworthy bolt. This AD was prompted by multiple reports of in-service bolt failures. The actions are intended to prevent failure of a bolt, which could lead to loss of MRB structural integrity and subsequent loss of control of the helicopter.

DATES: This AD is effective December 5, 2013.

ADDRESSES: For service information identified in this AD, contact MDHI, Attn: Customer Support Division, 4555 E. McDowell Rd., Mail Stop M615, Mesa, AZ 85215–9734, telephone (800) 388–3378, fax (480) 346–6813, or at *http://www.mdhelicopters.com*. You may review a copy of the referenced service information at the FAA, Office of the Regional Counsel, Southwest Region, 2601 Meacham Blvd., Room 663, Fort Worth, Texas 76137.

Examining the AD Docket

You may examine the AD docket on the Internet at *http://www.regulations.gov* or in person at the Docket Operations Office between 9 a.m. and 5 p.m., Monday through Friday, except Federal holidays. The AD docket contains this AD, the economic evaluation, any comments received, and other information. The street address for the Docket Operations Office (phone: 800–647–5527) is U.S. Department of Transportation, Docket Operations Office, M–30, West Building Ground Floor, Room W12–140, 1200 New Jersey Avenue SE., Washington, DC 20590.

FOR FURTHER INFORMATION CONTACT: Roger Durbin, Aerospace Engineer, FAA, Los Angeles Aircraft Certification Office, Airframe Branch, ANM–120L, 3960 Paramount Blvd., Lakewood, CA 90712, telephone (562) 627–5233, fax (562) 627–5210, email *roger.durbin@faa.gov*.

SUPPLEMENTARY INFORMATION:

Discussion

On June 14, 2013, at 78 FR 35773, the **Federal Register** published our notice of proposed rulemaking (NPRM), which proposed to amend 14 CFR part 39 to add an AD that would apply to MDHI Model MD900 helicopters with certain bolts installed. The NPRM proposed to require a daily check of the position of each bolt, a daily check and a repetitive inspection for a gap in each bolt, and, if necessary, removing and inspecting the bolt for a crack and replacing any cracked bolt with an airworthy bolt. The NPRM was prompted by multiple reports of in-service bolt failures. The proposed requirements were intended to prevent failure of a bolt, which could lead to loss of MRB structural integrity and subsequent loss of control of the helicopter.

Comments

We gave the public the opportunity to participate in developing this AD, but we did not receive any comments on the NPRM (78 FR 35773, June 14, 2013).

FAA's Determination

We have reviewed the relevant information and determined that an unsafe condition exists and is likely to exist or develop on other helicopters of the same type designs and that air safety and the public interest require adopting the AD requirements as proposed.

Related Service Information

MDHI issued Alert Service Bulletin SB900–116R1, dated April 9, 2010 (ASB SB900–116R1), which supersedes ASB SB900–116, dated February 24, 2010 (ASB SB900–116).

ASB SB900–116 specifies a repetitive check of the blade retention bolts, part number (P/N) 900R3100001–103 and 900R3100001–105, for a gap and, depending on the outcome of the inspection, removing and inspecting the bolt for damage. The ASB also specifies a repetitive force check of each bolt, P/N 900R3100001–103, and a torque check of each bolt, P/N 900R3100001–105. Lastly, the ASB specifies a daily preflight check of each bolt to examine the position of the bolt and for a gap, and, if any bolt has moved up or down or if there was no gap, removing and inspecting the bolt.

Superseding ASB SB900–116R1 retains the same specifications as ASB SB90016, except that it revises the

interval for the bolt force and torque checks from 4–6 flight-hours to 8–10 flight-hours. ASB SB90016R1 also revises the change of force or torque from not more than 10 percent to not more than ±10 percent.

Differences Between This AD and the Service Information

This AD uses the term ''inspect'' when describing the action of inspecting a bolt for a crack and inspecting for a gap between the thrust washer and the retainer. The ASB uses the term ''check.''

Costs of Compliance

We estimate that this AD will affect 29 helicopters in the U.S. registry. We estimate that operators may incur the following costs to comply with this AD: The average labor rate is $85 per work hour. It will take about .5 work hour to do a gap inspection of each bolt. It will take about 1 work hour to replace a cracked bolt and the required parts will cost $800 at a total cost per helicopter of $928.

Authority for This Rulemaking

Title 49 of the United States Code specifies the FAA's authority to issue rules on aviation safety. Subtitle I, section 106, describes the authority of the FAA Administrator. Subtitle VII: Aviation Programs, describes in more detail the scope of the Agency's authority.

We are issuing this rulemaking under the authority described in Subtitle VII, Part A, Subpart III, Section 44701: ''General requirements.'' Under that section, Congress charges the FAA with promoting safe flight of civil aircraft in air commerce by prescribing regulations for practices, methods, and procedures the Administrator finds necessary for safety in air commerce. This regulation is within the scope of that authority because it addresses an unsafe condition that is likely to exist or develop on products identified in this rulemaking action.

Regulatory Findings

This AD will not have federalism implications under Executive Order 13132. This AD will not have a substantial direct effect on the States, on the relationship between the national government and the States, or on the distribution of power and responsibilities among the various levels of government.

For the reasons discussed above, I certify that this AD:

(1) Is not a ''significant regulatory action'' under Executive Order 12866;

(2) Is not a ''significant rule'' under DOT Regulatory Policies and Procedures (44 FR 11034, February 26, 1979);

(3) Will not affect intrastate aviation in Alaska to the extent that it justifies making a regulatory distinction; and

(4) Will not have a significant economic impact, positive or negative, on a substantial number of small entities under the criteria of the Regulatory Flexibility Act.

We prepared an economic evaluation of the estimated costs to comply with this AD and placed it in the AD docket.

List of Subjects in 14 CFR Part 39

Air transportation, Aircraft, Aviation safety, Incorporation by reference, Safety.

Adoption of the Amendment

Accordingly, under the authority delegated to me by the Administrator, the FAA amends 14 CFR part 39 as follows:

PART 39—AIRWORTHINESS DIRECTIVES

■ 1. The authority citation for part 39 continues to read as follows:

Authority: 49 U.S.C. 106(g), 40113, 44701.

§ 39.13 [Amended]

■ 2. The FAA amends § 39.13 by adding the following new airworthiness directive (AD):

2013–20–16 MD Helicopters, Inc. (MDHI): Amendment 39–17622; Docket No. FAA–2013–0486; Directorate Identifier 2010–SW–031–AD.

(a) Applicability

This AD applies to Model MD 900 helicopters with a main rotor blade retention bolt (bolt), part number (P/N) 900R3100001–103 or 900R3100001–105, installed; certificated in any category.

(b) Unsafe Condition

This AD defines the unsafe condition as bolt failure. This condition could result in loss of main rotor blade structural integrity and subsequent loss of control of the helicopter.

(c) Effective Date

This AD becomes effective December 5, 2013.

(d) Compliance

You are responsible for performing each action required by this AD within the specified compliance time unless it has already been accomplished prior to that time.

(e) Required Actions

(1) Before the first flight of each day:

(i) Visually check each bolt for failure. Failure of a bolt may be indicated by movement of the bolt out of the bolt hole or by inconsistent extension of the bolt above or below the other bolts being inspected (a failed bolt migrates out of the bolt hole).

(ii) Visually check for a gap between the thrust washer and the retainer, P/N 900R2100009–101 or –103. The thrust washer is depicted as item 2 and the retainer is depicted as item 8 in Figure 1 to paragraph (e) of this AD.

BILLING CODE 4910–13–P

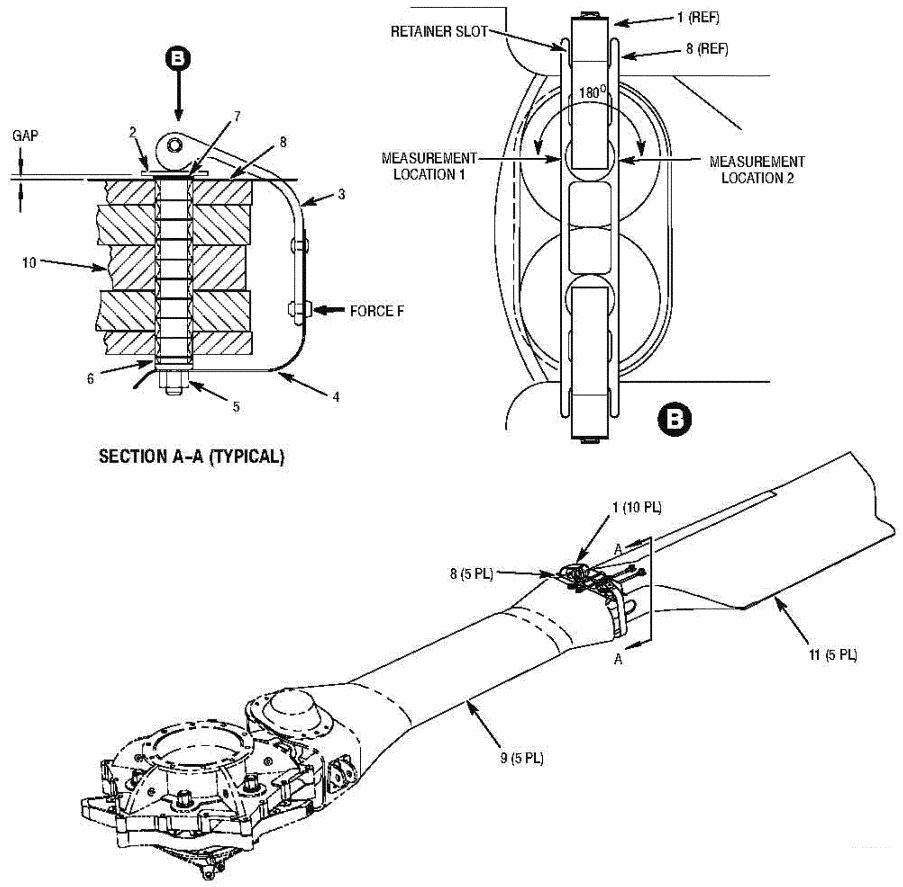

Figure 1 to Paragraph (e)
Gap and Force Check of the Blade Retention Bolts

BILLING CODE 4910–13–C

(iii) The actions required by paragraphs (e)(1)(i) and (e)(1)(ii) may be performed by the owner/operator (pilot) holding at least a private pilot certificate and must be entered into the aircraft maintenance records showing compliance with this AD in accordance with 14 CFR 43.9(a)(1)–(4) and 14 CFR 91.417(a)(2)(v). The record must be maintained as required by 14 CFR 91.417, 121.380, or 135.439.

(iv) If there is any indication of bolt failure or if there is no gap between the thrust washer and retainer, before further flight, remove and inspect the bolt for a crack. Replace any cracked bolt with an airworthy bolt.

(2) Within 300 hours time-in-service (TIS), and thereafter at intervals not to exceed 300 hours TIS, inspect each bolt for a gap between the thrust washer and the retainer.

(i) Determine whether an O-ring is installed. Install any missing O-ring.

(ii) If there is no gap between the thrust washer and retainer, before further flight, remove and inspect the bolt for a crack. Replace any cracked bolt with an airworthy bolt.

(iii) If there is a gap between the thrust washer and retainer, measure the gap in two locations, 180 degrees apart, with a feeler gage. If the gap is more than 0.100 inch (2.54 mm) at either location, before further flight, remove and inspect the bolt for a crack. Replace any cracked bolt with an airworthy bolt.

(f) Alternative Methods of Compliance (AMOCs)

(1) The Manager, Los Angeles Aircraft Certification Office, Airframe Branch (ANM–120L), FAA, may approve AMOCs for this AD. Send your request to Roger Durbin, Aerospace Engineer, FAA, Los Angeles Aircraft Certification Office, Airframe Branch, ANM–120L, 3960 Paramount Blvd., Lakewood, CA 90712, telephone (562) 627–5233, fax (562) 627–5210, email *roger.durbin@faa.gov.*

(2) For operations conducted under a 14 CFR part 119 operating certificate or under 14 CFR part 91, subpart K, we suggest that you notify your principal inspector or lacking a principal inspector, the manager of the local flight standards district office or certificate holding district office before operating any aircraft complying with this AD through an AMOC.

(g) Additional Information

MDHI Alert Service Bulletin SB900–116R1, dated April 9, 2010, which supersedes MDHI Alert Service Bulletin SB SB900–116, dated February 24, 1010, neither of which is incorporated by reference, contains additional information about the subject of this AD. For service information identified in this AD, contact MDHI, Attn: Customer Support Division, 4555 E. McDowell Rd., Mail Stop M615, Mesa, AZ 85215–9734, telephone (800) 388–3378, fax (480) 346–6813, or at *http://www.mdhelicopters.com.* You may review copies of the service information at the FAA, Office of the Regional Counsel, Southwest Region, 2601 Meacham Blvd., Room 663, Fort Worth, Texas.

(h) Subject

Joint Aircraft System Component: 6210: Main rotor blade retention bolts.

Issued in Fort Worth, Texas, on September 27, 2013.

Lance T. Gant,

Acting Directorate Manager, Rotorcraft Directorate, Aircraft Certification Service.

[FR Doc. 2013–25702 Filed 10–30–13; 8:45 am]

BILLING CODE 4910–13–P

DEPARTMENT OF TRANSPORTATION

Federal Aviation Administration

14 CFR Part 39

[Docket No. FAA–2012–0594; Directorate Identifier 2012–NM–019–AD; Amendment 39–17641; AD 2013–22–09]

RIN 2120–AA64

Airworthiness Directives; Bombardier, Inc. Airplanes

AGENCY: Federal Aviation Administration (FAA), Department of Transportation (DOT).

ACTION: Final rule.

SUMMARY: We are adopting a new airworthiness directive (AD) for certain Bombardier, Inc. Model DHC–8–400, –401, and –402 airplanes. This AD was prompted by reports of movement of the rudder pedals being impeded due to corrosion of the trunnion shaft of the rudder feel trim unit (RFTU). This AD requires an inspection to determine if certain RFTUs are installed, an operational check for signs of seizure of affected parts, repetitive lubrication of certain RFTUs, and replacement of the RFTU if necessary. Installing replacement RFTUs having conformal bushings terminates the repetitive lubrication requirements. We are issuing this AD to detect and correct any sign of rough movement or seizure of the trunnion shaft and its bushing, which could cause a rudder control jam or a large and rapid alternating rudder input leading to a structural failure of the vertical fin.

DATES: This AD becomes effective December 5, 2013.

The Director of the Federal Register approved the incorporation by reference of a certain publication listed in this AD as of December 5, 2013.

ADDRESSES: You may examine the AD docket on the Internet at *http://www.regulations.gov/#!docketDetail;D=FAA-2012-0594* or in person at the U.S. Department of Transportation, Docket Operations, M–30, West Building Ground Floor, Room W12–140, 1200 New Jersey Avenue SE., Washington, DC.

For service information identified in this AD, contact Bombardier, Inc., Q-Series Technical Help Desk, 123 Garratt Boulevard, Toronto, Ontario M3K 1Y5, Canada; telephone 416–375–4000; fax 416–375–4539; email *thd.qseries@aero.bombardier.com*; Internet *http://www.bombardier.com.* You may view this referenced service information at the FAA, Transport Airplane Directorate, 1601 Lind Avenue SW., Renton, WA. For information on the availability of this material at the FAA, call 425–227–1221.

FOR FURTHER INFORMATION CONTACT: Cesar Gomez, Aerospace Engineer, Airframe and Mechanical Systems Branch, ANE–171, FAA, New York Aircraft Certification Office, 1600 Stewart Avenue, Suite 410, Westbury, New York 11590; telephone (516) 228–7318; fax (516) 794–5531.

SUPPLEMENTARY INFORMATION:

Discussion

We issued a supplemental notice of proposed rulemaking (SNPRM) to amend 14 CFR part 39 by adding an AD that would apply to the specified products. The SNPRM was published in the **Federal Register** on March 12, 2013 (78 FR 15655). We preceded the SNPRM with a notice of proposed rulemaking (NPRM), which published in the **Federal Register** on June 12, 2012 (77 FR 34874). The NPRM and the SNPRM both proposed to correct an unsafe condition for the specified products.

Transport Canada Civil Aviation (TCCA), which is the aviation authority for Canada, has issued Canadian Airworthiness Directive CF–2012–02R1, dated October 12, 2012 (referred to after this as the Mandatory Continuing Airworthiness Information, or ''the MCAI''), to correct an unsafe condition for the specified products. The MCAI states:

> There have been several reported incidents on DHC–8 Series 400 aeroplanes where the movement of the rudder pedals has been impeded. An investigation showed that the Rudder Feel Trim Unit (RFTU) trunnion shaft was corroded. The root cause of the corrosion was a quality escape where cadmium plating on the trunnion bushing within the RFTU assembly was not removed. Corrosion on the shaft and in the trunnion bushing seized the trunnion and caused difficulties in controlling the rudder movement.
>
> This condition, if not corrected, could cause a rudder control jam or a large and rapid alternating rudder input leading to a structural failure of the vertical fin.
>
> This [TCCA] Airworthiness Directive (AD) is issued [inspect to determine serial number, an operational check for seizure, repetitive lubrication and] to replace the affected RFTUs to limit the possibility of binding and replace the affected RFTUs with units that have been reworked with conformal bushings to terminate the lubrication requirements.

You may examine the MCAI in the AD docket on the Internet at *http://www.regulations.gov/#!documentDetail;D=FAA-2012-0594-0006.*

Comments

We gave the public the opportunity to participate in developing this AD. We considered the comments received.

Request To Revise Compliance Time for Operational Check

Horizon Air (Horizon) requested that paragraph (g)(2) of the SNPRM (78 FR 15655, March 12, 2013) be revised to allow operators that perform a review of airplane maintenance records, in lieu of visually inspecting the serial number of the RFTU, time to schedule the operational check specified by paragraph (g)(2) of the SNPRM. Horizon stated that the compliance time ''before further flight'' specified in paragraph (g)(2) of the SNPRM would immediately ground aircraft.

We agree with Horizon's request. We have revised the compliance time in paragraph (g)(2) of this final rule to ''200 flight hours or 2 months, whichever occurs first after the effective date of this AD'' for performing the operational check specified in that paragraph.

Explanation of Changes Made to This AD

We have revised paragraph (h) of this final rule to specify that installing replacement RFTUs having conformal bushings terminates the repetitive lubrication requirements of paragraph

(g)(2)(ii) of this final rule for the affected RTFU.

Conclusion

We reviewed the available data, including the comment received, and determined that air safety and the public interest require adopting this AD with the changes described previously. We have determined that these changes:

- Are consistent with the intent that was proposed in the SNPRM (78 FR 15655, March 12, 2013) for correcting the unsafe condition; and
- Do not add any additional burden upon the public than was already proposed in the SNPRM (78 FR 15655, March 12, 2013).

Costs of Compliance

We estimate that this AD affects 83 airplanes of U.S. registry.

We estimate the following costs to comply with this AD:

ESTIMATED COSTS

Action	Labor cost	Parts cost	Cost per product	Cost on U.S. operators
Inspection, Replacement, Lubrication.	5 work-hours × $85 per hour = $425 per inspection, replacement, and lubrication cycle.	$0	$425 per inspection, replacement, and lubrication cycle.	$35,275 inspection, replacement, and lubrication cycle.

We estimate the following costs to do any necessary replacements that would be required based on the results of the inspection. We have no way of determining the number of aircraft that might need these replacements:

ON-CONDITION COSTS

Action	Labor cost	Parts cost	Cost per product
Replacement	17 work-hours × $85 per hour = $1,445	$0	$1,445

Where the service information lists required parts costs that are covered under warranty, we have assumed that there will be no charge for these parts. As we do not control warranty coverage for affected parties, some parties may incur costs higher than estimated here.

Authority for This Rulemaking

Title 49 of the United States Code specifies the FAA's authority to issue rules on aviation safety. Subtitle I, section 106, describes the authority of the FAA Administrator. ''Subtitle VII: Aviation Programs,'' describes in more detail the scope of the Agency's authority.

We are issuing this rulemaking under the authority described in ''Subtitle VII, Part A, Subpart III, Section 44701: General requirements.'' Under that section, Congress charges the FAA with promoting safe flight of civil aircraft in air commerce by prescribing regulations for practices, methods, and procedures the Administrator finds necessary for safety in air commerce. This regulation is within the scope of that authority because it addresses an unsafe condition that is likely to exist or develop on products identified in this rulemaking action.

Regulatory Findings

We determined that this AD will not have federalism implications under Executive Order 13132. This AD will not have a substantial direct effect on the States, on the relationship between the national government and the States, or on the distribution of power and responsibilities among the various levels of government.

For the reasons discussed above, I certify that this AD:

1. Is not a ''significant regulatory action'' under Executive Order 12866;

2. Is not a ''significant rule'' under the DOT Regulatory Policies and Procedures (44 FR 11034, February 26, 1979);

3. Will not affect intrastate aviation in Alaska; and

4. Will not have a significant economic impact, positive or negative, on a substantial number of small entities under the criteria of the Regulatory Flexibility Act.

We prepared a regulatory evaluation of the estimated costs to comply with this AD and placed it in the AD docket.

Examining the AD Docket

You may examine the AD docket on the Internet at *http://www.regulations.gov/#!docketDetail;D=FAA-2012-0594;* or in person at the Docket Operations office between 9 a.m. and 5 p.m., Monday through Friday, except Federal holidays. The AD docket contains this AD, the MCAI, the regulatory evaluation, any comments received, and other information. The street address for the Docket Operations office (telephone (800) 647–5527) is in the **ADDRESSES** section.

List of Subjects in 14 CFR Part 39

Air transportation, Aircraft, Aviation safety, Incorporation by reference, Safety.

Adoption of the Amendment

Accordingly, under the authority delegated to me by the Administrator, the FAA amends 14 CFR part 39 as follows:

PART 39—AIRWORTHINESS DIRECTIVES

■ 1. The authority citation for part 39 continues to read as follows:

Authority: 49 U.S.C. 106(g), 40113, 44701.

§ 39.13 [Amended]

■ 2. The FAA amends § 39.13 by adding the following new AD:

2013–22–09 Bombardier, Inc.: Amendment 39–17641. Docket No. FAA–2012–0594; Directorate Identifier 2012–NM–019–AD.

(a) Effective Date

This airworthiness directive (AD) becomes effective December 5, 2013.

(b) Affected ADs

None.

(c) Applicability

This AD applies to Bombardier, Inc. Model DHC–8–400, –401, and –402 airplanes, certificated in any category, serial numbers (S/N) 4001, 4003 and subsequent, equipped with rudder feel trim unit (RFTU) part number (P/N) 399500–1007.

(d) Subject

Air Transport Association (ATA) of America Code 27: Flight Controls.

(e) Reason

This AD was prompted by reports of movement of the rudder pedals being impeded due to corrosion of the trunnion shaft of the RFTU. We are issuing this AD to detect and correct any sign of rough movement or seizure of the trunnion shaft and its bushing, which could cause a rudder control jam or a large and rapid alternating rudder input leading to a structural failure of the vertical fin.

(f) Compliance

You are responsible for having the actions required by this AD performed within the compliance times specified, unless the actions have already been done.

(g) Inspection, Replacement, and Lubrication

Within 200 flight hours or two months after the effective date of this AD, whichever occurs first: Inspect the RTFU to determine whether the serial number is in the range from S/N 0008 through 0509 inclusive without a suffix 'B,' in accordance with the Accomplishment Instructions of Bombardier Service Bulletin 84–27–60, dated July 12, 2012. A review of airplane maintenance records is acceptable in lieu of this inspection if the serial number of the RFTU can be conclusively determined from that review.

(1) If the RFTU's serial number is not in the range from S/N 0008 through 0509 inclusive, or if the serial number has a suffix 'B,' no further action is required for this paragraph.

(2) If the RFTU's serial number is in the range from S/N 0008 through 0509 inclusive, including those with a suffix 'A,' but not including those with suffix 'B': Within 200 flight hours or 2 months, whichever occurs first after the effective date of this AD, perform an operational check of the RFTU for any sign of rough movement or seizure of the trunnion or center shaft, in accordance with the Accomplishment Instructions of Bombardier Service Bulletin 84–27–60, dated July 12, 2012.

(i) If rough movement or seizure of the RFTU trunnion or center shaft is found: Before further flight, replace the RFTU with a new or serviceable RFTU, in accordance with the Accomplishment Instructions of Bombardier Service Bulletin 84–27–60, dated July 12, 2012.

(ii) If no rough movement or seizure of the RFTU trunnion or center shaft is found: Before further flight, lubricate the RFTU, in accordance with the Accomplishment Instructions of Bombardier Service Bulletin 84–27–60, dated July 12, 2012. Repeat the lubrication of the RFTU at intervals not to exceed 600 flight hours or 3 months, whichever occurs first, until the RFTU is replaced with a unit that has a serial number outside the affected range or a serial number with a suffix 'B.'

(h) Replacement

For airplanes having an RFTU identified in paragraph (g)(2) of this AD: Except as required by paragraph (g)(2)(i) of this AD, within 5,000 flight hours or 3 years after the effective date of this AD, whichever occurs first, replace all affected RFTUs with units that have a serial number outside the range from S/Ns 0008 through 0509 inclusive, or that have a serial number with a suffix 'B,' in accordance with the Accomplishment Instructions of Bombardier Service Bulletin 84–27–60, dated July 12, 2012. Installing replacement RFTUs having conformal bushings terminates the repetitive lubrication requirements of paragraph (g)(2)(ii) of this AD for the affected RTFU.

(i) Parts Installation Limitation

As of the effective date of this AD, no person may install an RFTU P/N 399500–1007 with a serial number from S/N 0008 through 0509 inclusive, including serial numbers with suffix 'A,' on any airplane, except that RFTUs having a serial number with suffix 'B' may be installed.

(j) Other FAA AD Provisions

The following provisions also apply to this AD:

(1) *Alternative Methods of Compliance (AMOCs):* The Manager, New York Aircraft Certification Office (ACO), ANE–170, FAA, has the authority to approve AMOCs for this AD, if requested using the procedures found in 14 CFR 39.19. In accordance with 14 CFR 39.19, send your request to your principal inspector or local Flight Standards District Office, as appropriate. If sending information directly to the ACO, send it to ATTN: Program Manager, Continuing Operational Safety, FAA, New York ACO, 1600 Stewart Avenue, Suite 410, Westbury, New York 11590; telephone 516–228–7300; fax 516–794–5531. Before using any approved AMOC, notify your appropriate principal inspector, or lacking a principal inspector, the manager of the local flight standards district office/certificate holding district office. The AMOC approval letter must specifically reference this AD.

(2) *Airworthy Product:* For any requirement in this AD to obtain corrective actions from a manufacturer or other source, use these actions if they are FAA-approved. Corrective actions are considered FAA-approved if they are approved by the State of Design Authority (or their delegated agent). You are required to assure the product is airworthy before it is returned to service.

(k) Related Information

Refer to MCAI Canadian Airworthiness Directive CF–2012–02R1, dated October 12, 2012, for related information, which can be found in the AD docket on the Internet at *http://www.regulations.gov/#!documentDetail;D=FAA-2012-0594-0006.*

(l) Material Incorporated by Reference

(1) The Director of the **Federal Register** approved the incorporation by reference (IBR) of the service information listed in this paragraph under 5 U.S.C. 552(a) and 1 CFR part 51.

(2) You must use this service information as applicable to do the actions required by this AD, unless the AD specifies otherwise.

(i) Bombardier Service Bulletin 84–27–60, dated July 12, 2012.

(ii) Reserved.

(3) For service information identified in this AD, contact Bombardier, Inc., Q-Series Technical Help Desk, 123 Garratt Boulevard, Toronto, Ontario M3K 1Y5, Canada; telephone 416–375–4000; fax 416–375–4539; email *thd.qseries@aero.bombardier.com;* Internet *http://www.bombardier.com.*

(4) You may review copies of the service information at the FAA, Transport Airplane Directorate, 1601 Lind Avenue SW., Renton, WA. For information on the availability of this material at the FAA, call 425–227–1221.

(5) You may view this service information that is incorporated by reference at the National Archives and Records Administration (NARA). For information on the availability of this material at NARA, call 202–741–6030, or go to: *http://www.archives.gov/federal-register/cfr/ibr-locations.html.*

Issued in Renton, Washington, on October 18, 2013.

Jeffrey E. Duven,

Acting Manager, Transport Airplane Directorate, Aircraft Certification Service.

[FR Doc. 2013–25629 Filed 10–30–13; 8:45 am]

BILLING CODE 4910–13–P

DEPARTMENT OF TRANSPORTATION

Federal Aviation Administration

14 CFR Part 39

[Docket No. FAA–2013–0490; Directorate Identifier 2008–SW–004–AD; Amendment 39–17611; AD 2013–20–05]

RIN 2120–AA64

Airworthiness Directives; Bell Helicopter Textron Canada Limited (Bell) Helicopters

AGENCY: Federal Aviation Administration (FAA), DOT.

ACTION: Final rule.

SUMMARY: We are adopting a new airworthiness directive (AD) for certain Bell Model 407 helicopters. This AD requires installing a placard beneath the NR/NP dual tachometer and revising the limitations section of the rotorcraft flight manual (RFM). This AD was prompted by several incidents of third stage engine turbine wheel failures, which were caused by excessive vibrations at certain engine speeds during steady-state operations. These actions are intended to alert pilots to avoid certain engine speeds during steady-state operations, prevent failure of the third stage engine turbine, engine power loss, and subsequent loss of control of the helicopter.

DATES: This AD is effective December 5, 2013.

The Director of the Federal Register approved the incorporation by reference

of a certain document listed in this AD as of December 5, 2013.

ADDRESSES: For service information identified in this AD, contact Bell Helicopter Textron Canada Limited, 12,800 Rue de l'Avenir, Mirabel, Quebec J7J1R4; telephone (450) 437–2862 or (800) 363–8023; fax (450) 433–0272; or at *http://www.bellcustomer.com/files/*. You may review the referenced service information at the FAA, Office of the Regional Counsel, Southwest Region, 2601 Meacham Blvd., Room 663, Fort Worth, Texas 76137.

Examining the AD Docket

You may examine the AD docket on the Internet at *http://www.regulations.gov* or in person at the Docket Operations Office between 9 a.m. and 5 p.m., Monday through Friday, except Federal holidays. The AD docket contains this AD, the foreign authority's AD, any incorporated-by-reference service information, the economic evaluation, any comments received, and other information. The street address for the Docket Operations Office (phone: 800–647–5527) is U.S. Department of Transportation, Docket Operations Office, M–30, West Building Ground Floor, Room W12–140, 1200 New Jersey Avenue SE., Washington, DC 20590.

FOR FURTHER INFORMATION CONTACT: Chinh Vuong, Aviation Safety Engineer, Safety Management Group, Rotorcraft Directorate, FAA, 2601 Meacham Blvd., Fort Worth, Texas 76137; telephone (817) 222–5110; email *chinh.vuong@faa.gov*.

SUPPLEMENTARY INFORMATION:

Discussion

On June 7, 2013, at 78 FR 34286, the Federal Register published our notice of proposed rulemaking (NPRM), which proposed to amend 14 CFR part 39 by adding an AD that would apply to Bell Model 407 helicopters, serial numbers 53000 through 53644. The NPRM proposed to require installing a placard on the instrument panel below the NR/NP dual tachometer and revising the Operating Limitations section of the Model 407 RFM to limit steady-state operation between speeds of 68.4% to 87.1%. The proposed requirements were intended to alert pilots to avoid certain engine speeds during steady-state operations, prevent failure of the third stage engine turbine, engine power loss, and subsequent loss of control of the helicopter.

The NPRM was prompted by AD No. CF–2004–09R1, dated July 4, 2005, issued by Transport Canada Civil Aviation (TCCA), which is the aviation authority for Canada. TCCA issued AD No. CF–2004–09R1 to correct an unsafe condition for Model 407 helicopters. TCCA advises that several failures of third stage turbine wheels used in Rolls Royce 250–C30S and 250–C47B engines, and three of these failures have occurred to the 250–C47B engine used by Bell on the Model 407. According to TCCA, Rolls Royce has determined that detrimental vibrations can occur within a particular range of turbine speeds, and may be a contributing factor to these failures. Bell has revised the operating limitations of the RFM and provided a corresponding decal on the instrument panel to inform pilots to avoid steady-state operations between 68.4% and 87.1% turbine speeds.

The TCCA AD requires amending the RFM, advising pilots of the change, and installing a decal as described in Bell Alert Service Bulletin (ASB) No. 407–05–67, dated June 8, 2005 (ASB 407–05–67).

Comments

After our NPRM (78 FR 34286, June 7, 2013) was published, we received comments from one commenter.

Request

Rolls-Royce Corporation requested that in addition to requiring the placard on the instrument panel, we allow operators the option to temporarily mark the N_r/N_p gauge with colored tape, to provide a more visual aide to the pilot for the speed avoidance zone.

We disagree. Marking the glass surface of the gauge can create parallax issues when viewing the avoidance ranges on the gauge, resulting in erroneous readings.

FAA's Determination

These helicopters have been approved by the aviation authority of Canada and are approved for operation in the United States. Pursuant to our bilateral agreement with Canada, TCCA, its technical representative, has notified us of the unsafe condition described in the TCCA AD. We are issuing this AD because we evaluated all information provided by TCCA, reviewed the relevant information, considered the comment received, and determined the unsafe condition exists and is likely to exist or develop on other helicopters of the same type design and that air safety and the public interest require adopting the AD requirements as proposed.

Differences Between This AD and the TCCA AD

The TCCA AD requires compliance within 10 calendar days, while this AD requires compliance within 30 days.

Related Service Information

Bell has issued ASB 407–05–67, which contains procedures for installing a placard on the instrument panel below the main rotor RPM (Nr)/power turbine RPM (Np) dual tachometer and for inserting the RFM changes into the flight manual.

Costs of Compliance

We estimate that this AD will affect 472 helicopters of U.S. Registry. Based on an average labor rate of $85 per hour, we estimate that operators may incur the following costs in order to comply with this AD. Amending the RFM will require about 0.5 work-hour, for a cost per helicopter of about $43 and a cost to U.S. operators of $20,296. Installing the decal will require about 0.2 work-hour and required parts cost $20, for a cost per helicopter of $37 and a cost to U.S. operators of $17,464. Based on these estimates, the total cost of this AD will be $80 per helicopter and $37,760 for the U.S. operator fleet.

Authority for This Rulemaking

Title 49 of the United States Code specifies the FAA's authority to issue rules on aviation safety. Subtitle I, section 106, describes the authority of the FAA Administrator. Subtitle VII: Aviation Programs, describes in more detail the scope of the Agency's authority.

We are issuing this rulemaking under the authority described in Subtitle VII, Part A, Subpart III, Section 44701: ''General requirements.'' Under that section, Congress charges the FAA with promoting safe flight of civil aircraft in air commerce by prescribing regulations for practices, methods, and procedures the Administrator finds necessary for safety in air commerce. This regulation is within the scope of that authority because it addresses an unsafe condition that is likely to exist or develop on helicopters identified in this rulemaking action.

Regulatory Findings

This AD will not have federalism implications under Executive Order 13132. This AD will not have a substantial direct effect on the States, on the relationship between the national government and the States, or on the distribution of power and responsibilities among the various levels of government.

For the reasons discussed above, I certify that this AD:

(1) Is not a ''significant regulatory action'' under Executive Order 12866;

(2) Is not a ''significant rule'' under DOT Regulatory Policies and Procedures (44 FR 11034, February 26, 1979);

(3) Will not affect intrastate aviation in Alaska to the extent that it justifies making a regulatory distinction; and

(4) Will not have a significant economic impact, positive or negative, on a substantial number of small entities under the criteria of the Regulatory Flexibility Act.

We prepared an economic evaluation of the estimated costs to comply with this AD and placed it in the AD docket.

List of Subjects in 14 CFR Part 39

Air transportation, Aircraft, Aviation safety, Incorporation by reference, Safety.

Adoption of the Amendment

Accordingly, under the authority delegated to me by the Administrator, the FAA amends 14 CFR part 39 as follows:

PART 39—AIRWORTHINESS DIRECTIVES

■ 1. The authority citation for part 39 continues to read as follows:

Authority: 49 U.S.C. 106(g), 40113, 44701.

§ 39.13 [Amended]

■ 2. The FAA amends § 39.13 by adding the following new airworthiness directive (AD):

2013–20–05 Bell Helicopter Textron Canada Limited (Bell): Amendment 39–17611; Docket No. FAA–2013–0490; Directorate Identifier 2008–SW–004–AD.

(a) Applicability

This AD applies to Bell Model 407 helicopters, serial numbers 53000 through 53644, certificated in any category.

(b) Unsafe Condition

This AD defines the unsafe condition as a third stage turbine vibration, which could result in turbine failure, engine power loss, and subsequent loss of control of the helicopter.

(c) Effective Date

This AD becomes effective December 5, 2013.

(d) Compliance

You are responsible for performing each action required by this AD within the specified compliance time unless it has already been accomplished prior to that time.

(e) Required Actions

Within 30 days:

(1) Revise the Operating Limitations section of the Model 407 Rotorcraft Flight Manual by inserting Section 1, Limitations, pages 1–6 and 1–14, of Bell BHT–407–FM–1, revision 3, dated April 26, 2005.

(2) Remove placard part number (P/N) 230–075–213–105, if installed.

(3) Install placard P/N 230–075–213–111, or equivalent, directly below the NR/NP dual tachometer.

(f) Alternative Methods of Compliance (AMOCs)

(1) The Manager, Safety Management Group, FAA, may approve AMOCs for this AD. Send your proposal to: Chinh Vuong, Aviation Safety Engineer, Safety Management Group, Rotorcraft Directorate, FAA, 2601 Meacham Blvd., Fort Worth, Texas 76137; telephone (817) 222–5110; email *chinh.vuong@faa.gov*.

(2) For operations conducted under a 14 CFR part 119 operating certificate or under 14 CFR part 91, subpart K, we suggest that you notify your principal inspector, or lacking a principal inspector, the manager of the local flight standards district office or certificate holding district office, before operating any aircraft complying with this AD through an AMOC.

(g) Additional Information

(1) Bell Alert Service Bulletin No. 407–05–67, dated June 8, 2005, which is not incorporated by reference, contains additional information about the subject of this AD. For service information identified in this AD, contact Bell Helicopter Textron Canada Limited, 12,800 Rue de l'Avenir, Mirabel, Quebec J7J1R4; telephone (450) 437–2862 or (800) 363–8023; fax (450) 433–0272; or at *http://www.bellcustomer.com/files/*. You may review a copy of the service information at the FAA, Office of the Regional Counsel, Southwest Region, 2601 Meacham Blvd., Room 663, Fort Worth, Texas 76137.

(2) The subject of this AD is addressed in Transport Canada Civil Aviation (TCCA) AD No. CF–2004–09R1, dated July 4, 2005. You may view the TCCA AD on the internet in the AD Docket at *http://www.regulations.gov*.

(h) Subject

Joint Aircraft Service Component (JASC) Code: 7250: Turbine Section.

(i) Material Incorporated by Reference

(1) The Director of the Federal Register approved the incorporation by reference (IBR) of the service information listed in this paragraph under 5 U.S.C. 552(a) and 1 CFR part 51.

(2) You must use this service information as applicable to do the actions required by this AD, unless the AD specifies otherwise.

(i) Pages 1–6 and 1–14 of Section 1, Limitations, of Bell Rotorcraft Flight Manual BHT–407–FM–1, Revision 3, dated April 26, 2005.

(ii) Reserved.

(3) For Bell service information identified in this AD, contact Bell Helicopter Textron Canada Limited, 12,800 Rue de l'Avenir, Mirabel, Quebec J7J1R4; telephone (450) 437–2862 or (800) 363–8023; fax (450) 433–0272; or at *http://www.bellcustomer.com/files/*.

(4) You may view this service information at FAA, Office of the Regional Counsel, Southwest Region, 2601 Meacham Blvd., Room 663, Fort Worth, Texas 76137. For information on the availability of this material at the FAA, call (817) 222–5110.

(5) You may view this service information that is incorporated by reference at the National Archives and Records Administration (NARA). For information on the availability of this material at NARA, call (202) 741–6030, or go to: *http://www.archives.gov/federal-register/cfr/ibr-locations.html*.

Issued in Fort Worth, Texas, on September 20, 2013.

Scott A. Horn,

Acting Directorate Manager, Rotorcraft Directorate, Aircraft Certification Service.

[FR Doc. 2013–24030 Filed 10–30–13; 8:45 am]

BILLING CODE 4910–13–P

DEPARTMENT OF TRANSPORTATION

Federal Aviation Administration

14 CFR Part 39

[Docket No. FAA–2013–0492; Directorate Identifier 2008–SW–013–AD; Amendment 39–17608; AD 2013–20–02]

RIN 2120–AA64

Airworthiness Directives; Bell Helicopter Textron Canada Limited (Bell) Helicopters

AGENCY: Federal Aviation Administration (FAA), DOT.

ACTION: Final rule.

SUMMARY: We are adopting a new airworthiness directive (AD) for Bell Model 230 helicopters. This AD requires installing a placard on the instrument panel and revising the limitations section of the rotorcraft flight manual (RFM). This AD was prompted by several incidents of third stage engine turbine wheel failures, which were caused by excessive vibrations at certain engine speeds during steady-state operations. These actions are intended to alert pilots to avoid certain engine speeds during steady-state operations, prevent failure of the third stage engine turbine, engine power loss, and subsequent loss of control of the helicopter.

DATES: This AD is effective December 5, 2013.

The Director of the Federal Register approved the incorporation by reference of a certain document listed in this AD as of December 5, 2013.

ADDRESSES: For service information identified in this AD, contact Bell Helicopter Textron Canada Limited, 12,800 Rue de l'Avenir, Mirabel, Quebec J7J1R4; telephone (450) 437–2862 or (800) 363–8023; fax (450) 433–0272; or at *http://www.bellcustomer.com/files/*. You may review the referenced service information at the FAA, Office of the Regional Counsel, Southwest Region, 2601 Meacham Blvd., Room 663, Fort Worth, Texas 76137.

Examining the AD Docket

You may examine the AD docket on the Internet at *http://www.regulations.gov* or in person at the Docket Operations Office between 9 a.m. and 5 p.m., Monday through Friday, except Federal holidays. The AD docket contains this AD, the foreign authority's AD, any incorporated-by-reference service information, the economic evaluation, any comments received, and other information. The street address for the Docket Operations Office (phone: 800–647–5527) is U.S. Department of Transportation, Docket Operations Office, M–30, West Building Ground Floor, Room W12–140, 1200 New Jersey Avenue SE., Washington, DC 20590.

FOR FURTHER INFORMATION CONTACT: Chinh Vuong, Aviation Safety Engineer, Safety Management Group, Rotorcraft Directorate, FAA, 2601 Meacham Blvd., Fort Worth, Texas 76137; telephone (817) 222–5110; email *chinh.vuong@faa.gov.*

SUPPLEMENTARY INFORMATION:

Discussion

On June 7, 2013, at 78 FR 34279, the **Federal Register** published our notice of proposed rulemaking (NPRM), which proposed to amend 14 CFR part 39 by adding an AD that would apply to Bell Model 230 helicopters. The NPRM proposed to require installing a placard on the instrument panel and revising the Operating Limitations section of the Model 230 RFM to limit steady-state operation between speeds of 71% and 92%. The proposed requirements were intended to alert pilots to avoid certain engine speeds during steady-state operations, prevent failure of the third stage engine turbine, engine power loss, and subsequent loss of control of the helicopter.

The NPRM was prompted by AD No. CF–2005–24, dated July 4, 2005, issued by Transport Canada Civil Aviation (TCCA), which is the aviation authority for Canada. TCCA issued AD CF–2005–24 to correct an unsafe condition for Model 230 helicopters. TCCA advises of several failures of third stage turbine wheels used in Rolls Royce 250–C30S and 250–C47B engines and that three of these failures have occurred on the same engine used by Bell on Model 230 helicopters. According to TCCA, Rolls Royce has determined that detrimental vibrations can occur within a particular range of turbine speeds, and may be a contributing factor to these failures. Bell has revised the operating limitations of the RFM and provided a corresponding decal on the instrument panel to inform pilots to avoid steady-state operations between 71% and 92% turbine speeds.

The TCCA AD requires amending the RFM, advising pilots of the change, and installing a decal as described in Bell Alert Service Bulletin (ASB) No. 230–05–33, dated June 10, 2005 (ASB 230–05–33).

Comments

After our NPRM (78 FR 34279, June 7, 2013) was published, we received comments from one commenter.

Request

Rolls-Royce Corporation requested that in addition to requiring the placard on the instrument panel, we allow operators the option to temporarily mark the N_r/N_p gauge with colored tape, to provide a more visual aide to the pilot for the speed avoidance zone.

We disagree. Marking the glass surface of the gauge can create parallax issues when viewing the avoidance ranges on the gauge, resulting in erroneous readings.

FAA's Determination

These helicopters have been approved by the aviation authority of Canada and are approved for operation in the United States. Pursuant to our bilateral agreement with Canada, TCCA, its technical representative, has notified us of the unsafe condition described in the TCCA AD. We are issuing this AD because we evaluated all information provided by TCCA, reviewed the relevant information, considered the comment received, and determined the unsafe condition exists and is likely to exist or develop on other helicopters of the same type design and that air safety and the public interest require adopting the AD requirements as proposed.

Differences Between This AD and the TCCA AD

The TCCA AD requires compliance within 10 calendar days, while this AD requires compliance within 30 days.

Related Service Information

Bell has issued ASB 230–05–33, which contains procedures for installing a placard on the instrument panel and for inserting the RFM changes into the flight manual.

Costs of Compliance

We estimate that this AD will affect 12 helicopters of U.S. Registry. Based on an average labor rate of $85 per hour, we estimate that operators will incur the following costs in order to comply with this AD. Amending the RFM requires about 0.5 work-hour, for a cost per helicopter of about $43 and a cost to U.S. operators of $516. Installing the decal requires about 0.2 work-hour and required parts cost $20, for a cost per helicopter of $37 and a cost to U.S. operators of $444. Based on these estimates, the total cost of this AD will be $80 per helicopter and $960 for the U.S. operator fleet.

Authority for This Rulemaking

Title 49 of the United States Code specifies the FAA's authority to issue rules on aviation safety. Subtitle I, section 106, describes the authority of the FAA Administrator. Subtitle VII: Aviation Programs, describes in more detail the scope of the Agency's authority.

We are issuing this rulemaking under the authority described in Subtitle VII, Part A, Subpart III, Section 44701: ''General requirements.'' Under that section, Congress charges the FAA with promoting safe flight of civil aircraft in air commerce by prescribing regulations for practices, methods, and procedures the Administrator finds necessary for safety in air commerce. This regulation is within the scope of that authority because it addresses an unsafe condition that is likely to exist or develop on helicopters identified in this rulemaking action.

Regulatory Findings

This AD will not have federalism implications under Executive Order 13132. This AD will not have a substantial direct effect on the States, on the relationship between the national government and the States, or on the distribution of power and responsibilities among the various levels of government.

For the reasons discussed above, I certify that this AD:

(1) Is not a ''significant regulatory action'' under Executive Order 12866;

(2) Is not a ''significant rule'' under DOT Regulatory Policies and Procedures (44 FR 11034, February 26, 1979);

(3) Will not affect intrastate aviation in Alaska to the extent that it justifies making a regulatory distinction; and

(4) Will not have a significant economic impact, positive or negative, on a substantial number of small entities under the criteria of the Regulatory Flexibility Act.

We prepared an economic evaluation of the estimated costs to comply with this AD and placed it in the AD docket.

List of Subjects in 14 CFR Part 39

Air transportation, Aircraft, Aviation safety, Incorporation by reference, Safety.

Adoption of the Amendment

Accordingly, under the authority delegated to me by the Administrator, the FAA amends 14 CFR part 39 as follows:

PART 39—AIRWORTHINESS DIRECTIVES

■ 1. The authority citation for part 39 continues to read as follows:

Authority: 49 U.S.C. 106(g), 40113, 44701.

§ 39.13 [Amended]

■ 2. The FAA amends § 39.13 by adding the following new airworthiness directive (AD):

2013–20–02 Bell Helicopter Textron Canada Limited (Bell): Amendment 39–17608; Docket No. FAA–2013–0492; Directorate Identifier 2008–SW–013–AD.

(a) Applicability

This AD applies to Bell Model 230 helicopters, certificated in any category.

(b) Unsafe Condition

This AD defines the unsafe condition as a third stage turbine vibration, which could result in turbine failure, engine power loss, and subsequent loss of control of the helicopter.

(c) Effective Date

This AD becomes effective December 5, 2013.

(d) Compliance

You are responsible for performing each action required by this AD within the specified compliance time unless it has already been accomplished prior to that time.

(e) Required Actions

Within 30 days:

(1) Revise the Operating Limitations section of the Model 230 Rotorcraft Flight Manual by inserting Section 1, Limitations, page 1–12, of Bell BHT–230–FM–1, revision 5, dated May 6, 2005.

(2) Install placard part number 230–075–213–115, or equivalent, on the instrument panel directly below the No. 1 and No. 2 engine oil temp/press indicator.

(f) Alternative Methods of Compliance (AMOCs)

(1) The Manager, Safety Management Group, FAA, may approve AMOCs for this AD. Send your proposal to: Chinh Vuong, Aviation Safety Engineer, Safety Management Group, Rotorcraft Directorate, FAA, 2601 Meacham Blvd., Fort Worth, Texas 76137; telephone (817) 222–5110; email *chinh.vuong@faa.gov.*

(2) For operations conducted under a 14 CFR part 119 operating certificate or under 14 CFR part 91, subpart K, we suggest that you notify your principal inspector, or lacking a principal inspector, the manager of the local flight standards district office or certificate holding district office, before operating any aircraft complying with this AD through an AMOC.

(g) Additional Information

(1) Bell Alert Service Bulletin No. 230–05–33, dated June 10, 2005, which is not incorporated by reference, contains additional information about the subject of this AD. For service information identified in this AD, contact Bell Helicopter Textron Canada Limited, 12,800 Rue de l'Avenir, Mirabel, Quebec J7J1R4; telephone (450) 437–2862 or (800) 363–8023; fax (450) 433–0272; or at *http://www.bellcustomer.com/files/.* You may review a copy of the service information at the FAA, Office of the Regional Counsel, Southwest Region, 2601 Meacham Blvd., Room 663, Fort Worth, Texas 76137.

(2) The subject of this AD is addressed in Transport Canada Civil Aviation (TCCA) AD No. CF–2005–24, dated July 4, 2005. You may view the TCCA AD on the internet in the AD Docket at *http://www.regulations.gov.*

(h) Subject

Joint Aircraft Service Component (JASC) Code: 7250: Turbine Section.

(i) Material Incorporated by Reference

(1) The Director of the Federal Register approved the incorporation by reference (IBR) of the service information listed in this paragraph under 5 U.S.C. 552(a) and 1 CFR part 51.

(2) You must use this service information as applicable to do the actions required by this AD, unless the AD specifies otherwise.

(i) Page 1–12 of Section 1, Limitations, of Bell Rotorcraft Flight Manual BHT–230–FM–1, Revision 5, dated May 6, 2005.

(ii) Reserved.

(3) For Bell service information identified in this AD, contact Bell Helicopter Textron Canada Limited, 12,800 Rue de l'Avenir, Mirabel, Quebec J7J1R4; telephone (450) 437–2862 or (800) 363–8023; fax (450) 433–0272; or at *http://www.bellcustomer.com/files/.*

(4) You may view this service information at FAA, Office of the Regional Counsel, Southwest Region, 2601 Meacham Blvd., Room 663, Fort Worth, Texas 76137. For information on the availability of this material at the FAA, call (817) 222–5110.

(5) You may view this service information that is incorporated by reference at the National Archives and Records Administration (NARA). For information on the availability of this material at NARA, call (202) 741–6030, or go to: *http://www.archives.gov/federal-register/cfr/ibr-locations.html.*

Issued in Fort Worth, Texas, on September 19, 2013.

Scott A. Horn,

Acting Directorate Manager, Rotorcraft Directorate, Aircraft Certification Service.

[FR Doc. 2013–24032 Filed 10–30–13; 8:45 am]

BILLING CODE 4910–13–P

DEPARTMENT OF TRANSPORTATION

Federal Aviation Administration

14 CFR Part 39

[Docket No. FAA–2013–0631; Directorate Identifier 2012–NM–142–AD; Amendment 39–17640; AD 2013–22–08]

RIN 2120–AA64

Airworthiness Directives; BAE Systems (Operations) Limited Airplanes

AGENCY: Federal Aviation Administration (FAA), Department of Transportation (DOT).

ACTION: Final rule.

SUMMARY: We are adopting a new airworthiness directive (AD) for all BAE Systems (Operations) Limited Model BAe 146 and Avro 146–RJ series airplanes. This AD was prompted by a report of a cracked pick-up bracket of the forward outboard pylon of the number 1 engine due to stress corrosion. This AD requires repetitive inspections and, depending on findings, repair of the pylon pick-up brackets. We are issuing this AD to detect and correct cracking of the pick-up bracket, which could result in the engine pylon separating from the wing, with consequent damage to the airplane and reduced controllability.

DATES: This AD becomes effective December 5, 2013.

The Director of the Federal Register approved the incorporation by reference of certain publications listed in this AD as of December 5, 2013.

ADDRESSES: You may examine the AD docket on the Internet at *http://www.regulations.gov/#!docketDetail;D=FAA-2013-0631;* or in person at the U.S. Department of Transportation, Docket Operations, M–30, West Building Ground Floor, Room W12–140, 1200 New Jersey Avenue SE., Washington, DC.

For service information identified in this AD, contact BAE Systems (Operations) Limited, Customer Information Department, Prestwick International Airport, Ayrshire, KA9 2RW, Scotland, United Kingdom; telephone +44 1292 675207; fax +44 1292 675704; email *RApublications@baesystems.com;* Internet *http://www.baesystems.com/Businesses/RegionalAircraft/index.htm.* You may view this referenced service information at the FAA, Transport Airplane Directorate, 1601 Lind Avenue SW., Renton, WA. For information on the availability of this material at the FAA, call 425–227–1221.

FOR FURTHER INFORMATION CONTACT: Todd Thompson, Aerospace Engineer, International Branch, ANM–116, Transport Airplane Directorate, FAA, 1601 Lind Avenue SW., Renton, WA 98057–3356; telephone: (425) 227–1175; fax (425) 227–1149.

SUPPLEMENTARY INFORMATION:

Discussion

We issued a notice of proposed rulemaking (NPRM) to amend 14 CFR part 39 by adding an AD that would apply to the specified products. The NPRM published in the **Federal Register** on July 31, 2013 (78 FR 46301). The NPRM proposed to correct an unsafe condition for the specified products.

The European Aviation Safety Agency (EASA), which is the Technical Agent for the Member States of the European Community, has issued EASA Airworthiness Directive 2012–0136, dated July 20, 2012 (referred to after this as the Mandatory Continuing Airworthiness Information, or ''the MCAI''), to correct an unsafe condition for the specified products. The MCAI states:

> While carrying out a scheduled environmental inspection, an operator found a cracked number 1 engine forward outboard pylon pick-up bracket. Cracks were present on the upper flange of the bracket running between all 3 attachment bolt holes. Subsequent investigation revealed that the cause of cracking was stress corrosion. Cracking of the pylon pick-up brackets at the top and bottom flanges could reduce the capability of the brackets to support the ultimate sideload, particularly if cracking is present on more than one flange.
>
> This condition, if not detected and corrected, could result in the engine pylon separation from the wing, likely resulting in damage to [and controllability of] the aeroplane and possible injury to persons on the ground.
>
> * * * * *
>
> For reasons described above, this [EASA] AD requires the inspection and, depending on findings, repair of the affected pylon pick-up brackets.

The inspection includes a special detailed inspection with a videoscope. Corrective actions can include replacing any affected pylon pick-up brackets, and doing any follow-on skin repairs. You may examine the MCAI in the AD docket on the Internet at *http://www.regulations.gov/#!documentDetail;D=FAA-2013-0631-0002.*

Comments

We gave the public the opportunity to participate in developing this AD. We received no comments on the NPRM (78 FR 46301, July 31, 2013) or on the determination of the cost to the public.

Conclusion

We reviewed the available data and determined that air safety and the public interest require adopting this AD as proposed—except for minor editorial changes. We have determined that these minor changes:

- Are consistent with the intent that was proposed in the NPRM (78 FR 46301, July 31, 2013) for correcting the unsafe condition; and
- Do not add any additional burden upon the public than was already proposed in the NPRM (78 FR 46301, July 31, 2013).

Costs of Compliance

Based on the service information, we estimate that this AD affects 1 product of U.S. registry. We also estimate that it takes 2 work-hours per product to comply with the basic requirements of this AD. The average labor rate is $85 per work-hour. Based on these figures, we estimate the cost of this AD on U.S. operators to be $170, or $170 per product.

We have received no definitive data that would enable us to provide cost estimates for the on-condition actions specified in this AD.

Authority for This Rulemaking

Title 49 of the United States Code specifies the FAA's authority to issue rules on aviation safety. Subtitle I, section 106, describes the authority of the FAA Administrator. ''Subtitle VII: Aviation Programs,'' describes in more detail the scope of the Agency's authority.

We are issuing this rulemaking under the authority described in ''Subtitle VII, Part A, Subpart III, Section 44701: General requirements.'' Under that section, Congress charges the FAA with promoting safe flight of civil aircraft in air commerce by prescribing regulations for practices, methods, and procedures the Administrator finds necessary for safety in air commerce. This regulation is within the scope of that authority because it addresses an unsafe condition that is likely to exist or develop on products identified in this rulemaking action.

Regulatory Findings

We determined that this AD will not have federalism implications under Executive Order 13132. This AD will not have a substantial direct effect on the States, on the relationship between the national government and the States, or on the distribution of power and responsibilities among the various levels of government.

For the reasons discussed above, I certify that this AD:

1. Is not a ''significant regulatory action'' under Executive Order 12866;
2. Is not a ''significant rule'' under the DOT Regulatory Policies and Procedures (44 FR 11034, February 26, 1979);
3. Will not affect intrastate aviation in Alaska; and
4. Will not have a significant economic impact, positive or negative, on a substantial number of small entities under the criteria of the Regulatory Flexibility Act.

We prepared a regulatory evaluation of the estimated costs to comply with this AD and placed it in the AD docket.

Examining the AD Docket

You may examine the MCAI in the AD docket on the Internet at *http://www.regulations.gov/#!documentDetail;D=FAA-2013-0631-0002;* or in person at the Docket Operations office between 9 a.m. and 5 p.m., Monday through Friday, except Federal holidays. The AD docket contains this AD, the MCAI, the regulatory evaluation, any comments received, and other information. The street address for the Docket Operations office (telephone (800) 647–5527) is in the **ADDRESSES** section.

List of Subjects in 14 CFR Part 39

Air transportation, Aircraft, Aviation safety, Incorporation by reference, Safety.

Adoption of the Amendment

Accordingly, under the authority delegated to me by the Administrator, the FAA amends 14 CFR part 39 as follows:

PART 39—AIRWORTHINESS DIRECTIVES

■ 1. The authority citation for part 39 continues to read as follows:

Authority: 49 U.S.C. 106(g), 40113, 44701.

§ 39.13 [Amended]

■ 2. The FAA amends § 39.13 by adding the following new AD:

2013–22–08 BAE Systems (Operations) Limited: Amendment 39–17640. Docket No. FAA–2013–0631; Directorate Identifier 2012–NM–142–AD.

(a) Effective Date

This airworthiness directive (AD) becomes effective December 5, 2013.

(b) Affected ADs

None.

(c) Applicability

This AD applies to BAE Systems (Operations) Limited Model BAe 146–100A, –200A, and –300A airplanes; and Model Avro 146–RJ70A, 146–RJ85A, and 146–RJ100A airplanes; certificated in any category, all serial numbers.

(d) Subject

Air Transport Association (ATA) of America Code 57, Wings.

(e) Reason

This AD was prompted by a report of a cracked pick-up bracket of the forward outboard pylon of the number 1 engine due to stress corrosion. We are issuing this AD to detect and correct cracking of the pick-up bracket, which could result in the engine pylon separating from the wing, with consequent damage to the airplane and reduced controllability.

(f) Compliance

You are responsible for having the actions required by this AD performed within the compliance times specified, unless the actions have already been done.

(g) Repetitive Inspections

(1) Within the initial compliance time specified in paragraphs (g)(1)(i) and (g)(1)(ii) of this AD, as applicable, and thereafter at intervals not to exceed 24 months: Do a special detailed inspection with a videoscope of the flanges of the Rib 10 forward pylon pick-up bracket of each engine pylon for cracking, corrosion, and other defects, in accordance with the Accomplishment Instructions of BAE Systems (Operations) Limited Inspection Service Bulletin ISB.57–073, Revision 1, dated January 27, 2012; or Revision 2, dated March 8, 2012.

(i) Within 6 months after the effective date of this AD, except as provided by paragraph (g)(1)(ii) of this AD.

(ii) For airplanes on which a maintenance records check positively determines that both forward pylon pick-up brackets have been replaced since first flight of the airplane: Within 20 months after the effective date of this AD.

(2) If, during any inspection required by paragraph (g)(1) of this AD, any cracking, corrosion or other defect of any Rib 10 forward pylon pick-up bracket is found: Before further flight, repair or replace the bracket as specified in paragraph (g)(2)(i) or (g)(2)(ii) of this AD.

(i) Repair a bracket in accordance with the Accomplishment Instructions of BAE Systems (Operations) Limited Inspection Service Bulletin ISB.57–073, Revision 1, dated January 27, 2012; or Revision 2, dated March 8, 2012.

(ii) Replace a bracket using a method approved by either the Manager, International Branch, ANM–116, Transport Airplane Directorate, FAA; or the European Aviation Safety Agency (EASA) (or its delegated agent).

(3) Repairing or replacing a Rib 10 forward pylon pick-up bracket, as required by paragraph (g)(2) of this AD, does not terminate the repetitive inspections required by paragraph (g)(1) of this AD.

(h) Credit for Previous Actions

This paragraph provides credit for actions required by paragraph (g) of this AD, if the actions were performed before the effective date of this AD using BAE Systems (Operations) Limited Inspection Service Bulletin ISB.57–073, dated September 6, 2010, which is not incorporated by reference in this AD.

(i) Other FAA AD Provisions

The following provisions also apply to this AD:

(1) *Alternative Methods of Compliance (AMOCs):* The Manager, International Branch, ANM–116, Transport Airplane Directorate, FAA, has the authority to approve AMOCs for this AD, if requested using the procedures found in 14 CFR 39.19. In accordance with 14 CFR 39.19, send your request to your principal inspector or local Flight Standards District Office, as appropriate. If sending information directly to the International Branch, send it to ATTN: Todd Thompson, Aerospace Engineer, International Branch, ANM–116, Transport Airplane Directorate, FAA, 1601 Lind Avenue SW., Renton, WA 98057–3356; telephone (425) 227–1175; fax (425) 227–1149. Information may be emailed to: *9-ANM-116-AMOC-REQUESTS@faa.gov.* Before using any approved AMOC, notify your appropriate principal inspector, or lacking a principal inspector, the manager of the local flight standards district office/certificate holding district office. The AMOC approval letter must specifically reference this AD.

(2) *Airworthy Product:* For any requirement in this AD to obtain corrective actions from a manufacturer or other source, use these actions if they are FAA-approved. Corrective actions are considered FAA-approved if they are approved by the State of Design Authority (or their delegated agent). You are required to assure the product is airworthy before it is returned to service.

(j) Related Information

(1) Refer to Mandatory Continuing Airworthiness Information (MCAI) European Aviation Safety Agency Airworthiness Directive 2012–0136, dated July 20, 2012, for related information. You may examine the MCAI in the AD docket on the Internet at *http://www.regulations.gov/#!documentDetail;D=FAA-2013-0631-0002.*

(2) Service information identified in this AD that is not incorporated by reference may be obtained at the addresses specified in paragraphs (k)(3) and (k)(4) of this AD.

(k) Material Incorporated by Reference

(1) The Director of the Federal Register approved the incorporation by reference (IBR) of the service information listed in this paragraph under 5 U.S.C. 552(a) and 1 CFR part 51.

(2) You must use this service information as applicable to do the actions required by this AD, unless this AD specifies otherwise.

(i) BAE Systems (Operations) Limited Inspection Service Bulletin ISB.57–073, Revision 1, dated January 27, 2012.

(ii) BAE Systems (Operations) Limited Inspection Service Bulletin ISB.57–073, Revision 2, dated March 8, 2012.

(3) For service information identified in this AD, contact BAE Systems (Operations) Limited, Customer Information Department, Prestwick International Airport, Ayrshire, KA9 2RW, Scotland, United Kingdom; telephone +44 1292 675207; fax +44 1292 675704; email *RApublications@baesystems.com;* Internet *http://www.baesystems.com/Businesses/RegionalAircraft/index.htm.*

(4) You may review copies of the service information at the FAA, Transport Airplane Directorate, 1601 Lind Avenue SW., Renton, WA. For information on the availability of this material at the FAA, call 425–227–1221.

(5) You may view this service information that is incorporated by reference at the National Archives and Records Administration (NARA). For information on the availability of this material at NARA, call 202–741–6030, or go to: *http://www.archives.gov/federal-register/cfr/ibr-locations.html.*

Issued in Renton, Washington, on October 17, 2013.

Jeffrey E. Duven,

Acting Manager, Transport Airplane Directorate, Aircraft Certification Service.

[FR Doc. 2013–25627 Filed 10–30–13; 8:45 am]

BILLING CODE 4910–13–P

DEPARTMENT OF TRANSPORTATION

Federal Aviation Administration

14 CFR Part 39

[Docket No. FAA–2013–0491; Directorate Identifier 2008–SW–012–AD; Amendment 39–17609; AD 2013–20–03]

RIN 2120–AA64

Airworthiness Directives; Bell Helicopter Textron Canada Limited (Bell) Helicopters

AGENCY: Federal Aviation Administration (FAA), DOT.

ACTION: Final rule.

SUMMARY: We are adopting a new airworthiness directive (AD) for certain Bell Model 430 helicopters. This AD requires installing a placard on the instrument panel and revising the limitations section of the rotorcraft flight manual (RFM). This AD was prompted by several incidents of third stage engine turbine wheel failures, which were caused by excessive vibrations at certain engine speeds during steady-state operations. These actions are intended to alert pilots to avoid certain engine speeds during steady-state operations, prevent failure of the third stage engine turbine, engine power loss, and subsequent loss of control of the helicopter.

DATES: This AD is effective December 5, 2013.

The Director of the Federal Register approved the incorporation by reference of a certain document listed in this AD as of December 5, 2013.

ADDRESSES: For service information identified in this AD, contact Bell Helicopter Textron Canada Limited, 12,800 Rue de l'Avenir, Mirabel, Quebec J7J1R4; telephone (450) 437–2862 or (800) 363–8023; fax (450) 433–0272; or at *http://www.bellcustomer.com/files/.* You may review the referenced service information at the FAA, Office of the Regional Counsel, Southwest Region, 2601 Meacham Blvd., Room 663, Fort Worth, Texas 76137.

Examining the AD Docket

You may examine the AD docket on the Internet at *http://www.regulations.gov* or in person at the Docket Operations Office between 9 a.m. and 5 p.m., Monday through Friday, except Federal holidays. The AD docket contains this AD, the foreign authority's AD, any incorporated-by-reference service information, the economic evaluation, any comments received, and other information. The street address for the Docket Operations Office (phone: 800–647–5527) is U.S. Department of Transportation, Docket Operations Office, M–30, West Building Ground Floor, Room W12–140, 1200 New Jersey Avenue SE., Washington, DC 20590.

FOR FURTHER INFORMATION CONTACT: Chinh Vuong, Aviation Safety Engineer, Safety Management Group, Rotorcraft Directorate, FAA, 2601 Meacham Blvd., Fort Worth, Texas 76137; telephone (817) 222–5110; email *chinh.vuong@faa.gov.*

SUPPLEMENTARY INFORMATION:

Discussion

On June 7, 2013, at 78 FR 34290, the **Federal Register** published our notice of proposed rulemaking (NPRM), which proposed to amend 14 CFR part 39 by adding an AD that would apply to Bell Model 430 helicopters, serial number 49001 through 49111. The NPRM proposed to require installing a placard on the instrument panel and revising the Operating Limitations section of the Model 430 RFM to limit steady-state operation between speeds of 71% and 91%. The proposed requirements were intended to alert pilots to avoid certain engine speeds during steady-state operations, prevent failure of the third stage engine turbine, engine power loss, and subsequent loss of control of the helicopter.

The NPRM was prompted by AD No. CF–2005–25, dated July 5, 2005, issued by Transport Canada Civil Aviation (TCCA), which is the aviation authority for Canada. TCCA issued AD No. CF–2005–25 to correct an unsafe condition for Model 430 helicopters. TCCA advises that several failures of third stage turbine wheels used in Rolls Royce 250–C30S and 250–C47B engines and that a similar turbine wheel is installed on the 250–C40B engine used by Bell on Model 430 helicopters. According to TCCA, Rolls Royce has determined that detrimental vibrations can occur within a particular range of turbine speeds, and may be a contributing factor to these failures. Bell has revised the operating limitations of the RFM and provided a corresponding decal on the instrument panel to inform pilots to avoid steady-state operations between 71% and 91% turbine speeds.

The TCCA AD requires amending the RFM, advising pilots of the change, and installing a decal as described in Bell Alert Service Bulletin (ASB) No. 430–05–34, dated June 10, 2005 (ASB 430–05–34).

Comments

After our NPRM (78 FR 34290, June 7, 2013) was published, we received comments from one commenter.

Request

Rolls-Royce Corporation requested that in addition to requiring the placard on the instrument panel, we allow operators the option to temporarily mark the N_r/N_p gauge with colored tape, to provide a more visual aide to the pilot for the speed avoidance zone.

We disagree. Marking the glass surface of the gauge can create parallax issues when viewing the avoidance ranges on the gauge, resulting in erroneous readings.

FAA's Determination

These helicopters have been approved by the aviation authority of Canada and are approved for operation in the United States. Pursuant to our bilateral agreement with Canada, TCCA, its technical representative, has notified us of the unsafe condition described in the TCCA AD. We are issuing this AD because we evaluated all information provided by TCCA, reviewed the relevant information, considered the comment received, and determined the unsafe condition exists and is likely to exist or develop on other helicopters of the same type design and that air safety and the public interest require adopting the AD requirements as proposed.

Differences Between This AD and the TCCA AD

The TCCA AD requires compliance within 10 calendar days, while this AD requires compliance within 30 days.

Related Service Information

Bell has issued ASB 430–05–34, which contains procedures for installing a placard on the instrument panel and for inserting the RFM changes into the flight manual.

Costs of Compliance

We estimate that this AD will affect 37 helicopters of U.S. Registry. Based on an average labor rate of $85 per hour, we estimate that operators will incur the following costs in order to comply with this AD. Amending the RFM requires about 0.5 work-hour, for a cost per helicopter of about $43 and a cost to U.S. operators of $1,591. Installing the decal requires about 0.2 work-hour and required parts cost $20, for a cost per helicopter of $37 and a cost to U.S. operators of $1,369. Based on these estimates, the total cost of this AD will be $80 per helicopter and $2,960 for the U.S. operator fleet.

Authority for This Rulemaking

Title 49 of the United States Code specifies the FAA's authority to issue rules on aviation safety. Subtitle I, section 106, describes the authority of the FAA Administrator. Subtitle VII: Aviation Programs, describes in more detail the scope of the Agency's authority.

We are issuing this rulemaking under the authority described in Subtitle VII, Part A, Subpart III, Section 44701: ''General requirements.'' Under that section, Congress charges the FAA with promoting safe flight of civil aircraft in air commerce by prescribing regulations for practices, methods, and procedures the Administrator finds necessary for safety in air commerce. This regulation is within the scope of that authority because it addresses an unsafe condition that is likely to exist or develop on helicopters identified in this rulemaking action.

Regulatory Findings

This AD will not have federalism implications under Executive Order 13132. This AD will not have a substantial direct effect on the States, on the relationship between the national government and the States, or on the distribution of power and responsibilities among the various levels of government.

For the reasons discussed above, I certify that this AD:

(1) Is not a ''significant regulatory action'' under Executive Order 12866;

(2) Is not a ''significant rule'' under DOT Regulatory Policies and Procedures (44 FR 11034, February 26, 1979);

(3) Will not affect intrastate aviation in Alaska to the extent that it justifies making a regulatory distinction; and

(4) Will not have a significant economic impact, positive or negative, on a substantial number of small entities under the criteria of the Regulatory Flexibility Act.

We prepared an economic evaluation of the estimated costs to comply with this AD and placed it in the AD docket.

List of Subjects in 14 CFR Part 39

Air transportation, Aircraft, Aviation safety, Incorporation by reference, Safety.

Adoption of the Amendment

Accordingly, under the authority delegated to me by the Administrator, the FAA amends 14 CFR part 39 as follows:

PART 39—AIRWORTHINESS DIRECTIVES

■ 1. The authority citation for part 39 continues to read as follows:

Authority: 49 U.S.C. 106(g), 40113, 44701.

§ 39.13 [Amended]

■ 2. The FAA amends § 39.13 by adding the following new airworthiness directive (AD):

2013–20–03 Bell Helicopter Textron Canada Limited (Bell): Amendment 39–17609; Docket No. FAA–2013–0491; Directorate Identifier 2008–SW–012–AD.

(a) Applicability

This AD applies to Bell Model 430 helicopters, serial number 49001 through 49111, certificated in any category.

(b) Unsafe Condition

This AD defines the unsafe condition as a third stage turbine vibration, which could result in turbine failure, engine power loss, and subsequent loss of control of the helicopter.

(c) Effective Date

This AD becomes effective December 5, 2013.

(d) Compliance

You are responsible for performing each action required by this AD within the specified compliance time unless it has already been accomplished prior to that time.

(e) Required Actions

Within 30 days:

(1) Revise the Operating Limitations section of the Model 430 Rotorcraft Flight Manual by inserting Section 1, Limitations, page 1–7, of Bell BHT–430–FM–1, revision 18, dated September 1, 2009.

(2) Install placard part number 230–075–213–113, or equivalent, on the instrument panel directly below the pilot audio select panel.

(f) Alternative Methods of Compliance (AMOCs)

(1) The Manager, Safety Management Group, FAA, may approve AMOCs for this AD. Send your proposal to: Chinh Vuong, Aviation Safety Engineer, Safety Management Group, Rotorcraft Directorate, FAA, 2601 Meacham Blvd., Fort Worth, Texas 76137; telephone (817) 222–5110; email *chinh.vuong@faa.gov.*

(2) For operations conducted under a 14 CFR part 119 operating certificate or under 14 CFR part 91, subpart K, we suggest that you notify your principal inspector, or lacking a principal inspector, the manager of the local flight standards district office or certificate holding district office, before operating any aircraft complying with this AD through an AMOC.

(g) Additional Information

(1) Bell Alert Service Bulletin No. 430–05–34, dated June 10, 2005, which is not incorporated by reference, contains additional information about the subject of this AD. For service information identified in this AD, contact Bell Helicopter Textron Canada Limited, 12,800 Rue de l'Avenir, Mirabel, Quebec J7J1R4; telephone (450) 437–2862 or (800) 363–8023; fax (450) 433–0272; or at *http://www.bellcustomer.com/files/.* You may review a copy of the service information at the FAA, Office of the Regional Counsel, Southwest Region, 2601 Meacham Blvd., Room 663, Fort Worth, Texas 76137.

(2) The subject of this AD is addressed in Transport Canada Civil Aviation (TCCA) AD No. CF–2005–25, dated July 5, 2005. You may view the TCCA AD on the internet in the AD Docket at *http://www.regulations.gov.*

(h) Subject

Joint Aircraft Service Component (JASC) Code: 7250: Turbine Section.

(i) Material Incorporated by Reference

(1) The Director of the Federal Register approved the incorporation by reference (IBR) of the service information listed in this paragraph under 5 U.S.C. 552(a) and 1 CFR part 51.

(2) You must use this service information as applicable to do the actions required by this AD, unless the AD specifies otherwise.

(i) Page 1–7 of Section 1, Limitations, of Bell Rotorcraft Flight Manual BHT–430–FM–1, revision 18, dated September 1, 2009.

(ii) Reserved.

(3) For Bell service information identified in this AD, contact Bell Helicopter Textron Canada Limited, 12,800 Rue de l'Avenir, Mirabel, Quebec J7J1R4; telephone (450) 437–2862 or (800) 363–8023; fax (450) 433–0272; or at *http://www.bellcustomer.com/files/.*

(4) You may view this service information at FAA, Office of the Regional Counsel, Southwest Region, 2601 Meacham Blvd., Room 663, Fort Worth, Texas 76137. For information on the availability of this material at the FAA, call (817) 222–5110.

(5) You may view this service information that is incorporated by reference at the National Archives and Records Administration (NARA). For information on the availability of this material at NARA, call (202) 741–6030, or go to: *http://www.archives.gov/federal-register/cfr/ibr-locations.html.*

Issued in Fort Worth, Texas, on September 18, 2013.

Scott A. Horn,

Acting Directorate Manager, Rotorcraft Directorate, Aircraft Certification Service.

[FR Doc. 2013–24035 Filed 10–30–13; 8:45 am]

BILLING CODE 4910–13–P

DEPARTMENT OF TRANSPORTATION

Federal Aviation Administration

14 CFR Part 71

[Docket No. FAA–2012–1174; Airspace Docket No. 12–AAL–12]

Modification of Class D and E Airspace; Kenai, AK

AGENCY: Federal Aviation Administration (FAA), DOT.

ACTION: Final rule.

SUMMARY: This action modifies Class D and E airspace at Kenai Municipal Airport, Kenai, AK. Controlled airspace is necessary to accommodate aircraft using the new Area Navigation (RNAV) Global Positioning System (GPS) standard instrument approach procedures at the airport. A minor adjustment is made to the geographic coordinates of the airport. Additionally, language establishing dates and times of use of the procedures was inadvertently omitted from the description for the Class E airspace designated as an extension, and is included in this rule. This action, initiated by the biennial review of the Kenai airspace area, enhances the safety and management of aircraft operations at the airport.

DATES: Effective date, 0901 UTC, February 6, 2014. The Director of the Federal Register approves this incorporation by reference action under 1 CFR Part 51, subject to the annual revision of FAA Order 7400.9 and publication of conforming amendments.

FOR FURTHER INFORMATION CONTACT: Richard Roberts, Federal Aviation Administration, Operations Support Group, Western Service Center, 1601 Lind Avenue SW., Renton, WA 98057; telephone (425) 203–4517.

SUPPLEMENTARY INFORMATION:

History

On June 10, 2013, the FAA published in the **Federal Register** a notice of

proposed rulemaking (NPRM) to modify controlled airspace at Kenai Municipal Airport, Kenai, AK (78 FR 34609). Interested parties were invited to participate in this rulemaking effort by submitting written comments on the proposal to the FAA. No comments were received. Subsequent to publication, the FAA found that the text regarding operating hours established by NOTAM was omitted from Class E airspace designated as an extension to a Class D surface area. This action includes the NOTAM information.

Class D and Class E airspace designations are published in paragraph 5000, 6002 and 6004, respectively, of FAA Order 7400.9X dated August 7, 2013, and effective September 15, 2013, which is incorporated by reference in 14 CFR 71.1. The Class D and Class E airspace designations listed in this document will be published subsequently in this Order.

The Rule

This action amends Title 14 Code of Federal Regulations (14 CFR) Part 71 by modifying Class D airspace, Class E surface airspace and Class E airspace designated as an extension to Class D surface area, at Kenai Municipal Airport, Kenai, AK. Also, the geographic coordinates of the airport are updated to coincide with the FAA's aeronautical database. The FAAs biennial review found modification of the airspace necessary for the safety and management of aircraft departing and arriving under IFR operations at the airport. The Class D airspace and Class E surface area airspace excluded below 1100 feet MSL beyond 4 miles from the airport is decreased, and the segment of the Class E airspace designated as an extension extending to 10.2 miles northeast of the airport is adjusted to coincide with the dimensions of the cutout. Also, this action adds the text specifying the operating hours established in advance by NOTAM in the airspace description for Class E airspace designated as an extension to Class D or E surface area.

The FAA has determined this regulation only involves an established body of technical regulations for which frequent and routine amendments are necessary to keep them operationally current. Therefore, this regulation: (1) Is not a ''significant regulatory action'' under Executive Order 12866; (2) is not a ''significant rule'' under DOT Regulatory Policies and Procedures (44 FR 11034; February 26, 1979); and (3) does not warrant preparation of a regulatory evaluation as the anticipated impact is so minimal. Since this is a routine matter that only affects air traffic procedures and air navigation, it is certified this rule, when promulgated, does not have a significant economic impact on a substantial number of small entities under the criteria of the Regulatory Flexibility Act. The FAA's authority to issue rules regarding aviation safety is found in Title 49 of the U.S. Code. Subtitle 1, Section 106 discusses the authority of the FAA Administrator. Subtitle VII, Aviation Programs, describes in more detail the scope of the agency's authority. This rulemaking is promulgated under the authority described in Subtitle VII, Part A, Subpart I, Section 40103. Under that section, the FAA is charged with prescribing regulations to assign the use of airspace necessary to ensure the safety of aircraft and the efficient use of airspace. This regulation is within the scope of that authority as it amends controlled airspace at the Kenai Municipal Airport, Kenai, AK.

Environmental Review

The FAA has determined that this action qualifies for categorical exclusion under the National Environmental Policy Act in accordance with FAA Order 1050.1E, ''Environmental Impacts: Policies and Procedures,'' paragraph 311a. This airspace action is not expected to cause any potentially significant environmental impacts, and no extraordinary circumstances exist that warrant preparation of an environmental assessment.

List of Subjects in 14 CFR Part 71

Airspace, Incorporation by reference, Navigation (air)

Adoption of the Amendment

In consideration of the foregoing, the Federal Aviation Administration amends 14 CFR Part 71 as follows:

PART 71—DESIGNATION OF CLASS A, B, C, D AND E AIRSPACE AREAS; AIR TRAFFIC SERVICE ROUTES; AND REPORTING POINTS

■ 1. The authority citation for 14 CFR Part 71 continues to read as follows:

Authority: 49 U.S.C. 106(g), 40103, 40113, 40120; E.O. 10854, 24 FR 9565, 3 CFR, 1959–1963 Comp., p. 389.

§ 71.1 [Amended]

■ 2. The incorporation by reference in 14 CFR 71.1 of the Federal Aviation Administration Order 7400.9X, Airspace Designations and Reporting Points, dated August 7, 2013, and effective September 15, 2013 is amended as follows:

Paragraph 5000 Class D Airspace

* * * * *

AAL AK D Kenai, AK [Amended]

Kenai Municipal Airport, AK
(Lat. 60°34′24″ N., long. 151°14′41″ W.)

That airspace extending upward from the surface to and including 2,600 feet MSL within a 5.2-mile radius of Kenai Municipal Airport, excluding the airspace below 1,100 feet MSL beyond 4 miles from the airport extending from the 310° bearing clockwise to the 346° bearing of the airport. This Class D airspace area is effective during the specific dates and times established in advance by a Notice to Airmen. The effective date and time will thereafter be continuously published in the Airport/Facility Directory.

Paragraph 6002 Class E airspace designated as surface areas.

* * * * *

AAL AK E2 Kenai, AK [Amended]

Kenai Municipal Airport, AK
(Lat. 60°34′24″ N., long. 151°14′41″ W.)

That airspace extending upward from the surface to and including 2600 feet MSL within a 5.2-mile radius of Kenai Municipal Airport, excluding the airspace below 1,100 feet MSL beyond 4 miles from the airport extending from the 310° bearing clockwise to the 346° bearing of the airport; and that airspace extending upward from the surface beginning at lat. 60°39′25″ N., long. 151°17′17″ W.; to lat. 60°45′01″ N., long. 151°10′27″ W.; to lat. 60°41′12″ N., long. 150°57′33″ W.; to lat. 60°35′34″ N., long. 151° 04′25″ W., thence counterclockwise along the 5.2-mile radius of the airport to the point of beginning. This Class E airspace area is effective during the specific dates and times established in advance by a Notice to Airmen. The effective date and time will thereafter be continuously published in the Airport/Facility Directory.

Paragraph 6004 Class E airspace areas designated as an extension to Class D or Class E surface area.

* * * * *

AAL AK E4 Kenai, AK [Amended]

Kenai Municipal Airport, AK
(Lat. 60°34′24″ N., long. 151°14′41″ W.)

That airspace extending upward from the surface beginning at lat. 60°39′25″ N., long. 151°17′17″ W.; to lat. 60°45′01″ N., long. 151°10′27″ W.; to lat. 60°41′12″ N., long. 150°57′33″ W.; to lat. 60°35′34″ N., long. 151° 04′25″ W., thence counterclockwise along the 5.2-mile radius of the airport to the point of beginning. This Class E airspace area is effective during the specific dates and times established in advance by a Notice to Airmen. The effective date and time will thereafter be continuously published in the Airport/Facility Directory.

Issued in Seattle, Washington, on October 23, 2013.

Clark Desing,

Manager, Operations Support Group, Western Service Center.

[FR Doc. 2013–25853 Filed 10–30–13; 8:45 am]

BILLING CODE 4910–13–P

ENVIRONMENTAL PROTECTION AGENCY

40 CFR Part 300

[EPA–HQ–SFUND–1990–0010; FRL–9900–30–Region 9]

National Oil and Hazardous Substances Pollution Contingency Plan; National Priorities List: Deletion of the Sola Optical USA, Inc. Superfund Site

AGENCY: Environmental Protection Agency (EPA).

ACTION: Final rule.

SUMMARY: The Environmental Protection Agency (EPA) Region 9 announces the deletion of the Sola Optical USA, Inc. Superfund Site (Site) located in Petaluma, California, from the National Priorities List (NPL). The NPL, promulgated pursuant to section 105 of the Comprehensive Environmental Response, Compensation, and Liability Act (CERCLA) of 1980, as amended, is an appendix of the National Oil and Hazardous Substances Pollution Contingency Plan (NCP). The EPA and the State of California, through the California Regional Water Quality Control Board—San Francisco Bay Region, have determined that all appropriate response actions under CERCLA have been completed. However, this deletion does not preclude future actions under Superfund.

DATES: This rule is effective October 31, 2013.

ADDRESSES: EPA has established a docket for this action under Docket Identification No. EPA–HQ–SFUND–1990–0010. All documents in the docket are listed on the *http://www.regulations.gov* Web site. Although listed in the index, some information is not publicly available, i.e., Confidential Business Information or other information whose disclosure is restricted by statute. Certain other material, such as copyrighted material, is not placed on the Internet and will be publicly available only in hard copy form. Publicly available docket materials are available either electronically through *http://www.regulations.gov* or in hard copy at the site information repositories.

Locations, contacts, phone numbers and viewing hours are:

Superfund Records Center, 95 Hawthorne St., Room 403, Mail Stop SFD–7C, San Francisco, CA 94105, (415) 536–2000, Mon–Fri: 8:00 a.m. to 5:00 p.m.

Petaluma Public Library, 100 Fairgrounds Drive, Petaluma CA 94952, (707) 763–9801, Mon, Thurs, Fri, Sat: 10:00 a.m. to 6:00 p.m., Tues, Wed: 10:00 a.m. to 9:00 p.m.

FOR FURTHER INFORMATION CONTACT: Dante Rodriguez, Remedial Project Manager, U.S. Environmental Protection Agency, Region 9, SFD–8–2, 75 Hawthorne Street, San Francisco, CA 94105, (415) 972–3166, email *rodriguez.dante@epa.gov.*

SUPPLEMENTARY INFORMATION: The site to be deleted from the NPL is: Sola Optical USA, Inc. Superfund Site, Petaluma, California. A Notice of Intent to Delete for this Site was published in the **Federal Register** on July 24, 2013.

The closing date for comments on the Notice of Intent to Delete was August 23, 2013. One set of public comments containing 15 comments was received, inquiring about the technical details of EPA's site investigation and remediation. EPA explained its technical rationale for all the questions raised, demonstrating that its investigation, remediation, and monitoring thereof justify the deletion of the Site. A responsiveness summary was prepared and placed in both the docket, EPA–HQ–SFUND–1990–0010, on *www.regulations.gov,* and in the local repositories listed above.

EPA maintains the NPL as the list of sites that appear to present a significant risk to public health, welfare, or the environment. Deletion from the NPL does not preclude further remedial action. Whenever there is a significant release from a site deleted from the NPL, the deleted site may be restored to the NPL without application of the hazard ranking system. Deletion of a site from the NPL does not affect responsible party liability in the unlikely event that future conditions warrant further actions.

List of Subjects in 40 CFR Part 300

Environmental protection, Air pollution control, Chemicals, Hazardous waste, Hazardous substances, Intergovernmental relations, Penalties, Reporting and recordkeeping requirements, Superfund, Water pollution control, Water supply.

Dated: October 22, 2013.

Jared Blumenfeld,

Regional Administrator, Region 9.

For reasons set out in the preamble, 40 CFR part 300 is amended as follows:

PART 300—NATIONAL OIL AND HAZARDOUS SUBSTANCES POLLUTION CONTINGENCY PLAN

■ 1. The authority citation for part 300 continues to read as follows:

Authority: 33 U.S.C. 1321(c)(2); 42 U.S.C. 9601–9657; E.O. 12777, 56 FR 54757, 3 CFR, 1991 Comp., p. 351; E.O. 12580, 52 FR 2923; 3 CFR, 1987 Comp., p. 193.

■ 2. Table 1 of Appendix B to part 300 is amended by removing ''CA'', ''Sola Optical USA, Inc., ''Petaluma''.

[FR Doc. 2013–25987 Filed 10–30–13; 8:45 am]

BILLING CODE 6560–50–P

GENERAL SERVICES ADMINISTRATION

41 CFR Parts 301–11, 301–74, Appendix E to Chapter 301, 304–3, and 304–5

[FTR Amendment 2013–01, FTR Case 2012–301; Docket 2012–0011, Sequence 1]

RIN 3090–AJ27

Federal Travel Regulation; Removal of Conference Lodging Allowance Provisions

AGENCY: Office of Government-wide Policy (OGP), General Services Administration (GSA).

ACTION: Final rule.

SUMMARY: GSA is amending the Federal Travel Regulation (FTR) by removing the conference lodging allowance reimbursement option for employees on temporary duty (TDY) travel. This case is included in GSA's retrospective review of existing regulations under Executive Order 13563. Additional information is located in GSA's retrospective review available at: *www.gsa.gov/improvingregulations.*

DATES: *Effective:* October 31, 2013.

FOR FURTHER INFORMATION CONTACT: For clarification of content, contact Mr. Cy Greenidge, Program Analyst, Office of Government-wide Policy, at 202–219–2349. Please cite FTR Amendment 2013–01; FTR case 2012–301. Contact the Regulatory Secretariat (MVCB), Attn: Ms. Hada Flowers, 1800 F Street NW., Washington, DC 20405, 202–501–4755, for information pertaining to status or publication schedules.

SUPPLEMENTARY INFORMATION:

A. Background

GSA published a proposed rule in the **Federal Register** on October 23, 2012, (77 FR 64791). The proposed rule recommended the removal of the conference lodging allowance option from the FTR. While the proposed rule indicated the conference lodging allowance allows travelers to exceed the lodging rate by up to 25 percent when the conference is sponsored by a Federal agency, this allowance also can apply to

travelers attending non-Government sponsored conferences. The proposed rule also incorrectly stated that an agency official must approve actual expense allowance requests, but there is no such mandate for the use of the conference lodging allowance. In actuality, the Government agency sponsoring a Government conference or the travel approving official of a Government employee attending a non-Government sponsored conference must authorize reimbursement of the conference lodging allowance when lodging is not available at the established lodging per diem rate.

The public had 60 calendar days to comment on the proposed rule. GSA made no significant changes to the substance of this final rule.

B. Analysis of Public Comments

Comments: Two respondents expressed support for the proposed rule by indicating that the conference lodging allowance should be removed promptly and that agencies need to have a way to limit and keep track of how travel dollars are spent.

Response: Although no response is required, GSA appreciates all comments.

Comments: One respondent stated that too many Federal employees attend conferences wasting taxpayer dollars instead of using alternatives (*e.g.,* teleconferencing, video conferencing, webinars).

Response: Agencies should always ensure and justify that travel is necessary to accomplish the agency mission, as well as consider the use of technologies (*e.g.,* teleconferencing, video conferencing, webinars) in lieu of travel.

Comments: Three respondents did not want the conference lodging allowance provision removed from the FTR. They indicated that the proposed rule did not take into account additional transportation costs that might occur if employees lodged away from the conference site; that removal of the conference lodging allowance would be extraordinarily burdensome for little or no financial benefit in terms of administrative costs; and that the removal of the conference lodging allowance will result in increasing agency travel expenditures for transportation.

Response: This rule amends FTR section 301–74.6 by indicating that when lodging is not available at the applicable per diem rate, travelers should construct a cost comparison, including all travel-related costs of the available options. If the cost comparison shows that obtaining lodging at the conference facility results in the lowest total travel costs, the agency may authorize actual expense reimbursement. Agencies must develop internal policies concerning when to authorize this method of reimbursement. The preamble to the proposed rule was incorrect about approval not being mandatory when using the conference lodging allowance; however, this has been addressed in the preamble of this final rule.

Comments: One respondent indicated that this rule would make it difficult for the hospitality industry to meet the lodging needs of Federal conference attendees.

Response: Removing the conference lodging allowance provision will allow employees to spend taxpayer dollars more prudently when traveling for the Federal Government. While industry may offer rates as it sees fit, travelers should always look for hotels that are at or below per diem when they are on official travel.

Comments: One respondent expressed frustration with their E-Gov Travel System when booking hotels and the costs of contract city pair flights.

Response: The purpose of this rule is to remove the conference lodging allowance provisions from the FTR. Therefore, the comments about electronic systems and contract carrier prices are beyond the scope of this final rule.

C. Executive Order 12866 and Executive Order 13563

Executive Orders (E.O.s) 12866 and 13563 direct agencies to assess all costs and benefits of available regulatory alternatives, and if regulation is necessary, to select regulatory approaches that maximize net benefits (including potential economic, environmental, public health and safety effects, distributive impacts, and equity). E.O. 13563 emphasizes the importance of quantifying both costs and benefits, of reducing costs, of harmonizing rules, and of promoting flexibility. This is not a significant regulatory action, and therefore, was not subject to review under Section 6(b) of E.O. 12866, Regulatory Planning and Review, dated September 30, 1993.

D. Regulatory Flexibility Act

This final rule will not have a significant economic impact on a substantial number of small entities within the meaning of the Regulatory Flexibility Act, 5 U.S.C. 601, *et seq.* This final rule is also exempt from the Administrative Procedure Act pursuant to 5 U.S.C. 553(a)(2) because it applies to agency management or personnel.

E. Paperwork Reduction Act

The Paperwork Reduction Act does not apply because the changes to the FTR do not impose recordkeeping or information collection requirements, or the collection of information from offerors, contractors, or members of the public that require the approval of OMB under 44 U.S.C. 3501, *et seq.*

F. Small Business Regulatory Enforcement Fairness Act

This final rule is also exempt from Congressional review prescribed under 5 U.S.C. 801. This final rule is not a major rule under 5 U.S.C. 804.

List of Subjects in 41 CFR Parts 301–11, 301–74, Appendix E to Chapter 301, 304–3, and 304–5

Acceptance of travel and related expenses from non-Federal sources, Administrative practices and procedures, Government employees, Travel and Per Diem expenses.

Dated: August 29, 2013.

Dan Tangherlini,

Administrator of General Services.

For the reasons set forth in the preamble, pursuant to 5 U.S.C. 5701–5709 and 31 U.S.C. 1353, GSA amends 41 CFR parts 301–11, 301–74, Appendix E to Chapter 301, 304–3, and 304–5 as set forth below:

PART 301–11—PER DIEM EXPENSES

■ 1. The authority citation for 41 CFR part 301–11 continues to read as follows:

Authority: 5 U.S.C. 5707.

§ 301–11.5 [Amended]

■ 2. Amend § 301–11.5 by—
■ a. Adding the word ''or'' at the end of paragraph (b);
■ b. Removing paragraph (c); and
■ c. Redesignating paragraph (d) as paragraph (c).

PART 301–74—CONFERENCE PLANNING

■ 3. The authority citation for 41 CFR part 301–74 continues to read as follows:

Authority: 5 U.S.C. 5707.

■ 4. Revise § 301–74.6 to read as follows:

§ 301–74.6 What can we do if we cannot find an appropriate conference facility at the chosen locality per diem rate?

While it is always desirable to obtain lodging facilities within the established lodging portion of the per diem rate for the chosen locality, it may not always be possible. In those instances when

lodging is not available at the applicable per diem rate, travelers should construct a cost comparison of all associated costs, including round-trip ground transportation, between finding lodging at the applicable per diem rate away from the conference locality and using the actual expense method at the conference locality as prescribed in Subpart D of Part 301–11 of this chapter.

§§ 301–74.7 through 301–74.10, 301–74.12, 301.74–22, and 301–74.23 [Removed]

■ 5. Remove §§ 301–74.7 through 301–74.10, 301–74.12, 301.74–22, and 301–74.23.

§§ 301–74.11, 301–74.13 through 301–74.19, and 301–74.24 through 301–74.26 [Redesignated as §§ 301–74.7, 301–74.8 through 301–74.14, and 301–74.22 through 301–74.24]

■ 6. Redesignate §§ 301–74.11, 301–74.13 through 301–74.19, and 301–74.24 through 301–74.26 as §§ 301–74.7, 301–74.8 through 301–74.14, and 301–74.22 through 301–74.24, respectively. A redesignation table is set forth below for the convenience of the reader:

Old section No.	Redesignated section No.
301–74.11	301–74.7
301–74.13	301–74.8
301–74.14	301–74.9
301–74.15	301–74.10
301–74.16	301–74.11
301–74.17	301–74.12
301–74.18	301–74.13
301–74.19	301–74.14
301–74.24	301–74.22
301–74.25	301–74.23
301–74.26	301–74.24

§ 301–74.9 [Amended]

■ 7. Amend newly redesignated § 301–74.9 in the first sentence by removing ''§ 301–74.15'' and adding ''§ 301–74.10'' in its place.

§ 301–74.10 [Amended]

■ 8. Amend the heading to newly redesignated § 301–74.10 by removing ''§ 301–74.14'' and adding ''§ 301–74.9'' in its place.

■ 9. Revise newly designated § 301–74.11 to read as follows:

§ 301–74.11 What must be included in any advertisement or application form relating to conference attendance?

Any advertisement or application for attendance at a conference described in § 301–74.9 must include notice of the prohibition against using a non-FEMA approved place of public accommodation for conferences. In addition, any executive agency, as defined in 5 U.S.C. 105, shall notify all non-Federal entities to which it provides Federal funds of this prohibition.

§ 301–74.12 [Amended]

■ 10. Amend newly redesignated § 301–74.12 by removing from the Note ''§ 301–74.17(a)'' and adding ''§ 301–74.12(a)'' in its place.

■ 11. Revise newly designated § 301–74.22 to read as follows:

§ 301–74.22 When should actual expense reimbursement be authorized for conference attendees?

You may authorize actual expenses under § 301–11.300 of this chapter when the applicable lodging rate is inadequate.

Appendix E, Chapter 301 [Amended]

■ 12. Amend Appendix E to Chapter 301 by—

■ a. Under the heading ''Terms'' by removing the paragraph ''Conference lodging allowance: The rate that is up to 25 percent above the established lodging per diem rate.'', and

■ b. Under the heading ''Notification,'' subheading ''Announcement and/or Invitations,'' by removing the paragraph ''Notice that conference lodging allowance applies if applicable.''

PART 304–3—EMPLOYEE RESPONSIBILITY

■ 13. The authority citation for 41 CFR part 304–3 continues to read as follows:

Authority: 5 U.S.C. 5707; 31 U.S.C. 1353.

§ 304–3.11 [Amended]

■ 14. Amend § 304–3.11—

■ a. In the heading by removing ''(per diem, actual expense, or conference lodging)'' and adding ''(per diem or actual expense)'' in its place; and

■ b. In the introductory paragraph by removing ''(per diem, actual expense, or conference lodging)'' and adding ''(per diem or actual expense)'' in its place.

PART 304–5—AGENCY RESPONSIBILITIES

■ 15. The authority citation for 41 CFR part 304–5 continues to read as follows:

Authority: 5 U.S.C. 5707; 31 U.S.C. 1353.

§ 304–5.4 [Amended]

■ 16. Amend § 304–5.4—

■ a. In the heading by removing ''(per diem, actual expense, or conference lodging)'' and adding ''(per diem or actual expense)'' in its place; and

■ b. In paragraph (a), in the introductory paragraph by removing ''(per diem, actual expense, or conference lodging)'' and adding ''(per diem or actual expense)'' in its place.

[FR Doc. 2013–26014 Filed 10–30–13; 8:45 am]

BILLING CODE 6820–14–P

DEPARTMENT OF HOMELAND SECURITY

Federal Emergency Management Agency

44 CFR Part 64

[Docket ID FEMA–2013–0002; [Internal Agency Docket No. FEMA–8303]

Suspension of Community Eligibility

AGENCY: Federal Emergency Management Agency, DHS.

ACTION: Final rule.

SUMMARY: This rule identifies communities where the sale of flood insurance has been authorized under the National Flood Insurance Program (NFIP) that are scheduled for suspension on the effective dates listed within this rule because of noncompliance with the floodplain management requirements of the program. If the Federal Emergency Management Agency (FEMA) receives documentation that the community has adopted the required floodplain management measures prior to the effective suspension date given in this rule, the suspension will not occur and a notice of this will be provided by publication in the **Federal Register** on a subsequent date. Also, information identifying the current participation status of a community can be obtained from FEMA's Community Status Book (CSB). The CSB is available at *http://www.fema.gov/fema/csb.shtm.*

DATES: *Effective Dates:* The effective date of each community's scheduled suspension is the third date (''Susp.'') listed in the third column of the following tables.

FOR FURTHER INFORMATION CONTACT: If you want to determine whether a particular community was suspended on the suspension date or for further information, contact David Stearrett, Federal Insurance and Mitigation Administration, Federal Emergency Management Agency, 500 C Street SW., Washington, DC 20472, (202) 646–2953.

SUPPLEMENTARY INFORMATION: The NFIP enables property owners to purchase Federal flood insurance that is not otherwise generally available from private insurers. In return, communities agree to adopt and administer local floodplain management measures aimed at protecting lives and new construction

from future flooding. Section 1315 of the National Flood Insurance Act of 1968, as amended, 42 U.S.C. 4022, prohibits the sale of NFIP flood insurance unless an appropriate public body adopts adequate floodplain management measures with effective enforcement measures. The communities listed in this document no longer meet that statutory requirement for compliance with program regulations, 44 CFR Part 59. Accordingly, the communities will be suspended on the effective date in the third column. As of that date, flood insurance will no longer be available in the community. We recognize that some of these communities may adopt and submit the required documentation of legally enforceable floodplain management measures after this rule is published but prior to the actual suspension date. These communities will not be suspended and will continue to be eligible for the sale of NFIP flood insurance. A notice withdrawing the suspension of such communities will be published in the **Federal Register**.

In addition, FEMA publishes a Flood Insurance Rate Map (FIRM) that identifies the Special Flood Hazard Areas (SFHAs) in these communities. The date of the FIRM, if one has been published, is indicated in the fourth column of the table. No direct Federal financial assistance (except assistance pursuant to the Robert T. Stafford Disaster Relief and Emergency Assistance Act not in connection with a flood) may be provided for construction or acquisition of buildings in identified SFHAs for communities not participating in the NFIP and identified for more than a year on FEMA's initial FIRM for the community as having flood-prone areas (section 202(a) of the Flood Disaster Protection Act of 1973, 42 U.S.C. 4106(a), as amended). This prohibition against certain types of Federal assistance becomes effective for the communities listed on the date shown in the last column. The Administrator finds that notice and public comment procedures under 5 U.S.C. 553(b), are impracticable and unnecessary because communities listed in this final rule have been adequately notified.

Each community receives 6-month, 90-day, and 30-day notification letters addressed to the Chief Executive Officer stating that the community will be suspended unless the required floodplain management measures are met prior to the effective suspension date. Since these notifications were made, this final rule may take effect within less than 30 days.

National Environmental Policy Act. This rule is categorically excluded from the requirements of 44 CFR Part 10, Environmental Considerations. No environmental impact assessment has been prepared.

Regulatory Flexibility Act. The Administrator has determined that this rule is exempt from the requirements of the Regulatory Flexibility Act because the National Flood Insurance Act of 1968, as amended, Section 1315, 42 U.S.C. 4022, prohibits flood insurance coverage unless an appropriate public body adopts adequate floodplain management measures with effective enforcement measures. The communities listed no longer comply with the statutory requirements, and after the effective date, flood insurance will no longer be available in the communities unless remedial action takes place.

Regulatory Classification. This final rule is not a significant regulatory action under the criteria of section 3(f) of Executive Order 12866 of September 30, 1993, Regulatory Planning and Review, 58 FR 51735.

Executive Order 13132, Federalism. This rule involves no policies that have federalism implications under Executive Order 13132.

Executive Order 12988, Civil Justice Reform. This rule meets the applicable standards of Executive Order 12988.

Paperwork Reduction Act. This rule does not involve any collection of information for purposes of the Paperwork Reduction Act, 44 U.S.C. 3501 *et seq.*

List of Subjects in 44 CFR Part 64

Flood insurance, Floodplains.

Accordingly, 44 CFR Part 64 is amended as follows:

PART 64—[AMENDED]

■ 1. The authority citation for Part 64 continues to read as follows:

Authority: 42 U.S.C. 4001 *et seq.;* Reorganization Plan No. 3 of 1978, 3 CFR, 1978 Comp.; p. 329; E.O. 12127, 44 FR 19367, 3 CFR, 1979 Comp.; p. 376.

§ 64.6 [Amended]

■ 2. The tables published under the authority of § 64.6 are amended as follows:

State and location	Community No.	Effective date authorization/cancellation of sale of flood insurance in community	Current effective map date	Date certain Federal assistance no longer available in SFHAs
Region III				
Maryland:				
Howard County, Unincorporated Areas	240044	October 22, 1971, Emerg; March 15, 1977, Reg; November 6, 2013, Susp	Nov. 6, 2013	Nov. 6, 2013.
West Virginia:				
Parkersburg, City of, Wood County	540214	July 1, 1974, Emerg; September 4, 1986, Reg; November 6, 2013, Susp	.....* do	Do.
Vienna, City of, Wood County	540215	June 12, 1975, Emerg; December 18, 1985, Reg; November 6, 2013, Susp	.....do	Do.
Wood County, Unincorporated Areas ...	540213	February 16, 1977, Emerg; March 4, 1985, Reg; November 6, 2013, Susp	.....do	Do.
Region IV				
Florida:				
Arcadia, City of, DeSoto County	120073	August 12, 1975, Emerg; June 3, 1988, Reg; November 6, 2013, Susp	.....do	Do.
Bowling Green, City of, Hardee County	120104	December 2, 1974, Emerg; May 4, 1988, Reg; November 6, 2013, Susp	.....do	Do.
DeSoto County, Unincorporated Areas	120072	August 26, 1975, Emerg; June 3, 1988, Reg; November 6, 2013, Susp	.....do	Do.
Hardee County, Unincorporated Areas	120103	April 1, 1976, Emerg; May 4, 1988, Reg; November 6, 2013, Susp	.....do	Do.

State and location	Community No.	Effective date authorization/cancellation of sale of flood insurance in community	Current effective map date	Date certain Federal assistance no longer available in SFHAs
Wauchula, City of, Hardee County	120105	July 28, 1975, Emerg; June 25, 1976, Reg; November 6, 2013, Susp	.....do	Do.
Zolfo Springs, Town of, Hardee County	120106	July 2, 1975, Emerg; May 4, 1988, Reg; November 6, 2013, Susp	.....do	Do.
Region V				
Indiana:				
LaPorte, City of, LaPorte County	180490	April 28, 1983, Emerg; April 1, 1993, Reg; November 6, 2013, Susp	.....do	Do.
LaPorte County, Unincorporated Areas	180144	January 15, 1976, Emerg; January 1, 1987, Reg; November 6, 2013, Susp	.....do	Do.
Long Beach, Town of, LaPorte County	185177	October 8, 1971, Emerg; March 23, 1973, Reg; November 6, 2013, Susp	.....do	Do.
Michiana Shores, Town of, LaPorte County.	180505	N/A, Emerg; November 12, 1991, Reg; November 6, 2013, Susp	.....do	Do.
Michigan City, City of, LaPorte County	180147	March 20, 1975, Emerg; August 17, 1981, Reg; November 6, 2013, Susp	.....do	Do.
Region VI				
Louisiana:				
Iberville Parish, Unincorporated Areas	220083	April 20, 1973, Emerg; June 1, 1978, Reg; November 6, 2013, Susp	.....do	Do.
Maringouin, Town of, Iberville Parish	220085	April 23, 1973, Emerg; September 1, 1981, Reg; November 6, 2013, Susp	.....do	Do.
Plaquemine, City of, Iberville Parish	220086	April 23, 1973, Emerg; August 26, 1977, Reg; November 6, 2013, Susp	.....do	Do.
Saint Gabriel, City of, Iberville Parish	220402	N/A, Emerg; July 12, 2001, Reg; November 6, 2013, Susp	.....do	Do.
White Castle, Town of, Iberville Parish	220088	April 23, 1973, Emerg; December 16, 1977, Reg; November 6, 2013, Susp	.....do	Do.
Region VIII				
Montana:				
Billings, City of, Yellowstone County	300085	January 15, 1974, Emerg; January 2, 1981, Reg; November 6, 2013, Susp	.....do	Do.
Laurel, City of, Yellowstone County	300086	March 19, 1975, Emerg; January 6, 1983, Reg; November 6, 2013, Susp	.....do	Do.
Yellowstone County, Unincorporated Areas.	300142	July 28, 1975, Emerg; November 18, 1981, Reg; November 6, 2013, Susp	.....do	Do.
Region X				
Alaska:				
Homer, City of, Kenai Peninsula Borough.	020107	N/A, Emerg; June 2, 2003, Reg; November 6, 2013, Susp	.....do	Do.

*-do- =Ditto.
Code for reading third column: Emerg.—Emergency; Reg.—Regular; Susp.—Suspension.

Dated: September 20, 2013.

David L. Miller,

Associate Administrator, Federal Insurance and Mitigation Administration, Department of Homeland Security, Federal Emergency Management Agency.

[FR Doc. 2013–25520 Filed 10–30–13; 8:45 am]

BILLING CODE 9110–12–P

DEPARTMENT OF DEFENSE

Defense Acquisition Regulations System

48 CFR Parts 212, 215, 225, and 252

RIN 0750–AH89

Defense Federal Acquisition Regulation Supplement: Only One Offer—Further Implementation (DFARS Case 2013–D001)

AGENCY: Defense Acquisition Regulations System, Department of Defense (DoD).

ACTION: Final rule.

SUMMARY: DoD is issuing a final rule amending the Defense Federal Acquisition Regulation Supplement (DFARS) to further implement DoD policy relating to competitive acquisitions in which only one offer is received, providing additional exceptions, and further addressing requests for data other than certified cost or pricing data from the Canadian Commercial Corporation.

DATES: *Effective* October 31, 2013.

FOR FURTHER INFORMATION CONTACT: Ms. Amy Williams, telephone 571–372–6106.

SUPPLEMENTARY INFORMATION:

I. Background

DoD published a proposed rule in the **Federal Register** at 78 FR 28785 on May 16, 2013, to further implement policy with regard to acquisitions in which only one offer is received and requests for data other than certified cost or pricing data from the Canadian

Commercial Corporation. This case is a follow-on to DFARS final rules published in the **Federal Register** under DFARS Case 2011–D013, Only One Offer (77 FR 39126 on June 29, 2012), and DFARS Case 2011–D049, Contracting with the Canadian Commercial Corporation (77 FR 43470 on July 24, 2012).

II. Applicability

The final rule applies to solicitations (including solicitations for task orders and delivery orders) issued on or after the publication date of the final rule.

III. Discussion and Analysis

No public comments were received. There are only minor editorial changes from the proposed rule that were made in the final rule. Revisions include:

- Renumbering section 12.301(f) subparagraphs due to DFARS baseline changes.
- Correcting, in section 12.301(f), prescription references cited for two provisions: 252.215–7007, Notice of Intent to Resolicit; and 252.215–7008, Only One Offer. Extraneous verbiage was removed from the prescription for 252.215–7004, Requirement for Submission of Data Other Than Certified Cost or Pricing Data—Modifications—Canadian Commercial Corporation.
- Revising the prescription at 215.371–6 to include a statement that provision 252.215–7007, Notice of Intent to Resolicit, should be included in solicitations for the acquisition of commercial items using Far part 12 procedures. This provision is included in the list at 212.301(f) as being applicable to solicitations for commercial items; however, the prescription at 215.371–6 inadvertently omitted restating applicability of the provision to FAR part 12 solicitations.
- Revising two prescriptions at 215.408(3) to include a statement that the provisions should be included in solicitations for the acquisition of commercial items using FAR part 12 procedures. The provisions are: 252.215–7003, Requirement for Data Other Than Certified Cost or Pricing Data—Canadian Commercial Corporation, and 252.215–7004, Requirement for Data Other Than Certified Cost or Pricing Data—Modifications—Canadian Commercial Corporation. These two provisions are included in the list at 212.301(f) as being applicable to solicitations for commercial items; however, the prescriptions at 215.408(3) inadvertently omitted restating applicability of the provisions to FAR part 12 solicitations.

IV. Executive Orders 12866 and 13563

Executive Orders (E.O.s) 12866 and 13563 direct agencies to assess all costs and benefits of available regulatory alternatives and, if regulation is necessary, to select regulatory approaches that maximize net benefits (including potential economic, environmental, public health and safety effects, distributive impacts, and equity). E.O. 13563 emphasizes the importance of quantifying both costs and benefits, of reducing costs, of harmonizing rules, and of promoting flexibility. This is not a significant regulatory action and, therefore, was not subject to review under section 6(b) of E.O. 12866, Regulatory Planning and Review, dated September 30, 1993. This rule is not a major rule under 5 U.S.C. 804.

IV. Regulatory Flexibility Act

A final regulatory flexibility analysis has been prepared consistent with the Regulatory Flexibility Act, 5 U.S.C. 601, *et seq.,* and is summarized as follows:

This rule further implements DoD policy relating to competitive acquisitions in which only one offer is received, providing additional exceptions, and further addressing requests for data other than certified cost or pricing data from the Canadian Commercial Corporation, especially relating to competitive solicitations when only one offer is received from the Canadian Commercial Corporation. The objective of the rule is to promote competition and ensure fair and reasonable prices by implementing DoD policy with regard to acquisitions when only one offer is received, including the Canadian Commercial Corporation.

There were no public comments in response to the proposed rule. There were no comments filed by the Chief Counsel for Advocacy of the Small Business Administration.

The final regulatory flexibility analysis for the final rule under FARS case 2011–D013, Only One Offer, was addressed in the **Federal Register** notice published in the **Federal Register** (77 FR 39126) on June 29, 2012). With regard to DFARS Case 2011–D049, Contracting with the Canadian Commercial Corporation (77 FR 43470 on July 24, 2012), DoD certified that there was no significant economic impact on a substantial number of small entities within the meaning of the Regulatory Flexibility Act, 5 U.S.C. 601, *et seq.,* because it only impacted Canadian business concerns. The changes proposed in this rule are not expected to impact a substantial number of small entities within the meaning of the Regulatory Flexibility Act, 5 U.S.C. 601, *et seq.,* because the only changes impacting domestic entities are the added exceptions for architect-engineer services and the 8(a) program, which are more in the nature of a clarification than a change.

- Architect-engineer services are purchased under the Brooks Act. The final rule for Only One Offer was not made applicable to part 36. This rule specifically clarifies that it is inapplicable.
- The final rule for Only One Offer was not made applicable to set-asides under FAR part 19. The final rule specifically excluded small business set-asides and set asides under the HUBZone Program, the Service-Disabled Veteran-Owned Small Business Procurement Program, and the Women-Owned Small Business Program. The 8(a) Program was inadvertently omitted from the list of specific exclusions. In accordance with FAR 19.805–1, an acquisition offered to the SBA shall be awarded on the basis of competition limited to eligible 8(a) firms if two conditions are met: (1) the anticipated total value of the contract exceeds the thresholds at FAR 19.805–1(a)(2); and (2) there must be a reasonable expectation that at least two eligible and responsible 8(a) firms will submit offers and that award can be made at a fair and reasonable price.

The final rule imposes no new reporting, recordkeeping, or other information collection requirements. The submission of certified cost or pricing data or data other than certified cost or pricing data is covered in FAR 15.4 and associated clauses in 52.215, OMB clearance 9000–013.

There are no known significant alternatives to the rule that would adequately implement the DoD policy. There is no significant economic impact on a substantial number of small entities.

V. Paperwork Reduction Act

The final rule does not impose any additional information collection requirements that require approval under the Paperwork Reduction Act (5 U.S.C. chapter 35). The submission of certified cost or pricing data or data other than certified cost or pricing data required for negotiation is covered in FAR 15.4 and associated clauses in FAR 52.215, and in OMB clearance 9000–013, Cost or Pricing Data Requirements and Information Other Than Cost or Pricing Data, in the amount of 10,101,684 hours.

List of Subjects in 48 CFR Parts 212, 215, 225, and 252

Government procurement.

Manuel Quinones,

Editor, Defense Acquisition Regulations System.

Therefore, 48 CFR parts 212, 215, 225, and 252 are amended as follows:

■ 1. The authority citation for 48 CFR parts 212, 215, 225, and 252 continues to read as follows:

Authority: 41 U.S.C. 1303 and 48 CFR chapter 1.

PART 212—ACQUISITION OF COMMERCIAL ITEMS

■ 2. Section 212.301 is amended by—

■ a. Redesignating paragraphs (f)(xi) through (lxii) as (f)(xiii) through (lxv), respectively;

■ b. Adding new paragraphs (f)(xi), (xii), and (xiv); and

■ c. Revising newly designated paragraph (f)(xiii).

The additions and revision read as follows:

212.301 Solicitation provisions and contract clauses for the acquisition of commercial items.

(f) * * *

(xi) Use the provision at 252.215–7003, Requirements for Submission of Data Other Than Certified Cost or Pricing Data—Canadian Commercial Corporation, as prescribed at 215.408(3)(i).

(xii) Use the clause at 252.215–7004, Requirement for Submission of Data other Than Certified Cost or Pricing Data—Modifications—Canadian Commercial Corporation, as prescribed at 215.408(3)(ii).

(xiii) Use the provision at 252.215–7007, Notice of Intent to Resolicit, as prescribed at 215.371–6.

(xiv) Use the provision 252.215–7008, Only One Offer, as prescribed at 215.408(4).

* * * * *

PART 215—CONTRACTING BY NEGOTIATION

215.371–3 [Amended]

■ 3. Section 215.371–3 is amended—

■ a. In paragraph (a), by adding elipses ''. . .'' after the words ''reasonable expectation'' and before the words ''that two or more offerors,'', and removing ''at one level'' and adding ''at a level'' in its place.;

■ b. In paragraph (b) introductory text, by removing ''215.371–4(b) and adding ''215.371–4(a)(3);

■ c. In paragraph (b)(1), removing ''at one level'' and adding ''at a level'' in its place; and

■ d. In paragraph (b)(2)(i), removing '', in accordance with FAR provision 52.215–20'' and removing ''FAR 15.403–1(c)'' and adding ''FAR 15.403–1(b)'' in its place.

■ 4. Section 215.371–4 is revised to read as follows:

215.371–4 Exceptions.

(a) The requirements at section 215.371–2 do not apply to—

(1) Acquisitions at or below the simplified acquisition threshold;

(2) Acquisitions in support of contingency, humanitarian or peacekeeping operations, or to facilitate defense against or recovery from nuclear, biological, chemical, or radiological attack;

(3) Small business set-asides under FAR subpart 19.5, set asides offered and accepted into the 8(a) Program under FAR subpart 19.8, or set-asides under the HUBZone Program (see FAR 19.1305(c)), the Service-Disabled Veteran-Owned Small Business Procurement Program (see FAR 19.1405(c)), or the Women-Owned Small Business Program (see FAR 19.1505(d));

(4) Acquisitions of basic or applied research or development, as specified in FAR 35.016(a), that use a broad agency announcement; or

(5) Acquisitions of architect-engineer services (see FAR 36.601–2).

(b) The applicability of an exception in paragraph (a) of this section does not eliminate the need for the contracting officer to seek maximum practicable competition and to ensure that the price is fair and reasonable.

■ 5. Section 215.371–6 is added to read as follows:

215.371–6 Solicitation provision.

Use the provision at 252.215–7007, Notice of Intent to Resolicit, in competitive solicitations, including solicitations using FAR part 12 procedures for the acquisition of commercial items, that will be solicited for fewer than 30 days, unless an exception at 215.371–4 applies or the requirement is waived in accordance with 215.371–5.

215.403–1 [Amended]

■ 6. Section 215.403–1 is amended by—

■ a. In second sentence of paragraph (c)(1)(A)*(1),* removing ''price analysis.'' and adding ''price analysis; and'' in its place.

■ b. In paragraph (c)(4)(C), removing ''215.408(5)'' and adding ''215.408(3)'' in its place.

■ 7. Section 215.408 is amended by—

■ a. Revising paragraph (3);

■ b. In paragraph (4)(i), removing ''215.371–4(a)(1)'' and adding ''215.371–4(a)'' in its place;

■ c. In paragraph (4)(ii), removing ''but that provision will only take effect as specified in 252.215–7008'' and adding ''if the contracting officer is requesting submission of data other than certified cost or pricing data with the offer'' in its place;

■ d. Removing paragraph (5); and

■ e. Redesignating paragraph (6) as paragraph (5).

The revision reads as follows:

215.408 Solicitation provisions and contract clauses.

* * * * *

(3) When contracting with the Canadian Commercial Corporation—

(i)(A) Use the provision at 252.215–7003, Requirement for Data Other Than Certified Cost or Pricing Data—Canadian Commercial Corporation—

(*1*) In lieu of FAR 52.215–20, Requirement for Data Other Than Certified Cost or Pricing Data, in a solicitation, including solicitations using FAR part 12 procedures for the acquisition of commercial items, for a sole source acquisition from the Canadian Commercial Corporation that is—

(*i*) Cost-reimbursement, if the contract value is expected to exceed $700,000; or

(*ii*) Fixed-price, if the contract value is expected to exceed $500 million; or

(*2*) In lieu of FAR 52.215–20, in a solicitation, including solicitations using FAR part 12 procedures for the acquisition of commercial items, for a sole source acquisition from the Canadian Commercial Corporation that does not meet the thresholds specified in paragraph (3)(i)(A)(*1*), if approval is obtained as required at 225.870–4(c)(2)(ii); and

(B) Do not use 252.225–7003 in lieu of FAR 52.215–20 in competitive acquisitions. The contracting officer may use FAR 52.215–20 with its Alternate IV, as prescribed at 15.408(l)(3), even if offers from the Canadian Commercial Corporation are anticipated; and

(ii)(A) Use the clause at 252.215–7004, Requirement for Data Other Than Certified Cost or Pricing Data—Modifications—Canadian Commercial Corporation—

(*1*) In a solicitation, including solicitations using FAR part 12 procedures for the acquisition of commercial items, for a sole source acquisition, from the Canadian Commercial Corporation and resultant contract that is—

(*i*) Cost-reimbursement, if the contract value is expected to exceed $700,000; or

(*ii)* Fixed-price, if the contract value is expected to exceed $500 million;

(*2*) In a solicitation, including solicitations using FAR part 12 procedures for the acquisition of commercial items, for a sole source acquisition from the Canadian Commercial Corporation and resultant contract that does not meet the thresholds specified in paragraph (3)(ii)(A) (*1*), if approval is obtained as required at 225.870–4(c)(2)(ii); or

(3)(i) In a solicitation, including solicitations using FAR part 12 procedures for the acquisition of commercial items, for a competitive acquisition that includes FAR 52.215–21, Requirement for Data Other Than Certified Cost or Pricing Data—Modifications, or that meets the thresholds specified in paragraph (3)(ii)(A) (*1*).

(ii) The contracting officer shall then select the appropriate clause to include in the contract (52.215–21 only if award is not to the Canadian Commercial Corporation; or 252.215–7004 if award is to the Canadian Commercial Corporation and necessary approval is obtained in accordance with 225.870–4(c)(2)(ii)); and

(B) The contracting officer may specify a higher threshold in paragraph (b) of the clause 252.215–7004.

* * * * *

PART 225—FOREIGN ACQUISITION

■ 8. Section 225.870–4 is amended by—

■ a. Revising paragraph (c)(2);

■ b. In paragraph (c)(3), removing ''215.408(5)(i)'' and adding ''215.408(3)(i)'' in its place.

The revision reads as follows:

225.870–4 Contracting procedures.

* * * * *

(c) * * *

(2) The Canadian Commercial Corporation is not exempt from the requirement to submit data other than certified cost or pricing data, as defined in FAR 2.101. In accordance with FAR 15.403–3(a)(1)(ii), the contracting officer shall require submission of data other than certified cost or pricing data from the offeror, to the extent necessary to determine a fair and reasonable price.

(i) No further approval is required to request data other than certified cost or pricing data from the Canadian Commercial Corporation in the following circumstances:

(A) In a solicitation for a sole source acquisition that is—

(*1*) Cost-reimbursement, if the contract value is expected to exceed $700,000; or

(*2*) Fixed-price, if the contract value is expected to exceed $500 million.

(B) If the Canadian Commercial Corporation submits the only offer in response to a competitive solicitation that meets the thresholds specified in paragraph (c)(2)(i)(A) of this section.

(C) For modifications that exceed $150,000 in contracts that meet the criteria in paragraph (c)(2)(i)(A) or (B) of this section.

(D) In competitive solicitations in which data other than certified cost or pricing data are required from all offerors.

(ii) In any circumstances other than those specified in paragraph (c)(2)(i) of this section, the contracting officer shall only require data other than certified cost or pricing data from the Canadian Commercial Corporation if the head of the contracting activity, or designee no lower than two levels above the contracting officer, determines that data other than certified cost or pricing data are needed (or in the case of modifications that it is reasonably certain that data other than certified cost or pricing data will be needed) in order to determine that the price is fair and reasonable) (see FAR 15.403–3(a).

* * * * *

PART 252—SOLICITATION PROVISIONS AND CONTRACT CLAUSES

252.215–7003 [Amended]

■ 9. Section 252.215–7003 is amended by, in the introductory text, removing ''215.408(5)(i)'' and adding ''215.408(3)(i)'' in its place.

■ 10. Section 252.215–7004 is amended—

■ a. In the introductory text, by removing ''215.408(5)(ii)'' and adding ''215.408(3)(ii)'' in its place;

■ b. By removing the clause date of ''(JUL 2012)'' and adding ''(OCT 2013)'' in its place;

■ c. In paragraph (b) introductory text, by removing ''the simplified acquisition threshold'' and adding ''$150,000'' in its place; and

■ d. By adding introductory text after the clause date and before paragraph (a) to read as follows:

252.215–7004 Requirement for Submission of Data Other Than Certified Cost or Pricing Data—Modifications—Canadian Commercial Corporation.

* * * * *

This clause, in lieu of FAR 52.215–21, applies only if award is to the Canadian Commercial Corporation.

* * * * *

252.215–7007 [Amended]

■ 11. Section 252.215–7007 is amended by, in the introductory text, removing ''215.408(3)'' and adding ''215.371–6'' in its place.

■ 12. Section 252.215–7008 is revised to read as follows:

252.215–7008 Only One Offer.

As prescribed at 215.408(4), use the following provision:

Only One Offer (Oct 2013)

(a) After initial submission of offers, the Offeror agrees to submit any subsequently requested additional cost or pricing data if the Contracting Officer notifies the Offeror that—

(1) Only one offer was received; and

(2) Additional cost or pricing data is required in order to determine whether the price is fair and reasonable or to comply with the statutory requirement for certified cost or pricing data (10 U.S.C. 2306a and FAR 15.403–3).

(b) *Requirement for submission of additional cost or pricing data.* Except as provided in paragraph (c) of this provision, the Offeror shall submit additional cost or pricing data as follows:

(1) If the Contracting Officer notifies the Offeror that additional cost or pricing data are required in accordance with paragraph (a) of this clause, the data shall be certified unless an exception applies (FAR 15.403–1(b)).

(2) *Exceptions from certified cost or pricing data.* In lieu of submitting certified cost or pricing data, the Offeror may submit a written request for exception by submitting the information described in the following paragraphs. The Contracting Officer may require additional supporting information, but only to the extent necessary to determine whether an exception should be granted, and whether the price is fair and reasonable.

(i) *Identification of the law or regulation establishing the price offered.* If the price is controlled under law by periodic rulings, reviews, or similar actions of a governmental body, attach a copy of the controlling document, unless it was previously submitted to the contracting office.

(ii) *Commercial item exception.* For a commercial item exception, the Offeror shall submit, at a minimum, information on prices at which the same item or/similar items have previously been sold in the commercial market that is adequate for evaluating the reasonableness of the price for this acquisition. Such information may include—

(A) For catalog items, a copy of or identification of the catalog and its date, or the appropriate pages for the offered items, or a statement that the catalog is on file in the buying office to which the proposal is being submitted. Provide a copy or describe current discount policies and price lists (published or unpublished), *e.g.,* wholesale, original equipment manufacturer, or reseller. Also explain the basis of each offered price and its relationship to the established catalog price, including how the proposed price relates to the price of recent sales in quantities similar to the proposed quantities;

(B) For market-priced items, the source and date or period of the market quotation or other basis for market price, the base amount,

and applicable discounts. In addition, describe the nature of the market; or

(C) For items included on an active Federal Supply Service Multiple Award Schedule contract, proof that an exception has been granted for the schedule item.

(3) The Offeror grants the Contracting Officer or an authorized representative the right to examine, at any time before award, books, records, documents, or other directly pertinent records to verify any request for an exception under this provision, and the reasonableness of price. For items priced using catalog or market prices, or law or regulation, access does not extend to cost or profit information or other data relevant solely to the Offeror's determination of the prices to be offered in the catalog or marketplace.

(4) *Requirements for certified cost or pricing data.* If the Offeror is not granted an exception from the requirement to submit certified cost or pricing data, the following applies:

(i) The Offeror shall prepare and submit certified cost or pricing data and supporting attachments in accordance with the instructions contained in Table 15–2 of FAR 15.408, which is incorporated by reference with the same force and effect as though it were inserted here in full text. The instructions in Table 15–2 are incorporated as a mandatory format to be used, unless the Contracting Officer and the Offeror agree to a different format.

(ii) As soon as practicable after agreement on price, but before contract award (except for unpriced actions such as letter contracts), the offeror shall submit a Certificate of Current Cost or Pricing Data, as prescribed by FAR 15.406–2.

(c) If the Offeror is the Canadian Commercial Corporation, certified cost or pricing data are not required. If the Contracting Officer notifies the Canadian Commercial Corporation that additional data other than certified cost or pricing data are required in accordance with 225.870–4(c), the Canadian Commercial Corporation shall obtain and provide the following:

(1) Profit rate or fee (as applicable).

(2) Analysis provided by Public Works and Government Services Canada to the Canadian Commercial Corporation to determine a fair and reasonable price (comparable to the analysis required at FAR 15.404–1).

(3) Data other than certified cost or pricing data necessary to permit a determination by the U.S. Contracting Officer that the proposed price is fair and reasonable *[U.S. Contracting Officer to provide description of the data required in accordance with FAR 15.403–3(a)(1) with the notification].*

(4) As specified in FAR 15.403–3(a)(4), an offeror who does not comply with a requirement to submit data that the U.S. Contracting Officer has deemed necessary to determine price reasonableness or cost realism is ineligible for award unless the head of the contracting activity determines that it is in the best interest of the Government to make the award to that offeror.

(d) If negotiations are conducted, the negotiated price should not exceed the offered price.

(End of provision)

252.215–7009 [Amended]

■ 13. Section 252.215–7009 is amended by, in the introductory text, removing ''215.408(6)'' and adding ''215.408(5)'' in its place.

[FR Doc. 2013–25728 Filed 10–30–13; 8:45 am]

BILLING CODE 5001–06–P

DEPARTMENT OF DEFENSE

Defense Acquisition Regulations System

48 CFR Part 237

RIN 0750–AI05

Defense Federal Acquisition Regulation Supplement: Private Sector Notification Requirements of In-Sourcing Actions DFARS Case 2012–D036

AGENCY: Defense Acquisition Regulations System, Department of Defense (DoD).

ACTION: Interim rule.

SUMMARY: DoD is issuing an interim rule amending the Defense Federal Acquisition Regulation Supplement (DFARS) to implement a section of the National Defense Authorization Act regarding private sector notification of in-sourcing actions.

DATES: *Effective date:* October 31, 2013.

Comment date: Comments on the interim rule should be submitted in writing to the address shown below on or before December 30, 2013, to be considered in the formation of a final rule.''

ADDRESSES: Submit comments identified by DFARS Case 2012–D036 using any of the following methods:

○ *Regulations.gov: http://www.regulations.gov.* Submit comments via the Federal eRulemaking portal by entering ''DFARS Case 2012–D036'' under the heading ''Enter keyword or ID'' and selecting ''Search.'' Select the link ''Submit a Comment'' that corresponds with ''DFARS Case 2012–D036.'' Follow the instructions provided at the ''Submit a Comment'' screen. Please include your name, company name (if any), and ''DFARS Case 2012–D036 on your attached document.

○ *Email: dfars@osd.mil.* Include DFARS Case 2012–D036 in the subject line of the message.

○ *Fax:* 571–372–6094.

○ *Mail:* Defense Acquisition Regulations System, Attn: Annette Gray, OUSD(AT&L)DPAP/DARS, Room 3B855, 3060 Defense Pentagon, Washington, DC 20301–3060.

Comments received generally will be posted without change to *http://www.regulations.gov,* including any personal information provided. To confirm receipt of your comment(s), please check *www.regulations.gov,* approximately two to three days after submission to verify posting (except allow 30 days for posting of comments submitted by mail).

FOR FURTHER INFORMATION CONTACT: Annette Gray, Defense Acquisition Regulations System, OUSD(AT&L)DPAP/DARS, Room 3B855, 3060 Defense Pentagon, Washington, DC 20301–3060. Telephone 571–372–6093; facsimile 571–372–6101.

SUPPLEMENTARY INFORMATION:

I. Background

This interim rule revises DFARS 237.102–79 to implement section 938 of the National Defense Authorization Act (NDAA) for Fiscal Year (FY) 2012 regarding private sector notification of in-sourcing actions.

II. Discussion and Analysis

Section 938 of the NDAA requires the Secretary of Defense to establish procedures for the timely notification of any contractor who performs a function that the Secretary plans to convert (in-source) to performance by DoD civilian employees. A written notification will be provided to affected incumbent contractors within 20 business days of the contracting officer's receipt of a decision by the cognizant component in-sourcing program official to in-source services. The notification will summarize why the services are being insourced and must be coordinated with the component's in-sourcing program official. A copy of the notification will be provided to the congressional defense committees.

III. Executive Orders 12866 and 13563

Executive Orders (E.O.s) 12866 and 13563 direct agencies to assess all costs and benefits of available regulatory alternatives and, if regulation is necessary, to select regulatory approaches that maximize net benefits (including potential economic, environmental, public health and safety effects, distributive impacts, and equity). E.O. 13563 emphasizes the importance of quantifying both costs and benefits, of reducing costs, of harmonizing rules, and of promoting flexibility. This is not a significant regulatory action and, therefore, was not subject to review under section 6(b) of E.O. 12866, Regulatory Planning and Review, dated September 30, 1993. This

rule is not a major rule under 5 U.S.C. 804.

IV. Regulatory Flexibility Act

DoD does not expect this interim rule to have a significant economic impact on a substantial number of small entities within the meaning of the Regulatory Flexibility Act, 5 U.S.C. 601, *et seq.,* because it impacts only those incumbent contractors for which an in-sourcing determination has been made. The DFARS change relates solely to a notification requirement of a decision, made outside of acquisition regulatory channels, to convert a contracted function to performance by DoD civilian employees. The impact of this interim rule will be to heighten the awareness of impacted firms. An initial regulatory flexibility analysis has been performed and is summarized as follows:

This action implements section 938 of the National Defense Authorization Act (NDAA) for Fiscal Year 2012 regarding private sector notification of in-sourcing actions. Section 938 of the NDAA requires the Secretary of Defense to establish procedures for the timely notification of any contractor that performs a function that the Secretary plans to convert (in-source) to performance by DoD civilian employees and to also provide the congressional defense committees a copy of any such notification.

The interim rule will apply to all small business concerns that have contracts with DoD agencies that are being in-sourced. The most recent data from the DoD Office of Small Business Programs for fiscal years 2009 thru 2012 shows an average of 59,362 small business concerns have contracts with DoD. The degree of potential impact of this rule to those concerns, however, is unknown since there is no way to gauge in advance the extent of any future in-sourcing decisions.

There are no projected reporting, recordkeeping, and other compliance requirements associated with this rule. The rule does not duplicate, overlap, or conflict with any other Federal rules. DoD has not identified any alternatives that would fulfill the requirements of the statute and reduce impact on small businesses. Any impact of the rule is expected to be beneficial to small businesses, by giving them timely notification of planned in-sourcing actions.

DoD invites comments from small business concerns and other interested parties on the expected impact of this rule on small entities. DoD will also consider comments from small entities concerning the existing regulations in subparts affected by this rule in accordance with 5 U.S.C. 610. Interested parties must submit such comments separately and should cite 5 U.S.C 610 (DFARS Case 2012–D036), in correspondence.

V. Paperwork Reduction Act

The rule does not contain any information collection requirements that require the approval of the Office of Management and Budget under the Paperwork Reduction Act (44 U.S.C. chapter 35).

VI. Determination To Issue an Interim Rule

A determination has been made under the authority of the Secretary of Defense, pursuant to 41 U.S.C. 1707(d), that urgent and compelling reasons exist to promulgate this rule on an interim basis without prior opportunity for public comment. This action is necessary to implement section 938 of the National Defense Authorization Act (NDAA) for Fiscal Year 2012, which requires DoD to provide notification to the private sector of in-sourcing action determinations. Section 938 requires the Secretary of Defense to establish procedures for the timely notification of any incumbent contractor who performs a function that the Secretary plans to convert (in-source) to performance by DoD civilian employees. The notification must also be provided to the congressional defense committees. In-sourcing decisions may have a significant economic effect on firms that have contracts with DoD. Firms that are not notified on a timely basis of an in-sourcing determination that impacts them have less time to prepare for lost revenue and to make staffing adjustments. The rule, in addition to ensuring that there will be timely notification to affected contractors, should help facilitate a more seamless transition in services when implementing in-sourcing requirements. Nonetheless, pursuant to 41 U.S.C. 1707 and FAR 1.501–3(b), DoD will consider public comments received in response to this interim rule in the formation of the final rule.

List of Subjects in 48 CFR Part 237

Government procurement.

Manuel Quinones,

Editor, Defense Acquisition Regulations System.

Therefore, 48 CFR part 237 are amended as follows:

PART 237—SERVICE CONTRACTING

■ 1. The authority citation for 48 CFR part 237 continues to read as follows:

Authority: 41 U.S.C. 1303 and 48 CFR chapter 1.

■ 2. Section 237.102–79 is revised to read as follows:

237.102–79 Private sector notification requirements in support of in-sourcing actions.

In accordance with 10 U.S.C. 2463, contracting officers shall provide written notification to affected incumbent contractors of Government in-sourcing determinations. Notification shall be provided within 20 business days of the contracting officer's receipt of a decision from the cognizant component in-sourcing program official. The notification will summarize the requiring official's final determination as to why the service is being in-sourced and shall be coordinated with the component's in-sourcing program official. No formal hiring or contract-related actions may be initiated prior to such notification, except for preliminary internal actions associated with hiring or contract modification. The memorandum on private sector notification requirements in support of in-sourcing actions is available at PGI 237.1, under the Supplemental Information tab.

[FR Doc. 2013–25727 Filed 10–30–13; 8:45 am]

BILLING CODE 5001–06–P

DEPARTMENT OF DEFENSE

Defense Acquisition Regulations System

48 CFR Part 245

RIN 0750–AI03

Defense Federal Acquisition Regulation Supplement: Approval of Rental Waiver Requests (DFARS Case 2013–D006)

AGENCY: Defense Acquisition Regulations System, Department of Defense (DoD).

ACTION: Final rule.

SUMMARY: DoD is issuing a final rule amending the Defense Federal Acquisition Regulation Supplement (DFARS) to remove the Director of Defense Security Cooperation Agency from the approval process for waiver or reduction of charges for the use of Government property on work for foreign governments or international organizations.

DATES: *Effective* October 31, 2013.

FOR FURTHER INFORMATION CONTACT: Annette Gray, telephone 571–372–6093.

SUPPLEMENTARY INFORMATION:

I. Discussion

DoD is revising the DFARS to implement a policy that will allow contracting officers to approve requests for waiver or reduction of rental charges for the use of Government property on work for foreign governments or international organizations. Over the past year the Director of Defense Security Cooperation Agency (DSCA) has seen a significant increase in the number of requests with extremely low dollar values over the rental period. Currently, DSCA is required to approve requests in which the agency has no equities. This final rule will allow the contracting officer to process the request for waiver or reduction of charges for the use of Government property on work for foreign governments or international organizations without a separate review by DSCA. Removing DSCA from the approval process will expedite contractors' requests, while still protecting the interests of the Government.

II. Publication of This Final Rule for Public Comment Is Not Required by Statute

Publication of proposed regulations, 41 U.S.C. 1707, is the statute, which applies to the publication of the Federal Acquisition Regulation. Paragraph (a)(1) of the statute requires that a procurement policy, regulation, procedure or form (including an amendment or modification thereof) must be published for public comment if it relates to the expenditure of appropriated funds, and has either a significant effect beyond the internal operating procedures of the agency issuing the policy, regulation, procedure or form, or has a significant cost or administrative impact on contractors or offerors. This final rule is not required to be published for public comment, because the changes are not substantive and only modify the internal operating procedures of DoD.

III. Executive Orders 12866 and 13563

Executive Orders (E.O.s) 12866 and 13563 direct agencies to assess all costs and benefits of available regulatory alternatives and, if regulation is necessary, to select regulatory approaches that maximize net benefits (including potential economic, environmental, public health and safety effects, distributive impacts, and equity). E.O. 13563 emphasizes the importance of quantifying both costs and benefits, of reducing costs, of harmonizing rules, and of promoting flexibility. This is not a significant regulatory action and, therefore, was not subject to review under section 6(b) of E.O. 12866, Regulatory Planning and Review, dated September 30, 1993. This rule is not a major rule under 5 U.S.C. 804.

IV. Regulatory Flexibility Act

The Regulatory Flexibility Act does not apply to this rule because this final rule does not constitute a significant DFARS revision within the meaning of FAR 1.501–1, and 41 U.S.C. 1707 does not require publication for public comment.

V. Paperwork Reduction Act

The rule does not contain any information collection requirements that require the approval of the Office of Management and Budget under the Paperwork Reduction Act (44 U.S.C. chapter 35).

List of Subjects in 48 CFR Part 245

Government procurement.

Manuel Quinones,

Editor, Defense Acquisition Regulations System.

Therefore, 48 CFR part 245 is amended as follows:

PART 245—GOVERNMENT PROPERTY

■ 1. The authority citation for 48 CFR part 245 continues to read as follows:

Authority: 41 U.S.C. 1303 and 48 CFR chapter 1.

■ 2. Section 245.302 is amended by revising paragraph (3)(ii) to read as follows:

245.302 Contracts with foreign governments or international organizations.

* * * * *

(3) * * *

(ii) Requests for waiver or reduction of charges for the use of Government property on work for foreign governments or international organizations shall be submitted to the contracting officer, who is authorized to approve the requests in consultation with the appropriate functional specialist.

[FR Doc. 2013–25729 Filed 10–30–13; 8:45 am]

BILLING CODE 5001–06–P

DEPARTMENT OF DEFENSE

Defense Acquisition Regulations System

48 CFR Part 252

RIN 0750–AI09

Defense Federal Acquisition Regulation Supplement: New Designated Country—Croatia (DFARS Case 2013–D031)

AGENCY: Defense Acquisition Regulations System, Department of Defense (DoD).

ACTION: Final rule.

SUMMARY: DoD is issuing a final rule to amend the Defense Federal Acquisition Regulation Supplement (DFARS) to add Croatia as a new designated country under the World Trade Organization Government Procurement Agreement (WTO GPA). Croatia joined the European Union, which is a party to the WTO GPA, on July 1, 2013.

DATES: *Effective* October 31, 2013.

FOR FURTHER INFORMATION CONTACT: Ms. Annette Gray, Defense Acquisition Regulations System, OUSD (AT&L)DPAP/DARS, Room 3B855, 3060 Defense Pentagon, Washington, DC 20301–3060. Telephone 571–372–6093; facsimile 571–372–6101.

SUPPLEMENTARY INFORMATION:

I. Background

The European Union is a party to the WTO GPA and has assumed rights and obligations under the WTO GPA on behalf of its member states. On July 1, 2013, Croatia became a member of the European Union. Therefore, the European Union has committed to assume rights and obligations on behalf of Croatia under the WTO GPA. On June 27, 2012, the WTO Committee on Government Procurement accepted the European Union notification indicating Croatia's coverage. The United States, which is also a party to the WTO GPA, has agreed to waive discriminatory purchasing requirements for eligible products and suppliers of Croatia (78 FR 60368).

Therefore, this rule adds Croatia to the list of World Trade Organization Government Procurement Agreement countries wherever it appears in the DFARS, as part of the definition of ''designated country.''

II. Publication of This Final Rule for Public Comment Is Not Required by Statute

''Publication of proposed regulations'', 41 U.S.C. 1707, is the

statute which applies to the publication of the Federal Acquisition Regulation. Paragraph (a)(1) of the statute requires that a procurement policy, regulation, procedure or form (including an amendment or modification thereof) must be published for public comment if it relates to the expenditure of appropriated funds, and has either a significant effect beyond the internal operating procedures of the agency issuing the policy, regulation, procedure or form, or has a significant cost or administrative impact on contractors or offerors. This final rule is not required to be published for public comment, because it is just updating the lists of designated countries in order to reflect the fact that Croatia is now a member of the European Union.

III. Executive Orders 12866 and 13563

Executive Orders (E.O.s) 12866 and 13563 direct agencies to assess all costs and benefits of available regulatory alternatives and, if regulation is necessary, to select regulatory approaches that maximize net benefits (including potential economic, environmental, public health and safety effects, distributive impacts, and equity). E.O. 13563 emphasizes the importance of quantifying both costs and benefits, of reducing costs, of harmonizing rules, and of promoting flexibility. This is not a significant regulatory action and, therefore, was not subject to review under section 6(b) of E.O. 12866, Regulatory Planning and Review, dated September 30, 1993. This rule is not a major rule under 5 U.S.C. 804.

IV. Regulatory Flexibility Act

The Regulatory Flexibility Act does not apply to this rule because this final rule does not constitute a significant DFARS revision within the meaning of FAR 1.501–1, and 41 U.S.C. 1707 does not require publication for public comment.

V. Paperwork Reduction Act

The Paperwork Reduction Act does apply, because the rule affects the response of an offeror that is offering a product of Croatia to the information collection requirements in the provisions at DFARS 252.225–7020, due to the changed definition of ''designated country'' at DFARS 252.225–7021. The offeror no longer needs to list a product from Croatia under ''other end products,'' because Croatia is now a designated country. This information collection requirement is currently approved under OMB clearances 0704–0229. The impact, however, is negligible.

List of Subjects in 48 CFR Part 252

Government procurement.

Manuel Quinones,

Editor, Defense Acquisition Regulations System.

Therefore, 48 CFR part 252 is amended as follows:

PART 252—SOLICITATION PROVISIONS AND CONTRACT CLAUSES

■ 1. The authority citation for 48 CFR part 252 continues to read as follows:

Authority: 41 U.S.C. 1303 and 48 CFR chapter 1.

252.225–7017 [Amended]

■ 2. Amend section 252.225–7017 by—

■ a. Removing the clause date ''(AUG 2013)'' and adding ''(OCT 2013)'' in its place; and

■ b. In paragraph (a), in the definition of ''Designated country'' in paragraph (i) adding, in alphabetical order, the country of ''Croatia''.

252.225–7021 [Amended]

■ 3. Amend section 252.225–7021 by—

■ a. Removing the clause date ''(AUG 2013)'' and adding ''(OCT 2013)'' in its place; and

■ b. In paragraph (a), in the definition of ''Designated country'' in paragraph (i) adding, in alphabetical order, the country of ''Croatia''.

252.225–7045 [Amended]

■ 4. Amend section 252.225–7045 by—

■ a. Removing the date ''(AUG 2013)'' and adding ''(OCT 2013)'' in its place; and

■ b. In paragraph (a), in the definition of ''Designated country'' in paragraph (1), adding, in alphabetical order, the country of ''Croatia''.

[FR Doc. 2013–25730 Filed 10–30–13; 8:45 am]

BILLING CODE 5001–06–P

DEPARTMENT OF DEFENSE

Defense Acquisition Regulations System

48 CFR Part 252

RIN 0750–AH79

Defense Federal Acquisition Regulation Supplement: New Free Trade Agreement—Panama (DFARS Case 2012–D044)

AGENCY: Defense Acquisition Regulations System, Department of Defense (DoD).

ACTION: Final rule.

SUMMARY: DoD has adopted as final, with changes, an interim rule amending the Defense Federal Acquisition Regulation Supplement (DFARS) to implement the United States—Panama Trade Promotion Agreement. This Trade Promotion Agreement is a free trade agreement that provides for mutually non-discriminatory treatment of eligible products and services from Panama.

DATES: *Effective* October 31, 2013.

FOR FURTHER INFORMATION CONTACT: Ms. Amy Williams, Telephone 571–372–6106.

SUPPLEMENTARY INFORMATION:

I. Background

DoD published an interim rule in the **Federal Register** at 77 FR 68699 on November 16, 2012, to implement the United States—Panama Trade Promotion Agreement. No respondents submitted public comments in response to the interim rule; however, a conforming change was made to the Duty-Free Entry clause, an amendment was made to the Photovoltaic Devices—Certificate clause to correct the electronic Code of Federal Regulations, and a correction was made to Alternate I of the Buy American Act–Free Trade Agreements-Balance of Payments Program Certificate. Therefore, DoD is converting the interim rule to a final rule with changes.

II. Executive Orders 12866 and 13563

Executive Orders (E.O.s) 12866 and 13563 direct agencies to assess all costs and benefits of available regulatory alternatives and, if regulation is necessary, to select regulatory approaches that maximize net benefits (including potential economic, environmental, public health and safety effects, distributive impacts, and equity). E.O. 13563 emphasizes the importance of quantifying both costs and benefits, of reducing costs, of harmonizing rules, and of promoting flexibility. This is not a significant regulatory action and, therefore, was not subject to review under section 6(b) of E.O. 12866, Regulatory Planning and Review, dated September 30, 1993. This rule is not a major rule under 5 U.S.C. 804.

III. Regulatory Flexibility Act

DoD certifies that this final rule will not have a significant economic impact on a substantial number of small entities within the meaning of the Regulatory Flexibility Act, 5 U.S.C. 601, et seq., because the Department of Defense only applies the trade agreements to the non-defense items listed at DFARS 225.401–70, and acquisitions that are set aside or

provide other forms of preference for small businesses are exempt. FAR 19.502–2 states that acquisitions that do not exceed $150,000 (with some exceptions) are automatically reserved exclusively for small business concerns.

IV. Paperwork Reduction Act

This rule affects the certification and information collection requirements in the provisions at DFARS 252.225–7020 and 252.225–7035 and the clause at 252.225–7013, currently approved under OMB Control Number 0704–229, titled Defense Federal Acquisition Regulation Supplement part 225, Foreign Acquisition, and related clauses, in accordance with the Paperwork Reduction Act (44 U.S.C. chapter 35). The impact, however, is negligible, because it is just a question of under which category offered goods from Panama would be listed and inclusion of products of Panama in the definition of ''eligible products'' in acquisitions that are equal to or exceed $202,000. The rule also affects DFARS 252.225–7018, which is a variant of the Buy American-trade agreements certifications already approved, which was issued as an interim rule under DFARS Case 2011–D046 (76 FR 78858, December 20, 2011).

List of Subjects in 48 CFR Part 252

Government procurement.

Manuel Quinones,

Editor, Defense Acquisition Regulations System.

Accordingly, the interim rule amending 48 CFR part 252, which was published at 77 FR 68699 on November 16, 2012, is adopted as a final rule with the following changes:

PART 252—SOLICITATION PROVISIONS AND CONTRACT CLAUSES

■ 1. The authority citation for 48 CFR part 252 continues to read as follows:

Authority: 41 U.S.C. 1303 and 48 CFR chapter 1.

■ 2. Section 252.225–7013 is amended—

■ a. By removing the clause date ''(JUN 2012)'' and adding ''(OCT 2013)'' in its place;

■ b. By revising the paragraph (a) definition for ''Eligible product''; and

■ c. By amending the paragraph (a) definition for '''Qualifying country'' and ''qualifying country end product'''' by adding the term ',basic or alternate'' at the end of the sentence.

The revision reads as follows:

252.225–7013 Duty-Free Entry

* * * * *

(a) * * *

Eligible product means—

(i) *Designated country end product* as defined in the Trade Agreements clause of this contract;

(ii) *Free Trade Agreement country end product,* other than a *Bahrainian end product,* a *Moroccan end product,* a *Panamanian end product,* or a *Peruvian end product,* as defined in the Buy American—Free Trade Agreements—Balance of Payments Program clause of this contract, basic or its Alternate II;

(iii) *Canadian end product* as defined in Alternate I or Alternate III of the Buy American—Free Trade Agreements—Balance of Payments Program clause of this contract; or

(iv) *Free Trade Agreement country end product* other than a *Bahrainian end product, Korean end product, Moroccan end product, Panamanian end product,* or *Peruvian end product* as defined in Alternate IV or Alternate V of the Buy American—Free Trade Agreements—Balance of Payments Program clause of this contract.

* * * * *

252.225–7018 [Amended]

■ 3. Section 252.225–7018 paragraph (c)(6) is amended by removing ''$203,000'' and adding ''$202,000'' in its place.

■ 4. Section 252.225–7035, Alternate I is revised as follows:

252.225–7035 Buy American—Free Trade Agreements—Balance of Payments Program Certificate.

* * * * *

ALTERNATE I (OCT 2013)

As prescribed in *225.1101*(9)(ii), substitute the phrase ''Canadian end product'' for the phrases ''Bahrainian end product,'' ''Free Trade Agreement country,'' ''Free Trade Agreement country end product,'' ''Moroccan end product,'' ''Panamanian end product,'' and ''Peruvian end products'' in paragraph (a) of the basic provision; substitute the phrase ''Canadian end products'' for the phrase ''Free Trade Agreement country end products other than Bahrainian end products, Moroccan end products, Panamanian end products, or Peruvian end products'' in paragraphs (b)(2) and (c)(2)(ii) of the basic provision; and delete the phrase ''Australian or'' from paragraph (c)(2)(i) of the basic provision.

* * * * *

[FR Doc. 2013–25726 Filed 10–30–13; 8:45 am]

BILLING CODE 5001–06–P

Proposed Rules

Federal Register
Vol. 78, No. 211
Thursday, October 31, 2013

This section of the FEDERAL REGISTER contains notices to the public of the proposed issuance of rules and regulations. The purpose of these notices is to give interested persons an opportunity to participate in the rule making prior to the adoption of the final rules.

DEPARTMENT OF ENERGY

10 CFR Part 430

[Docket No. EERE–2011–BT–DET–0072]

RIN 1904–AC51

Energy Conservation Program for Consumer Products: Proposed Determination of Miscellaneous Residential Refrigeration Products as Covered Products

AGENCY: Office of Energy Efficiency and Renewable Energy, Department of Energy.

ACTION: Supplemental proposed determination.

SUMMARY: The U.S. Department of Energy (DOE) has preliminarily determined that wine chillers and other residential refrigeration products that incorporate a compressor but do not meet the current regulatory definitions for electric refrigerator, refrigerator-freezer, and freezer, qualify for coverage under the Energy Policy and Conservation Act (EPCA) as amended. This proposal also covers residential ice makers. Today's notice supplements an earlier proposed determination in which DOE tentatively concluded that residential refrigeration products that do not incorporate a compressor should be covered by energy conservation standards. As part of its review of residential refrigeration products generally, DOE is soliciting public comment on the feasibility of covering compressor-based miscellaneous residential refrigeration products based on the same criteria that had been evaluated earlier for non-compressor based residential refrigeration products.

DATES: DOE will accept written comments, data, and information on this notice, but no later than December 2, 2013.

ADDRESSES: The docket is available for review at regulations.gov, including **Federal Register** notices, framework documents, public meeting attendee lists and transcripts, comments, and other supporting documents/materials. All documents in the docket are listed in the regulations.gov index. Not all documents listed in the index may be publicly available, such as information that is exempt from public disclosure. The docket Web page can be found at *http://www.regulations.gov/#!docketDetail;D=EERE-2011-BT-DET-0072.*

For further information on how to submit or review public comments or view hard copies of the docket, contact Ms. Brenda Edwards at (202) 586–2945 or email: *Brenda.Edwards@ee.doe.gov.*

FOR FURTHER INFORMATION CONTACT: Mr. Lucas Adin, U.S. Department of Energy, Office of Energy Efficiency and Renewable Energy, Building Technologies Program, EE–2J, 1000 Independence Avenue SW., Washington, DC 20585–0121. Telephone: (202) 287–1317. Email: *Lucas.Adin@ee.doe.gov.*

In the Office of General Counsel, contact Mr. Michael Kido, U.S. Department of Energy, Office of the General Counsel, GC–71, 1000 Independence Avenue SW., Washington, DC 20585–0121. Telephone: (202) 586–8145. Email: *Michael.Kido@hq.doe.gov.*

Table of Contents

I. Statutory Authority
II. Current Rulemaking Process
III. Scope of Coverage
IV. Evaluation of the Annual Energy Use of Thermoelectric and Absorption Refrigeration Products
A. Coverage Necessary or Appropriate to Carry Out Purposes of EPCA
B. Average Household Energy Use
1. Vapor Compression Wine Chillers
2. Thermoelectric Refrigeration Products
3. Absorption Refrigeration Products
V. Procedural Issues and Regulatory Review
A. Review Under Executive Order 12866
B. Review Under the Regulatory Flexibility Act
C. Review Under the Paperwork Reduction Act of 1995
D. Review Under the National Environmental Policy Act of 1969
E. Review Under Executive Order 13132
F. Review Under Executive Order 12988
G. Review Under the Unfunded Mandates Reform Act of 1995
H. Review Under the Treasury and General Government Appropriations Act of 1999
I. Review Under Executive Order 12630
J. Review Under the Treasury and General Government Appropriations Act of 2001
K. Review Under Executive Order 13211
L. Review Under the Information Quality Bulletin for Peer Review
VI. Public Participation
A. Submission of Comments
B. Issues on Which DOE Seeks Comments

I. Statutory Authority

Title III of the Energy Policy and Conservation Act (EPCA), as amended (42 U.S.C. 6291, *et seq.*), sets forth various provisions designed to improve energy efficiency. Part B of Title III of EPCA (42 U.S.C. 6291–6309) established the ''Energy Conservation Program for Consumer Products Other Than Automobiles,'' which covers consumer products and certain commercial products (i.e. ''covered products'').[1]

EPCA specifies a list of covered consumer products that includes refrigerators, refrigerator-freezers, and freezers. Although EPCA did not define any of these products, it specified that the extent of DOE's coverage would apply to those refrigerator, refrigerator-freezers, and freezers that can be operated by alternating current (AC) electricity, are not designed to be used without doors, and include a compressor and condenser as an integral part of the cabinet assembly. (42 U.S.C. 6292(a)(1)) EPCA did not preclude or otherwise foreclose the possibility that other consumer refrigeration products, such as those residential refrigeration products addressed in today's notice, could also be covered if they satisfy certain prerequisites.

Those prerequisites, when met, permit the Secretary of Energy to classify additional types of consumer products as covered products. For a given product to be classified as a covered product, the Secretary must determine that (1) covering that product is either necessary or appropriate to carry out the purposes of EPCA and (2) the average annual per-household energy use by products of such type is likely to exceed 100 kWh per year. (42 U.S.C. 6292(b)(1)).

With respect to the terms ''electric refrigerator'' and ''electric refrigerator-freezer,'' DOE had defined these items in terms of their ability to safely store fresh food. In so doing, the agency has amended the definitions of ''electric refrigerator'' and ''electric refrigerator-freezer'' in 10 CFR 430.2 to separate them from other miscellaneous residential refrigeration products such as wine chillers. DOE established this

[1] Upon codification in the U.S. Code, Part B was re-designated Part A for editorial reasons.

separation using temperature as the means of distinguishing between these groups of products, with 39 °F being the dividing line between these groups. This temperature denotes the recommended maximum temperature for the safe storage of food. It also distinguishes these products from ''all-refrigerators,'' which are a small and special subset of refrigerators.[2] Under the current regulatory approach, those products that can achieve this temperature and that otherwise meet the EPCA criteria for coverage as refrigerators, refrigerator-freezers, or freezers (i.e., designed to be used with doors and include a compressor and condenser as an integral part of the cabinet assembly) would be treated and regulated as electric refrigerators and electric refrigerator-freezers, while those that cannot meet the temperature requirements would fall outside of the scope of these definitions. See, e.g. 66 FR 57845 (Nov. 19, 2001) and 75 FR 78810 (Dec. 16, 2010). As a result, DOE generally views products such as wine chillers as a type of product not addressed by the original EPCA coverage of refrigerators and refrigerator-freezers. Today's proposed coverage determination addresses those miscellaneous residential refrigeration products that fall outside of this already-established regulatory scope.

When attempting to cover additional product types, DOE must first determine whether the criteria described above in 42 U.S.C. 6292(b)(1) are met. Once those criteria have been satisfied, the Secretary may begin to prescribe energy conservation standards for a covered product. See 42 U.S.C. 6295(o) and (p). In order to set standards for a given product that has been added as a newly covered product pursuant to 42 U.S.C. 6292(b)(1), the Secretary must determine that four additional criteria are met. First, the average per household energy use within the United States by the products of such type (or class) exceeded 150 kilowatt-hours (kWh) (or its British thermal unit (Btu) equivalent) for any 12-month period ending before such determination. Second, the aggregate household energy use within the United States by products of such type (or class) exceeded 4,200,000,000 kilowatt-hours (or its Btu equivalent) for any such 12-month period. Third, a substantial improvement in the energy efficiency of products of such type (or class) is technologically feasible. And fourth, the application of a labeling rule under 42 U.S.C. 6294 to such type (or class) is not likely to be sufficient to induce manufacturers to produce, and consumers and other persons to purchase, covered products of such type (or class) that achieve the maximum energy efficiency that is technologically feasible and economically justified. (42 U.S.C. 6295(l)(1)).

In addition to the above, if DOE issues a final determination that miscellaneous residential refrigeration products are covered products, DOE will consider test procedures for these products and will determine if these products satisfy the required criteria of 42 U.S.C. 6295(l)(1) prior to setting any energy conservation standards for them.

II. Current Rulemaking Process

On November 8, 2011, DOE published a proposed coverage determination for non-compression equipped residential refrigeration products in anticipation of a rulemaking to address these products and related residential refrigeration products. 76 FR 69147. On February 23, 2012, DOE began a scoping process to set potential energy conservation standards and test procedures for wine chillers, non-compressor equipped residential refrigeration products, and residential icemakers, by publishing a notice of public meeting, and providing a framework document that addressed potential standards and test procedure rulemakings. 77 FR 7547. Since that time, DOE has determined that coverage for these products should treat vapor compression wine chillers, non-vapor compression refrigeration products, hybrid refrigeration products, and residential ice makers as a combined product type distinct from the types of refrigerators, refrigerator-freezers, and freezers currently covered by EPCA. DOE reached this determination after evaluating the various information it had been able to collect and the comments submitted by interested parties in response to the earlier notices. If, after further public comment submitted in response to today's notice, DOE determines that coverage of these products is warranted, DOE will consider setting both test procedures and energy conservation standards for these products, which would proceed in the same manner described in the proposed determination published on November 8, 2011. See 76 FR at 69149.

III. Scope of Coverage

DOE is proposing to adopt a determination that would extend coverage to all residential refrigeration products that are not currently addressed by those provisions regulating the energy efficiency of residential refrigeration products (42 U.S.C. 6292(a)(1)). DOE is considering this course of action to examine the feasibility of ensuring that these products achieve a minimum level of efficiency, while meeting the prescribed statutory prerequisites. As a result, those products that (1) are not capable of reaching the requisite temperature for safe food storage (i.e. 39 °F), (2) do not include a condenser and compressor as an integral part of the product's cabinet assembly, or (3) are designed solely for the production and storage of ice, would, if adopted by DOE, be treated as covered products.

DOE seeks feedback from interested parties on this proposed scope of coverage.

IV. Evaluation of the Annual Energy Use of Thermoelectric and Absorption Refrigeration Products

The following sections describe DOE's tentative evaluation of whether miscellaneous residential refrigeration products fulfill the EPCA criteria for being added as covered products. As stated previously, DOE may classify a consumer product as a covered product if (1) classifying products of such type as covered products is necessary and appropriate to carry out the purposes of EPCA; and (2) the average annual per-household energy use by products of such type is likely to exceed 100 kilowatt-hours (or its Btu equivalent) per year. 42 U.S.C. 6292(b)(1).

A. Coverage Necessary or Appropriate To Carry Out Purposes of EPCA

In DOE's tentative view, the coverage of miscellaneous residential refrigeration products is both necessary and appropriate to carry out the purposes of EPCA. These products consume energy generated from limited energy supplies and their regulation would be likely to result in the improvement of their energy efficiency. Accordingly, establishing standards for these products fall squarely within the overall statutory goals set out in EPCA to: (1) Conserve energy supplies through energy conservation programs; and (2) provide for improved energy efficiency of major appliances and certain other consumer products. (42 U.S.C. 6201)

As discussed in the November 2011 proposed determination, DOE is currently considering initiating an

[2] All-refrigerators, under DOE's definition, do not have a compartment for the freezing and long-term storage of food at temperatures below 32 °F but may contain a compartment of 0.50 cubic feet capacity or less for the freezing and storage of ice. These products use a standardized compartment temperature of 38 °F in the current Appendix A1 test procedure, and 39 °F in the Appendix A test procedure that will be required beginning September 15, 2014.

energy conservation standard rulemaking addressing wine chillers. As a prerequisite to the setting of standards for these products, DOE seeks to establish that wine chillers are a distinct type of covered product under EPCA. DOE is also interested in ensuring that both compressor-based and non-compressor-based products would be covered as part of this approach in order to prevent a mass shift in the market from compressor-based to alternative refrigeration technologies such as thermoelectric- and absorption-based systems that currently fall outside of EPCA's scope of coverage for refrigeration products. Thus, DOE proposed in the previous notice to extend coverage to non-compressor based refrigeration products. To ensure that DOE is able to consider energy conservation standards for the other products that currently fall outside the regulatory coverage established by EPCA, the proposal in this notice addresses all other products that are not presently covered in addition to those products already addressed by the November 2011 notice, including wine chiller products that incorporate a compressor, and residential ice makers.

DOE also notes that, with respect to the potential for labeling requirements to serve as an adequate inducement for manufacturers to produce—and consumers to purchase—energy efficient residential refrigeration products, DOE does not currently have sufficient information to determine whether such an approach would be likely to satisfy this condition. See 42 U.S.C. 6295(l)(1)(D). While DOE plans to investigate this issue with respect to any proposed rule that it may issue, the agency seeks information on this matter to help it ascertain the effectiveness of such an approach with respect to the residential refrigeration products addressed by today's notice.

B. Average Household Energy Use

DOE estimated that the average household energy use for vapor compression wine chillers, the primary types of residential refrigeration products that do not incorporate a compressor (thermoelectric and absorption wine chillers and refrigerators), residential ice makers, and hybrid refrigeration products (consisting of both a wine chiller and a refrigerator, refrigerator-freezer or freezer). DOE found no evidence that non-vapor compression freezers are used in U.S. households, so energy use estimates for these products are not provided.

1. Vapor Compression Wine Chillers

DOE conducted testing on eight vapor compression wine chillers with rated capacities of 17, 48, 50, 57, 132, and 147 bottles. These products were tested using the test procedures prescribed by the California Energy Commission (CEC) (2012 Appliance Efficiency Regulations, CEC–400–2012–019–CMF, Table A–1, p. 70). The measured energy consumption of these products ranged from 161 kWh to 480 kWh.

DOE compared the energy consumption of two vapor compression wine chillers measured in the field with the maximum allowable energy use for products of their size, as required under the California Energy Commission (CEC) standard for automatic defrost wine chillers, and found that the field energy use was lower by approximately one-half. DOE also conducted closed-door testing of eight vapor compression wine chillers in typical room-temperature conditions of 72 °F and found that the energy use for this condition was also on average about half (46 percent) the energy use measured in 90 °F ambient conditions. This observation suggests that if the usage factor for vapor compression wine chillers (the factor applied to the actual energy use measured in a 90 °F closed-door test to obtain a result representative of typical room conditions) did not consider the impact of door openings, it should be 0.46 rather than the 0.85 factor used in the CEC test procedure. If consideration is given for some limited number of door openings, a usage factor equal to 0.55 may be appropriate—this factor is consistent with an assumption that the energy use associated with door openings is equal to roughly one-fifth of the closed-door energy use.[3]

Based on limited field data and laboratory testing at different ambient temperature conditions, DOE believes the energy use estimates based on the current CEC test procedure for these products are high. As discussed above, use of the 0.55 usage factor appears to be more appropriate than the 0.85 usage factor prescribed by the current CEC test. Hence, in order to estimate field energy use for wine chillers, DOE adjusted the reported energy use of wine chillers (which is based on the CEC test procedure) by dividing the reported energy use by 0.85 and multiplying by 0.55.

DOE acquired data on the distribution of vapor compression wine chiller internal volumes (or capacities) found in U.S. households from a study that used online surveys.[4] However, DOE did not have energy use rating information for these products and instead assumed that these products all consume the maximum allowable energy as allowed by the CEC energy standard. Using the average capacity of vapor compression wine chillers from these data (3.6 cubic feet), and the CEC energy standard (adjusted for the differences between field and test procedure energy use as described above) to represent average energy use, DOE estimated that the average annual energy consumption of vapor compression wine chillers is 268 kWh.

The online surveys in the study also provided information on the saturation of vapor compression wine chillers found in U.S. households. Using these data, DOE found a market saturation rate of 1.60% for vapor compression wine chillers, yielding a national stock estimate of 1,860,000. Together with the above information on the average annual energy consumption of vapor compression wine chillers, DOE estimates the national energy consumption of vapor compression wine chillers to be 0.50 terawatt-hours (TWh) per year.

Finally, the online surveys provided data on the distribution of ages of wine chillers (both vapor compression and thermoelectric). From these data, DOE derived an estimate of the lifetime of wine chillers of approximately 4.5 years. Together with the above estimate of the national stock of vapor compression wine chillers, DOE estimates annual sales of vapor compression wine chillers at 410,000 units.

2. Thermoelectric Wine Chillers

This section provides an update to the estimates of energy use by residential thermoelectric refrigeration products that DOE provided in the notice of proposed determination published on November 2011. *See* 76 FR at 69150. Since that notice's publication, DOE conducted laboratory testing of three thermoelectric wine chillers (DOE TE WC Data, No. 6). These products had rated capacities of 6, 12, and 28 bottles. They were tested using the CEC test procedure (2012 Appliance Efficiency Regulations, CEC–400–2012–019–CMF, Table A–1, p. 70). The testing yielded measured energy usage for these products ranging from 413 kWh to 550 kWh. However, two of these three products were not able to maintain the

[3] Dividing 0.55 by 0.46 and subtracting 1.0 from the quotient results in a value roughly equal to one-fifth.

[4] Greenblatt, J. B., et al. (2013). ''U.S. Residential Miscellaneous Refrigeration Products: Results from Amazon Mechanical Turk Surveys,'' Lawrence Berkeley National Laboratory, Report number 6194E, April.

55 °F compartment temperature target for wine chillers in the required 90 °F test room temperature. When tested in a 72 °F room temperature and applying a 1.2 usage factor[5] to account for door openings, the measured energy use of the products ranged from 142 kWh to 664 kWh. For these tests, all three products were able to maintain the 55 °F compartment temperature target; however, the 28-bottle product just barely maintained this temperature in its coldest setting. The metered data and laboratory test results together indicate that thermoelectric wine chiller annual energy use exceeds the 100 kWh per year threshold set by EPCA as a prerequisite for establishing coverage.

DOE also acquired energy consumption data from six thermoelectric wine chillers measured under field conditions (two in residential homes and four in an office with an average ambient temperature of approximately 70 °F), and gathered energy use data for 35 thermoelectric wine chillers from manufacturer and/or retailer Web sites. (TE CC, No. 9) Taken together, these products had rated capacities from 0.6 to 4.9 cubic feet, with average annual energy use ranging from 183 to 803 kWh.

Including the previously discussed laboratory test data for three units, the thermoelectric wine chiller data represented 44 individual measurements, shown in Table 1. DOE developed a linear regression using all data weighted equally:

$$UEC = 82.67*C + 222.6$$

Where

UEC = unit energy consumption in kWh/yr

C = wine chiller capacity in cubic feet (analysis of wine chiller data from manufacturer Web sites indicates a relationship between number of wine bottles and capacity of 8.22 wine bottles per cubic foot. This factor was used to convert rated capacities in bottles into rated capacities in cubic feet.)

TABLE 1—ENERGY CONSUMPTION DATA FOR THERMOELECTRIC WINE CHILLERS

Source	Volume (Cu. Ft.)	Annual energy consumption (kWh)
Manufacturer Web site	0.56	310
	0.56	183
	0.64	365
	0.73	183
	0.81	183
	0.81	201
	0.81	201
	0.88	292
	0.88	292
	0.97	183
	0.99	183
	1.17	292
	1.17	219
	1.17	292
	1.20	548
	1.24	365
	1.41	548
	1.46	365
	1.46	219
	1.62	365
	1.62	237
	1.69	365
	1.69	365
	1.69	365
	1.77	365
	1.87	475
	2.05	365
	2.30	548
	2.30	402
	2.30	438
	2.40	548
	2.47	438
	2.75	475
	4.94	803
	4.94	657
Laboratory test ..	0.64	142
	1.08	439
	2.26	664
Field measurement	0.73	427
	0.97	266
	1.46	216
	1.82	248
	3.41	608
	6.81	482

The online surveys in the study described in section IV.B.1 provided information on the distribution of thermoelectric wine chiller capacities. Using the average capacity of thermoelectric wine chillers from these data (1.51 cubic feet), and the above linear regression of unit energy consumption versus capacity, DOE estimated the average annual energy consumption of thermoelectric wine chillers to be 348 kWh. Note that this represents 30 percent greater energy use than the vapor compression wine chiller average, whereas the average product volume is 58 percent less than the average for vapor compression wine chillers.

The online surveys also provided saturation data for thermoelectric wine chillers found in U.S. households. Using these data, DOE found a saturation rate of 9.0% for thermoelectric wine chillers, yielding a national stock estimate of 10,500,000. Together with the above information on the average annual energy consumption of thermoelectric wine chillers, DOE estimates national energy consumption of thermoelectric wine chillers to be 3.64 TWh per year.

Using the estimate of the lifetime of wine chillers described above (4.5 years) along with the above estimate of the national stock of thermoelectric wine chillers, DOE estimates annual sales of these products at 2,300,000 units.

3. Thermoelectric Refrigerators

Very little energy consumption information was available for non-vapor compression refrigerators. DOE tested two thermoelectric refrigerators at ambient temperatures of both 72 °F and 90 °F. Neither product was able to maintain a 39 °F compartment temperature in the 90 °F condition, and only one of the two was able to maintain this compartment temperature in the 72 °F condition. Estimating the expected energy use of such products, if used in the field, is complicated by the inability of the products to maintain the compartment temperature. However, DOE estimated that the average annual energy consumption in field use would be 566 kWh.

The online surveys conducted as part of the study described in the previous sections provided saturation data for thermoelectric refrigerators found in U.S. households. Using these data, DOE found a market saturation rate of 2.5% for thermoelectric refrigerators, yielding a national stock estimate of 2,900,000. Together with the above information on the average annual energy consumption of thermoelectric refrigerators, DOE estimates national annual energy consumption of thermoelectric wine chillers to be 1.64 TWh.

However, the estimated saturation rate of thermoelectric refrigerators is uncertain, ranging from 1.1% to 3.8%. This uncertainty results in national stock estimates that range between 1,200,000 and 4,400,000, and national annual energy consumption estimates that range from 0.68 to 2.49 TWh.

DOE was unable to obtain data providing an estimate of the lifetime of thermoelectric refrigerators. Therefore, using the estimate of the lifetime of wine chillers described above (4.5 years) as a proxy, along with the central estimate of the national stock of thermoelectric refrigerators, DOE estimates annual sales of these products at 600,000 units.

[5] Similar to the analysis for vapor compression wine chillers discussed in section III.IV.B.IV.B.1, this usage factor assumes that the energy use associated with door openings is one-fifth of the closed-door energy use.

4. Absorption Refrigeration Products

This section provides an update to the estimates of energy use by residential thermoelectric refrigeration products that DOE provided in the November 2011 notice of proposed determination. *See* 76 FR at 69151.

The online survey data that DOE acquired from the study discussed in the previous sections provided no evidence indicating absorption-based wine chillers or other refrigeration products are used in homes. However, this technology is commonly used by the hotel industry. DOE estimated that the total stock of absorption refrigeration products in hotels, based on data from Dometic Corporation (a provider of specially-designed refrigerators for, among other things, the storage of wine), is approximately 400,000 units. (Dometic Group Company Presentation 2011–03–15, No. 7 at pp. 40, 42)

Information provided on manufacturer Web sites regarding absorption product energy use cited values between 207 and 730 kWh per year, but did not clarify which test procedures were used to determine these values and did not indicate the operating temperature ranges of the advertised products. (Dometic Screenshots, No. 8) However, DOE measured the energy use of a 1.4 cubic foot absorption refrigerator using closed-door tests in both 72 °F and 90 °F ambient temperature conditions. The unit was not able to maintain a 39 °F compartment temperature in the 90 °F condition. For the 72 °F condition, the unit was able to maintain a compartment temperature below 39 °F. Not including any usage factor adjustment, the measured energy use was 461 kWh. Applying a usage adjustment factor for door openings of 1.2, the projected field energy use of such a product would be 553 kWh. As discussed previously, this usage adjustment factor may be appropriate for wine chillers, but it is unclear whether it adequately accounts for door openings in refrigerators.

Together with the above energy use estimate, and assuming that the Dometic estimate represents the national stock of these units, DOE estimated national annual energy use of absorption refrigeration products to be 0.22 TWh.

DOE was unable to obtain data providing an estimate of the lifetime of absorption refrigeration products. Using the estimate of the lifetime of wine chillers described above (4.5 years) as a proxy, along with the above estimate of the national stock of absorption refrigeration products, DOE estimates annual sales of these products at 90,000 units.

5. Hybrid Refrigeration Products

For the purposes of this discussion, the term ''hybrid'' refers to any product that includes compartments designed for storage at warmer temperatures than fresh food compartments and that otherwise serves the functions of a refrigerator, refrigerator-freezer, or freezer. DOE conducted an online manufacturer model search for hybrid refrigeration products, and found a total of potentially up to 23 unique models, including 21 hybrid refrigerator-wine chillers (one manual defrost unit and 20 automatic defrost units) and two hybrid freezer-wine chillers. From these data, DOE determined that the average capacity of hybrid refrigerator-wine chillers was 7.4 cubic feet, and the average annual energy consumption of hybrid refrigerator-wine chillers was 415 kWh—these averages are based on the information provided for two units by manufacturer Web sites (Hybrid U-Line, No. 11 and Hybrid Vinotemp, No. 12, p. 2) and a third from the petition for waiver from the DOE test procedure of Sanyo E&E Corporation for a hybrid wine chiller/beverage center (77 FR 19654 (April 2, 2012)). For the two hybrid freezer-wine chiller models, the average unit capacity was 12.6 cubic feet, and the upper limit to the annual energy consumption was 413 kWh based on information provided for one unit by a manufacturer Web site.[6] (Hybrid Liebherr, No. 10, p. 1)

The online surveys from the study discussed in the previous sections provided market saturation data for hybrid refrigeration products found in U.S. households. Using these data, DOE found a saturation rate of 3.1% for hybrid refrigerator-wine chillers and 0.8% for hybrid freezer-wine chillers, yielding national stock estimates of 3,600,000 hybrid refrigerator-wine chillers and 900,000 hybrid freezer-wine chillers.

Together with the above information on the average annual energy consumption of hybrid refrigeration products, DOE estimates the national annual energy consumption of hybrid refrigerator-wine chillers to be 1.49 TWh, and of hybrid freezer-wine chillers to be 0.37 TWh.

DOE was unable to obtain data providing an estimate of the lifetime of hybrid refrigeration products. Using the estimated lifetimes of refrigerators (17 years) and freezers (22 years) from the 2011 Final Rule for Residential Refrigerators, Refrigerator-Freezers, and Freezers (76 FR 57516–57612) as proxies, along with the above estimate of the national stocks of hybrid refrigeration products, DOE estimates annual sales to be 200,000 hybrid refrigerator-wine chillers and 40,000 hybrid freezer-wine chillers.

6. Residential Ice Makers

DOE measured the energy use of a portable and a non-portable ice maker in typical room temperature conditions. The energy use of the portable ice maker was 139 kWh. This includes applying a 50% usage factor to account for the expectation that the unit would not be plugged in for the entire year. The energy use of the non-portable ice maker was 842 kWh. Both of these measurements incorporate energy use associated both with ice production and ice storage. In addition, the energy use associated with ice production is based on an estimated production amount of 4 pounds of ice per day. (For the portable ice maker, this estimate applies only during times when the unit is plugged in.)

DOE also acquired data on the numbers and types of residential ice makers found in U.S. households from the online surveys conducted as part of the study discussed in the previous sections. The data indicate that 69% of residential ice makers are portable units, with the remainder being non-portable built-in or freestanding units. Because data were unavailable on the fraction of the year when such portable units are plugged in and making ice, DOE estimated that the average annual usage factor was 50%. Using the data described above, DOE estimated that the average annual energy use of residential ice makers was 357 kWh.

The online surveys in the study provided information on the saturation of residential ice makers found in U.S. households. Using these data, DOE found a saturation rate of 4.6% for residential ice makers, yielding a national stock estimate of 5,500,000. Together with the above information on the average annual energy consumption of residential ice makers, DOE estimates the national energy consumption of residential ice makers to be 2.0 TWh per year.

However, both the estimated numbers and annual energy use of residential ice makers is uncertain. The estimated saturation rate ranges from 1.7% to

[6] The manufacturer (Liebherr) did not provide an annual energy use estimate for the freezer-cooled cabinet model (WF 1061: 4.5 cu. ft. cooled cabinet, 4.5 cu ft. freezer). However, information on a unit of comparable volume (BF 1061: 5.5 cu. ft. fresh food and 4.5 cu. ft. freezer) was available with an annual energy use estimate of 413 kWh/yr. This value was used as an upper limit to the energy consumption of the freezer-cooled cabinet model.

7.5%, resulting in a national stock estimate between 2,000,000 and 8,700,000. The uncertainty in annual energy use was estimated to be ±30%. Taken together, the range in estimated national annual energy consumption varies between 0.5 and 4.0 TWh.

Finally, the online surveys discussed in previous sections provided data on the age distribution of residential ice makers. From these data, DOE derived an estimate of the lifetime of residential ice makers of approximately 1.7 years. The online surveys discussed in previous sections provided information on the age distribution of wine chillers. From these data, DOE derived an estimate of the lifetime of wine chillers of approximately 4.5 years, which is comparable to the estimated lifetime of compact refrigerators of 5.6 years used in the 2011 Final Rule for Residential Refrigerators, Refrigerator-Freezers, and Freezers (76 FR 57516–57612). DOE believes that the derived lifetime of residential ice makers may be unrealistically low when compared to the estimated lifetimes of wine chillers and compact refrigerators, so it has adopted a range in its estimate of annual sales of these products by using the lifetime assumptions of both residential ice makers and wine chillers. Therefore, using the central value for the national stock of residential icemakers of 5,500,000 units and the aforementioned high and low values of product lifetime (1.7 years and 4.5 years, respectively), DOE estimates that annual sales of these products may range from 1,200,000 to 3,200,000 units.

7. Conclusions

Based upon its evaluations of vapor compression wine chillers, the three primary types of residential refrigeration products that do not incorporate a compressor (i.e. thermoelectric-based wine chillers, thermoelectric-based refrigerators and absorption-based refrigeration products), the hybrid refrigeration products described in this notice, and residential ice makers, DOE has been able to develop estimates of their annual energy use that indicate that these products on average consume significantly more than 100 kWh annually. Therefore, DOE has tentatively determined that the average annual per household energy use for miscellaneous residential refrigeration products is likely to exceed the 100 kWh threshold set by EPCA. Moreover, DOE has determined that the aggregate annual national energy use of these products is 9.9 TWh, which exceeds the 4.2 TWh minimum threshold set by EPCA in order to establish energy conservation standards for a product that the Secretary chooses to add for regulatory coverage.

V. Procedural Issues and Regulatory Review

DOE has reviewed its proposed determination of wine chillers and residential non-compressor refrigeration products under the following Executive Orders and acts.

A. Review Under Executive Order 12866

The Office of Management and Budget has determined that coverage determinations do not constitute ''significant regulatory actions'' under section 3(f) of Executive Order 12866, Regulatory Planning and Review, 58 FR 51735 (Oct. 4, 1993). Accordingly, this proposed action was not subject to review under the Executive Order by the Office of Information and Regulatory Affairs (OIRA) in the Office of Management and Budget (OMB).

B. Review Under the Regulatory Flexibility Act

The Regulatory Flexibility Act (5 U.S.C. 601 *et seq.,* as amended by the Small Business Regulatory Enforcement Fairness Act of 1996) requires preparation of an initial regulatory flexibility analysis for any rule that, by law, must be proposed for public comment, unless the agency certifies that the proposed rule, if promulgated, will not have a significant economic impact on a substantial number of small entities. A regulatory flexibility analysis examines the impact of the rule on small entities and considers alternative ways of reducing negative effects. Also, as required by E.O. 13272, ''Proper Consideration of Small Entities in Agency Rulemaking'' 67 FR 53461 (August 16, 2002), DOE published procedures and policies on February 19, 2003 to ensure that the potential impact of its rules on small entities are properly considered during the DOE rulemaking process. 68 FR 7990 (February 19, 2003). DOE makes its procedures and policies available on the Office of the General Counsel's Web site at *http://energy.gov/gc/office-general-counsel*.

DOE reviewed today's proposed determination under the provisions of the Regulatory Flexibility Act and the policies and procedures published on February 19, 2003. If adopted, today's proposed determination would set no standards; they would only positively determine that future standards may be warranted and should be explored in an energy conservation standards and test procedure rulemaking. Economic impacts on small entities would be considered in the context of such rulemakings. On the basis of the foregoing, DOE certifies that the proposed determination, if adopted, would have no significant economic impact on a substantial number of small entities. Accordingly, DOE has not prepared a regulatory flexibility analysis for this proposed determination. DOE will transmit this certification and supporting statement of factual basis to the Chief Counsel for Advocacy of the Small Business Administration for review under 5 U.S.C. 605(b).

C. Review Under the Paperwork Reduction Act of 1995

This proposed determination that miscellaneous residential refrigeration products meet the criteria for covered products for which the Secretary may prescribe energy conservation standards pursuant to 42 U.S.C. 6295(o) and (p) will impose no new information or record-keeping requirements. Accordingly, Office of Management and Budget (OMB) clearance is not required under the Paperwork Reduction Act. (44 U.S.C. 3501, *et seq.*)

D. Review Under the National Environmental Policy Act of 1969

In this notice, DOE proposes to positively determine that future standards may be warranted and that environmental impacts should be explored in an energy conservation standards rulemaking. DOE has determined that review under the National Environmental Policy Act of 1969 (NEPA), Public Law 91–190, codified at 42 U.S.C. 4321, *et seq.* is not required at this time. NEPA review can only be initiated ''as soon as environmental impacts can be meaningfully evaluated'' (10 CFR 1021.213(b)). This proposed determination would only determine that future standards may be warranted, but would not itself propose to set any specific standard. DOE has, therefore, determined that there are no environmental impacts to be evaluated at this time. Accordingly, neither an environmental assessment nor an environmental impact statement is required.

E. Review Under Executive Order 13132

Executive Order (E.O.) 13132, ''Federalism'' 64 FR 43255 (August 10, 1999), imposes certain requirements on agencies formulating and implementing policies or regulations that preempt State law or that have Federalism implications. The Executive Order requires agencies to examine the constitutional and statutory authority supporting any action that would limit the policymaking discretion of the States and to assess carefully the

necessity for such actions. The Executive Order also requires agencies to have an accountable process to ensure meaningful and timely input by State and local officials in developing regulatory policies that have Federalism implications. On March 14, 2000, DOE published a statement of policy describing the intergovernmental consultation process that it will follow in developing such regulations. 65 FR 13735 (March 14, 2000). DOE has examined today's proposed determination and concludes that it would not preempt State law or have substantial direct effects on the States, on the relationship between the Federal government and the States, or on the distribution of power and responsibilities among the various levels of government. DOE notes, however, that if the agency determines that the products at issue in today's notice are covered and energy conservation standards are subsequently promulgated for these products, any existing State standards would be preempted by EPCA. EPCA governs and prescribes Federal preemption of State regulations as to energy conservation for the product that is the subject of today's proposed determination. States can petition DOE for exemption from such preemption to the extent permitted, and based on criteria, set forth in EPCA. (42 U.S.C. 6297) No further action is required by E.O. 13132.

F. Review Under Executive Order 12988

With respect to the review of existing regulations and the promulgation of new regulations, section 3(a) of E.O. 12988, ''Civil Justice Reform,'' 61 FR 4729 (February 7, 1996), imposes on Federal agencies the duty to: (1) Eliminate drafting errors and ambiguity; (2) write regulations to minimize litigation; (3) provide a clear legal standard for affected conduct rather than a general standard; and (4) promote simplification and burden reduction. Section 3(b) of E.O. 12988 specifically requires that Executive agencies make every reasonable effort to ensure that the regulation specifies the following: (1) The preemptive effect, if any; (2) any effect on existing Federal law or regulation; (3) a clear legal standard for affected conduct while promoting simplification and burden reduction; (4) the retroactive effect, if any; (5) definitions of key terms; and (6) other important issues affecting clarity and general draftsmanship under any guidelines issued by the Attorney General. Section 3(c) of E.O. 12988 requires Executive agencies to review regulations in light of applicable standards in sections 3(a) and 3(b) to determine whether these standards are met, or whether it is unreasonable to meet one or more of them. DOE completed the required review and determined that, to the extent permitted by law, this proposed determination meets the relevant standards of E.O. 12988.

G. Review Under the Unfunded Mandates Reform Act of 1995

Title II of the Unfunded Mandates Reform Act of 1995 (UMRA) (Pub. L. 104–4, codified at 2 U.S.C. 1501 *et seq.*) requires each Federal agency to assess the effects of Federal regulatory actions on State, local, and tribal governments and the private sector. For regulatory actions likely to result in a rule that may cause expenditures by State, local, and Tribal governments, in the aggregate, or by the private sector of $100 million or more in any one year (adjusted annually for inflation), section 202 of UMRA requires a Federal agency to publish a written statement that estimates the resulting costs, benefits, and other effects on the national economy. (2 U.S.C. 1532(a) and (b)) UMRA requires a Federal agency to develop an effective process to permit timely input by elected officers of State, local, and tribal governments on a proposed ''significant intergovernmental mandate.'' UMRA also requires an agency plan for giving notice and opportunity for timely input to small governments that may be potentially affected before establishing any requirement that might significantly or uniquely affect them. On March 18, 1997, DOE published a statement of policy on its process for intergovernmental consultation under UMRA. 62 FR 12820 (March 18, 1997). (This policy also is available at *http://energy.gov/gc/office-general-counsel.*) DOE reviewed today's proposed determination pursuant to these existing authorities and its policy statement and determined that the proposed determination contains neither an intergovernmental mandate nor a mandate that may result in the expenditure of $100 million or more in any year, so the UMRA requirements do not apply.

H. Review Under the Treasury and General Government Appropriations Act of 1999

Section 654 of the Treasury and General Government Appropriations Act of 1999 (Pub. L. 105–277) requires Federal agencies to issue a Family Policymaking Assessment for any rule that may affect family well-being. This proposed determination would not have any impact on the autonomy or integrity of the family as an institution. Accordingly, DOE has concluded that it is not necessary to prepare a Family Policymaking Assessment.

I. Review Under Executive Order 12630

Pursuant to E.O. 12630, ''Governmental Actions and Interference with Constitutionally Protected Property Rights'' 53 FR 8859 (March 15, 1988), DOE determined that this proposed determination would not result in any takings that might require compensation under the Fifth Amendment to the U.S. Constitution.

J. Review Under the Treasury and General Government Appropriations Act of 2001

The Treasury and General Government Appropriation Act of 2001 (44 U.S.C. 3516, note) requires agencies to review most disseminations of information they make to the public under guidelines established by each agency pursuant to general guidelines issued by the Office of Management and Budget (OMB). The OMB's guidelines were published at 67 FR 8452 (February 22, 2002), and DOE's guidelines were published at 67 FR 62446 (October 7, 2002). DOE has reviewed today's proposed determination under the OMB and DOE guidelines and has concluded that it is consistent with the applicable policies in those guidelines.

K. Review Under Executive Order 13211

E.O. 13211, ''Actions Concerning Regulations That Significantly Affect Energy Supply, Distribution, or Use,'' 66 FR 28355 (May 22, 2001), requires Federal agencies to prepare and submit to OMB a Statement of Energy Effects for any proposed significant energy action. A ''significant energy action'' is defined as any action by an agency that promulgates a final rule or is expected to lead to promulgation of a final rule, and that: (1) Is a significant regulatory action under E.O. 12866, or any successor order; and (2) is likely to have a significant adverse effect on the supply, distribution, or use of energy; or (3) is designated by the Administrator of the Office of Information and Regulatory Affairs (OIRA) as a significant energy action. For any proposed significant energy action, the agency must give a detailed statement of any adverse effects on energy supply, distribution, or use if the proposal is implemented, and of reasonable alternatives to the proposed action and their expected benefits on energy supply, distribution, and use.

DOE has concluded that today's regulatory action proposing to determine that miscellaneous residential refrigeration products meet the criteria for covered products for

which the Secretary may prescribe energy conservation standards pursuant to 42 U.S.C. 6295(o) and (p) would not have a significant adverse effect on the supply, distribution, or use of energy. This action is also not a significant regulatory action for purposes of E.O. 12866, and the OIRA Administrator has not designated this proposed determination as a significant energy action. Therefore, this proposed determination is not a significant energy action. Accordingly, DOE has not prepared a Statement of Energy Effects for this proposed determination.

L. Review Under the Information Quality Bulletin for Peer Review

On December 16, 2004, OMB, in consultation with the Office of Science and Technology Policy (OSTP), issued its Final Information Quality Bulletin for Peer Review (the Bulletin). 70 FR 2664 (January 14, 2005). The Bulletin establishes that certain scientific information shall be peer reviewed by qualified specialists before it is disseminated by the Federal government, including influential scientific information related to agency regulatory actions. The purpose of the Bulletin is to enhance the quality and credibility of the Government's scientific information. DOE has determined that the analyses conducted for this rulemaking do not constitute ''influential scientific information,'' which the Bulletin defines as ''scientific information the agency reasonably can determine will have or does have a clear and substantial impact on important public policies or private sector decisions.'' 70 FR 2667 (January 14, 2005). The analyses were subject to pre-dissemination review prior to issuance of this notice.

DOE will determine the appropriate level of review that would be applicable to any future rulemaking to establish energy conservation standards for miscellaneous residential refrigeration products.

VI. Public Participation

A. Submission of Comments

DOE will accept comments, data, and information regarding this notice of proposed determination no later than the date provided at the beginning of this notice. After the close of the comment period, DOE will review the comments received and determine whether miscellaneous residential refrigeration products are covered products under EPCA.

Comments, data, and information submitted to DOE's email address for this proposed determination should be provided in WordPerfect, Microsoft Word, PDF, or text (ASCII) file format. Submissions should avoid the use of special characters or any form of encryption, and wherever possible comments should include the electronic signature of the author. No telefacsimiles (faxes) will be accepted.

According to 10 CFR 1004.11, any person submitting information that he or she believes to be confidential and exempt by law from public disclosure should submit two copies: one copy of the document should have all the information believed to be confidential deleted. DOE will make its own determination as to the confidential status of the information and treat it according to its determination.

Factors of interest to DOE when evaluating requests to treat submitted information as confidential include (1) A description of the items; (2) whether and why such items are customarily treated as confidential within the industry; (3) whether the information is generally known or available from public sources; (4) whether the information has previously been made available to others without obligations concerning its confidentiality; (5) an explanation of the competitive injury to the submitting persons which would result from public disclosure; (6) a date after which such information might no longer be considered confidential; and (7) why disclosure of the information would be contrary to the public interest.

B. Issues on Which DOE Seeks Comments

DOE welcomes comments on all aspects of this proposed determination. DOE is particularly interested in receiving comments from interested parties on the following issues related to the proposed determination for miscellaneous residential refrigeration products:

(1) Is the proposed scope of coverage for miscellaneous residential refrigeration products sufficient or are there aspects to this proposed scope that require modification?

(2) DOE seeks information on the types of vapor compression and non-compressor residential refrigeration products currently being marketed that would be addressed by the coverage proposed in this notice, particularly whether such products are distributed to any significant extent for uses other than as wine or beverage chillers.

(3) DOE seeks stock and shipment data for residential wine chillers cooled by vapor compression and for residential refrigeration products that do not incorporate a compressor, segregated by different product types, including any details regarding trends in shipments for each respective type of product.

(4) DOE seeks information regarding energy test procedures suited for residential wine chillers cooled by vapor compression and for residential refrigeration products that do not incorporate a compressor.

(5) DOE seeks information regarding the energy use of all of the different products that would be affected by today's proposed coverage determination.

(6) DOE seeks calculations and accompanying values for household and national energy consumption of the products that would be affected by today's notice of proposed coverage determination.

(7) DOE seeks information as to what technologies, if any, would be available to improve the energy efficiency of residential vapor compression wine chillers, residential refrigeration products that do not incorporate a compressor, and residential ice makers. To the extent that no technologies are readily available to improve the efficiency of these products, DOE seeks information on the factors that may be limiting the development of those technologies.

(8) DOE seeks information regarding the factors that would cause a manufacturer to select a cooling technology other than vapor compression for a residential refrigeration product, including design and production costs, energy use, product performance, consumer acceptance, and any other relevant factors.

(9) DOE seeks information, including supporting data, regarding whether labeling-related efforts applied to the residential refrigeration products addressed in today's notice would be sufficient to induce manufacturers to produce and consumers and other persons to purchase, residential refrigeration products that achieve the minimum energy efficiency that is technologically feasible and economically justified.

The Department is interested in receiving views concerning other relevant issues that participants believe would affect DOE's ability to establish test procedures and energy conservation standards for miscellaneous residential refrigeration products. The Department invites all interested parties to submit in writing by December 2, 2013, comments and information on matters addressed in this notice and on other matters relevant to consideration of a determination for miscellaneous residential refrigeration products.

After the expiration of the period for submitting written statements, the Department will consider all comments and additional information that is obtained from interested parties or through further analyses, and it will prepare a final determination. If DOE determines that miscellaneous residential refrigeration products qualify as covered products, DOE will consider initiating rulemakings to develop test procedures and energy conservation standards for miscellaneous residential refrigeration products. Members of the public will be given an opportunity to submit written and oral comments on any proposed test procedure and standards.

List of Subjects in 10 CFR part 430

Administrative practice and procedure, Confidential business information, Energy conservation, Reporting and recordkeeping requirements.

Issued in Washington, DC, on September 30, 2013.

Kathleen B. Hogan,

Deputy Assistant Secretary for Energy Efficiency and Renewable Energy.

[FR Doc. 2013–25943 Filed 10–30–13; 8:45 am]

BILLING CODE 6450–01–P

DEPARTMENT OF TRANSPORTATION

Federal Aviation Administration

14 CFR Part 25

[Docket No. FAA–2013–0819; Notice No. 25–13–06–SC]

Special Conditions: Bombardier Inc., Models BD–500–1A10 and BD–500–1A11 series airplanes; Fuselage In-Flight Fire Safety and Flammability Resistance

AGENCY: Federal Aviation Administration (FAA), DOT.

ACTION: Notice of proposed special conditions.

SUMMARY: This action proposes special conditions for the Bombardier Inc. Model BD–500–1A10 and BD–500–1A11 series airplanes. These airplanes will have a novel or unusual design feature associated with the materials used to fabricate the fuselage, which may affect fire propagation during an in-flight fire. The applicable airworthiness regulations do not contain adequate or appropriate safety standards for this design feature. These proposed special conditions contain the additional safety standards that the Administrator considers necessary to establish a level of safety equivalent to that established by the existing airworthiness standards.

DATES: Send your comments on or before December 16, 2013.

ADDRESSES: Send comments identified by docket number [FAA–2013–0819] using any of the following methods:

- *Federal eRegulations Portal:* Go to *http://www.regulations.gov/* and follow the online instructions for sending your comments electronically.
- *Mail:* Send comments to Docket Operations, M–30, U.S. Department of Transportation (DOT), 1200 New Jersey Avenue SE., Room W12–140, West Building Ground Floor, Washington, DC 20590–0001.
- *Hand Delivery or Courier:* Take comments to Docket Operations in Room W12–140 of the West Building Ground Floor at 1200 New Jersey Avenue SE., Washington, DC, between 8 a.m. and 5 p.m., Monday through Friday, except federal holidays.
- *Fax:* Fax comments to Docket Operations at 202–493–2251.

Privacy: The FAA will post all comments it receives, without change, to *http://www.regulations.gov/,* including any personal information the commenter provides. Using the search function of the docket Web site, anyone can find and read the electronic form of all comments received into any FAA docket, including the name of the individual sending the comment (or signing the comment for an association, business, labor union, etc.). DOT's complete Privacy Act Statement can be found in the **Federal Register** published on April 11, 2000 (65 FR 19477–19478), as well as at *http://DocketsInfo.dot.gov/*.

Docket: Background documents or comments received may be read at *http://www.regulations.gov/* at any time. Follow the online instructions for accessing the docket or go to the Docket Operations in Room W12–140 of the West Building Ground Floor at 1200 New Jersey Avenue SE., Washington, DC, between 9 a.m. and 5 p.m., Monday through Friday, except federal holidays.

FOR FURTHER INFORMATION CONTACT: Alan Sinclair, FAA, Airframe and Cabin Safety Branch, ANM–115, Transport Airplane Directorate, Aircraft Certification Service, 1601 Lind Avenue SW., Renton, Washington, 98057–3356; telephone 425–227–2195; facsimile 425–227–1232.

SUPPLEMENTARY INFORMATION:

Comments Invited

We invite interested people to take part in this rulemaking by sending written comments, data, or views. The most helpful comments reference a specific portion of the special conditions, explain the reason for any recommended change, and include supporting data.

We will consider all comments we receive on or before the closing date for comments. We may change these special conditions based on the comments we receive.

Background

On December 10, 2009, Bombardier Inc. applied for a type certificate for their new Model BD–500–1A10 and BD–500–1A11 series airplanes. The Model BD–500–1A10 and BD–500–1A11 series airplanes are swept-wing monoplanes with pressurized cabins, and they share an identical supplier base and significant common design elements. The fuselages are aluminum alloy material, blended double-bubble design, sized for nominal 5 abreast seating. Each airplane's powerplant includes two under-wing Pratt and Whitney PW1524G ultra-high bypass, geared turbofan engines. Flight controls are fly-by-wire flight with two passive/uncoupled side sticks. Avionics include five landscape primary cockpit displays. The dimension of the airplanes encompasses a wingspan of 115 feet; a height of 37.75 feet; and a length of 114.75 feet for the Model BD–500–1A10 and 127 feet for the Model BD–500–1A11. Passenger capacity is designated as 110 for the Model BD–500–1A10 and 125 for the Model BD–500–1A11. Maximum takeoff weight is 131,000 pounds for the Model BD–500–1A10 and 144,000 pounds for the Model BD–500–1A11. Maximum takeoff thrust is 21,000 pounds for the Model BD–500–1A10 and 23,300 pounds for the Model BD–500–1A11. The range is 3,394 miles (5,463 kilometers) for both model airplanes. The maximum operating altitude is 41,000 feet for both model airplanes.

The Bombardier BD–500–1A10 and BD–500–1A11 series airplanes will be fabricated using aluminum-lithium materials. The performance of airplanes consisting of a conventional aluminum fuselage in an inaccessible in-flight fire scenario is understood based on service history and extensive intermediate and large-scale fire testing. The fuselage itself does not contribute to in-flight fire propagation. This may not be the case for an all-aluminum-lithium fuselage. Experience has shown that eliminating the fire propagation of the interior materials and insulation materials tends to increase survivability since other aspects of in-flight fire safety (e.g., toxic gas emission and smoke obscuration) are typically by-products of the propagating fire. The Bombardier BD–

500–1A10 and BD–500–1A11 series airplanes must provide protection against an in-flight fire propagating along the surface of the fuselage.

Type Certification Basis

Under the provisions of Title 14, Code of Federal Regulations (14 CFR) 21.17, Bombardier Inc. must show that the Model BD–500–1A10 and BD–500–1A11 series airplanes meet the applicable provisions of part 25 as amended by Amendments 25–1 through 25–129 thereto.

If the Administrator finds that the applicable airworthiness regulations (i.e., 14 CFR part 25) do not contain adequate or appropriate safety standards for the Model BD–500–1A10 and BD–500–1A11 series airplanes because of a novel or unusual design feature, special conditions are prescribed under the provisions of § 21.16.

Special conditions are initially applicable to the model for which they are issued. Should the type certificate for that model be amended later to include any other model that incorporates the same or similar novel or unusual design feature, the special conditions would also apply to the other model under § 21.101.

In addition to the applicable airworthiness regulations and special conditions, the Model BD–500–1A10 and BD–500–1A11 series airplanes must comply with the fuel vent and exhaust emission requirements of 14 CFR part 34 and the noise certification requirements of 14 CFR part 36 and the FAA must issue a finding of regulatory adequacy under § 611 of Public Law 92–574, the ''Noise Control Act of 1972.''

The FAA issues special conditions, as defined in 14 CFR 11.19, in accordance with § 11.38, and they become part of the type-certification basis under § 21.17(a)(2).

Novel or Unusual Design Features

The Model BD–500–1A10 and BD–500–1A11 series airplanes will incorporate the following novel or unusual design features: The fuselage will be fabricated using aluminum-lithium materials instead of conventional aluminum. This new type of material must provide protection against an in-flight fire propagating along the surface of the fuselage.

Discussion

The Bombardier BD–500–1A10 and BD–500–1A11 series airplanes will be fabricated using aluminum-lithium materials. The performance of airplanes consisting of a conventional aluminum fuselage in an inaccessible in-flight fire scenario is understood based on service history and extensive intermediate and large-scale fire testing. Experience has shown that eliminating the fire propagation of the interior materials and insulation materials tends to increase survivability since other aspects of in-flight fire safety (e.g., toxic gas emission and smoke obscuration) are typically by-products of the propagating fire. The fuselage itself does not contribute to in-flight fire propagation. This may not be the case for an all-aluminum-lithium fuselage.

In the past, fatal in-flight fires have originated in inaccessible areas of the airplane where thermal/acoustic insulation located adjacent to the aluminum airplane skin has been the path for flame propagation and fire growth. Concern over the fire performance of thermal/acoustic insulation was initially raised by five incidents in the 1990's, which revealed unexpected flame spread along the insulation film that covered the thermal/acoustic insulation. In all cases, the ignition source was relatively modest and, in most cases, was electrical in origin (e.g., electrical short circuit, arcing caused by chafed wiring, ruptured ballast case).

In 1996, the FAA Technical Center began a program to develop new fire test criteria for insulation films directly relating to in-flight fire resistance. The current test standard at that time was evaluated as well as another small-scale test method that has been used by airplane manufacturers to evaluate flame propagation on thermal/acoustic insulation materials.

An inter-laboratory comparison of these methods revealed a number of deficiencies. A new test method subjecting a material to a pilot flame while the material is heated by a radiant panel was developed. The new radiant panel test method and criteria were specifically established to improve the evaluation of the in-flight fire ignition/flame propagation of thermal/acoustic insulation materials based on real-world fire scenarios. While these tests were developed for thermal/acoustic insulation materials, this same type of test methodology can be used to assess the flammability characteristics of the proposed aluminum-lithium material for the fuselage.

The FAA reviewed the test method proposed by Bombardier Inc. and determined that a larger flame and test article would be necessary to make a determination of the potential flammability of the aluminum-lithium material. It would also be more representative of a real-life fire scenario.

The FAA recently conducted additional testing in our Components Fire Test facility and determined that another way to assess the survivability within the cabin of the Model BD–500–1A10 and BD–500–1A11 series is to use the cargo liner flammability test (part III of appendix F to part 25, *Test Method to Determine Flame Penetration Resistance of Cargo Compartment Liners*). However, the problem with using this particular test is that when the aluminum panels melt, molten globs of aluminum fall directly into the burner, which adversely affects the flame. So the FAA decided that a similar test for the measurement of insulation burnthrough resistance could be used (part VII of appendix F to part 25, *Test Method to Determine the Burnthrough Resistance of Thermal/Acoustic Insulation Materials*). Although this test method uses the same burner as the cargo liner test, it uses a slightly larger flame. In addition, the burner is not vertical, so there was no problem with molten material falling into it, requiring disassembly of the burner. The only slight change was the size of the sample and the sample holder. These were modified slightly to accommodate the samples that we received.

The recent FAA tests that were conducted in our Components Fire Test facility used a 6 gallon/hour oil burner, the same apparatus used to determine burnthrough resistance of thermal/acoustic insulation (part VII of appendix F to part 25). The test used 16 by 24 inch Al-Li panels that were installed into a sheet steel subframe, which measured 18 by 32 inches (outside dimensions). The subframe had an opening cut into it, which measured 14.5 by 22.5 inches; this allowed the test panels to be mounted onto the subframe using .250–20 UNC threaded bolts.

The FAA proposes that Bombardier use the test method contained in part VII of appendix F to part 25, *Test Method to Determine the Burnthrough Resistance of Thermal/Acoustic Insulation Materials,* with the slight changes to the sample size and sample holder as an alternate test method to show compliance with applicable requirements. Bombardier Inc. is responsible for finding a suitable testing facility in which to conduct the testing.

Applicability

As discussed above, these special conditions are applicable to the Model BD–500–1A10 and BD–500–1A11 airplanes. Should Bombardier Inc. apply at a later date for a change to the type certificate to include another model incorporating the same novel or unusual design feature, the special conditions would apply to that model as well.

Conclusion

This action affects only certain novel or unusual design features on two models of airplanes. It is not a rule of general applicability.

List of Subjects in 14 CFR Part 25

Aircraft, Aviation safety, Reporting and recordkeeping requirements.

The authority citation for these special conditions is as follows:

Authority: 49 U.S.C. 106(g), 40113, 44701, 44702, 44704.

The Proposed Special Conditions

Accordingly, the Federal Aviation Administration (FAA) proposes the following special conditions as part of the type certification basis for Bombardier Inc. Model BD–500–1A10 and BD–500–1A11 series airplanes.

1. *Fuselage In-Flight Fire Safety and Flammability Resistance.* Bombardier must demonstrate that the fuselage would not materially contribute to the propagation of an in-flight fire or introduce any additional in-flight fire risk.

2. To demonstrate compliance, the test set-up and methodology must be commensurate with 14 CFR part 25, appendix F, part VII, except the size of the test samples, modifications to the sample holder, and the test methodology would be varied as described below.

3. In demonstrating that the aluminum-lithium material used to fabricate the fuselage has equal or better flammability resistance characteristics than the aluminum alloy sheet typically used as skin material on similar airplanes, the accepted test methods for compliance include:

a. Each test sample must consist of a flat test specimen. A set of three samples of the material must be tested. The size of each sample must be 16 inches by 24 inches by 0.063 inches.

b. The test samples must be installed into a steel sheet subframe with outside dimensions of 18 inches by 32 inches. The subframe must have an opening cut into it of 14.5 inches by 22.5 inches. The tests samples must be mounted onto the subframe using .250–20 UNC threaded bolts.

c. Test specimens must be conditioned at 70 °F ± 5 °F and 55 percent ± 5 percent humidity for at least 24 hours before testing.

4. Demonstration of compliance will be achieved if the material is not ignited during any of the tests.

Issued in Renton, Washington, on September 12, 2013.

Jeffrey E. Duven,

Acting Manager, Transport Airplane Directorate, Aircraft Certification Service.

[FR Doc. 2013–25663 Filed 10–30–13; 8:45 am]

BILLING CODE 4910–13–P

DEPARTMENT OF TRANSPORTATION

Federal Aviation Administration

14 CFR Part 25

[Docket No. FAA–2013–0858; Notice No. 25–13–09–SC]

Special Conditions: Bombardier Inc., Models BD–500–1A10 and BD–500–1A11 Series Airplanes; Fuselage Post-Crash Fire Survivability

AGENCY: Federal Aviation Administration (FAA), DOT.

ACTION: Notice of proposed special conditions.

SUMMARY: This action proposes special conditions for the Bombardier Inc. Models BD–500–1A10 and BD–500–1A11 series airplanes. These airplanes will have a novel or unusual design feature associated with aluminum-lithium fuselage construction that may provide different levels of protection from post-crash fire threats than similar aircraft constructed from traditional aluminum structure. The applicable airworthiness regulations do not contain adequate or appropriate safety standards for this design feature. These proposed special conditions contain the additional safety standards that the Administrator considers necessary to establish a level of safety equivalent to that established by the existing airworthiness standards.

DATES: Send your comments on or before December 16, 2013.

ADDRESSES: Send comments identified by docket number FAA–2013–0858 using any of the following methods:

- *Federal eRegulations Portal:* Go to *http://www.regulations.gov/* and follow the online instructions for sending your comments electronically.
- *Mail:* Send comments to Docket Operations, M–30, U.S. Department of Transportation (DOT), 1200 New Jersey Avenue SE., Room W12–140, West Building Ground Floor, Washington, DC 20590–0001.
- *Hand Delivery or Courier:* Take comments to Docket Operations in Room W12–140 of the West Building Ground Floor at 1200 New Jersey Avenue SE., Washington, DC, between 9 a.m. and 5 p.m., Monday through Friday, except federal holidays.
- *Fax:* Fax comments to Docket Operations at 202–493–2251.

Privacy: The FAA will post all comments it receives, without change, to *http://www.regulations.gov/,* including any personal information the commenter provides. Using the search function of the docket Web site, anyone can find and read the electronic form of all comments received into any FAA docket, including the name of the individual sending the comment (or signing the comment for an association, business, labor union, etc.). DOT's complete Privacy Act Statement can be found in the **Federal Register** published on April 11, 2000 (65 FR 19477–19478), as well as at *http://DocketsInfo.dot.gov/.*

Docket: Background documents or comments received may be read at *http://www.regulations.gov/* at any time. Follow the online instructions for accessing the docket or go to the Docket Operations in Room W12–140 of the West Building Ground Floor at 1200 New Jersey Avenue SE., Washington, DC, between 9 a.m. and 5 p.m., Monday through Friday, except federal holidays.

FOR FURTHER INFORMATION CONTACT: Alan Sinclair, FAA, Airframe and Cabin Safety Branch, ANM–115 Transport Airplane Directorate, Aircraft Certification Service, 1601 Lind Avenue SW., Renton, Washington 98057–3356; telephone 425–227–2195; facsimile 425–227–1232.

SUPPLEMENTARY INFORMATION:

Comments Invited

We invite interested people to take part in this rulemaking by sending written comments, data, or views. The most helpful comments reference a specific portion of the special conditions, explain the reason for any recommended change, and include supporting data.

We will consider all comments we receive on or before the closing date for comments. We may change these special conditions based on the comments we receive.

Background

On December 10, 2009, Bombardier Inc. applied for a type certificate for their new Models BD–500–1A10 and BD–500–1A11 series airplanes (hereafter collectively referred to as ''C-series''). The C-series airplanes are swept-wing monoplanes with a pressurized cabin. They share an identical supplier base and significant common design elements. The fuselage is an aluminum alloy material, blended double-bubble design, sized for nominal 5-abreast seating. Each airplane's powerplant

consists of two under wing Pratt and Whitney PW1524G ultra-high bypass, geared turbofan engines. Flight controls are fly-by-wire systems with two passive/uncoupled side sticks. Avionics include five landscape primary cockpit displays. The dimensions of the airplanes encompass a wingspan of 115 feet; a height of 37.75 feet; and a length of 114.75 feet for the Model BD–500–1A10 and 127 feet for the Model BD–500–1A11. Passenger capacity is designated as 110 for the Model BD–500–1A10 and 125 for the Model BD–500–1A11. Maximum takeoff weight is 131,000 pounds for the Model BD–500–1A10 and 144,000 pounds for the Model BD–500–1A11. Maximum takeoff thrust is 21,000 pounds for the Model BD–500–1A10 and 23,300 pounds for the Model BD–500–1A11. Range is 3,394 miles (5,463 kilometers) for both models of airplanes. Maximum operating altitude is 41,000 feet for both models of airplanes.

The fuselage of the Bombardier C-series airplanes will be fabricated using aluminum-lithium construction. Structure fabricated from aluminum-lithium may provide different levels of protection from post-crash fuel-fed fire threats than similar aircraft constructed from traditional aluminum structure.

There are no existing regulations that adequately ensure that aluminum-lithium structure offers passengers the same protection from a post-crash fire condition as would a conventional aluminum structure. These proposed special conditions are necessary to ensure that the Bombardier C-series airplanes provide a level of safety equivalent to that provided by Title 14, Code of Federal Regulations (14 CFR) part 25.

Type Certification Basis

Under the provisions of 14 CFR 21.17, Bombardier Inc. must show that the C-series airplanes meet the applicable provisions of part 25 as amended by Amendments 25–1 through 25–129 thereto.

If the Administrator finds that the applicable airworthiness regulations (i.e., 14 CFR part 25) do not contain adequate or appropriate safety standards for the C-series airplanes because of a novel or unusual design feature, special conditions are prescribed under the provisions of § 21.16.

Special conditions are initially applicable to the model for which they are issued. Should the type certificate for that model be amended later to include any other model that incorporates the same or similar novel or unusual design feature, the special conditions would also apply to the other model under § 21.101.

In addition to the applicable airworthiness regulations and special conditions, the C-series airplanes must comply with the fuel vent and exhaust emission requirements of 14 CFR part 34 and the noise certification requirements of 14 CFR part 36, and the FAA must issue a finding of regulatory adequacy under § 611 of Public Law 92–574, the ''Noise Control Act of 1972.''

The FAA issues special conditions, as defined in 14 CFR 11.19, in accordance with § 11.38, and they become part of the type-certification basis under § 21.17(a)(2).

Novel or Unusual Design Features

The Bombardier C-series airplanes will incorporate the following novel or unusual design features: The fuselage will be fabricated using aluminum-lithium materials instead of conventional aluminum.

The performance of airplanes consisting of a conventional aluminum fuselage is understood based on service history and extensive intermediate and large-scale fire testing. The new aluminum-lithium materials must provide the same levels of protection against post-crash fuel-fed fire threats.

Discussion

The certification basis for the Bombardier C-series airplanes includes meeting the burn-through requirements defined in § 25.856(b). The Bombardier C-series airplanes are introducing a new material from what has traditionally been shown to be survivable from a toxic standpoint. Toxicity levels from post-crash fire threats are typically more severe than threats generated from an in-flight fire with regards to the quantity level of toxins produced by off-gases from burning materials. Therefore, it is necessary to ensure that the material being used does not introduce a new hazard that would reduce the survivability of the passengers during a post-crash situation, or provide levels of toxic fumes that would be lethal or incapacitating, thus preventing evacuation of the aircraft in a crash scenario.

Bombardier Inc. will have to demonstrate that aluminum-lithium material does not produce levels of toxic fumes that will reduce the survivability of the passengers or their ability to evacuate when compared to typically constructed aluminum airplanes.

A way of showing acceptable capability is to conduct a laboratory-scale test to assess the survivability characteristics of this non-traditional fuselage material. If negligible amounts of combustion products are produced in this test, the material can be considered acceptable with respect to post crash survivability. A test method developed by the FAA's William J. Hughes Technical Center should be utilized (Ref. DOT/FAA/AR–TN07/15 dated August 2008).

Related regulations, including §§ 25.853 and 25.856(a), remain valid for this airplane, but they do not reflect the potential threat generated from toxic levels of gases produced from aluminum-lithium materials.

Applicability

As discussed above, these special conditions are applicable to the Model BD–500–1A10 and BD–500–1A11 series airplanes. Should Bombardier Inc. apply at a later date for a change to the type certificate to include another model incorporating the same novel or unusual design feature, the special conditions would apply to that model as well.

Conclusion

This action affects only certain novel or unusual design features on two model series of airplanes. It is not a rule of general applicability.

List of Subjects in 14 CFR Part 25

Aircraft, Aviation safety, Reporting and recordkeeping requirements.

The authority citation for these special conditions is as follows:

Authority: 49 U.S.C. 106(g), 40113, 44701, 44702, 44704.

The Proposed Special Conditions

Accordingly, the Federal Aviation Administration (FAA) proposes the following special conditions as part of the type certification basis for Bombardier Inc. Model BD–500–1A10 and BD–500–1A11 (C-series) airplanes.

The Bombardier C-series airplanes must show that any toxic levels of gases produced from the aluminum-lithium material are in no way an additional threat to the passengers and their ability to evacuate when compared to a typically constructed aluminum airplane exposed to a post-crash fuel-fed fire.

Issued in Renton, Washington, on September 19, 2013.

Ross Landes,

Acting Manager, Transport Airplane Directorate, Aircraft Certification Service.

[FR Doc. 2013–25843 Filed 10–30–13; 8:45 am]

BILLING CODE 4910–13–P

DEPARTMENT OF TRANSPORTATION

Federal Aviation Administration

14 CFR Part 25

[Docket No. FAA–2013–0857; Notice No. 25–13–08–SC]

Special Conditions: Learjet Inc., Model LJ–200–1A10 Airplane; Crashworthiness, Emergency Landing Conditions

AGENCY: Federal Aviation Administration (FAA), DOT.

ACTION: Notice of proposed special conditions.

SUMMARY: This action proposes special conditions for the Learjet Model LJ–200–1A10 airplane. This airplane will have novel or unusual design features when compared to the state of technology envisioned in the airworthiness standards for transport category airplanes. These features are associated with a hybrid construction that uses both composite and metallic materials in the structure for which the crashworthiness responses for occupant safety may not be equivalent to current all-metallic airplanes. The applicable airworthiness regulations do not contain adequate or appropriate safety standards for the crashworthiness of this design feature. These proposed special conditions contain the additional safety standards that the Administrator considers necessary to establish a level of safety equivalent to that established by the existing airworthiness standards.

DATES: Send your comments on or before December 16, 2013.

ADDRESSES: Send comments identified by docket number FAA–2013–0857 using any of the following methods:

- *Federal eRegulations Portal:* Go to *http://www.regulations.gov/* and follow the online instructions for sending your comments electronically.
- *Mail:* Send comments to Docket Operations, M–30, U.S. Department of Transportation (DOT), 1200 New Jersey Avenue SE., Room W12–140, West Building Ground Floor, Washington, DC 20590–0001.
- *Hand Delivery or Courier:* Take comments to Docket Operations in Room W12–140 of the West Building Ground Floor at 1200 New Jersey Avenue SE., Washington, DC, between 8 a.m. and 5 p.m., Monday through Friday, except federal holidays.
- *Fax:* Fax comments to Docket Operations at 202–493–2251.

Privacy: The FAA will post all comments it receives, without change, to *http://www.regulations.gov/,* including any personal information the commenter provides. Using the search function of the docket Web site, anyone can find and read the electronic form of all comments received into any FAA docket, including the name of the individual sending the comment (or signing the comment for an association, business, labor union, etc.). DOT's complete Privacy Act Statement can be found in the **Federal Register** published on April 11, 2000 (65 FR 19477–19478), as well as at *http://DocketsInfo.dot.gov/.*

Docket: Background documents or comments received may be read at *http://www.regulations.gov/* at any time. Follow the online instructions for accessing the docket or go to the Docket Operations in Room W12–140 of the West Building Ground Floor at 1200 New Jersey Avenue SE., Washington, DC, between 9 a.m. and 5 p.m., Monday through Friday, except federal holidays.

FOR FURTHER INFORMATION CONTACT: Mark Freisthler, FAA, Airframe/Cabin Safety, ANM–115, Transport Airplane Directorate, Aircraft Certification Service, 1601 Lind Avenue SW., Renton, Washington 98057–3356; telephone (425) 227–1119; facsimile (425) 227–1320.

SUPPLEMENTARY INFORMATION:

Comments Invited

We invite interested people to take part in this rulemaking by sending written comments, data, or views. The most helpful comments reference a specific portion of the special conditions, explain the reason for any recommended change, and include supporting data.

We will consider all comments we receive on or before the closing date for comments. We may change these special conditions based on the comments we receive.

Background

On February 9, 2009, Learjet Inc. applied for a type certificate for their new Model LJ–200–1A10 airplane (hereafter referred to as the ''Model LJ–200''). The Model LJ–200 is a business class airplane powered by two high-bypass turbine engines with an estimated maximum takeoff weight of 35,550 pounds and an interior configuration for up to 10 passengers.

The current design includes a skin-stringer fuselage and aft fuselage configuration. The pressure fuselage will consist of monolithic carbon fiber reinforced plastic (CFRP) skin, with CFRP and metallic frames above floor level, and CFRP longerons and stringers. All substructure will be mechanically fastened to the skin. Fasteners for stringers aligned along the length of the co-cured splice will provide fail-safe capability for the splice. Cabin entry door frames, over-wing exit door frames, and frames below floor level will be metallic. Attachment of pressure bulkheads, windshield frame, and splicing concepts will be adjusted for any skin thickness variation that occurs. The wing consists of resin transfer infusion (RTI) skins with composite spars and metallic ribs. The empennage consists of composite sandwich skins with metallic spars and ribs. The airframe has a sandwich construction for the nose and empennage structures.

There are no existing regulations that adequately address the potential difference between metallic fabricated airplanes and composite fabricated airplanes with regards to impact response characteristics for what are considered survivable crash conditions. The CFRP fuselage constitutes a novel and unusual design feature for a transport category airplane. These special conditions are necessary to ensure a level of safety equivalent to that provided by Title 14, Code of Federal Regulations (14 CFR) part 25.

Type Certification Basis

Under the provisions of 14 CFR 21.17, Learjet Inc. must show that the Model LJ–200 meets the applicable provisions of part 25, as amended by Amendments 25–1 through 25–127 thereto, and 14 CFR part 26, as amended by Amendment 26–1 through 26–2 thereto.

If the Administrator finds that the applicable airworthiness regulations (i.e., 14 CFR part 25) do not contain adequate or appropriate safety standards for the Model LJ–200 because of a novel or unusual design feature, special conditions are prescribed under the provisions of § 21.16.

Special conditions are initially applicable to the model for which they are issued. Should the type certificate for that model be amended later to include any other model that incorporates the same or similar novel or unusual design feature, the special conditions would also apply to the other model under § 21.101.

In addition to the applicable airworthiness regulations and special conditions, the Model LJ–200 must comply with the fuel vent and exhaust emission requirements of 14 CFR part 34 and the noise certification requirements of 14 CFR part 36, and the FAA must issue a finding of regulatory adequacy under § 611 of Public Law 92–574, the ''Noise Control Act of 1972.''

The FAA issues special conditions, as defined in 14 CFR 11.19, in accordance with § 11.38, and they become part of

the type-certification basis under § 21.17(a)(2).

Novel or Unusual Design Features

The Model LJ–200 will incorporate the following novel or unusual design features: Hybrid construction using both composite and metallic materials in the structure for which the crashworthiness responses for occupant safety may not be equivalent to current all-metallic airplanes.

Discussion

The Model LJ–200 fuselage is fabricated using carbon fiber reinforced plastic (CFRP) skins with aluminum ribs and stringers. This hybrid construction may behave differently from similar, fully-metallic structure due to differences in material ductility, stiffness, failure modes, and energy absorption characteristics. Therefore, the impact response characteristics of the Model LJ–200 must be evaluated to ensure the survivable crashworthiness characteristics are not significantly different than those of a similarly sized airplane fabricated from traditionally used metallic materials.

The FAA and industry have been working together for many years to understand how transport airplane occupant safety can be improved for what are considered survivable accidents. This work has involved examining airplane accidents, conducting tests to simulate crash conditions, and developing analytical modeling of a range of crash conditions, all with the purpose of providing further insight into the factors that can influence occupant safety. Results of this on-going effort have enabled specific changes to regulatory standards and design practices to improve occupant safety. This evolution is reflected in changes to the part 25 emergency landing condition regulations. For example, airplane emergency load factors in § 25.561, *General,* have been increased, and passenger seat dynamic load conditions have been added (§ 25.562, *Emergency landing dynamic conditions*).

The seat dynamic load conditions were added to the regulations based on FAA and industry tests and a review of accidents. They reflect horizontal and vertical accelerations/time environment generated by previously certificated airplane designs given conditions that were survivable. These tests also demonstrated that the performance of the airframe was acceptable in a dynamic impact event. In the evolution of the regulations, there is at present no specific dynamic regulatory requirement for airplane-level crashworthiness. However, the FAA requires an assessment of each new model airplane to ensure that the airplane will not significantly depart from typical dynamic characteristics found in previously certificated designs.

The nature of the assessment is largely dependent on the similarities and differences between the new type design and previously certificated airplanes. Such an assessment ensures that the level of safety of the new composite designs corresponds to the level of safety achieved with similar metallic designs around which the existing regulations were written. If significant trends in industry warrant change to the existing regulations, the FAA and industry rulemaking process may be used to develop an appropriate dynamic regulatory requirement for airplane level crashworthiness.

The FAA and industry have collected a significant amount of experimental data as well as data from crashes of transport category airplanes that demonstrate a high occupant survival rate at vertical descent velocities up to 30 ft/sec (on a single-aisle airplane). Based on this information, the FAA finds it appropriate and necessary for an assessment of the Model LJ–200 to span a range of airplane vertical descent velocities (up to 30 ft/sec, or that appropriate for a comparable size airplane).

The FAA expects the Model LJ–200 to exhibit similar crashworthiness capabilities under foreseeable survivable impact events as achieved by previously certificated transport category airplanes of similar size and configuration. In order to make this assessment, criteria need to be established by which the similarities and differences between new type designs and previously certificated airplanes may be analytically evaluated. Based on the FAA's evaluation of the intent of existing regulations, the following areas need to be evaluated to demonstrate comparable behavior of the Model LJ–200 design to currently certificated transport category airplanes:

- Retention of items of mass. It must be shown that the occupants, i.e., passengers, flight attendants, and flight crew, will be protected during the impact event from release of seats, overhead bins, and other items of mass due to the impact loads and resultant structural deformation of the supporting airframe and floor structures.
- Maintenance of occupant emergency egress paths. The airframe must not deform such that rapid evacuation of occupants is impeded.
- Maintenance of acceptable acceleration and loads experienced by the occupants.
- Maintenance of a survivable volume. All areas of the airplane occupied for takeoff and landing must be shown to provide a survivable volume during and after the impact event.

Applicability

As discussed above, these special conditions are applicable to the Learjet Model LJ–200–1A10. Should Learjet Inc. apply at a later date for a change to the type certificate to include another model incorporating the same novel or unusual design feature, the special conditions would apply to that model as well.

Conclusion

This action affects only certain novel or unusual design features on one model of airplanes. It is not a rule of general applicability.

List of Subjects in 14 CFR Part 25

Aircraft, Aviation safety, Reporting and recordkeeping requirements.

The authority citation for these special conditions is as follows:

Authority: 49 U.S.C. 106(g), 40113, 44701, 44702, 44704.

The Proposed Special Conditions

Accordingly, the Federal Aviation Administration (FAA) proposes the following special conditions as part of the type certification basis for Learjet Model LJ–200–1A10 airplanes.

In order to demonstrate an equivalent level of occupant safety and survivability to that provided by previously certificated transport category airplanes of similar size and configuration under foreseeable survivable impact events, Learjet must demonstrate that the Model LJ–200–1A10 meets the following criteria for a range of airplane vertical descent velocities up to 30 ft/sec:

1. *Retention of items of mass.* The occupants, i.e., passengers, flight attendants, and flightcrew, must be protected during the impact event from release of seats, overhead bins, and other items of mass due to the impact loads and resultant structural deformation of the supporting airframe and floor structures. The applicant must show that loads due to the impact event and resultant structural deformation of the supporting airframe and floor structure at the interface of the airplane structure to seats, overhead bins, and other items of mass are comparable to those of previously certificated transport category airplanes of similar size for the

range of descent velocities stated above. The attachments of these items need not be designed for static emergency landing loads in excess of those defined in § 25.561 if impact response characteristics of the Model LJ–200–1A10 yield load factors at the attach points comparable with those expected for a previously certificated transport category airplane of similar size.

2. *Maintenance of acceptable acceleration and loads experienced by the occupants.* The applicant must show that the vertical acceleration levels experienced at the seat/floor interface and loads experienced by the occupants during the impact event are consistent with those found in § 25.562(b) or with the levels expected for a previously certificated comparable transport category airplane of similar size.

3. *Maintenance of a survivable volume.* The applicant must show that all areas of the airplane occupied for takeoff and landing provide a survivable volume comparable to that of previously certificated transport category airplanes of similar size during and after the impact event. This means that structural deformation will not result in infringement of the occupants' normal living space significantly affecting their survivability or egress.

4. *Maintenance of occupant emergency egress paths.* The applicant must show that the airframe deformation after the vertical impact event does not impede the rapid evacuation of occupants comparable to previously certified transport category airplanes of similar size.

Issued in Renton, Washington, on September 19, 2013.

Ross Landes,

Acting Manager, Transport Airplane Directorate, Aircraft Certification Service.

[FR Doc. 2013–25841 Filed 10–30–13; 8:45 am]

BILLING CODE 4910–13–P

DEPARTMENT OF TRANSPORTATION

Federal Aviation Administration

14 CFR Part 71

[Docket No. FAA–2013–0017; Airspace Docket No. 13–AAL–1]

Proposed Establishment of Class E Airspace; Central, AK

AGENCY: Federal Aviation Administration (FAA), DOT.

ACTION: Notice of proposed rulemaking (NPRM).

SUMMARY: This action proposes to establish Class E airspace at Central Airport, Central, AK. Controlled airspace is necessary to accommodate the new Area Navigation (RNAV) Global Positioning System (GPS) standard instrument approach procedures at the airport. The FAA is proposing this action to enhance the safety and management of aircraft operations at Central Airport, Central, AK.

DATES: Comments must be received on or before December 16, 2013.

ADDRESSES: Send comments on this proposal to the U.S. Department of Transportation, Docket Operations, M–30, West Building Ground Floor, Room W12–140, 1200 New Jersey Avenue SE., Washington, DC 20590; telephone (202) 366–9826. You must identify FAA Docket No. FAA–2013–0017; Airspace Docket No. 13–AAL–1, at the beginning of your comments. You may also submit comments through the Internet at *http://www.regulations.gov.*

FOR FURTHER INFORMATION CONTACT: Richard Roberts, Federal Aviation Administration, Operations Support Group, Western Service Center, 1601 Lind Avenue SW., Renton, WA 98057; telephone (425) 203–4517.

SUPPLEMENTARY INFORMATION:

Comments Invited

Interested parties are invited to participate in this proposed rulemaking by submitting such written data, views, or arguments, as they may desire. Comments that provide the factual basis supporting the views and suggestions presented are particularly helpful in developing reasoned regulatory decisions on the proposal. Comments are specifically invited on the overall regulatory, aeronautical, economic, environmental, and energy-related aspects of the proposal.

Communications should identify both docket numbers (FAA Docket No. FAA–2013–0017 and Airspace Docket No. 13–AAL–1) and be submitted in triplicate to the Docket Management System (see **ADDRESSES** section for address and phone number). You may also submit comments through the Internet at *http://www.regulations.gov.*

Commenters wishing the FAA to acknowledge receipt of their comments on this action must submit with those comments a self-addressed stamped postcard on which the following statement is made: ''Comments to FAA Docket No. FAA–2013–0017 and Airspace Docket No. 13–AAL–1''. The postcard will be date/time stamped and returned to the commenter.

All communications received on or before the specified closing date for comments will be considered before taking action on the proposed rule. The proposal contained in this action may be changed in light of comments received. All comments submitted will be available for examination in the public docket both before and after the closing date for comments. A report summarizing each substantive public contact with FAA personnel concerned with this rulemaking will be filed in the docket.

Availability of NPRM's

An electronic copy of this document may be downloaded through the Internet at *http://www.regulations.gov.* Recently published rulemaking documents can also be accessed through the FAA's Web page at *http://www.faa.gov/airports_airtraffic/air_traffic/publications/airspace_amendments/.*

You may review the public docket containing the proposal, any comments received, and any final disposition in person in the Dockets Office (see the **ADDRESSES** section for the address and phone number) between 9:00 a.m. and 5:00 p.m., Monday through Friday, except federal holidays. An informal docket may also be examined during normal business hours at the Northwest Mountain Regional Office of the Federal Aviation Administration, Air Traffic Organization, Western Service Center, Operations Support Group, 1601 Lind Avenue SW., Renton, WA 98057.

Persons interested in being placed on a mailing list for future NPRM's should contact the FAA's Office of Rulemaking, (202) 267–9677, for a copy of Advisory Circular No. 11–2A, Notice of Proposed Rulemaking Distribution System, which describes the application procedure.

The Proposal

The FAA is proposing an amendment to Title 14 Code of Federal Regulations (14 CFR) Part 71 by establishing Class E airspace extending upward from 700 feet above the surface at Central, AK. Airspace is needed to accommodate the new RNAV (GPS) standard instrument approaches and departures developed for the airport. Class E airspace extending upward from 700 feet above the surface would be established within an area 17 miles east and west of the airport and 4 miles north and 9 miles south of the airport. This action would enhance the safety and management of aircraft operations at the airport.

Class E airspace designations are published in paragraph 6005, of FAA Order 7400.9X, dated August 7, 2013, and effective September 15, 2013, which is incorporated by reference in 14 CFR 71.1. The Class E airspace designation listed in this document will be published subsequently in this Order.

The FAA has determined this proposed regulation only involves an established body of technical regulations for which frequent and routine amendments are necessary to keep them operationally current. Therefore, this proposed regulation; (1) is not a ''significant regulatory action'' under Executive Order 12866; (2) is not a ''significant rule'' under DOT Regulatory Policies and Procedures (44 FR 11034; February 26, 1979); and (3) does not warrant preparation of a regulatory evaluation as the anticipated impact is so minimal. Since this is a routine matter that will only affect air traffic procedures and air navigation, it is certified this proposed rule, when promulgated, would not have a significant economic impact on a substantial number of small entities under the criteria of the Regulatory Flexibility Act.

The FAA's authority to issue rules regarding aviation safety is found in Title 49 of the U.S. Code. Subtitle 1, Section 106, describes the authority for the FAA Administrator. Subtitle VII, Aviation Programs, describes in more detail the scope of the agency's authority. This rulemaking is promulgated under the authority described in Subtitle VII, Part A, Subpart I, Section 40103. Under that section, the FAA is charged with prescribing regulations to assign the use of the airspace necessary to ensure the safety of aircraft and the efficient use of airspace. This proposed regulation is within the scope of that authority as it would modify controlled airspace at Central Airport, Central, AK.

This proposal will be subject to an environmental analysis in accordance with FAA Order 1050.1E, ''Environmental Impacts: Policies and Procedures'' prior to any FAA final regulatory action.

List of Subjects in 14 CFR Part 71

Airspace, Incorporation by reference, Navigation (air).

The Proposed Amendment

Accordingly, pursuant to the authority delegated to me, the Federal Aviation Administration proposes to amend 14 CFR part 71 as follows:

PART 71—DESIGNATION OF CLASS A, B, C, D AND E AIRSPACE AREAS; AIR TRAFFIC SERVICE ROUTES; AND REPORTING POINTS

■ 1. The authority citation for 14 CFR part 71 continues to read as follows:

Authority: 49 U.S.C. 106(g), 40103, 40113, 40120; E.O. 10854, 24 FR 9565, 3 CFR, 1959–1963 Comp., p. 389.

§ 71.1 [Amended]

■ 2. The incorporation by reference in 14 CFR 71.1 of the Federal Aviation Administration Order 7400.9X, Airspace Designations and Reporting Points, dated August 7, 2013, and effective September 15, 2013 is amended as follows:

Paragraph 6005 Class E airspace areas extending upward from 700 feet or more above the surface of the earth.

* * * * *

AAL AK E5 Central, AK [New]

Central Airport, AK

(Lat. 65°34′26″ N., long. 144°46′51″ W.)

That airspace extending upward from 700 feet above the surface bounded by a line beginning at lat. 65°44′11″ N., long. 145°29′55″ W.; to lat. 65°34′00″ N., long. 144°04′28″ W.; to lat. 65°22′44″ N., long. 144°10′35″ W.; to lat. 65°26′43″ N., long. 145°19′38″ W.; thence to the point of origin.

Issued in Seattle, Washington, on October 23, 2013.

Clark Desing,

Manager, Operations Support Group, Western Service Center.

[FR Doc. 2013–25970 Filed 10–30–13; 8:45 am]

BILLING CODE 4910–13–P

DEPARTMENT OF TRANSPORTATION

Federal Aviation Administration

14 CFR Part 71

[Docket No. FAA–2013–0777; Airspace Docket No. 12–AAL–16]

Proposed Establishment of Class E Airspace; Eagle, AK

AGENCY: Federal Aviation Administration (FAA), DOT.

ACTION: Notice of proposed rulemaking (NPRM).

SUMMARY: This action proposes to establish Class E airspace at Eagle Airport, Eagle, AK. Controlled airspace is necessary to accommodate the new Area Navigation (RNAV) Global Positioning System (GPS) standard instrument approach procedures developed for the airport. The FAA is proposing this action to enhance the safety and management of aircraft operations at Eagle Airport, Eagle, AK.

DATES: Comments must be received on or before December 16, 2013.

ADDRESSES: Send comments on this proposal to the U.S. Department of Transportation, Docket Operations, M–30, West Building Ground Floor, Room W12–140, 1200 New Jersey Avenue SE., Washington, DC 20590; telephone (202) 366–9826. You must identify FAA Docket No. FAA–2013–0017; Airspace Docket No. 13–AAL–1, at the beginning of your comments. You may also submit comments through the Internet at *http://www.regulations.gov.*

FOR FURTHER INFORMATION CONTACT: Richard Roberts, Federal Aviation Administration, Operations Support Group, Western Service Center, 1601 Lind Avenue SW., Renton, WA 98057; telephone (425) 203–4517.

SUPPLEMENTARY INFORMATION:

Comments Invited

Interested parties are invited to participate in this proposed rulemaking by submitting such written data, views, or arguments, as they may desire. Comments that provide the factual basis supporting the views and suggestions presented are particularly helpful in developing reasoned regulatory decisions on the proposal. Comments are specifically invited on the overall regulatory, aeronautical, economic, environmental, and energy-related aspects of the proposal.

Communications should identify both docket numbers (FAA Docket No. FAA–2013–0777 and Airspace Docket No. 12–AAL–16) and be submitted in triplicate to the Docket Management System (see **ADDRESSES** section for address and phone number). You may also submit comments through the Internet at *http://www.regulations.gov.*

Commenters wishing the FAA to acknowledge receipt of their comments on this action must submit with those comments a self-addressed stamped postcard on which the following statement is made: ''Comments to FAA Docket No. FAA–2013–0777 and Airspace Docket No. 12–AAL–16''. The postcard will be date/time stamped and returned to the commenter.

All communications received on or before the specified closing date for comments will be considered before taking action on the proposed rule. The proposal contained in this action may be changed in light of comments received. All comments submitted will be available for examination in the public docket both before and after the closing date for comments. A report summarizing each substantive public contact with FAA personnel concerned with this rulemaking will be filed in the docket.

Availability of NPRMs

An electronic copy of this document may be downloaded through the Internet at *http://www.regulations.gov.* Recently published rulemaking documents can also be accessed through the FAA's Web page at *http://*

www.faa.gov/airports_airtraffic/air_traffic/publications/airspace_amendments/.

You may review the public docket containing the proposal, any comments received, and any final disposition in person in the Dockets Office (see the **ADDRESSES** section for the address and phone number) between 9:00 a.m. and 5:00 p.m., Monday through Friday, except federal holidays. An informal docket may also be examined during normal business hours at the Northwest Mountain Regional Office of the Federal Aviation Administration, Air Traffic Organization, Western Service Center, Operations Support Group, 1601 Lind Avenue SW., Renton, WA 98057.

Persons interested in being placed on a mailing list for future NPRM's should contact the FAA's Office of Rulemaking, (202) 267–9677, for a copy of Advisory Circular No. 11–2A, Notice of Proposed Rulemaking Distribution System, which describes the application procedure.

The Proposal

The FAA is proposing an amendment to Title 14 Code of Federal Regulations (14 CFR) Part 71 by establishing Class E airspace extending upward from 700 feet above the surface within a 2.5-mile radius of Eagle Airport, Eagle, AK, with a segment extending from the 2.5-mile radius to 8.5 miles west of the airport. Controlled airspace is needed to accommodate the new RNAV (GPS) standard instrument approaches and departures developed for the airport and would enhance the safety and management of aircraft operations.

Class E airspace designations are published in paragraph 6005, of FAA Order 7400.9X, dated August 7, 2013, and effective September 15, 2013, which is incorporated by reference in 14 CFR 71.1. The Class E airspace designation listed in this document will be published subsequently in this Order.

The FAA has determined this proposed regulation only involves an established body of technical regulations for which frequent and routine amendments are necessary to keep them operationally current. Therefore, this proposed regulation; (1) Is not a ''significant regulatory action'' under Executive Order 12866; (2) is not a ''significant rule'' under DOT Regulatory Policies and Procedures (44 FR 11034; February 26, 1979); and (3) does not warrant preparation of a regulatory evaluation as the anticipated impact is so minimal. Since this is a routine matter that will only affect air traffic procedures and air navigation, it is certified this proposed rule, when promulgated, would not have a significant economic impact on a substantial number of small entities under the criteria of the Regulatory Flexibility Act.

The FAA's authority to issue rules regarding aviation safety is found in Title 49 of the U.S. Code. Subtitle 1, Section 106, describes the authority for the FAA Administrator. Subtitle VII, Aviation Programs, describes in more detail the scope of the agency's authority. This rulemaking is promulgated under the authority described in Subtitle VII, Part A, Subpart I, Section 40103. Under that section, the FAA is charged with prescribing regulations to assign the use of the airspace necessary to ensure the safety of aircraft and the efficient use of airspace. This proposed regulation is within the scope of that authority as it would modify controlled airspace at Eagle Airport, Eagle, AK.

This proposal will be subject to an environmental analysis in accordance with FAA Order 1050.1E, ''Environmental Impacts: Policies and Procedures'' prior to any FAA final regulatory action.

List of Subjects in 14 CFR Part 71

Airspace, Incorporation by reference, Navigation (air).

The Proposed Amendment

Accordingly, pursuant to the authority delegated to me, the Federal Aviation Administration proposes to amend 14 CFR Part 71 as follows:

PART 71—DESIGNATION OF CLASS A, B, C, D AND E AIRSPACE AREAS; AIR TRAFFIC SERVICE ROUTES; AND REPORTING POINTS

■ 1. The authority citation for 14 CFR Part 71 continues to read as follows:

Authority: 49 U.S.C. 106(g), 40103, 40113, 40120; E.O. 10854, 24 FR 9565, 3 CFR, 1959–1963 Comp., p. 389.

§ 71.1 [Amended]

■ 2. The incorporation by reference in 14 CFR 71.1 of the Federal Aviation Administration Order 7400.9X, Airspace Designations and Reporting Points, dated August 7 2013, and effective September 15, 2013 is amended as follows:

Paragraph 6005 Class E airspace areas extending upward from 700 feet or more above the surface of the earth.

* * * * *

AAL AK E5 Eagle, AK

Eagle Airport, AK
(Lat. 64°46′41″ N., long. 141°08′59″ W.)

Within a 2.5-mile radius of the Eagle, AK airport and within 2.5 miles each side of the 290° radial extending from the 2.5-mile radius to 8.5 miles west of the airport.

Issued in Seattle, Washington, on October 23, 2013.

Clark Desing,

Manager, Operations Support Group, Western Service Center.

[FR Doc. 2013–25995 Filed 10–30–13; 8:45 am]

BILLING CODE 4910–13–P

DEPARTMENT OF TRANSPORTATION

Federal Aviation Administration

14 CFR Part 71

[Docket No. FAA–2012–0078; Airspace Docket No. 12–AAL–1]

Proposed Establishment of Class E Airspace; Brevig Mission, AK

AGENCY: Federal Aviation Administration (FAA), DOT.

ACTION: Notice of proposed rulemaking (NPRM).

SUMMARY: This action proposes to establish Class E airspace at Brevig Mission Airport, Brevig Mission, AK. Controlled airspace is necessary to accommodate aircraft using new Area Navigation (RNAV) Global Positioning System (GPS) standard instrument approach procedures at the airport. The FAA is proposing this action to enhance the safety and management of aircraft operations at the airport.

DATES: Comments must be received on or before December 16, 2013.

ADDRESSES: Send comments on this proposal to the U.S. Department of Transportation, Docket Operations, M–30, West Building Ground Floor, Room W12–140, 1200 New Jersey Avenue SE., Washington, DC 20590; telephone (202) 366–9826. You must identify FAA Docket No. FAA–2012–0078; Airspace Docket No. 12–AAL–1, at the beginning of your comments. You may also submit comments through the Internet at *http://www.regulations.gov.*

FOR FURTHER INFORMATION CONTACT: Richard Roberts, Federal Aviation Administration, Operations Support Group, Western Service Center, 1601 Lind Avenue SW., Renton, WA 98057; telephone (425) 203–4517.

SUPPLEMENTARY INFORMATION:

Comments Invited

Interested parties are invited to participate in this proposed rulemaking by submitting such written data, views, or arguments, as they may desire. Comments that provide the factual basis supporting the views and suggestions presented are particularly helpful in developing reasoned regulatory decisions on the proposal. Comments

are specifically invited on the overall regulatory, aeronautical, economic, environmental, and energy-related aspects of the proposal.

Communications should identify both docket numbers (FAA Docket No. FAA 2012–0078 and Airspace Docket No. 12–AAL–1) and be submitted in triplicate to the Docket Management System (see **ADDRESSES** section for address and phone number). You may also submit comments through the Internet at *http://www.regulations.gov.*

Commenters wishing the FAA to acknowledge receipt of their comments on this action must submit with those comments a self-addressed stamped postcard on which the following statement is made: ''Comments to FAA Docket No. FAA–2012–0078 and Airspace Docket No. 12–AAL–1''. The postcard will be date/time stamped and returned to the commenter.

All communications received on or before the specified closing date for comments will be considered before taking action on the proposed rule. The proposal contained in this action may be changed in light of comments received. All comments submitted will be available for examination in the public docket both before and after the closing date for comments. A report summarizing each substantive public contact with FAA personnel concerned with this rulemaking will be filed in the docket.

Availability of NPRMs

An electronic copy of this document may be downloaded through the Internet at *http://www.regulations.gov.* Recently published rulemaking documents can also be accessed through the FAA's Web page at *http://www.faa.gov/airports_airtraffic/air_traffic/publications/airspace_amendments/.*

You may review the public docket containing the proposal, any comments received, and any final disposition in person in the Dockets Office (see the **ADDRESSES** section for the address and phone number) between 9:00 a.m. and 5:00 p.m., Monday through Friday, except federal holidays. An informal docket may also be examined during normal business hours at the Northwest Mountain Regional Office of the Federal Aviation Administration, Air Traffic Organization, Western Service Center, Operations Support Group, 1601 Lind Avenue SW., Renton, WA 98057.

Persons interested in being placed on a mailing list for future NPRM's should contact the FAA's Office of Rulemaking, (202) 267–9677, for a copy of Advisory Circular No. 11–2A, Notice of Proposed Rulemaking Distribution System, which describes the application procedure.

The Proposal

The FAA is proposing an amendment to Title 14 Code of Federal Regulations (14 CFR) Part 71 by establishing Class E airspace extending upward from 700 feet above the surface at Brevig Mission Airport, Brevig Mission, AK. Controlled airspace extending 2 miles north, 6 miles south, 8 miles southeast and 11 miles northwest of the airport is necessary to accommodate the new RNAV (GPS) standard instrument approach procedures at the airport, and would enhance the safety and management of aircraft operations.

Class E airspace designations are published in paragraph 6005 of FAA Order 7400.9X, dated August 7, 2013, and effective September 15, 2013, which is incorporated by reference in 14 CFR 71.1. The Class E airspace designation listed in this document will be published subsequently in this Order.

The FAA has determined this proposed regulation only involves an established body of technical regulations for which frequent and routine amendments are necessary to keep them operationally current. Therefore, this proposed regulation; (1) is not a ''significant regulatory action'' under Executive Order 12866; (2) is not a ''significant rule'' under DOT Regulatory Policies and Procedures (44 FR 11034; February 26, 1979); and (3) does not warrant preparation of a regulatory evaluation as the anticipated impact is so minimal. Since this is a routine matter that will only affect air traffic procedures and air navigation, it is certified this proposed rule, when promulgated, would not have a significant economic impact on a substantial number of small entities under the criteria of the Regulatory Flexibility Act.

The FAA's authority to issue rules regarding aviation safety is found in Title 49 of the U.S. Code. Subtitle 1, Section 106, describes the authority for the FAA Administrator. Subtitle VII, Aviation Programs, describes in more detail the scope of the agency's authority. This rulemaking is promulgated under the authority described in Subtitle VII, Part A, Subpart I, Section 40103. Under that section, the FAA is charged with prescribing regulations to assign the use of the airspace necessary to ensure the safety of aircraft and the efficient use of airspace. This proposed regulation is within the scope of that authority as it would establish controlled airspace at Brevig Mission Airport, Brevig Mission, AK.

This proposal will be subject to an environmental analysis in accordance with FAA Order 1050.1E, ''Environmental Impacts: Policies and Procedures'' prior to any FAA final regulatory action.

List of Subjects in 14 CFR Part 71

Airspace, Incorporation by reference, Navigation (air).

The Proposed Amendment

Accordingly, pursuant to the authority delegated to me, the Federal Aviation Administration proposes to amend 14 CFR Part 71 as follows:

PART 71—DESIGNATION OF CLASS A, B, C, D AND E AIRSPACE AREAS; AIR TRAFFIC SERVICE ROUTES; AND REPORTING POINTS

■ 1. The authority citation for 14 CFR Part 71 continues to read as follows:

Authority: 49 U.S.C. 106(g), 40103, 40113, 40120; E.O. 10854, 24 FR 9565, 3 CFR, 1959–1963 Comp., p. 389.

§ 71.1 [Amended]

■ 2. The incorporation by reference in 14 CFR 71.1 of the Federal Aviation Administration Order 7400.9X, Airspace Designations and Reporting Points, dated August 7, 2013, and effective September 15, 2013 is amended as follows:

Paragraph 6005 Class E airspace areas extending upward from 700 feet or more above the surface of the earth.

* * * * *

AAL AK E5 BREVIG MISSION, AK [New]

Brevig Mission Airport, AK
(Lat. 65°19′53″ N., long. 166°27′57″ W.)

That airspace extending upward from 700 feet above the surface within a line beginning at lat. 65°14′37″ N. long 166°38′26″ W. to lat. 65°13′20″ N. long.166°15′02″ W., to lat. 65°16′35″ N. long. 166°11′17″ W., to lat. 65°28′29″ N. long. 166°45′20″ W., to lat. 65°26′22″ N. long.166°52′31″ W., thence to the point of beginning.

Issued in Seattle, Washington, on October 23, 2013.

Clark Desing,

Manager, Operations Support Group, Western Service Center.

[FR Doc. 2013–25991 Filed 10–30–13; 8:45 am]

BILLING CODE 4910–13–P

DEPARTMENT OF TRANSPORTATION

Federal Aviation Administration

14 CFR Part 71

[Docket No. FAA–2013–0622; Airspace Docket No. 13–AWP–10]

Proposed Modification of Class D and Class E Airspace; Kailua-Kona, HI

AGENCY: Federal Aviation Administration (FAA), DOT.

ACTION: Notice of proposed rulemaking (NPRM).

SUMMARY: This action proposes to modify Class D and E airspace at Kona International Airport at Keahole, Kailua-Kona, HI. Controlled airspace is necessary to accommodate the Area Navigation (RNAV) Global Positioning System (GPS) and the Instrument Landing System (ILS) or Localizer (LOC) standard instrument approach procedures at the airport. The geographic coordinates of the airport also would be adjusted in the respective Class D and E airspace areas, and the airport name will be corrected to Kona International Airport at Keahole. This action, initiated by the biennial review of the Kona airspace area, would enhance the safety and management of aircraft operations at the airport.

DATES: Comments must be received on or before December 16, 2013.

ADDRESSES: Send comments on this proposal to the U.S. Department of Transportation, Docket Operations, M–30, West Building Ground Floor, Room W12–140, 1200 New Jersey Avenue SE., Washington, DC 20590; telephone (202) 366–9826. You must identify FAA Docket No. FAA–2013–0622; Airspace Docket No. 13–AWP–10, at the beginning of your comments. You may also submit comments through the Internet at *http://www.regulations.gov.*

FOR FURTHER INFORMATION CONTACT: Eldon Taylor, Federal Aviation Administration, Operations Support Group, Western Service Center, 1601 Lind Avenue SW., Renton, WA 98057; telephone (425) 203–4537.

SUPPLEMENTARY INFORMATION:

Comments Invited

Interested parties are invited to participate in this proposed rulemaking by submitting such written data, views, or arguments, as they may desire. Comments that provide the factual basis supporting the views and suggestions presented are particularly helpful in developing reasoned regulatory decisions on the proposal. Comments are specifically invited on the overall regulatory, aeronautical, economic, environmental, and energy-related aspects of the proposal.

Communications should identify both docket numbers (FAA Docket No. FAA 2013–0622 and Airspace Docket No. 13–AWP–10) and be submitted in triplicate to the Docket Management System (see **ADDRESSES** section for address and phone number). You may also submit comments through the Internet at *http://www.regulations.gov.*

Commenters wishing the FAA to acknowledge receipt of their comments on this action must submit with those comments a self-addressed stamped postcard on which the following statement is made: ''Comments to FAA Docket No. FAA–2013–0622 and Airspace Docket No. 13–AWP–10''. The postcard will be date/time stamped and returned to the commenter.

All communications received on or before the specified closing date for comments will be considered before taking action on the proposed rule. The proposal contained in this action may be changed in light of comments received. All comments submitted will be available for examination in the public docket both before and after the closing date for comments. A report summarizing each substantive public contact with FAA personnel concerned with this rulemaking will be filed in the docket.

Availability of NPRM's

An electronic copy of this document may be downloaded through the Internet at *http://www.regulations.gov.* Recently published rulemaking documents can also be accessed through the FAA's Web page at *http://www.faa.gov/airports_airtraffic/air_traffic/publications/airspace_amendments/.*

You may review the public docket containing the proposal, any comments received, and any final disposition in person in the Dockets Office (see the **ADDRESSES** section for the address and phone number) between 9:00 a.m. and 5:00 p.m., Monday through Friday, except federal holidays. An informal docket may also be examined during normal business hours at the Northwest Mountain Regional Office of the Federal Aviation Administration, Air Traffic Organization, Western Service Center, Operations Support Group, 1601 Lind Avenue SW., Renton, WA 98057.

Persons interested in being placed on a mailing list for future NPRM's should contact the FAA's Office of Rulemaking, (202) 267–9677, for a copy of Advisory Circular No. 11–2A, Notice of Proposed Rulemaking Distribution System, which describes the application procedure.

The Proposal

The FAA is proposing an amendment to Title 14 Code of Federal Regulations (14 CFR) Part 71 by modifying the Class E airspace area extending upward from 700 feet above the surface, at Kona International Airport at Keahole, Kailua-Kona, HI. The segment of controlled airspace extending from the 7.4-mile radius of the airport is increased from 8.5 miles to 14.5 miles south of the airport to accommodate the RNAV (GPS) and ILS or LOC standard instrument approach procedures. Also, the geographic coordinates of the airport would be updated to coincide with the FAA's aeronautical database for the respective Class D and E airspace areas. The airport formerly called Kailua-Kona, Keahole Airport, Keahole Airport is corrected to Kona International Airport at Keahole. This action was initiated by a biennial review of the airspace and is necessary for the safety and management of aircraft operations at the airport.

Class D and Class E airspace designations are published in paragraphs 5000, 6004 and 6005, respectively, of FAA Order 7400.9X, dated August 7, 2013, and effective September 15, 2013, which is incorporated by reference in 14 CFR 71.1. The Class D and Class E airspace designations listed in this document will be published subsequently in this Order.

The FAA has determined this proposed regulation only involves an established body of technical regulations for which frequent and routine amendments are necessary to keep them operationally current. Therefore, this proposed regulation; (1) Is not a ''significant regulatory action'' under Executive Order 12866; (2) is not a ''significant rule'' under DOT Regulatory Policies and Procedures (44 FR 11034; February 26, 1979); and (3) does not warrant preparation of a regulatory evaluation as the anticipated impact is so minimal. Since this is a routine matter that will only affect air traffic procedures and air navigation, it is certified this proposed rule, when promulgated, would not have a significant economic impact on a substantial number of small entities under the criteria of the Regulatory Flexibility Act.

The FAA's authority to issue rules regarding aviation safety is found in Title 49 of the U.S. Code. Subtitle 1, Section 106, describes the authority for the FAA Administrator. Subtitle VII, Aviation Programs, describes in more detail the scope of the agency's authority. This rulemaking is

promulgated under the authority described in Subtitle VII, Part A, Subpart I, Section 40103. Under that section, the FAA is charged with prescribing regulations to assign the use of the airspace necessary to ensure the safety of aircraft and the efficient use of airspace. This proposed regulation is within the scope of that authority as it would modify controlled airspace at Kona International Airport at Keahole, Kailua-Kona, HI.

This proposal will be subject to an environmental analysis in accordance with FAA Order 1050.1E, ''Environmental Impacts: Policies and Procedures'' prior to any FAA final regulatory action.

List of Subjects in 14 CFR Part 71

Airspace, Incorporation by reference, Navigation (air).

The Proposed Amendment

Accordingly, pursuant to the authority delegated to me, the Federal Aviation Administration proposes to amend 14 CFR Part 71 as follows:

PART 71—DESIGNATION OF CLASS A, B, C, D AND E AIRSPACE AREAS; AIR TRAFFIC SERVICE ROUTES; AND REPORTING POINTS

■ 1. The authority citation for 14 CFR Part 71 continues to read as follows:

Authority: 49 U.S.C. 106(g), 40103, 40113, 40120; E.O. 10854, 24 FR 9565, 3 CFR, 1959–1963 Comp., p. 389.

§ 71.1 [Amended]

■ 2. The incorporation by reference in 14 CFR 71.1 of the Federal Aviation Administration Order 7400.9X, Airspace Designations and Reporting Points, dated August 7, 2013, and effective September 15, 2013 is amended as follows:

Paragraph 5000 Class D airspace.

* * * * *

AWP HI D Kailua-Kona, HI [Modified]

Kona International Airport at Keahole, HI
(Lat. 19°44′20″ N., long. 156°02′44″ W.)

That airspace extending upward from the surface to and including 2,500 feet MSL within a 4.3-mile radius of Kona International Airport at Keahole. This Class D airspace area is effective during the specific dates and times established in advance by a Notice to Airmen. The effective date and time will thereafter be continuously published in the Airport/Facility Directory, Pacific Chart Supplement.

Paragraph 6004 Class E airspace designated as an extension to Class D surface area.

* * * * *

AWP HI E4 Kailua-Kona, HI [Modified]

Kona International Airport at Keahole, HI
(Lat. 19°44′20″ N., long. 156°02′44″ W.)

That airspace extending upward from the surface within 2.8 miles either side of the 186° bearing of the Kona International Airport at Keahole extending from the 4.3-mile radius of the airport to 5.7 miles south of the airport, and within 4.3 miles either side of the 006° bearing of the airport extending from the 4.3-mile radius to 11.5 miles north of the airport.

This Class E airspace area is effective during the specific dates and times established in advance by a Notice to Airmen. The effective date and time will thereafter be continuously published in the Airport/Facility Directory, Pacific Chart Supplement.

Paragraph 6005 Class E airspace areas extending upward from 700 feet or more above the surface of the earth.

* * * * *

AWP HI E5 Kailua-Kona, HI [Modified]

Kona International Airport at Keahole, HI
(Lat. 19°44′20″ N., long. 156°02′44″ W.)

That airspace extending upward from 700 feet above the surface within a 7.4-mile radius of the Kona International Airport at Keahole, and within 4.3 miles each side of the 006° bearing of the airport extending from the 7.4-mile radius to 11.5 miles north of the airport, and within 4 miles each side of the 186° bearing of the airport extending from the 7.4-mile radius to 8.5 miles south of the airport.

Issued in Seattle, Washington, on October 23, 2013.

Clark Desing,

Manager, Operations Support Group, Western Service Center.

[FR Doc. 2013–25994 Filed 10–30–13; 8:45 am]

BILLING CODE 4910–13–P

DEPARTMENT OF LABOR

Occupational Safety and Health Administration

29 CFR Parts 1910, 1915, and 1926

[Docket No. OSHA–2010–0034]

RIN 1218–AB70

Occupational Exposure to Crystalline Silica; Extension of Comment Period; Extension of Period To Submit Notices of Intention To Appear at Public Hearings; Scheduling of Public Hearings

AGENCY: Occupational Safety and Health Administration (OSHA), Labor.

ACTION: Proposed rule; extension of comment period; extension of deadline for submitting notices of intention to appear at public hearings; scheduling of public hearings.

SUMMARY: The Occupational Safety and Health Administration (OSHA) is extending the deadline for submitting comments on the Notice of Proposed Rulemaking (NPRM) on Occupational Exposure to Crystalline Silica for an additional 47 days and extending the deadline for submitting notices of intention to appear at its informal public hearings for an additional 30 days. OSHA also is delaying the start of the public hearings by two weeks.

DATES: *Written comments.* Written comments on the NPRM must be submitted (postmarked, sent, or received) by Monday, January 27, 2014.

Informal public hearings. The Agency plans to hold informal public hearings beginning on Tuesday, March 18, 2014, in Washington, DC. OSHA expects the hearings to last from 9:30 a.m. to 5:30 p.m., local time; a schedule will be released prior to the start of the hearings. The exact daily schedule may be amended at the discretion of the presiding administrative law judge (ALJ). If necessary, the hearings will continue at the same time on subsequent days. Peer reviewers of OSHA's Health Effects Literature Review and Preliminary Quantitative Risk Assessment will be present in Washington, DC to hear testimony on the second day of the hearing, March 19, 2014; *see* Section XV of the NPRM preamble for more information on the peer review process (78 FR 56274, 56440–56442; September 12, 2013).

Notice of intention to appear at the hearings. Interested persons who intend to present testimony or question witnesses at the hearings must submit (transmit, send, postmark, deliver) a notice of their intention to do so by December 12, 2013. The notice of intent must indicate if the submitter requests to present testimony on March 19, 2014, in the presence of the peer reviewers.

Hearing testimony and documentary evidence. Interested persons who request more than 10 minutes to present testimony, or who intend to submit documentary evidence, at the hearings must submit (transmit, send, postmark, deliver) the full text of their testimony and all documentary evidence by January 27, 2014. *See* Section XV of the NPRM preamble for details on the format and how to file a notice of intention to appear, submit documentary evidence at the hearing, and request an appropriate amount of time to present testimony (78 FR 56274, 56440–56442; September 12, 2013).

ADDRESSES: *Written comments.* You may submit comments, identified by Docket No. OSHA–2010–0034, by any of the following methods:

Electronically: You may submit comments and attachments

electronically at *http://www.regulations.gov,* which is the Federal e-Rulemaking Portal. Follow the instructions on-line for making electronic submissions.

Fax: If your submissions, including attachments, are not longer than 10 pages, you may fax them to the OSHA Docket Office at (202) 693–1648.

Mail, hand delivery, express mail, messenger, or courier service: You may submit your comments to the OSHA Docket Office, Docket No. OSHA–2010–0034, U.S. Department of Labor, Room N–2625, 200 Constitution Avenue NW., Washington, DC 20210, telephone (202) 693–2350 (OSHA's TTY number is (877) 889–5627). Deliveries (hand, express mail, messenger, or courier service) are accepted during the Department of Labor's and Docket Office's normal business hours, 8:15 a.m. to 4:45 p.m., E.T.

Instructions: All submissions must include the Agency name and the docket number for this rulemaking (Docket No. OSHA–2010–0034). All comments, including any personal information you provide, are placed in the public docket without change and may be made available online at *http://www.regulations.gov.* Therefore, OSHA cautions you about submitting personal information such as social security numbers and birthdates.

If you submit scientific or technical studies or other results of scientific research, OSHA requests (but is not requiring) that you also provide the following information where it is available: (1) Identification of the funding source(s) and sponsoring organization(s) of the research; (2) the extent to which the research findings were reviewed by a potentially affected party prior to publication or submission to the docket, and identification of any such parties; and (3) the nature of any financial relationships (*e.g.,* consulting agreements, expert witness support, or research funding) between investigators who conducted the research and any organization(s) or entities having an interest in the rulemaking. If you are submitting comments or testimony on the Agency's scientific and technical analyses, OSHA requests that you disclose: (1) The nature of any financial relationships you may have with any organization(s) or entities having an interest in the rulemaking; and (2) the extent to which your comments or testimony were reviewed by an interested party prior to its submission. Disclosure of such information is intended to promote transparency and scientific integrity of data and technical information submitted to the record. This request is consistent with Executive Order 13563, issued on January 18, 2011, which instructs agencies to ensure the objectivity of any scientific and technological information used to support their regulatory actions. OSHA emphasizes that all material submitted to the rulemaking record will be considered by the Agency to develop the final rule and supporting analyses.

Informal public hearings. The Washington, DC hearing will be held in the auditorium of the U.S. Department of Labor, 200 Constitution Avenue NW., Washington, DC 20210.

Notice of intention to appear, hearing testimony and documentary evidence. You may submit (transmit, send, postmark, deliver) your notice of intention to appear, hearing testimony, and documentary evidence, identified by docket number (OSHA–2010–0034), by any of the following methods:

Electronically: http://www.regulations.gov. Follow the instructions online for electronic submission of materials, including attachments.

Fax: If your written submission does not exceed 10 pages, including attachments, you may fax it to the OSHA Docket Office at (202) 693–1648.

Regular mail, express delivery, hand delivery, and messenger and courier service: Submit your materials to the OSHA Docket Office, Docket No. OSHA–2010–0034, U.S. Department of Labor, Room N–2625, 200 Constitution Avenue NW., Washington, DC 20210; telephone (202) 693–2350 (TTY number (877) 889–5627). Deliveries (express mail, hand delivery, and messenger and courier service) are accepted during the Department of Labor's and OSHA Docket Office's normal hours of operation, 8:15 a.m. to 4:45 p.m., ET.

Instructions: All submissions must include the Agency name and docket number for this rulemaking (Docket No. OSHA–2010–0034). All submissions, including any personal information, are placed in the public docket without change and may be available online at *http://www.regulations.gov.* Therefore, OSHA cautions you about submitting certain personal information, such as social security numbers and birthdates. Because of security-related procedures, the use of regular mail may cause a significant delay in the receipt of your submissions. For information about security-related procedures for submitting materials by express delivery, hand delivery, messenger, or courier service, please contact the OSHA Docket Office. For additional information on submitting notices of intention to appear, hearing testimony or documentary evidence, *see* Section XV of the NPRM preamble, Public Participation (78 FR 56274, 56440–56442; September 12, 2013).

Docket: To read or download comments, notices of intention to appear, and materials submitted in response to this **Federal Register** notice, go to Docket No. OSHA–2010–0034 at *http://www.regulations.gov* or to the OSHA Docket Office at the address above. All comments and submissions are listed in the *http://www.regulations.gov* index; however, some information (*e.g.,* copyrighted material) is not publicly available to read or download through that Web site. All comments and submissions are available for inspection and, where permissible, copying at the OSHA Docket Office.

Electronic copies of this **Federal Register** document are available at *http://regulations.gov.* Copies also are available from the OSHA Office of Publications, Room N–3101, U.S. Department of Labor, 200 Constitution Avenue NW., Washington, DC 20210; telephone (202) 693–1888. This document, as well as news releases and other relevant information, is also available at OSHA's Web site at *http://www.osha.gov.*

FOR FURTHER INFORMATION CONTACT: For general information and press inquiries, contact Frank Meilinger, Director, Office of Communications, Room N–3647, OSHA, U.S. Department of Labor, 200 Constitution Avenue NW., Washington, DC 20210; telephone (202) 693–1999; email *meilinger.francis2@dol.gov.* For technical inquiries, contact William Perry or David O'Connor, Directorate of Standards and Guidance, Room N–3718, OSHA, U.S. Department of Labor, 200 Constitution Avenue NW., Washington, DC 20210; telephone (202) 693–1950 or fax (202) 693–1678. For hearing inquiries, contact Frank Meilinger, Director, Office of Communications, Room N–3647, OSHA, U.S. Department of Labor, 200 Constitution Avenue NW., Washington, DC 20210; telephone (202) 693–1999; email *meilinger.francis2@dol.gov.*

SUPPLEMENTARY INFORMATION: OSHA published a notice of proposed rulemaking on September 12, 2013, for occupational exposure to respirable crystalline silica (78 FR 56274). This notice requested written comments by December 11, 2013 and notices of intention to appear at the public hearings by November 12, 2013; as well as established the public hearing to commence on March 4, 2014. Several interested parties have requested an extension of the comment period, explaining that they needed additional time to provide a thorough review and

response to the NPRM. OSHA is extending the deadline for submitting notices of intention to appear at the hearings by 30 days to December 12, 2013; the deadline for submitting written comments and testimony by 47 days to January 27, 2014; and the commencement of the hearings by two weeks to now begin March 18, 2014 in order to allow additional time for interested parties to review the proposed measures; submit their notices of intention to appear, comments and testimony; and prepare for the public hearings.

Authority and Signature: This document was prepared under the direction of David Michaels, Ph.D., MPH, Assistant Secretary of Labor for Occupational Safety and Health, U.S. Department of Labor, 200 Constitution Avenue NW., Washington, DC 20210, pursuant to sections 4, 6, and 8 of the Occupational Safety and Health Act of 1970 (29 U.S.C. 653, 655, 657); section 107 of the Contract Work Hours and Safety Standards Act (the Construction Safety Act) (40 U.S.C. 333); section 41 of the Longshore and Harbor Worker's Compensation Act (33 U.S.C. 941); Secretary of Labor's Order No. 1–2012 (77 FR 3912, January 25, 2012); and 29 CFR part 1911.

Signed at Washington, DC, on October 25, 2013.

David Michaels,

Assistant Secretary of Labor for Occupational Safety and Health.

[FR Doc. 2013–25863 Filed 10–30–13; 8:45 am]

BILLING CODE 4510–26–P

ARCHITECTURAL AND TRANSPORTATION BARRIERS COMPLIANCE BOARD

36 CFR Part 1192

[Docket No. ATBCB–2013–0001]

RIN 3014–AA42

Rail Vehicles Access Advisory Committee

AGENCY: Architectural and Transportation Barriers Compliance Board.

ACTION: Notice of advisory committee meeting.

SUMMARY: The Rail Vehicles Access Advisory Committee (Committee) will hold its first meeting. We, the Architectural and Transportation Barriers Compliance Board (Access Board), established the Committee to advise us on revising and updating our accessibility guidelines issued pursuant to the Americans with Disabilities Act for transportation vehicles that operate on fixed guideway systems (e.g., rapid rail, light rail, commuter rail, intercity rail, and high speed rail). The original first meeting, previously scheduled for October 15 and 16, 2013, did not occur due to the federal government shutdown.

DATES: The Committee will meet on November 13, 2013, from 10:00 a.m. to 5:00 p.m. and on November 14, 2013, from 9:00 a.m. to 3:00 p.m.

ADDRESSES: The meeting will be held at the Access Board Conference Room, 1331 F Street NW., Suite 800, Washington, DC 20004–1111. Call-in information and a communication access real-time translation (CART) web streaming link will be posted on the Access Board's Rail Vehicles Access Advisory Committee Web site page at *www.access-board.gov/rvaac.*

FOR FURTHER INFORMATION CONTACT: Paul Beatty, Office of Technical and Information Services, Access Board, 1331 F Street NW., Suite 1000, Washington, DC 20004–1111. Telephone number (202) 272–0012 (Voice); (202) 272–0072 (TTY). Electronic mail address: *rvaac@access-board.gov.*

SUPPLEMENTARY INFORMATION: On May 23, 2013, we published a notice establishing a Rail Vehicles Access Advisory Committee (Committee) to make recommendations to us on matters associated with revising and updating our accessibility guidelines issued pursuant to the Americans with Disabilities Act for transportation vehicles that operate on fixed guideway systems (e.g., rapid rail, light rail, commuter rail, intercity rail, and high speed rail). See 78 FR 30828 (May 23, 2013).

The Committee will hold its first meeting on November 13, 2013, from 10:00 a.m. to 5:00 p.m. and on November 14, 2013, from 9:00 a.m. to 3:00 p.m. (the original first meeting, previously scheduled in October 15 and 16, 2013, did not occur due to the federal government shutdown). The agenda for the November meeting includes initial remarks, introduction of Committee members, consideration of the Committee's charter and operating procedures, discussion of administrative issues (including establishment of future meeting dates and consideration of adding additional committee members), and discussion of issues for potential consideration by the Committee. The preliminary meeting agenda, along with information about the Committee, is available on our Web site (*www.access-board.gov/rvaac*).

Committee meetings will be open to the public and interested persons can attend the meetings and communicate their views. Members of the public will have opportunities to address the Committee on issues of interest to them during public comment periods scheduled on each day of the meeting. Members of groups or individuals who are not members of the Committee may also have the opportunity to participate in subcommittees if subcommittees are formed.

The meetings will be accessible to persons with disabilities. An assistive listening system, communication access real-time translation (CART), and sign language interpreters will be provided. Persons attending the meetings are requested to refrain from using perfume, cologne, and other fragrances for the comfort of other participants (see *www.access-board.gov/the-board/policies/fragrance-free-environment* for more information).

Persons wishing to provide handouts or other written information to the Committee are requested to provide electronic formats to Paul Beatty via email at least two business days prior to the meetings so that alternate formats can be distributed to Committee members.

David M. Capozzi,

Executive Director.

[FR Doc. 2013–25383 Filed 10–30–13; 8:45 am]

BILLING CODE 8150–01–P

DEPARTMENT OF DEFENSE

Defense Acquisition Regulations System

48 CFR Parts 212, 225, 237, 242, and 252

RIN 0750–AI01

Defense Federal Acquisition Regulation Supplement: Contractor Personnel Supporting U.S. Armed Forces Deployed Outside the United States (DFARS Case 2013–D015)

AGENCY: Defense Acquisition Regulations System, Department of Defense (DoD).

ACTION: Proposed rule.

SUMMARY: DoD is proposing to amend the Defense Federal Acquisition Regulation Supplement (DFARS) to align it with revisions to the DoD Instruction on operational contract support.

DATES: Comments on the proposed rule should be submitted in writing to the address shown below on or before

December 30, 2013, to be considered in the formation of a final rule.

ADDRESSES: Submit comments identified by DFARS Case 2013–D015, using any of the following methods:

○ *Regulations.gov: http://www.regulations.gov.* Submit comments via the Federal eRulemaking portal by entering ''DFARS Case 2013–D015'' under the heading ''Enter keyword or ID'' and selecting ''Search.'' Select the link ''Submit a Comment'' that corresponds with ''DFARS Case 2013–D015.'' Follow the instructions provided at the ''Submit a Comment'' screen. Please include your name, company name (if any), and ''DFARS Case 2013–D015'' on your attached document.

○ *Email: dfars@osd.mil.* Include DFARS Case 2013–D015 in the subject line of the message.

○ *Fax:* 571–372–6094.

○ *Mail:* Defense Acquisition Regulations System, Attn: Ms. Meredith Murphy, OUSD(AT&L)DPAP/DARS, Room 3B855, 3060 Defense Pentagon, Washington, DC 20301–3060.

Comments received generally will be posted without change to *http://www.regulations.gov,* including any personal information provided. To confirm receipt of your comment(s), please check *www.regulations.gov,* approximately two to three days after submission to verify posting (except allow 30 days for posting of comments submitted by mail).

FOR FURTHER INFORMATION CONTACT: Ms. Meredith Murphy, Defense Acquisition Regulations System, OUSD (AT&L)DPAP/DARS, Room 3B855, 3060 Defense Pentagon, Washington, DC 20301–3060. Telephone 571–372–6098; facsimile 571–372–6101.

SUPPLEMENTARY INFORMATION:

I. Background

DoD is proposing to amend the DFARS to revise and update the prescription and the clause at DFARS 252.225–7040, currently titled ''Contractor Personnel Authorized to Accompany U.S. Armed Forces Deployed Outside the United States,'' to align it with the changes in applicability, terminology, and other revisions made by Department of Defense Instruction (DoDI) 3020.41, entitled ''Operational Contract Support (OCS).'' The DoDI was published as an interim rule for public comment and subsequently was published as a final rule on July 1, 2012.

The revisions to DoDI 3020.41 establish policy, assign responsibilities, and provide procedures for OCS, including OCS program management, contract support integration, and integration of defense contractor personnel into contingency operations outside the United States. Additions to, and clarifications of, terminology aid in determining which groups qualify for different types of Government support and are based on improvements in practices and lessons learned in recent contingency operations.

II. Discussion and Analysis

New definitions are proposed to be added to the clause at 252.225–7040. These include ''contractors authorized to accompany the Force'' (CAAF), ''non-CAAF,'' and ''designated reception site.'' These definitions are considered important clarifications as to requirements, status, and entitlement to use facilities. One new element of the proposed rule is the statement at paragraph (b)(3) of the clause that, ''when armed for personal protection, contractor personnel are only authorized to use force for personal protection.'' This would not be a new policy; rather, it would be a clear, concise statement of the existing policy.

The new clause title is proposed to be ''Contractor Personnel Supporting U.S. Armed Forces Deployed Outside the United States,'' and the new clause prescription, at DFARS 225.7402–5(a), adds ''As directed by the Secretary of Defense'' to the list of circumstances in which the clause is applicable.

The clause addresses at paragraph (c) the types of support available for CAAF personnel and the requirement to have a letter of authorization signed by the contracting officer prior to deployment for each CAAF. In the past, the provision of non-emergency medical and dental care to CAAF personnel has generated considerable confusion. The proposed revision to paragraph (c) would make it clear that only emergency medical and dental care will be provided and only when the CAAF individual is injured while supporting applicable operations. In certain cases, non-emergency care may be provided by field hospital staff, but the contractor will be billed for that non-emergency care.

The predeployment requirements for CAAF personnel would be clarified in paragraph (e) of the clause. In the past, there was some ambiguity about which requirements could be fulfilled once the individual was in theater and which requirements had to be completed prior to deployment, i.e. during predeployment screening.

The requirements for and use of personnel data are covered at paragraph (g) of the clause. Contractors are required to use the Synchronized Predeployment and Operational Tracker (SPOT) system to enter and maintain data on their CAAF and non-CAAF personnel (as designated by USD (AT&L) or the combatant commander) supporting deployed U.S. Armed Forces outside the United States. The purpose of SPOT is to provide the Combatant Commander with accurate, real-time information on all personnel within specified geographic combatant command operations areas. In the past, some contractors did not maintain current information on their personnel in SPOT. The proposed revisions to paragraph (e) of the clause would make a contractor's on-going SPOT maintenance requirements clear and specific.

III. Executive Orders 12866 and 13563

Executive Orders (E.O.s) 12866 and 13563 direct agencies to assess all costs and benefits of available regulatory alternatives and, if regulation is necessary, to select regulatory approaches that maximize net benefits (including potential economic, environmental, public health and safety effects, distributive impacts, and equity). E.O. 13563 emphasizes the importance of quantifying both costs and benefits, of reducing costs, of harmonizing rules, and of promoting flexibility. This is a significant regulatory action and, therefore, was subject to review under section 6(b) of E.O. 12866, Regulatory Planning and Review, dated September 30, 1993. This rule is not a major rule under 5 U.S.C. 804.

IV. Regulatory Flexibility Act

DoD does not expect this proposed rule to have a significant economic impact on a substantial number of small entities within the meaning of the Regulatory Flexibility Act, 5 U.S.C. 601, *et seq.,* because it impacts only businesses providing direct support to U.S. Armed Forces that are deployed outside the United States. However, an initial regulatory flexibility analysis has been performed and is summarized as follows:

This rule proposes to update the clause at DFARS 252.225–7040 and its prescription to align the DFARS with the changes in applicability, terminology, and other revisions made by Department of Defense Instruction (DoDI) 3020.41, entitled Operational Contract Support (OCS). The DoDI ''establishes policy, assigns responsibilities, and provides procedures for OCS, including OCS program management, contract support integration, and integration of defense contractor personnel into contingency

operations outside the United States . . .'' (DoDI 3020.41, section 1.a.).

The proposed rule will impact small businesses with personnel who provide direct support to U.S. Armed Forces personnel deployed outside the United States. Given the concerted effort by the United States to procure products and services from local vendors (see, *e.g.,* sections 841 and 842 of the National Defense Authorization Act for Fiscal Year 2013, entitled ''Extension and Expansion of Authority to Acquire Products and Services Produced in Countries Along a Major Route of Supply to Afghanistan'' and ''Limitation on Authority to Acquire Products and Services Produced in Afghanistan,'' respectively.), the impact on U.S. small businesses should be minimal. DoD estimated, in its Paperwork Reduction Act estimate for SPOT, that up to 1,300 companies ultimately could be supporting U.S. Armed Forces deployed outside the United States. Approximately 20 percent of these companies are non-U.S. firms (and therefore are not categorized as either small or large), and approximately 20 percent of the U.S. companies are small businesses, i.e. approximately 200 small businesses.

However, for those small businesses that do have personnel deployed in support of U.S. Armed Forces deployed outside the United States, the recordkeeping and reporting requirements are minimal. The specific requirements are included in paragraph (g) of the clause at DFARS 252.225–7040. The contractor is required to use the web-based Synchronized Predeployment and Operational Tracker (SPOT) system to enter and maintain the data for its CAAF and designated non-CAAF personnel supporting deployed U.S. Armed Forces outside the United States. The purpose of the SPOT system is to enable DoD to keep track of all persons deployed in contingency zones. The information must be entered in SPOT prior to deployment and must be updated during the performance period of the contract as necessary to maintain accurate, up-to-date information. Changes to status of individual contractor personnel relating to their in-theater arrival date and their duty location, to include closing out the deployment with their proper status (e.g. mission complete, killed, wounded) is annotated within the SPOT database.

The rule does not duplicate, overlap, or conflict with any other Federal rules. The requirement to use the SPOT database is not new to this case. It has been in place for several years and is applied to all sizes of businesses that have personnel deployed in a contingency operation. The SPOT database can be accessed with a laptop and is user friendly to encourage real-time updates of the information provided.

DoD invites comments from small business concerns and other interested parties on the expected impact of this rule on small entities.

DoD will also consider comments from small entities concerning the existing regulations in subparts affected by this rule in accordance with 5 U.S.C. 610. Interested parties must submit such comments separately and should cite 5 U.S.C. 610 (DFARS Case 2013–D015), in correspondence.

V. Paperwork Reduction Act

The rule contains information collection requirements that require the approval of the Office of Management and Budget under the Paperwork Reduction Act (44 U.S.C chapter 35; however, these changes to the DFARS do not impose additional information collection requirements to the paperwork burden previously approved under OMB Control Number 0704–0460, entitled ''Synchronized Predeployment and Operational Tracker (SPOT) System,'' in accordance with the Paperwork Reduction Act (44 U.S.C. chapter 35).

List of Subjects in 48 CFR Parts 212, 225, 237, 242, and 252

Government procurement.

Manuel Quinones,

Editor, Defense Acquisition Regulations System.

Therefore, DoD proposes to amend 48 CFR parts 212, 225, 237, 242, and 252 as follows:

■ 1. The authority citation for 48 CFR parts 212, 225, 237, 242, and 252 continues to read as follows:

Authority: 41 U.S.C. 1303 and 48 CFR chapter 1.

PART 212—ACQUISITION OF COMMERCIAL ITEMS

■ 2. Section 212.301 is amended by revising paragraph (f)(xxxix) to read as follows:

212.301 Solicitation provisions and contract clauses for the acquisition of commercial items.

(f) * * *

(xxxix) Use the clause at 252.225–7040, Contractor Personnel Supporting U.S. Armed Forces Deployed Outside the United States, as prescribed in 225.7402–5(a).

* * * * *

PART 225—FOREIGN ACQUISITION

225.7402 [Amended]

■ 3. Section 225.7402 heading is amended by removing the phrase ''authorized to accompany'' and adding the word ''supporting'' in its place.

■ 4. Section 225.7402–2 is revised to read as follows:

225.7402–2 Definition.

Designated operational area is defined in the clause at 252.225–7040. See PGI 225.7402–2 for additional information on designated operational areas.

■ 4. Section 225.7402–5(a) is revised to read as follows:

225.7402–5 Contract clauses.

(a) Use the clause at 252.225–7040, Contractor Personnel Supporting U.S. Armed Forces Deployed Outside the United States, instead of the clause at FAR 52.225–19, Contractor Personnel in a Designated Operational Area or Supporting a Diplomatic or Consular Mission Outside the United States, in solicitations and contracts, including solicitations and contracts using FAR part 12 procedures for the acquisition of commercial items, for performance in a designated operational area that authorize contractor personnel to support U.S. Armed Forces deployed outside the United States in—

(1) Contingency operations;

(2) Humanitarian assistance operations;

(3) Other peace operations consistent with Joint Publication 3–07.3;

(4) Other military operations or military exercises, when designated by the combatant commander; or

(5) As directed by the Secretary of Defense.

* * * * *

PART 237—SERVICE CONTRACTING

237.171–4 [Amended]

■ 5. Section 237.171–4(a) is amended by removing ''a Force'' and adding ''U.S. Armed Forces'' in its place.

PART 242—CONTRACT ADMINISTRATION AND AUDIT SERVICES

242.302 [Amended]

■ 6. Section 242.302(S–72) is amended by removing the phrase ''Authorized to Accompany'' and adding ''Supporting'' in its place.

PART 252—SOLICITATION PROVISIONS AND CONTRACT CLAUSES

■ 7. Section 252.225–7040 is amended by—

■ a. Removing from the section heading the phrase ''Authorized to Accompany'' and adding ''Supporting'' in its place;
■ b. Removing from the clause title the phrase ''Authorized to Accompany'' and adding in its place ''Supporting;
■ c. Removing the clause date (FEB 2013) and adding ''(OCT 2013)''in its place;
■ d. Adding to paragraph (a), in alphabetical order, the definitions ''contractors authorized to accompany the Force'', ''designated reception site'', and ''non-CAAF'';
■ e. Revising paragraph (b);
■ f. Amending paragraph (c)(1)(ii) by removing the word ''shall'' and adding ''will'' in its place;
■ g. Revising paragraph (c)(2)(i);
■ h. Amending paragraph (c)(2)(iii) by removing the phrase ''unless specified elsewhere in this contract'';
■ i. Removing paragraph (c)(3);
■ j. Redesignating paragraph (c)(4) as (c)(3) and adding a new paragraph (c)(4);
■ k. Amending paragraph (d)(1) introductory text by removing the phrase ''authorized to accompany'' and adding ''supporting'' in its place;
■ l. Amending paragraph (d)(3) introductory text by removing the phrase ''contractor employees accompanying'' and adding ''CAAF supporting'' in its place;
■ m. Amending paragraph (e)(1) introductory text by removing the phrase ''personnel authorized to accompany U.S. Armed Forces'' and adding ''CAAF'' in its place;
■ n. Revising paragraph (e)(1)(ii);
■ o. Amending paragraph (e)(1)(iii) by removing the last sentence in the paragraph and adding in its place ''Contractor personnel shall return all U.S. Government issued identification, to include the Common Access Card, to appropriate U.S. Government authorities at the end of their deployment.'';
■ p. Amending paragraph (e)(1)(iv) by removing ''Contractor personnel'' and adding ''For this purpose, CAAF'' in its place and adding the word ''contractor'' after the word ''non-DoD'';
■ q. Adding paragraphs (e)(2)(v) and (vi);
■ r. Amending paragraph (f) introductory text by removing the words ''Deployed Contractor'' and adding ''(CAAF)'' in its place;
■ s. Amending paragraph (f)(3) by—
■ i. Removing the word ''Joint'' and adding ''designated'' in its place;
■ ii. Removing the words ''Center (JRC)'' and adding ''site (DRS)'' in its place; and
■ iii. Removing ''JRC'' and adding ''DRS'' in its place.
■ t. Revising paragraph (g);
■ u. Revising paragraph (h);
■ v. Amending paragraph (j)—
■ i. In paragraph (j)(1), by removing ''authorized to carry weapons, the request'' and adding ''authorized to carry weapons for personal protection, the request'' in its place, and removing '', paragraph 6.3.4.1 or, if the contract is for security services, paragraph 6.3.5.3'';
■ ii. By adding paragraphs (j)(3)(iv) and (v);
■ w. Revising paragraph (o); and
■ x. Revising paragraph (q).

The revisions and additions read as follows:

252.225–7040 Contractor Personnel Supporting U.S. Armed Forces Deployed Outside the United States.

* * * * *

(a) * * *

Contractors authorized to accompany the Force, or *CAAF,* means contractor personnel, including all tiers of subcontractor personnel, who are authorized to accompany U.S. Armed Forces in applicable operations and have been afforded CAAF status through a letter of authorization. CAAF generally include all U.S. citizen and third-country national employees not normally residing within the operational area whose area of performance is in the direct vicinity of U.S. Armed Forces and who routinely are co-located with the U.S. Armed Forces (especially in non-permissive environments). Personnel co-located with U.S. Armed Forces shall be afforded CAAF status through a letter of authorization. In some cases, Combatant Commander subordinate commanders may designate mission-essential host nation (HN) or local national (LN) contractor employees (e.g., interpreters) as CAAF. CAAF includes contractors previously identified as contractors deploying with the U.S. Armed Forces. CAAF status does not apply to contractor personnel in support of applicable operations within the boundaries and territories of the United States.

* * * * *

Designated reception site means the designated place responsible for the reception, staging, integration, and onward movement of contractors deploying during a contingency. The designated reception site includes assigned joint reception centers and other Service or private reception sites.

* * * * *

Non-CAAF means personnel who are not designated as CAAF, such as local national (LN) employees and non-LN employees who are permanent residents in the operational area or third-country nationals not routinely residing with U.S. Armed Forces (and third-country national expatriates who are permanent residents in the operational area) who perform support functions away from the close proximity of, and do not reside with, U.S. Armed Forces. Government-furnished support to non-CAAF is typically limited to force protection, emergency medical care, and basic human needs (e.g., bottled water, latrine facilities, security, and food when necessary) when performing their jobs in the direct vicinity of U.S. Armed Forces. Non-CAAF status does not apply to contractor personnel in support of applicable operations within the boundaries and territories of the United States.

* * * * *

(b) *General.* (1) This clause applies when Contractor personnel performing in a designated operational area are supporting U.S. Armed Forces deployed outside the United States in—

(i) Contingency operations;

(ii) Humanitarian assistance operations;

(iii) Other peace operations;

(iv) Other military operations or military exercises, when designated by the Combatant Commander; or

(v) As directed by the Secretary of Defense.

(2) Contract performance in support of U.S. Armed Forces deployed outside the United States may require work in dangerous or austere conditions. Except as otherwise provided in the contract, the Contractor accepts the risks associated with required contract performance in such operations.

(3) When authorized in accordance with paragraph (j) of this clause to carry arms for personal protection, Contractor personnel are only authorized to use force for individual defense.

(4) Unless immune from host nation jurisdiction by virtue of an international agreement or international law, inappropriate use of force by contractor personnel authorized to accompany the U.S. Armed Forces can subject such personnel to United States or host nation prosecution and civil liability (see paragraphs (d) and (j)(3) of this clause).

(5) Service performed by Contractor personnel subject to this clause is not active duty or service under 38 U.S.C. 106 note.

(c) * * *

(2)(i) Generally, CAAF will be afforded emergency medical and dental care if injured while supporting applicable operations. Additionally, non-CAAF employees who are injured while in the vicinity of U.S. Armed Forces will normally receive emergency medical and dental care. Emergency medical and dental care includes medical care situations in which life, limb, or eyesight is jeopardized. Examples of emergency medical and dental care include examination and initial treatment of victims of sexual assault; refills of prescriptions for life-dependent drugs; repair of broken bones, lacerations, infections; and traumatic injuries to the dentition. Hospitalization will be limited to stabilization and short-term medical treatment with an emphasis on return to duty or placement in the patient movement system.

* * * * *

(4) Unless specified elsewhere in this contract, the Contractor is responsible for all other support required for its personnel engaged in the designated operational area under this contract.

* * * * *

(e) * * *

(1) * * *

(ii) All CAAF deploying in support of an applicable operation are medically, dentally, and psychologically fit for deployment and

performance of their contracted duties. All CAAF must meet the minimum medical screening requirements, including theater-specific medical qualifications as established by the geographic Combatant Commander (as posted to the Geographic Combatant Commander's Web site or other venue) and have received all required immunizations as specified in the contract. During predeployment processing, the Government will provide, at no cost to the Contractor, any military-specific immunizations and/or medications not available to the general public. All other immunizations must be obtained prior to arrival at the deployment center. CAAF and selected non-CAAF must bring to the operational area a current copy of the Public Health Service Form 791, ''International Certificate of Vaccination.''

* * * * *

(2) * * *

(v) Such employees are required to report offenses alleged to have been committed by or against Contractor personnel to appropriate investigative authorities.

(vi) Such employees will be provided victim and witness protection and assistance.

* * * * *

(g) *Personnel data.* (1) The Contractor shall use the Synchronized Predeployment and Operational Tracker (SPOT) web-based system, to enter and maintain the data for all CAAF and, as designated by USD(AT&L) or the Combatant Commander, non-CAAF personnel supporting U.S. Armed Forces deployed outside the United States as specified in paragraph (b)(1) of this clause.

(2) The Contractor shall enter the required information about their contractor personnel prior to deployment and shall continue to use the SPOT web-based system at *https://spot.altess.army.mil/privacy.aspx* to maintain accurate, up-to-date information throughout the deployment for all Contractor personnel. Changes to status of individual Contractor personnel relating to their in-theater arrival date and their duty location, to include closing out the deployment with their proper status (e.g., mission complete, killed, wounded) shall be annotated within the SPOT database in accordance with the timelines established in the SPOT business rules.

(h) *Contractor personnel.* (1) The Contracting Officer may direct the Contractor, at its own expense, to remove and replace any Contractor personnel who jeopardize or interfere with mission accomplishment or who fail to comply with or violate applicable requirements of this contract. Such action may be taken at the Government's discretion without prejudice to its rights under any other provision of this contract, including the Termination for Default clause.

(2) The Contractor shall identify all personnel who occupy a position that the Contracting Officer has designated as mission essential and ensure the continuity of essential Contractor services during designated operations.

(3) The Contractor shall ensure that Contractor personnel follow the guidance at paragraph (e)(2)(v) of this clause and any specific Combatant Commander guidance on reporting offenses alleged to have been committed by or against Contractor personnel to appropriate investigative authorities.

* * * * *

(j) * * *

(3) * * *

(iv) Comply with applicable Combatant Commander and local commander force-protection policies.

(v) Understand that the inappropriate use of force could subject them to U.S. or host-nation prosecution and civil liability.

* * * * *

(o) *Mortuary affairs.* Contractor personnel who die while in support of the U.S. Armed Forces shall be covered by the DoD mortuary affairs program as described in DoD Directive 1300.22, Mortuary Affairs Policy, and DoD Instruction 3020.41, Operational Contractor Support.

* * * * *

(q) *Subcontracts.* The Contractor shall incorporate the substance of this clause, including this paragraph (q), in all subcontracts when subcontractor personnel are supporting U.S. Armed Forces deployed outside the United States in—

(1) Contingency operations;

(2) Humanitarian assistance operations;

(3) Other peace operations;

(4) Other military operations or military exercises, when designated by the Combatant Commander; or

(5) As directed by the Secretary of Defense.

(End of clause)

[FR Doc. 2013–25731 Filed 10–30–13; 8:45 am]

BILLING CODE 5001–06–P

DEPARTMENT OF THE INTERIOR

Fish and Wildlife Service

50 CFR Part 17

[Docket No. FWS–R6–ES–2012–0107; 4500030113]

RIN 1018–AY26

Endangered and Threatened Wildlife and Plants; Threatened Status for the Distinct Population Segment of the North American Wolverine in the Contiguous United States

AGENCY: Fish and Wildlife Service, Interior.

ACTION: Proposed rule; reopening of comment period.

SUMMARY: We, the U.S. Fish and Wildlife Service (Service), are reopening the public comment period on the proposed rule to list the distinct population segment (DPS) of the North American wolverine (*Gulo gulo luscus*) in the contiguous United States as threatened under the Endangered Species Act of 1973, as amended. The proposed rule was published in the **Federal Register** on February 4, 2013. We are reopening the comment period to allow the public an additional opportunity to review and comment on the proposed rule, as well as the peer review and public comments that were submitted during the first comment period. Comments already submitted need not be resubmitted, as they will be fully considered in preparation of the final rule, which we intend to issue by February 4, 2014, as required by the Endangered Species Act.

DATES: We will accept public comments until December 2, 2013. Comments submitted electronically using the Federal eRulemaking Portal (see **ADDRESSES**, below) must be received by 11:59 p.m. Eastern Time on that date.

ADDRESSES: *Document availability:* You may obtain a copy of the proposed rule on the Internet at *http://www.regulations.gov* at Docket No. FWS–R6–ES–2012–0107 or at *http://www.fws.gov/mountain-prairie/species/mammals/wolverine/.* All comments received during the first comment period, as well as supporting documentation we used in preparing the proposed rule, can be found at *http://www.regulations.gov* in Docket No. FWS–R6–ES–2012–0107. Comments and materials we receive during this reopened comment period will also be available for public inspection on *http://www.regulations.gov,* or by appointment, during normal business hours, at the U.S. Fish and Wildlife Service, Montana Field Office (see **FOR FURTHER INFORMATION CONTACT**).

Comment submission: You may submit comments by one of the following methods:

(1) Electronically: Go to the Federal eRulemaking Portal: *http://www.regulations.gov.* In the Search box, enter FWS–R6–ES–2012–0107, which is the docket number for this rulemaking action. You may submit a comment by clicking on ''Comment Now!''

(2) *By hard copy:* Submit by U.S. mail or hand-delivery to: Public Comments Processing, Attn: FWS–R6–ES–2012–0107; Division of Policy and Directives Management; U.S. Fish and Wildlife Service; 4401 N. Fairfax Drive, MS 2042–PDM; Arlington, VA 22203.

We request that you send comments only by the methods described above. We will post all comments on *http://www.regulations.gov.* This generally means that we will post any personal information you provide us (see the Information Requested section below for more details).

FOR FURTHER INFORMATION CONTACT: Jodi Bush, Field Office Supervisor, U.S. Fish and Wildlife Service, Montana Field Office, 585 Shepard Way, Helena, MT 59601; telephone 406–449–5225;

facsimile 406–449–5339. If you use a telecommunications device for the deaf (TDD), call the Federal Information Relay Service (FIRS) at 800–877–8339.

SUPPLEMENTARY INFORMATION:

Background

On February 4, 2013, we published in the **Federal Register** a proposed rule to list the distinct population segment of the North American wolverine (78 FR 7864) under the Endangered Species Act of 1973, as amended (Act) (16 U.S.C. 1531 et seq.). The proposed rule had a 90-day comment period, which ended May 6, 2013. During the comment period, we received several comments from the public, States, and peer reviewers that questioned our analysis of the best available scientific information that we used in the proposed rule. Specifically, some of the peer reviewers and States disagreed with our determination that wolverines are dependent on persistent late spring snow.

Some commenters thought that wolverine distribution was not restricted by access to snow dens and that wolverine distribution and behavior was better explained by other hypotheses, such as the need for cold places to cache food. They also disagreed with our interpretation of the scientific information regarding the likely effects of climate change on wolverines in the future. Our assessment of climate change impacts on wolverines used wolverines' snow dependence and suitable wolverine habitat and climate change models to predict future impacts of climate change on wolverine habitat suitability. Some of the commenters disagreed with this assessment and suggested that if the model of wolverine habitat that we used was not scientifically supported, then any analysis of climate change impacts to wolverines based on that habitat model may be flawed. Other peer reviewers were supportive of our interpretations of this information and provided analyses to support their views.

We are reopening the comment period to seek additional public comment on the proposed rule and on the issues outlined below. To ensure the public has an adequate opportunity to review and comment on the new information submitted to us on the proposed rule, we are reopening the comment period until the date specified above in **DATES**. We intend to issue a final determination on this rule by February 4, 2014.

The information provided by the peer-reviewers can be found at our peer-review Web site at *http://www.fws.gov/mountain-prairie/science/peer_review.cfm* and also at the Federal eRulemaking Portal: *http://www.regulations.gov.* Individual comments may be read and specific comments may be found using the Search box function at that Web site.

Information Requested

We will accept written comments and information during this reopened comment period and will consider information and recommendations from all interested parties. If you previously submitted comments or information on the proposed rule, please do not resubmit them. We have incorporated them into the public record, and we will fully consider them in the preparation of our final determination. We intend that any final action resulting from this proposal be based on the best scientific and commercial data available and be as accurate and as effective as possible.

We request comments or information from the public, other concerned governmental agencies, Native American tribes, the scientific community, industry, or any other interested parties concerning this proposed rule. We particularly seek comments concerning:

(1) Whether wolverines are dependent on cold and snowy conditions and habitat that closely approximates the area covered by snow until late spring (May 15).

a. Whether wolverines are dependent on such habitats defined by persistent spring snow for feeding, breeding, and sheltering.

b. Whether the projected impacts of climate change will result in loss of habitat for wolverines.

(2) The factors that are the basis for making a listing determination for a species under section 4(a) of the Act, which are:

a. The present or threatened destruction, modification, or curtailment of its habitat or range;

b. Overutilization for commercial, recreational, scientific, or educational purposes;

c. Disease or predation;

d. The inadequacy of existing regulatory mechanisms; or

e. Other natural or manmade factors affecting its continued existence.

(3) Information regarding the threats we identified in the proposed rule, or threats to the species that we may have overlooked in the proposed rule. Threats we identified were:

a. Habitat loss due to climate change;

b. Regulated trapping of wolverines and trapping of wolverines incidental to trapping for other species; and

c. Inbreeding and related genetic and demographic effects of small and isolated populations.

Please include sufficient information with your submission (such as scientific journal articles or other publications) to allow us to verify any scientific or commercial information you include. Please note that submissions merely stating support for or opposition to the action under consideration without providing supporting information, although noted, will not be considered in making a determination, as section 4(b)(1)(A) of the Act directs that determinations as to whether any species is a threatened or endangered species must be made ''solely on the basis of the best scientific and commercial data available.''

You may submit your comments and materials concerning this proposed rule by one of the methods listed above in **ADDRESSES**. We request that you send comments only by the methods described in **ADDRESSES**.

If you submit information via *http://www.regulations.gov,* your entire submission—including any personal identifying information—will be posted on the Web site. If your submission is made via a hardcopy that includes personal identifying information, you may request at the top of your document that we withhold this information from public review. However, we cannot guarantee that we will be able to do so. We will post all hardcopy submissions on *http://www.regulations.gov.*

Authority

The authority for this action is the Endangered Species Act of 1973, as amended (16 U.S.C. 1531 *et seq.*).

Dated: October 23, 2013.

Stephen Guertin,

Acting Director, U.S. Fish and Wildlife Service.

[FR Doc. 2013–25849 Filed 10–30–13; 8:45 am]

BILLING CODE 4310–55–P

DEPARTMENT OF COMMERCE

National Oceanic and Atmospheric Administration

50 CFR Part 224

[Docket No. 120705210–3872–02]

RIN 0648–XC101

Endangered and Threatened Wildlife and Plants; 12-Month Finding and Proposed Endangered Listing of Five Species of Sturgeons Under the Endangered Species Act

AGENCY: National Marine Fisheries Service (NMFS), National Oceanic and Atmospheric Administration (NOAA), Commerce.

ACTION: Proposed rule; 12-month petition finding; request for comments.

SUMMARY: We, NMFS, have completed comprehensive status reviews under the Endangered Species Act (ESA) of five species of foreign sturgeons in response to a petition. We have determined, based on the best scientific and commercial data available and after taking into account efforts being made to protect the species, that *Acipenser naccarii* (Adriatic sturgeon), and *A. sturio* (European sturgeon) in Western Europe, *A. sinensis* (Chinese sturgeon) in the Yangtze River basin, and *A. mikadoi* (Sakhalin sturgeon) and *Huso dauricus* (Kaluga sturgeon) in the Amur River Basin/Sea of Japan/Sea of Okhotsk region, meet the definition of endangered species. We are not proposing to designate critical habitat because the geographical areas occupied by these species are entirely outside U.S. jurisdiction and we have not identified any unoccupied areas that are currently essential to the conservation of any of these species. We are soliciting information that may be relevant to these listing and critical habitat determinations, especially on the status and conservation of these species.

DATES: Comments on this proposed rule must be received by December 30, 2013. Public hearing requests must be made by December 16, 2013.

ADDRESSES: You may submit comments on this document, identified by NOAA–NMFS–2012–0142, by any of the following methods:

- *Electronic Submissions:* Submit all electronic public comments via the Federal eRulemaking Portal. Go to *www.regulations.gov/#!docketDetail;D=NOAA-NMFS-2012-0142.* click the ''Comment Now'' icon, complete the required fields, and enter or attach your comments.
- *Fax:* 301–713–4060; Attn: Dwayne Meadows.
- *Mail:* Submit written comments to Dwayne Meadows, NMFS Office of Protected Resources (F/PR3), 1315 East West Highway, Silver Spring, MD 20910, USA.

Instructions: You must submit comments by one of the above methods to ensure that we receive, document, and consider them. Comments sent by any other method, to any other address or individual, or received after the end of the comment period may not be considered. All comments received are a part of the public record and will generally be posted for public viewing on *http://www.regulations.gov* without change. All personal identifying information (e.g., name, address, etc.), confidential business information, or otherwise sensitive information submitted voluntarily by the sender will be publicly accessible. We will accept anonymous comments (enter ''N/A'' in the required fields if you wish to remain anonymous). Attachments to electronic comments will be accepted in Microsoft Word, Excel, or Adobe PDF file formats only.

You can obtain the petition, the proposed rule, and the list of references electronically on our NMFS Web site at *http://www.nmfs.noaa.gov/pr/.*

FOR FURTHER INFORMATION CONTACT: Dr. Dwayne Meadows, NMFS, Office of Protected Resources, (301) 427–8403.

SUPPLEMENTARY INFORMATION:

Background

On March 12, 2012, we received a petition from the WildEarth Guardians and Friends of Animals to list 15 species of sturgeon (*Acipenser naccarii*—Adriatic sturgeon; *A. sturio*—European sturgeon; *A. gueldenstaedtii*—Russian sturgeon; *A. nudiventris*—ship sturgeon/bastard sturgeon/fringebarbel sturgeon/spiny sturgeon/thorn sturgeon; *A. persicus*—Persian sturgeon; *A. stellatus*—stellate sturgeon/star sturgeon; *A. baerii*—Siberian sturgeon; *A. dabryanus* —Yangtze sturgeon/Dabry's sturgeon/river sturgeon; *A. sinensis*—Chinese sturgeon; *A. mikadoi*—Sakhalin sturgeon; *A. schrenckii*—Amur sturgeon; *Huso dauricus*—Kaluga sturgeon; *Pseudoscaphirhynchus fedtschenkoi*—Syr-darya shovelnose sturgeon/Syr darya sturgeon; *P. hermanni*—dwarf sturgeon/Little Amu-darya shovelnose/little shovelnose sturgeon/Small Amu-dar shovelnose sturgeon; *P. kaufmanni*—false shovelnose sturgeon/Amu darya shovelnose sturgeon/Amu darya sturgeon/big Amu darya shovelnose/large Amu-dar shovelnose sturgeon/shovelfish) as threatened or endangered under the Endangered Species Act (ESA). As a result of subsequent discussions between us and the U.S. Fish and Wildlife Service (FWS), we have determined that 10 of the 15 petitioned sturgeon species are not marine or anadromous and thus not within our jurisdiction; therefore, those 10 species are the responsibility of the FWS, which will conduct the required listing analyses. We did determine that *Acipenser naccarii, A. sturio, A. sinensis, A. mikadoi* and *Huso dauricus* are within our jurisdiction. On August 27, 2012, we published a 90-day finding in the **Federal Register** (77 FR 51767) that found that listing these five species under the ESA may be warranted, and announced the initiation of status reviews for each species.

We are responsible for determining whether species are threatened or endangered under the ESA (16 U.S.C. 1531 *et seq.*). To make this determination, we first consider whether a group of organisms constitutes a ''species'' under the ESA, then whether the status of the species qualifies it for listing as either threatened or endangered. Section 3 of the ESA defines a ''species'' as ''any subspecies of fish or wildlife or plants, and any distinct population segment of any species of vertebrate fish or wildlife which interbreeds when mature.'' Section 3 of the ESA further defines an endangered species as ''any species which is in danger of extinction throughout all or a significant portion of its range'' and a threatened species as one ''which is likely to become an endangered species within the foreseeable future throughout all or a significant portion of its range.'' We interpret an ''endangered species'' to be one that is presently in danger of extinction. A ''threatened species,'' on the other hand, is not presently in danger of extinction, but is likely to become so in the foreseeable future (that is, at a later time). In other words, the primary statutory difference between a threatened and endangered species is the timing of when a species may be in danger of extinction, either presently (endangered) or in the foreseeable future (threatened). Section 4(a)(1) of the ESA requires us to determine whether any species is endangered or threatened due to any one or a combination of the following five threat factors: (1) The present or threatened destruction, modification, or curtailment of its habitat or range; (2) overutilization for commercial, recreational, scientific, or educational purposes; (3) disease or predation; (4) the inadequacy of existing regulatory mechanisms; or (5) other natural or manmade factors affecting its continued existence. We are required to make listing determinations based solely on the best scientific and commercial data available after conducting a review of the species' status and after taking into account efforts being made by any state or foreign nation to protect the species.

In making listing determinations for these five species, we first determine whether each petitioned species meets the ESA definition of a ''species.'' Next, using the best available information gathered during the status reviews, we complete an extinction risk assessment. We then assess the threats affecting the status of each species using the five listing factors identified in section 4(a)(1) of the ESA.

Once we have determined the threats, we assess efforts being made to protect the species to determine if these conservation efforts are adequate to mitigate the existing threats. We evaluate conservation efforts using the criteria outlined in the joint NMFS/FWS Policy for Evaluating Conservation Efforts (PECE; 68 FR 15100; March 28, 2003) to determine their certainty of implementation and effectiveness for future or not yet fully implemented conservation efforts. Finally, we re-assess the extinction risk of each species in light of the existing conservation efforts.

Status Reviews

In order to complete the status reviews, we compiled information on the species biology, ecology, life history, threats, and conservation status from information contained in the petition, our files, a comprehensive literature search, and consultation with known experts. This information is available in a status review report available on our Web site (see **ADDRESSES** section). In the rest of this section we summarize information from that report.

Sturgeon General Species Description

Sturgeons are bony fishes most closely related to paddlefishes and bichirs. They all have cartilaginous skeletons, heterocercal caudal fins (upper lobe is larger than the lower lobe), one spiracle respiratory opening (like sharks), and unique ganoid scales. In sturgeons, these ganoid scales remain only as the five rows of bony ''scutes'' on the sides of the body. They all have a bottom-oriented mouth with four barbels (sensory ''whiskers''), a flat snout and strong rounded body. Sturgeons have an electrosensory system similar to that in sharks, which they use for feeding. All of these species seasonally migrate into rivers to spawn. They are mostly bottom-oriented feeders that are normally generalist predators on benthic prey, including various invertebrates and fishes, except *H. dauricus,* which is more piscivorous. The following section describes specific aspects of the biology and ecology of the five petitioned species. Information on many of the species is quite sparse so we cannot provide complete descriptions of the species' natural history. More details can be found in Meadows and Coll (2013).

Natural History of the Adriatic Sturgeon (*Acipenser naccarii*)

Taxonomy and Distinctive Characteristics

Acipenser naccarii has a moderate-length snout that is very broad and rounded at the tip. It has an interrupted lower lip at the center of the mouth and its barbels are short. The species has an olivaceous brown back with lighter flanks and a white belly. Morphological differences in scutes and the skull bones help distinguish *A. naccarii* from the similar *A. sturio* and Atlantic sturgeon, *A. oxyrinchus,* which can overlap in parts of their range.

Range and Habitat Use

Historically, *A. naccarii* was known to occur in the Adriatic Sea ranging from lagoons in Venice, Italy, to the coastlines and rivers of Greece (Arlati *et al.,* 2011). It occurred in large rivers over muddy or sandy bottoms (Arlati *et al.,* 2011). Historical records of the species exist in the rivers Adige, Brenta, Bacchiglione, Livenza, Piave, Tagliamento, and Po (including the Po delta); north to Turin; at Carignano and Carmagnola; in the Ticino and Adda rivers; along the Albanian coasts; and in Croatia, Bosnia-Herzegovina, and Montenegro. The species was last recorded from Albania in 1997 in the Buna River (Arlati *et al.,* 2011). It was reintroduced to Greece on one occasion (Paschos *et al.,* 2003), but there is no evidence that it has established a viable population (Paschos *et al.,* 2008). Recent research on ancient specimens suggests the species may have existed in the past and up to the 1980s in the Iberian Peninsula, though this hypothesis has been contested (Meadows and Coll, 2013). There is a landlocked population in the Ticino River above the Isola Serafini dam at the confluence of the Po and Adda rivers. Adaptation of young-of-the-year to brackish and marine waters is poor (McKenzie *et al.,* 2001). The only remaining spawning sites recently in use are at the confluences of the Po River and its tributaries (Adda, Ticino, etc.), and these sites have dwindled to an area of occupancy of less than 10 km^2 (Arlati *et al.,* 2011).

Reproduction, Feeding, and Growth

Acipenser naccarii spawns in freshwater after a marine period of growth during which it remains near the shore (at the mouths of the rivers) at depths of 10 to 40 meters (Arlati *et al.,* 2011). It does not enter pure marine waters. Between February and May, *A. naccarii* ascends rivers to spawn and reproduction occurs between February and July in low current along the river bank. Their lifespan is about 50 years. Adults usually grow to 150 centimeters with a maximum length of 200 centimeters and weigh between 20 and 25 kilograms. Feeding preference is for worms. Little else is known about their life history or life cycle.

Distribution and Abundance

Acipenser naccarii is thought to have declined by at least 80 percent over the past 3 generations (Arlati *et al.,* 2011). During the last few decades, the abundance of *A. naccarii* has dramatically decreased as reflected by the annual catches of 2–3 metric tons per year in the beginning of the 1970s with only 200 kg per year of catches from 1990–1992, with no decrease in demand. In 1993, only 19 specimens were caught (Bronzi *et al.,* 1994). There is no longer any legal commercial fishery. The last known natural wild spawning in Italy occurred in the early 1980s (Arlati *et al.,* 2011). Only a few fish have been caught recently, and they probably originated from stocked population releases (Arlati *et al.,* 2011).

The species has been reintroduced in Italy through a stocking program in rivers in the north central Lombardy region since 1991, and in the rivers of the northeast Veneto region since 1999 (Arlati and Poliakova, 2009). From June 1988 through April 2007, 438,633 fish were restocked. At present, the remaining captive parents from the wild stock constitute the only living Adriatic sturgeons of unequivocal wild origin left (Congiu *et al.,* 2011). Evidence to confirm reproduction in the wild of these stocked fish remains lacking (Arlati *et al.,* 2011).

Population Structure

A genetic comparison between Italian and Albanian samples collected in the mid-20th century showed a high level of diversification and suggested that different populations should be considered as distinct conservation units (Ludwig *et al.,* 2003). There is no other information on population biology or geographical patterns in morphology, ecology, or biology with which to draw conclusions or make inferences about population or DPS structure.

Natural History of the European Sturgeon (*Acipenser sturio*)

Taxonomy and Distinctive Characteristics

Acipenser sturio is a large species that can reach 5 to 6 meters (~16.5 to 20 feet) in length and weigh up to 1000 kilograms (2,200 pounds). The species has an elongated body with a narrow-tipped snout and a mouth that is

interrupted at the center of the lower lip. It has an olive-black upper body and a white belly. Recent mitochondrial DNA (mtDNA) evidence suggests *A. sturio* and *A. oxyrinchus* occurred in sympatry in the Baltic Sea and that *A. oxyrinchus* dominated *A. sturio* and replaced it about 800–1,200 years ago (Ludwig *et al.,* 2002). Stankovic (2011) extended this work to show that the dominant species in the area of the Oder and Vistula River systems has been *A. oxyrinchus* since at least the third century B.C. Both *A. sturio* and *A. oxyrinchus* were present in France from 3000 years B.C. (Desse-Berset, 2009; Desse-Berset and Williot, 2011; Desse-Berset, 2011). *Acipenser oxyrinchus* was present in several archaeological sites on the French Atlantic coast until the second century A.D., in the Loire River in the 11th century A.D., in the Seine River drainage between the 2nd century B.C. and first half of the 17th century A.D., as well as in the Scarpe River flowing into the Scheldt River (France, Belgium and the Netherlands) between the 10th and 11th century A.D (Desse-Berset and Williot, 2011). Tiedemann *et al.* (2007) however provide evidence of genetic introgression of *A. oxyrinchus* females and *A. sturio* males (which Gessner (personal communication) claims to be outdated and erroneous due to methodology). Thus the historical presence of these species in this region is complex and some old records and studies may have misidentified species. Analyses of the genetics of historical museum specimens provide evidence of a decline in genetic diversity in *A. sturio* since 1823 (Ludwig *et al.,* 2000).

Range and Habitat Use

Acipenser sturio was historically abundant in the North Sea, the English Channel, and most European coasts of the Atlantic Ocean, the Mediterranean Sea and the Black Sea (Freyhoff *et al.,* 2010) with an almost pan-European distribution across river systems. It is the only verified native sturgeon on the Iberian Peninsula (Almaca and Elvira, 2000; Ludwig *et al.,* 2009). Currently, it is restricted to a small population that breeds in the Gironde system (consisting of the Gironde estuary, and the Dordogne and Garonne rivers) in southwestern France and the remnants of a population that last reproduced in the Rioni basin in Georgia in 1991 (Meadows and Coll, 2013).

Juvenile *A. sturio* in the Gironde estuary prefer habitat where important prey items such as tube-dwelling polychaetes exist in large numbers. Juveniles exhibit movements mainly oriented to follow the direction of the tidal current and never use intertidal areas. Information on adult habitat preferences in lower estuaries and the ocean is sparse and qualitative. It appears the species is found close to shore in the sea and is never found in waters deeper than 100–200 meters (Meadows and Coll, 2013).

Reproduction, Feeding and Growth

Acipenser sturio has probably the most detailed information on reproductive biology of the five petitioned species under NMFS' jurisdiction. They can tolerate a wide range of salinities and spend most of their life in salt water (close to the coast), but migrate to spawn in fresh waters. Juveniles can be found both in estuaries and in the sea. The reproductive phase begins later than in many other sturgeons, with males reproducing for the first time at 10 to 12 years and females at 14 to 18 years (Freyhoff *et al.,* 2010), with ranges in the literature of 7 to 15 for males and 8 to 22 for females (Williot *et al.,* 2011b). Maturity is reached at an earlier age in southern parts of the species' range (Williot *et al.,* 2011b). They reach sexual maturity between 10 and 12 years in males and between 13 and 16 years in females in the Gironde system (Williot *et al.,* 1997). Size at maturity varies from 90–130 cm total length (TL) in males and 95–185 cm TL in females (Williot *et al.,* 2011b). Reproduction likely occurs between March and July (depending on location) at 2-year intervals for males and 3 to 4 year intervals for females (Meadows and Coll, 2013). Spawning migration of 1000 kilometers (620 miles) or more are reached during high-water years. Females produce 800,000 to 2,400,000 sticky, dark eggs during a spawning period, with egg-laying usually done at a depth of 2 to 10 meters in large rivers or estuaries that have gravel bottoms, to which the eggs adhere. Eggs hatch in 3–14 days at temperatures of 7.7 to 20°C (Rosenthal *et al.,* 2007). Fish make the transition to the juvenile stage after about 1 month (Acolas *et al.,* 2011b). Juveniles make a slow descent downstream to the estuary and are present in the upper estuary of their birth rivers at 1 year of age, where they appear to congregate in areas of high food density. They feed on crustaceans, mollusks, and especially worms; juveniles also feed on small fish (Brosse *et al.,* 2000; Brosse *et al.,* 2011). Juveniles enter the sea after a 2- to 6-year period during which they alternate movement between the sea and spending the winter in the estuary. For the next 4 to 6 years, they leave the sea to enter the lower estuary at summer time, and return to the sea in the fall.

Distribution and Abundance

Acipenser sturio is thought to have declined by at least 90 percent over the past 75 years (Freyhoff *et al.,* 2010). It was an important commercial species until the early 20th century, but no natural reproduction has been documented in the wild since 1994 (in southwest France, Freyhoff *et al.,* 2010). For the Weichsel or Vistula River in Germany, archaeological remains from the first millennium indicate that up to 70 percent of the protein consumed by humans derived from sturgeon (Kirschbaum and Gessner, 2000). The last specimen from German waters was caught in 1992 (Gessner *et al.,* 2011). Quantitative data document the decline in catch in the lower Elbe and Rhine rivers in Germany from the late 1800s to 1918, when the species was commercially extirpated (Meadows and Coll, 2013). The species was extirpated in Belgium by 1840 (Rosenthal *et al.,* 2007). It was likely extirpated in the Tagus River in Spain by the Middle Ages (Ludwig *et al.,* 2011). In Italy, it was historically the most common sturgeon in the Po River, until declining from the late 1800s to the 1950s after dam construction and other threats increased, with complete extirpation by 1987 (Bronzi *et al.,* 2011b). A decline in the Tiber River in Italy led to extirpation by the 1920s (Bronzi *et al.,* 2011b)

The only known potential spawning population remaining is in the Gironde system of southwestern France, but the last wild reproduction events occurred there in 1988 and 1994 (Williot *et al.,* 1997). Genetic data strongly suggest that the cohort of 1994 derives from only one mating pair (Ludwig *et al.,* 2004). Between 1951 and 1980, catches of sturgeon in the Gironde system dropped by 94 percent, from 2,500 fish per decade to only 150 (Rosenthal *et al.,* 2007; Castelnaud, 2011). The current population size is roughly estimated at approximately 20 to 750 adults (Rosenthal et al. 2007, Freyhoff *et al.,* 2010) or 500 to 1,500 individuals (Kirschbaum *et al.,* 2009). Age structure of the population in the Gironde shifted significantly to smaller, younger individuals between 1985 and 1992 (Meadows and Coll, 2013). Large numbers have been stocked from hatchery programs in the past few years (7,000 in 2007, 80,000 in 2008, and 46,000 in 2009) (Freyhoff *et al.,* 2010). The first-generation of stocked fish (the 2007 population) is expected to start reproducing in 2014 (Freyhoff *et al.,* 2010). The survival rate of these recent releases is currently unknown; however, the survival rate for a previous restocking effort in 1995 was 3 to 5

percent (Rochard *et al.,* 1997). A population viability analysis (PVA) model was recently completed for the Gironde system population. The most influential parameters affecting the model output were the mean number of offspring, egg-to-age-1 natural mortality, sex ratio, and the age at which females reach maturity (Jarić *et al.,* 2011). The PVA did not estimate extinction risk. The model did confirm the population has a high susceptibility to unsustainable fishing, and a slow recovery potential, with recovery potentially spanning a number of decades (Jarić *et al.,* 2011).

The only other place where adult sturgeon may occur is in the Rioni River system in Georgia (Kolman, 2011). This system has never had a population size estimate survey conducted (Kolman, 2011). Overfishing, pollution, and habitat destruction (dam construction on the spawning site) are all cited as causes of their decline in the system (Kolman, 2011). The last documented reproduction there was in 1991 (Rosenthal *et al.,* 2007), though a few individual fish of 1.2 to 1.75 m length were occasionally caught between 2002 and 2008 (Kolman, 2011). It was listed as endangered in the Georgian Red Book of Endangered Species in 1967 (Kolman, 2011).

Population Structure

Debus (1999) found some differences in the bony plates of *A. sturio* from the Gironde system and the Rioni River, but concluded that only one species is present in European waters. Other studies considered evidence of intra- and interspecific genetic variation, and some have suggested subspecies exist, but the current consensus is that there is not enough evidence to support distinct subspecies of *A. sturio* (Holcik *et al.,* 1989; Ludwig *et al.,* 2000). Similarly, there is morphological variability that has led some to suggest a Baltic subspecies (Artyukhin and Vecsei, 1999), but these suggestions have also not been widely accepted by the scientific community. Holcik (2000) discusses the possible occurrence of 9 to 12 historical populations, and Elivra and Almodovar (2000) studied morphometric and meristic variation and found some evidence of four populations. There is no other information on population biology or geographical patterns in morphology, ecology, or biology with which to draw conclusions or make inferences about population or DPS structure in this species. Based on the above, and the limited current distribution of the species, we conclude that no subspecies or DPS designations are warranted.

Natural History of the Chinese Sturgeon (*Acipenser sinensis*)

Taxonomy and Distinctive Characteristics

Acipenser sinensis is a large species reaching up to 5 meters (16.4 feet) in length and weighing up to 450 kilograms (~992 pounds). The species has gray-black coloring on its back, red-brown or gray coloring on its sides, and a white belly.

Range and Habitat Use

Historically, *A. sinensis* is native to the northwest Pacific Ocean in China, Japan, North Korea, and South Korea (Wei, 2010a). In China, the species historically occurred in the Yellow, Yangtze, Pearl, Mingjiang and Qingtang rivers, but it is now extirpated from all of these rivers except for the middle and lower reaches of the Yangtze (Wei, 2010a). At sea, *A. sinensis* occurs close to the shores of the Yellow and East China seas. Wang *et al.* (2012) report on acoustic tagging that showed spawning migrations of Chinese sturgeon occurred between June and October in the remaining accessible parts of the Yangtze River. They showed that females left the spawning ground within hours, but males remained for anywhere from 2.5 to 148 days.

Reproduction, Feeding and Growth

Acipenser sinensis juveniles live in estuaries and near coastlines and migrate upriver when they become sexually mature (Wei, 2010a). Males reach sexual maturity at 8 to 18 years of age and females at 13 to 28 years of age (Wei *et al.,* 1997). Maximum age of reproduction is 35. Adults reach the mouth of the Yangtze River between June and July and reach the middle of the river in September or October, where they then spawn and overwinter (Wei *et al.,* 1997; Wei, 2010a). Spawning usually occurs at night in October or November at water temperatures of 15 to 20 °C in substrates the size of coarse gravel to 20–50 cm boulders at depths of 8 to 26m in current velocities near 1m/s (Meadows and Coll, 2013). The larvae hatch after 4 to 6 days at 16.5 to 18 °C and juveniles remain in the river for a year before migrating to the sea. Before the Gezhouba Dam was constructed on the Yangtze River in 1981, the migration distance for *A. sinensis* was as long as 2,500 to 3,300 kilometers (Wei *et al.,* 1997, Wei, 2010a). The Three Gorges Dam was completed in 2003 upstream of the Gezhouba dam, but affects the downstream water conditions and hydrograph. Considerable hydrodynamic modeling and testing has been done to determine the effects of altered flows due to the dams on the species' biology (reviewed in Wang *et al.,* 2012). Now there is just one remaining spawning ground, which is situated just below the Gezhouba Dam. Juveniles 7 to 38 cm TL occur in the Yangtze River estuary from the middle of April through early October (Wei *et al.,* 1997). *Acipenser sinensis* feed on aquatic insect larvae, shrimps, crustaceans, and fishes. The female/male sex ratio has changed from 0.79 in 1981–1993 to 5.9 in 2003–2004, the motility of sperm has decreased, and intersex individuals have been observed (Meadows and Coll, 2013).

Distribution and Abundance

The population size of *A. sinensis* is decreasing with an estimated 97.5 percent decline in the spawning population over a 37-year period, from ~100,000 in the 1970s to ~2,200 individuals (95 percent confidence interval of 946 to 4,169) in the early 1980s (Wei, 2010a). The species was a major commercial fishery resource in the 1960s, but by the end of the 1970s yearly catch had declined to 500 fish (Wei, 2010a). Recent surveys between 2005 and 2007 show the total spawning population to be 203–257 individuals (Wei, 2010a; Xiao and Duan, 2011). The estimated numbers of eggs spawned annually sharply declined between 1997 and 2003; the estimates were 35.5 million in 1997, 2.2 million in 2003, and about 2 million per year between 2006 and 2008 (Xiao and Duan, 2011). Between 1983 and 2007, more than 9 million hatchery raised juveniles (including larvae) were released into the Yangtze River to increase population numbers, but the contribution of these releases to wild stocks is considered to be less than 10 percent (Yang *et al.,* 2005; Wei, 2010a).

In the Pearl River, the two spawning areas stopped being used in the late 1970s as a result of the stock decline (Zhang, 1987). A study sampling fish larvae from 2006 through 2008 failed to collect any Chinese sturgeon larvae among the 614,000 fish larvae collected (Tan *et al.,* 2010). Liao *et al.* (1989) also document the lack of the species in the Pearl River.

Gao *et al.* (2009) conducted a VORTEX PVA model to estimate the sustainability of the population and to quantify the efficiency of current and proposed conservation procedures. The most likely models predicted the observed decline of Chinese sturgeon resulting from the effect of the Gezhouba Dam and also predicted future declines for the species. The model simulations also demonstrated

that the current restocking program is not sufficient to sustain or improve the status of this species, as the capture and handling mortality of the artificial reproduction program induces the loss of more wild mature adults than the recruitment expected by the artificial reproduction. Thus stocking programs intended to help the species can have a net negative effect.

Population Structure

Besides uncertainty about the taxonomic status of the Pearl and Chinese River populations (Billard and Lecointre, 2001), there is no information on population biology or geographical patterns in morphology, ecology, or biology with which to draw conclusions or make inferences about DPS structure in this species.

Natural History of the Sakhalin Sturgeon (*Acipenser mikadoi*)

Taxonomy and Distinctive Characteristics

Acipenser mikadoi, like *A. naccarii* has a lower lip that is split down the middle and four barbels that are nearer to the mouth than the tip of its snout. They can grow up to 2.5 meters (8.2 feet) in length and weigh up to 150 kilograms (~330 pounds). It has olive to dark green coloring on its back and a yellowish green-white belly, with an olive-green stripe on its side between the lateral and ventral scutes. Its separation from North American green sturgeon, *A. medirostris,* was recently reaffirmed by Vasil'eva *et al.* (2009).

Range and Habitat Use

Historically, *A. mikadoi* is native to the northwest Pacific Ocean in Japan and Russia, with an uncertain presence in China, South Korea, and North Korea (Meadows and Coll, 2013). During spawning migration, the species historically ascended Russian coastal rivers (the Suchan, Adzemi, Koppi, Tumnin, Viakhtu, and Tym Rivers) and the Ishikari and Teshio Rivers of Japan (Shmigirlov *et al.,* 2007; Mugue, 2010). It was also known from the mouths of small rivers of the Asian Far East and Korean Peninsula, as well as the Amur River, and rivers of the Sakhalin Island (Meadows and Coll, 2013). Currently, it is found throughout the Sea of Okhotsk, in the Sea of Japan as far east as the eastern shore of Hokkaido (Japan), along the Asian coast as far south as Wonsan (North Korea), and to the Bering Strait on the coast of the Kamchatka Peninsula (Shmigirlov *et al.,* 2007; Mugue, 2010). It spawns persistently only in the Tumnin River in the Khabarovsk Region in Russia (Shmigirlov *et al.,* 2007), though at least one mature female was caught in Bay Viyakhtu near the settlement of Trambus in the summer of 2010, and a mature male was caught in the Viyakhtu River in 2011 (Koshelev *et al.,* 2012).

Reproduction, Feeding and Growth

Acipenser mikadoi lives in higher salinity waters than other sturgeon within its range. It has an estimated generation length of 15 years and reaches maturity between 8 to 10 years of age. They spawn in June through July in the Tumnin River, and in April and May in the rivers of Hokkaido, Japan (Mugue, 2010), with migration occurring once individuals reach 135cm total length (Koshelev *et al.,* 2012). Spawning occurs at water temperatures of 7.2 to 11.5 °C, and juveniles migrate to the sea in the fall of the same year they hatched (Birstein, 1993). Estuaries are thought to be the nursery grounds for the species (Paul, 2007a). The species feeds mainly on shrimp, crabs, worms, amphipods, isopods, sand lances, and other fishes.

Distribution and Abundance

The population size of *A. mikadoi* is decreasing and has been declining over the past century (Mugue, 2010). Anecdotal reports note that the species ''was common in the fish markets of Japan in the 1950s and now only a few specimens are found per year'' (Mugue, 2010). Erickson (2005) summarizes status information on the species in the Tumnin River until 2003. The most recent population estimates range from 10 to 30 adults entering the Tumnin River to spawn annually, with only three specimens caught in 2005, and two in 2008. These few specimens were used to establish aquaculture stocks (Mugue, 2010). Koshelev *et al.* (2012) report catches of 17 individuals in the Tumnin River and Datta Bay from 2006–2008. Recent seine fish surveys in the Tumnin River during the past 2 years have not caught this species (Zolotukhin, 2012). Five to 10 Sakhalin sturgeon are caught annually in the Amur River estuary where they were introduced (Krythkin and Svirskii, 1997c). The species is now listed as extinct in the Hokkaido Red Data Book in Japan (Omoto *et al.,* 2004).

Population Structure

Spawning is earlier in the rivers of Hokkaido than the Tumnin River, but it is unknown if this is simply an effect of environmental conditions or reflects underlying population structure. There is no other information on population biology or geographical patterns in morphology, ecology, or biology with which to draw conclusions or make inferences about population or DPS structure in this species.

Natural History of the Kaluga Sturgeon (*Huso dauricus*)

Taxonomy and Distinctive Characteristics

Huso dauricus is one of the world's largest freshwater fishes, with mature individuals exceeding 5.6 meters in length (~18.4 feet) and 1 ton in weight. It has a crescent-shaped mouth with flat barbels. The species has gray-green to black coloring on its back and a yellowish green-white belly. This species is more piscivorous than the other sturgeons considered herein, and as a result, it has the ability to project its jaws further in front of its mouth to help catch prey.

Range and Habitat Use

Huso dauricus historically inhabited the lower two-thirds of the Amur River of Russia and China from its estuary to its uppermost sections and tributaries, including the Shilka, Onon, Argun, Nerch, Sungari, Nonni, Ussuri, and Neijian rivers (Ruban and Wei, 2010). It inhabited all types of benthic habitats in the large river and lakes of the Amur River basin (Ruban and Wei, 2010). All we know of current marine range is that young individuals appear in the Sea of Okhotsk and the Sea of Japan.

Reproduction, Feeding and Growth

Huso dauricus is a semi-anadromous species, spending some of its life in salt water but most of its life in freshwater (Ruban and Wei, 2010). Young enter the Sea of Okhotsk during the summer. The species has a generation length of 20 or more years and a spawning interval of 4 to 5 years for females and 3 to 4 years for males (Ruban and Wei, 2010). Females mature at 14 to 23 years of age and males mature at 14 to 21 years of age (Meadows and Coll, 2013). Spawning occurs from May through July at water temperatures of 12–20 °C, over pebble deposits in calm waters of the main riverbed in depths of 2–3m (Wei *et al.,* 1997, Billard and Lecointre, 2001). Spawning is documented from many sites, but not the Songhuajiang and Wusulijiang rivers (Wei *et al.,* 1997). Fecundity is from 3,200 to 15,000 eggs/kg body weight and has declined over time (Meadows and Coll, 2013). Downstream migration begins almost immediately after hatching. Kaluga consume mostly invertebrates in the first year of life, later becoming more predatory and less bottom oriented than most other sturgeon, switching to juveniles of pelagic fishes such as chum salmon, *Oncorhynchus keta* (Krykhtin

and Svirskii, 1997c). At the age of 3 to 4 years, Kaluga start to feed on adult fishes. Cannibalism is common. Kaluga do not feed during winter.

Distribution and Abundance

Huso dauricus has declined sharply in both stock size and recruitment since the 19th century, with an 80 percent decline in population from the late 1800s to 1992 (Ruban and Wei, 2010). Official catch records in the Russian Federation and the former USSR dropped from 595 tons in 1881 to 61 tons in 1948, and were 89 tons in 1996 (CITES, 2000). Between 1993 and 1997, meat of *H. dauricus* was still observed for sale in many parts of Russia (CITES, 2000). Official records in China indicate that the combined annual catches of *A. schrenckii* and *H. dauricus* have fluctuated inconsistently since the 1950s (CITES, 2000). In the last 15 years the species has continued to decline and the average age is decreasing as well (Ruban and Wei, 2010).

Population Structure

There are four recognized populations of *H. dauricus:* one in the estuary and coastal brackish waters of the Sea of Okhotsk and Sea of Japan, the second in the lower Amur, the third in the middle Amur, and the fourth in the lower reaches of the Zeya and Bureya rivers (Krykhtin and Svirskii, 1997a; 1997b; 1997c). At the end of the 19th century, when the highest catches were recorded (more than 595 metric tons per annum), the largest population was that of the middle Amur, which constituted 87 percent of the total annual Kaluga catch on the Russian side, while the estuary and lower Amur populations accounted for no more than 2 percent each, and the Zeya-Bureya population constituted around 11 percent of the species' catch (Krykhtin and Svirskii, 1997b).

The estuary population is divided into freshwater and saltwater morphs; 75–80 percent are the freshwater morph and the remainder are the saltwater morph (Krykhtin and Svirskii, 1997c). The latter winters in the freshwater zone, and migrates to the brackish water of the delta in the northern part of the Tatar Strait and the south-western part of the Sakhalin Gulf for feeding in June and July. They return to the freshwater zone in autumn when the salinity increases. For spawning, most of the saltwater morph migrates in winter to grounds up to 500 km from the river mouth, while other morphs enter the mid-Amur River. However, the freshwater non-migratory stock has not been assigned a separate population status as both stocks spawn on the same spawning grounds in the lower Amur River (Schmigirlov *et al.,* 2007).

Current populations consist predominantly of young fish, with mature fish accounting for only 2–3 percent of the population (Krykhtin and Svirskii, 1997b). As a result of the species' late maturation and generally low reproductive rate, the population decline is expected to continue, especially in the middle Amur. Since 2000, Kaluga older than 10 years have not been observed in the Amur River channel during nonspawning periods, suggesting that adults from the resident stocks in the Amur River are absent (Schmigirlov *et al.,* 2007). In 2007, China received approval for caviar export quotas of 1,595 kg for wild-caught *H. dauricus* from the Amur River. However, this quota could not be filled because the sturgeon population in the Amur River declined drastically, and the resource is considered to be exhausted (Li *et al.,* 2009). No more recent population assessment data are available.

Species Determinations

Based on the best available scientific and commercial information described above, we have determined that *Acipenser naccarii, A. sturio, A. sinensis, A. mikadoi* and *Huso dauricus* are taxonomically-distinct species and therefore meet the definition of ''species'' pursuant to section 3 of the ESA and are eligible for listing under the ESA. Based on the information discussed above in the ''Population Structure'' section we determine there is insufficient information to identify DPSs of *A. naccarii, A. sinensis* and *A. mikadoi.* Based on the extinction risk status determined for *A. sturio* and *H. dauricus* discussed below, we determine that designating DPSs for these species is not warranted.

Extinction Risk

We next consider the risk of extinction for *Acipenser naccarii, A. sturio, A. sinensis, A. mikadoi* and *Huso dauricus* to determine whether the species are threatened or endangered per the ESA definition discussed above. As part of the status review, a three-person team of biologists evaluated the extinction risk of each species. They used a modification of the methods developed by Wainwright and Kope (1999) and McElhany *et al.* (2000) to organize and summarize their findings. This approach has been used in the ESA review of many other species (Pacific salmonid, Pacific hake, walleye pollock, Pacific cod, Puget Sound rockfishes, Pacific herring, and black abalone) to summarize the status of the species according to demographic risk criteria. Using these concepts, the team members individually estimated the extinction risk for each of the five species at both the current time and anticipated extinction risk expected in the foreseeable future based on the information in the report. They voted on the likelihood of extinction in 10 percent probability increments, with each member allocating 10 votes among the possible risk categories. They also performed a threats assessment by identifying the severity of threats that exist now and in the foreseeable future, organized around the five Section 4(a)(1) threat factors and their interaction as described in our regulations at 50 CFR 424.11(c). They defined the ''foreseeable future'' as the timeframe over which threats, or the species' response to those threats, can be reliably predicted to impact the biological status of the species.

The extinction risk analysis team found all five species to be at high risk of extinction in the present, with median votes for each team member at or above 80 percent probability of being currently in danger of extinction for each species. After reviewing the best available scientific data and the extinction risk evaluation on the five species of sturgeon, we concur with the findings of the extinction risk analysis team and conclude that the risk of extinction for all five species of sturgeon is currently high.

Summary of Factors Affecting the Five Species of Sturgeon

Next we consider whether any one or a combination of the five threat factors specified in section 4(a)(1) of the ESA are contributing to the extinction risk of these five sturgeons. The extinction risk analysis team voted in a similar fashion for each of the five threat factors and their interaction as they did for overall extinction risk discussed above. We concur with their assessment. We discuss each of the five factors and their interaction in turn below, with species-specific information following a general discussion. More species-specific details are available in Meadows and Coll (2013).

The Present or Threatened Destruction, Modification, or Curtailment of Its Habitat or Range

We identified habitat destruction, modification, or curtailment of habitat or range as a potential threat to all five species of sturgeons and determine that this factor is currently contributing significantly to the risk of extinction most significantly for *A. naccarii, A. sturio,* and *A. sinensis* (Meadows and

Coll, 2013). Dams, dikes and channels, pollution and poor water quality, and range loss are threats to all of the petitioned species to varying degrees.

The hydropower dam built in the 1950s on the Po River, Italy (Isola Serafini's Dam), and water pollution particularly affect the last stronghold of *A. naccarii* (Bronzi *et al.,* 1994, Arlati *et al.,* 2011). The Isola Serafini dam is at the mid-point of the Po River and has fragmented the population and blocked migration to some spawning grounds (Bronzi *et al.,* 2006).

Dams are a particularly significant factor in the decline and range contraction of *A. sturio* (Meadows and Coll, 2013). Water pumping and dredging have also been identified as habitat threats (Williot *et al.,* 2002a). Gessner (2000) provides a graphical representation of the timeline and relative intensity of river habitat alterations for the past 1,000 years. Untreated sewage is an additional cause of the decline in the Elbe River in Germany and throughout Europe since the onset of industrial development (Gessner, 2000; Gessner *et al.,* 2011). Williot and Castelnaud (2011) summarize the history of habitat-altering dams and mines in France. Extraction of gravel in the Garonne River was a threat to the species (most has now stopped but the damage remains) as is water pollution and dams (Williot *et al.,* 1997, Lepage *et al.,* 2000, Rosenthal *et al.,* 2007, Freyhoff *et al.,* 2010). A dam, water pollution and gravel extraction are all implicated in the extirpation in the Guadalquivir River in Spain (Elvira *et al.,* 1991; Fernandez-Pasquier, 1999; Ludwig *et al.,* 2011).

The construction of the Gezhouba Dam limits the distribution of *A. sinensis* in the Yangtze River (Zenglong, 1998; Wei, 2010a) and affects recruitment and reproductive development (Wei *et al.,* 1997). Historically, the spawning habitats of Chinese sturgeon were located in the main stream of the upper Yangtze and the lower Jinsha rivers, covering a stretch of about 800 km of river length. However, after the damming their spawning areas were limited to a 30 km reach below the Gezhouba Dam (Wei *et al.,* 1997), with only two favorable sites being established below the dam (Ban *et al.,* 2011). The completion of the Three Gorges Dam upstream of the Gezhouba dam in 2003 has further impacted the species by lowering the water level of the Yangtze River in fall and winter and affecting the water temperature and other stream characteristics (Wei, 2010a; Xiao and Duan, 2011). Three Gorges Dam, the world's largest, and only fully operational in 2010, also reduces the average discharge of the Yangtze by 40 percent, and this is expected to seriously affect the remaining spawning habitat into the future. The dams have a serious effect on spawning (Meadows and Coll, 2013). A proposed hydroelectric project on the Pearl River, the Changzhou Dam, will block spawning migrations in that system (Wei et al. 1997). Water pollution is also a problem for the species, especially in the Yangtze River, as much untreated wastewater discharges into the river each year (Xue *et al.,* 2008). Water quality is also affected by runoff caused by deforestation of the upper Yangtze Valley (Wei, 2010b). Serious morphological malformation and impairment of reproduction from poor water quality has been documented in the system and is likely due to the chemical triphenyltin (TPT) which, along with its chemical precursors, is used as a pesticide and antifouling paint ingredient (Hu *et al.,* 2009). Perfluorinated compounds are also at a level that may impact reproduction (Peng *et al.,* 2010). Research by Zhang *et al.* (2011) found that all five species of Chinese sturgeon prey examined in their study were contaminated by heavy metals.

Pollution from agriculture, oil production, and mining is degrading habitat quality for *A. mikadoi* (Shilin, 1995; Mugue, 2010). Logging also occurs along the Tumnin River (Erickson, 2005). Damming of the Tumnin River is under discussion; this would massively affect the reproduction of this species (Gessner, personal communication).

In contrast to most large rivers, the Amur River, the core of the range of *H. dauricus,* has not been dammed; however, dams are being planned in the main tributaries and in the middle reaches (Gessner, personal communication). Water pollution (including heavy metals, oil products, phenol, mineral fertilizers and gold mining byproducts) in the Amur River system has increased in recent years from both the Russian and Chinese sides (Matthieson, 1993; Krykhtin and Svirskii, 1997b). Studies of the effects of pollution on this species have apparently not been undertaken, so it is unclear the extent to which this increased pollution could limit recovery of the species.

Overutilization for Commercial, Recreational, Scientific, or Educational Purposes

We identified overutilization for commercial, recreational, scientific, or educational purposes as a potential threat to all five species of sturgeons and determine that this factor is currently contributing significantly to the risk of extinction for *A. naccarii,* A. *sturio, A. mikadoi* and *H. dauricus,* and moderately to significantly so for *A. sinensis* (Meadows and Coll, 2013). The main role of this threat was with historical fisheries causing large declines in these species. Commercial and recreational sturgeon fisheries have existed since at least the 5th century BC and are noted in ancient Greek, Roman, and Chinese literature (Pikitch *et al.,* 2005). All major sturgeon fisheries surpassed peak productivity levels by the mid-20th century, with 70 percent of major fisheries posting recent harvests less than 15 percent of historical peak catches and 35 percent of the fisheries examined crashing within 7 to 20 years of inception (Pikitch *et al.,* 2005; Bronzi *et al.,* 2011a). The commercial caviar trade centers have shifted geographically through time. In the archeological sites of Ralswiek in Germany (8th through 12th century) and of Gdansk in Poland (10th through 13th century) the proportion of sturgeons in the excavations fell from 70 percent at the start to 12–13 percent at the end of the occupation of both sites, suggesting a progressive overexploitation and decline (Debus, 1997). By the 19th century, the United States was the top caviar producer, primarily from *A. oxyrinchus oxyrinchus,* until those stocks declined as well (Birstein, 1997; Secor, 2002). By the end of the 19th century, Russia was a major caviar trading nation and by the early 20th century Russian sturgeon harvests were seven times greater than historical peak U.S. catches (Taylor, 1997; Secor *et al.,* 2000). Next, the Caspian Sea states of Iran, Kazakhstan, and Russia dominated the international trade in capture fisheries products, while the United States, Japan, the European Union and Switzerland were the major importers (De Meulenaer and Raymakers, 1996; Hoover, 1998; Raymakers, 2002). The dissolution of the Soviet Union is considered to be a turning point in sturgeon fisheries management, after which increased illegal harvest and trade ensued, flooding the international market with illegal, low quality, inexpensive caviar (Meadows and Coll, 2013). While historical overfishing has played a significant role in the decline of these species, bycatch is currently the main threat in this category for all species except *A. sinensis* and *H. dauricus,* where we have no information on bycatch.

CITES has regulated international trade in all species of sturgeon since 1998 (CITES 2013). CITES Appendix II

listings allow sustainable commercial trade, while Appendix I listings ban most commercial trade. One of the petitioned species, *Acipenser sturio,* was added to CITES Appendix II in 1975, and transferred to Appendix I in 1983. The remaining petitioned species were added to CITES Appendix II in April 1998. CITES Resolution Conf. 12.7 (Revised at the Convention of the Parties 14 in 2007)(CITES, 2002), requires reporting of annual export and catch quotas to the CITES Secretariat and registration of processing and packaging plants. Since 2008, wild capture export quotas are zero under CITES. Studies of international trade give evidence for a high proportion (7–25 percent) of caviar with the wrong species origin assigned and labeled and sold on the world market (Meadows and Coll, 2013). In 2011, CITES appeared pessimistic about efforts to control illegal trade, stating: ''It is several years since the Secretariat received any information from sturgeon range States about poaching or illegal trade. The Secretariat's enforcement-related staff, who not so long ago devoted very significant amounts of time in assisting the combating of illegal trade in caviar, now spend hardly any time on this matter'' (CITES, 2011). In a review of Chinese sturgeon aquaculture, Wei *et al.* (2011) note new markets and products, including medical and health products, cosmetics, and leather, have appeared in recent years. This could lead to increased demand that may increase pressure for illegal, unreported, and unregulated fishing. They also noted declines in the number of seedlings needed from the wild or imported from other countries, which would tend to decrease pressure on wild stocks.

Bycatch (Gessner, personal communication) and recreational fishing (Williot, personal communication) are the main current problems in this category for *A. naccarii.* This species is fished commercially and recreationally. It is fished for its meat and the roe is not currently consumed as caviar (Kottelat and Freyhoff, 2007).

Acipenser sturio is prized for its flesh and its caviar, and was an important commercial fish for centuries in some locations until early in the 20th century when populations declined below viable levels for a fishery (Williot *et al.,* 2002a). Gessner *et al.* (2011) provide a summary of fishery data and information, largely from German waters, where the use of European sturgeon by humans has been documented in archaeological sites dating back to 100 B.C. Rough estimates of catch are available all the way back to the Middle Ages (Meadows and Coll, 2013). Bycatch in other fisheries is a current threat, with an estimated bycatch of up to 200 fish per year from gillnets and trawling at sea (Rosenthal *et al.,* 2007; Freyhoff *et al.,* 2010). In France, a program was recently carried out to minimize bycatch and those efforts are spreading throughout Europe (Michelet, 2011).

Acipenser sinensis was a major commercial fishery resource in the 1960s, but by the end of the 1970s catch had declined to 500 fish and has not recovered (Wei, 2010a). Drift nets were used to catch it in the river and set nets were used at the river mouth (Wei, 2010a). Commercial fishing has been prohibited since 1983 (Billard and Lecointre, 2001).

Acipenser mikadoi was harvested commercially in the past and illegal poaching continues to be a threat (Shilin, 1995; Mugue, 2010). Bycatch from salmon trawling off the coast is also a threat (Shilin, 1995; Mugue, 2010).

Overutilization is thought to be the main threat that caused the decline of *H. dauricus* (Birstein *et al.,* 1999). The species has been fished commercially since the 1800s in Russia and since at least the 1950s in China (CITES, 2000). Peak catch for the species was in 1891 (585 tons) (Krykhtin and Svirskii, 1997b; Koshelev and Ruban, 2012). In the last century, catch fluctuated between 100 and 400 tons annually on the Chinese side of the Amur River, and since the 1990s has been below 100 tons on the Russian side (Pikitch *et al.,* 2005). On the Chinese side, fishing impacts were low before the 1970s, because few people lived along the Amur River. However, with increasing population and the high profit of sturgeon fishing, catches increased after that time (Wei *et al.,* 1997). Illegal poaching for caviar remains a threat on the Russian side, where fishing is now severely restricted (Ruban and Wei, 2010). International trade in caviar from *H. dauricus* declined from 1999 to 2004. No CITES quota for wild caught fish was made after 2008.

Disease and Predation

We determine disease and predation are potential threats to each of the five species of sturgeon, but the level of threat varies by species. This threat is ranked most highly for *A. sinensis* (moderate to high) and *H. dauricus* (low to moderate) (Meadows and Coll, 2013). Competition for habitat with the Wels catfish, *Silurus glanis,* may have contributed to the decline of *A. naccarii* (Arlati *et al.,* 2011). *Silurus glanis* is also a potential predator of this species (Gessner, personal communication). In December 1999 several thousand juvenile and several hundred gravid female *A. baerii* escaped into the Gironde River (Bordeaux region) in France during two storms. The survival of the escaped fish and their short-term effect on *A. sturio* are documented by Rochard *et al.* (2001), but the escaped fish were not documented for years after and likely are now extirpated (Williot, personal communication). Introduced exotic sturgeon in the Yangtze River are an identified threat to *A. sinensis* (Li *et al.,* 2009). Since the end of the 1990s, farmers began cage-farming many exotic sturgeon species in the Yangtze River (Wei *et al.,* 1997; Shi *et al.,* 2002). None of these legally farmed sturgeons (including *A. schrenckii, H. dauricus,* and their hybrids) are native to the Yangtze River system, so they could compete with native sturgeon. In 2006 the *A. sinensis* Emergency Center (Changshu City, Jiangsu Province) collected 221 young sturgeon from their fishery resources monitoring nets in the Yangtze River. Seventy percent were hybrids, while only 30 percent were pure *A. sinensis* (Chen, 2007). Liu (1995) notes that an estimated 90 percent of the eggs on the spawning site near the Gezhouba Dam are eaten by the bronze gudgeon, *Coreius heterodon,* and asserts as a result, the sturgeon population is further declining (Deng and Yan, 1991). No competition, disease or unusual predation threats have been identified for *A. mikadoi.*

Hybrid *H. dauricus* (crossed with *A. schrenckii*) are cultured in China (Li et al. 2011, Wei *et al.,* 2011) and considered by some to be a risk factor to the species status (Chelomina *et al.* 2008). About 35 percent of Chinese caviar production from 2007–2009 came from these hybrids. There is no documentation of interactions with hybrids, however. Investigations on ovaries by Svirskii (see Krykhtin and Svirskii, 1997a) showed that a parasite, *Polypodium hydroforme,* decreased the fecundity of *H. dauricus* by approximately 19 percent.

Inadequacy of Existing Regulatory Mechanisms

We identified inadequacy of existing regulatory mechanisms as a potential threat to each of the five species of sturgeon. We determined that this factor alone, or in combination with other factors, is currently contributing moderately to significantly to the risk of extinction for each species, with greater variability in the voting on this threat than for any of the other five threats (Meadows and Coll, 2013). Despite listing under CITES, and species-

specific domestic management and conservation measures, there remains an overall decline in wild sturgeon populations, with historical overutilization, poaching, and habitat destruction among the main causes. There are few regulations in place that are able to manage population size at sustainable levels. Only *A. sturio* is listed on CITES Appendix I, and thus has a commercial trade ban. Implementation of the CITES Appendix II listings for the other sturgeons has been challenging. CITES parties had to adopt resolutions to require range countries to declare coordinated annual export and catch quotas, develop marking and labeling systems, cooperate regionally, and, where possible, establish a system of registration or licensing or both for importers and exporters of caviar. Ten sturgeon species were considered under the CITES Review of Significant Trade process, which resulted in recommendations affecting Caspian Sea range countries. Studies of international trade (Raymakers, 2002; Ludwig, 2006) give evidence for a high proportion (7–25%) of caviar with the wrong species origin assigned and sold on the world market. Sturgeon stocks continued to decline and since 2008 wild capture export quotas under CITES are zero. In 2011, the CITES Secretariat noted that ''Despite the best efforts of the CITES community, it appears that the goal of legal and sustainable harvest of caviar . . . appears unattainable for the present.'' (CITES, 2011).

Given the low to very low numbers of reproductively mature adults and the relatively modest stocking efforts on a range-wide scale, the above regulations are not likely to be sufficient to sustainably manage these species without conservation protections. Moreover, it is currently unclear whether the range countries for the petitioned sturgeon species have the resources and personnel to enforce existing regulatory measures as reports of poaching and illegal trade are widespread. Compliance is another problem and requires more consolidated efforts. We seek more detailed information on efforts in these areas in our public comment process (see below).

Bycatch is a major current threat to *A. naccarii, A. sturio,* and *A. mikadoi,* but we are not aware of any regulations addressing this threat, though a voluntary program started in France has spread through much of the range of *A. sturio* (Michelet, 2011).

For *A. naccarii,* fishing is prohibited in the three regions of Italy where a recovery plan is in place: Lombardy, Emilia-Romagna and Veneto (Bronzi *et al.,* 2006). It is not otherwise protected by law in Italy or elsewhere in its range that we have identified. *Acipenser naccarii* is listed in Appendix II of the Bern Convention on the Conservation of European Wildlife and Natural Habitats. All countries that have signed the convention must promote national conservation policies, measures against pollution, and educational and informative measures. They must also co-ordinate efforts to protect at-risk species. For Appendix II species, the following is prohibited: all forms of deliberate capture and killing; the deliberate damage to or destruction of breeding or resting sites; deliberate disturbance, the deliberate destruction or taking of eggs from the wild or keeping these eggs even if empty; and the possession of and internal trade in these animals, alive or dead. While important and helpful, we conclude these regulatory mechanisms do not ensure the sustainability or status of this species because they are incomplete, and they may have enforcement difficulties.

Acipenser sturio is currently considered by the European community to be a critically endangered species. A recent revision of the status of *A. sturio* by the IUCN in 2009 concluded the species status is ''critically endangered'' (Freyhoff *et al.,* 2010). It is protected by all of the nations in its present distribution area, either by their national laws or by international conventions and European directives (Rosenthal *et al.,* 2007; Rochard, 2011). The following international conventions and directives protect the species: (1) Appendix I of CITES, which prohibits its international trade except for scientific research; (2) Appendix I of the Convention on Migratory Species (CMS); (3) Appendix II of the Bern Convention; (4) Appendix II of the European Council Directive on the Conservation of Natural Habitats and of Wild Fauna and Flora, which lists animal and plant species of community interest whose conservation requires the designation of special areas of conservation; and 5) the list of threatened and/or declining species under the Convention Protecting and Conserving the North-East Atlantic and its Resources, which sets protection priorities by its parties (Rochard, 2011). *Acipenser sturio* was included in Appendix II of the CMS in 1999. In 2005, it was added to Appendix I, which lists migratory species in danger of extinction. The European sturgeon is listed as a strictly protected species (Annex II) in the Convention on the Conservation of European Wildlife and Natural Habitats (Bern Convention). In European Community Law, especially the Habitat Directive, the species is listed among the animals of Community interest (Annex II) whose conservation requires the designation of Special Areas of Conservation (SAC) (Williot *et al.,* 2009). Eleven areas have been designated up to now, and six others are in the process of being approved (Rosenthal *et al.,* 2007). In 2003, the ''Regional Strategy for the Conservation and Sustainable Management of Sturgeon Populations of the Northwest Black Sea and Lower Danube River in accordance with CITES'' was signed by Serbia, Bulgaria, Romania and Ukraine (Rogin, 2011). The European action plan, which particularly relies on in situ conservation, ex situ measures, stocking of hatchery-reared young, and habitat restoration, was recently drafted and implementation has begun (Rosenthal *et al.,* 2007). Within its current range, conservation actions are in place to limit incidental captures and poaching, and to improve the protection of habitats (Williot *et al.,* 1997). A total ban on fishing and marketing of the species was applied in France in 1982 (Gessner, 2000). Despite these instruments currently in place, implementation is difficult due to lack of funds, fishermen who still catch and sell the species (Lepage and Rochard, 2011), and lack of knowledge or willingness of administrations in charge of management to enforce current regulations (Williot and Castelnaud, 2011). Williot *et al.* (2011c) also concluded that inadequate implementation of fisheries regulations and species conservation restrictions have inhibited the species conservation and recovery success. Today the main driver is the low number of individual fish (Gessner, personal communication).

In 1988, *A. sinensis* was listed as a state protected animal in class I in China (Wei *et al.,* 1997). In 1996, Yichang Chinese Sturgeon Nature Reserve was established to protect the spawning population. In 2002, a Chinese Sturgeon Nature Reserve in the Yangtze River estuary was established to protect juvenile sturgeons gathering there (Wei, 2010a). The effectiveness of these measures is unclear, but it is thought that poaching still occurs (Wei, 2010a).

Since 1983, *A. mikadoi* has been listed in the Red Data Book of the Russian Federation, which provides for a complete ban on fishing (Germany, 1998). The effectiveness of these measures is unclear, but given the population size, appears limited.

In the Russian Federation, a prohibition on the commercial catch of *H. dauricus* has been in place during 1923–1930, 1958–1976 and from 1984 to the present (Vaisman and Fomenko, 2007). However, a tolerance called ''controlled catch'' for incidental and scientific catches is allowed. These catches are the current source of caviar and sturgeon meat from the Amur River. The ''controlled catch'' is apparently not well defined and difficult to control and enforce (TRAFFIC, 2000). Experts and government officials have reported increasing pressure from illegal fishing practices and criminal activities around sturgeon poaching and black markets that have been reported in a large part of the range (Medetsky, 2000; Winchester, 2000). The current situation is not known. In China, Heilongjiang Province authorities issued protection and management regulations, such as gear restrictions, harvest size, closed seasons and areas, and the requirement of a fishing license in the early 1950s. These were renewed in 1982. The Ordinance of 1982 prescribed minimum size limits for *H. dauricus* at 200 cm or 65 kg. Fishing activities on the Heilong (Amur) River are prohibited from mid-June to mid-July. The protocol also established areas where fisheries are permanently prohibited. In 1991, 2,248 sturgeon fishing licenses were issued, and in 2000, the number was reduced to 1,850. However, the regulations have not been fully implemented (Wei *et al.,* 1997; Wei *et al.,* 2004) and do not appear to be effective enough to reverse the species decline.

Other Natural or Manmade Factors Affecting Its Continued Existence

We determine that other natural or manmade factors are potential threats to each of the five species of sturgeon, but the level of threat is generally no more than moderate, except for a high threat level for *A. sturio* (Meadows and Coll, 2013). Small population size is a problem to varying degrees for all petitioned species. Small population size can lead to loss of adaptation in species through genetic drift and Allee effects. Small populations are also subject to greater variation in population size and risk of extirpation from a variety of density-independent disasters. Climate change may impact all of the petitioned species, though sturgeon-specific studies and predictions are rare and there is great uncertainty. Hydrologic changes that are likely to affect spawning grounds are probably the most likely effect of climate change. Lassalle and Rochard (2009) estimated impacts of climate change to diadromous fishes in Europe, the Middle East and North Africa, and predicted that the majority of species would have range contractions, including *A. naccarii.*

Acipenser naccarii has been hybridized with *A. baerii* in captive breeding facilities (CITES 2000). These fish have been known to sporadically escape from rearing plants or angling ponds, or are released when they become too large for private aquaria (CITES, 2000). There is no documentation on the extent or potential damage of the introduction of these hybrids, but competition with hybrids is likely.

Acipenser sturio is vulnerable to overutilization due to its late age at first reproduction and multi-year reproductive cycle and low population size (Rosenthal *et al.,* 2007). Lassalle *et al.* (2011) modeled potential impacts of climate change on habitat availability throughout the species' range out to the year 2100. They found that much of the species' spawning habitat would be negatively affected, particularly in the southern part of its range. However, five basins where reintroductions are planned or occurring are predicted to remain suitable.

The long lifespan and late maturation of *A. sinensis* make it susceptible to overexploitation. Zhang *et al.* (2000) screened the nuclear genomes of 70 samples collected in the Yangtze River from 1995 to 1997 and found low genetic variability. Ship strikes and excessive sound have also been noted as threats for this species (Wang *et al.,* 2011). No other threats have been identified for *A. mikadoi.*

Huso dauricus is vulnerable to overutilization due to its late age at first reproduction and multi-year reproductive cycle.

Synergistic Effects

Recent research has shown that synergistic interactions among threats often lead to higher extinction risk than predicted based on the individual threats (Brook *et al.,* 2008). ''Like interactions within species assemblages, synergies among stressors form self-reinforcing mechanisms that hasten the dynamics of extinction. Ongoing habitat destruction and fragmentation are the primary drivers of contemporary extinctions, particularly in the tropical realm, but synergistic interactions with hunting, fire, invasive species and climate change are being revealed with increasing frequency'' (Brook *et al.,* 2008). ''[H]abitat loss can cause some extinctions directly by removing all individuals over a short period of time, but it can also be indirectly responsible for lagged extinctions by facilitating invasions, improving hunter access, eliminating prey, altering biophysical conditions and increasing inbreeding depression. Together, these interacting and self-reinforcing systematic and stochastic processes play a dominant role in driving the dynamics of population trajectories as extinction is approached'' (Brook *et al.,* 2008). For most of these sturgeon species it is likely that the interactive effects of the multiple threats identified herein are having multiplicative effects on extinction risk. In particular, habitat loss, range contractions, and decreased water quality are likely to interact in ways to multiplicatively increase the extinction risk of these species, especially as populations reach such small sizes that Allee effects, genetic drift, and disasters can dominate population dynamics. Studies to determine the specific magnitude of these synergistic effects are lacking for all five species. As a result, extinction risk analysis team members' scores varied significantly for this category (Meadows and Coll, 2013).

Overall Risk Summary

After considering the extinction risks for each of the five species of sturgeon, we have determined that *Acipenser naccarii, A. sturio, A. sinensis, A. mikadoi* and *Huso dauricus* are in danger of extinction throughout all of their ranges, largely due to (1) Present or threatened destruction, modification or curtailment of habitat, (2) overutilization for commercial, recreational, scientific, or educational purposes, and (3) inadequacy of existing regulatory mechanisms.

Protective Efforts

Section 4(b)(1)(A) of the ESA requires the Secretary, when making a listing determination for a species, to take into consideration those efforts, if any, being made by any State or foreign nation to protect the species. In judging the efficacy of not yet implemented efforts, or those existing protective efforts that are not yet fully effective, we rely on the Services' joint ''Policy for Evaluation of Conservation Efforts When Making Listing Decisions'' (''PECE''; 68 FR 15100; March 28, 2003). The PECE policy is designed to ensure consistent and adequate evaluation of whether any conservation efforts that have been recently adopted or implemented, but not yet proven to be successful, will result in recovering the species to the point at which listing is not warranted or contribute to forming the basis for listing a species as threatened rather than endangered. The PECE policy is expected to facilitate the development

of conservation efforts that sufficiently improve a species' status so as to make listing the species as threatened or endangered unnecessary.

The PECE policy establishes two basic criteria to use in evaluating efforts identified in conservations plans, conservation agreements, management plans or similar documents: (1) The certainty that the conservation efforts will be implemented; and (2) the certainty that the efforts will be effective. We evaluated conservation efforts we are aware of to protect and recover sturgeon that are either underway but not yet fully implemented, or are only planned. We seek additional information on other conservation efforts in our public comment process (see below).

We are aware of the stocking program in Italy for *A. naccarii,* as described in Bronzi *et al.* (2011a) and Meadows and Coll (2013). No reproduction of stocked fish has been confirmed. The certainty that this program will continue to be implemented in the future is unclear. Given this, it is impossible to determine whether these stocking efforts will be effective in conserving or improving the status of this species. In fact, as discussed above, stocking efforts can contribute to extinction risk if not conducted carefully, especially with consideration of suitable habitat and genetic composition of the donor populations. We are unaware of any other major conservation efforts for this species, though efforts to conserve *A. sturio* described below could help this species. However, these efforts are also not certain to be implemented.

A large number of conservation efforts are underway for *A. sturio.* Some are discussed in the above sections and accounted for in the extinction risk analysis. Other efforts are discussed here for historical continuity, but the effectiveness of the early efforts was fully considered in the extinction risk analysis above. Hatchery releases have occurred in a number of places starting in 1995 in France and 1996 in Germany (Kirschbaum *et al.,* 2000; Williot *et al.,* 2002b), with both countries cooperating extensively in these efforts (Williot and Kirschbaum 2011). The first results in France indicated that *A. sturio* is rather difficult to grow under controlled conditions compared to most other sturgeon species (Williot *et al.,* 1997). Kirschbaum *et al.* (2000) however, were more recently able to achieve growth rates in the German program similar to those in the wild, though captive temperatures were warmer. Williot and Castelnaud (2011) and Williot *et al.* (2011d) summarize conservation measures implemented for France. Williot *et al.* (2009) describe many years of efforts to establish a successful conservation hatchery program in France. Hatchery rearing first started in 1995 in a facility in the Gironde system in France, with successful artificial propagation only occurring in 1995 and 2007 (Williot *et al.,* 2009). Hatchlings (2000) and later fingerlings (5,000 of ~1g weight in June 1995 and 2,000 ~6.5 g in August 1995) were released in equal numbers into the Garonne and Dordogne Rivers from the first event (Williot *et al.,* 2009). The 2007 event was the first successful reproduction of fish reared in captivity their entire lives (Williot *et al.,* 2009). Since 2007, improved rearing success has resulted in successful propagation every year, with about 135,000 juveniles being released from the French facility through 2010 (Acolas *et al.,* 2011a; Rochard and Lambert, 2011). However, poor sperm quality and a limited number of reproductive females limit the ability to increase hatchery production and restrain genetic diversity (Tiedemann *et al.,* 2011).

Gessner (2000) documents conservation efforts in place in the late 1990s in Germany. In 1994, efforts to reestablish *A. sturio* in Germany were launched by scientists and aquaculturists at the Society to Save the Sturgeon, with Federal government support (Kirschbaum and Gessner, 2000). A broodstock program was developed with 1,600 animals donated from France. These broodstock fish, however, have low genetic diversity, as most of the fish are full siblings (Kirschbaum *et al.,* 2011). Kirschbaum *et al.* (2011) update the above information with discussion of more recent restoration efforts in Germany, which have most prominently included the release of 200 juvenile fish from 2008–2010. According to Gessner (personal communication), that number has reached 10,000 juveniles through 2013.

European countries have completed a draft conservation action plan for the species (Rosenthal *et al.,* 2007; Moreau, 2011) that details specific objectives and actions for the species' conservation. Nevertheless, the plan guarantees no funding and thus implementation, let alone effectiveness, is highly uncertain. The certainty that all of the above described conservation efforts for *A. sturio* will be implemented or continued is unclear. Given all of the above, it is impossible to determine whether these stocking efforts will be effective in conserving or improving the status of this species.

We are aware of the stocking program for *A. sinensis* as described above and in Bronzi *et al.* (2011a) and Meadows and Coll (2013). The certainty that this program will continue to be implemented in the future is unclear. The small amount of spawning habitat available likely limits the potential effectiveness of this program. Given all of the above, it is impossible to determine whether these stocking efforts will be effective in conserving or improving the status of this species.

An artificial propagation programs exists for *A. mikadoi,* and reintroductions have occurred with a total of 60 individuals being released in 2005 and 2009 into Lake Tunaicha in the southeast of Sakhalin (Koshelev *et al.,* 2012). No reproduction of stocked fish has been confirmed. The certainty that this program will continue to be implemented in the future is unclear. Given all of the above, it is impossible to determine whether these stocking efforts will be effective in conserving or improving the status of this species.

We are aware of the stocking programs for *H. dauricus* as described above and in Bronzi *et al.* (2011a) and Meadows and Coll (2013). Russia cultures pure *H. dauricus,* releasing about 1 million per year in the late 1990s (Chebanov and Billard, 2001) and with only small production continuing through the 2000s (Li *et al.,* 2009). The species is also cultured in China and released into the Amur River in unknown quantities (Wei *et al.,* 2004). No reproduction of stocked fish has been confirmed. The certainty that these programs will continue to be implemented in the future is unclear. Given all of the above, it is impossible to determine whether these stocking efforts will be effective in conserving or improving the status of this species.

We are aware of no other conservation efforts that have been recently adopted or implemented, but not yet proven to be successful, that could modify the risk of extinction for any of these species and that would require consideration under the PECE policy. Therefore, we conclude that the identified conservation efforts do not alter the extinction risk assessments for any of the five petitioned sturgeon species.

Proposed Determination

Section 4(b)(1) of the ESA requires that we make listing determinations based solely on the best scientific and commercial data available after conducting a review of the status of the species and taking into account those efforts, if any, being made by any state or foreign nation, or political subdivisions thereof, to protect and conserve the species. We have reviewed the best available scientific and

commercial information, including the petition, and the information in the review of the status of the five species of sturgeon, and we have consulted with species experts. We are responsible for determining whether *Acipenser naccarii* (Adriatic sturgeon), *A. sturio* (European sturgeon), *A. sinensis* (Chinese sturgeon), *A. mikadoi* (Sakhalin sturgeon) and *Huso dauricus* (Kaluga sturgeon) are threatened or endangered under the ESA (16 U.S.C. 1531 *et seq.*). Accordingly, we have followed a stepwise approach as outlined above in making this listing determination for these five species of sturgeon. We have determined that *Acipenser naccarii* (Adriatic sturgeon), *A. sturio* (European sturgeon), *A. sinensis* (Chinese sturgeon), *A. mikadoi* (Sakhalin sturgeon) and *Huso dauricus* (Kaluga sturgeon) constitute species as defined by the ESA.

Based on the information presented, we find that all five species of sturgeon are in danger of extinction throughout all of their ranges. We assessed the ESA section 4(a)(1) factors and conclude the Adriatic, European, Chinese, Sakhalin and Kaluga sturgeon all face ongoing threats from habitat alteration, overutilization for commercial and recreational purposes, and the inadequacy of existing regulatory mechanisms throughout their ranges. *Acipenser sturio* also face high risks from its life history and published predictions of the effects of climate change (Lassalle *et al.,* 2011). All of the threats attributed to the species' decline are ongoing except the largely historical threat from directed fisheries. After considering efforts being made to protect these sturgeon, we could not conclude that the proposed conservation efforts would alter the extinction risk for any of these five species.

Effects of Listing

Conservation measures provided for species listed as endangered or threatened under the ESA include recovery actions (16 U.S.C. 1533(f)), concurrent designation of critical habitat if prudent and determinable (16 U.S.C. 1533(a)(3)(A)); Federal agency requirements to consult with NMFS under Section 7 of the ESA to ensure their actions do not jeopardize the species or result in adverse modification or destruction of critical habitat should it be designated (16 U.S.C. 1536); and prohibitions on taking (16 U.S.C. 1538). Recognition of the species' plight through listing promotes conservation actions by Federal and state agencies, foreign entities, private groups, and individuals. Therefore, the main effects of this proposed listing are prohibitions on take, including export and import.

Identifying Section 7 Consultation Requirements

Section 7(a)(2) (16 U.S.C. 1536(a)(2)) of the ESA and NMFS/USFWS regulations require Federal agencies to consult with us to ensure that activities they authorize, fund, or carry out are not likely to jeopardize the continued existence of listed species or destroy or adversely modify critical habitat. Section 7(a)(2) (16 U.S.C. 1536(a)(2)) of the ESA and NMFS/USFWS regulations also require Federal agencies to confer with us on actions likely to jeopardize the continued existence of species proposed for listing, or that result in the destruction or adverse modification of proposed critical habitat. It is possible that the listing of the five species of sturgeon under the ESA may create a minor increase in the number of section 7 consultations, though consultations are likely to be rare given that these species mostly occur in foreign territorial waters.

Critical Habitat

Critical habitat is defined in section 3 of the ESA (16 U.S.C. 1532(5)) as: (1) The specific areas within the geographical area occupied by a species, at the time it is listed in accordance with the ESA, on which are found those physical or biological features (a) essential to the conservation of the species and (b) that may require special management considerations or protection; and (2) specific areas outside the geographical area occupied by a species at the time it is listed upon a determination that such areas are essential for the conservation of the species. ''Conservation'' means the use of all methods and procedures needed to bring the species to the point at which listing under the ESA is no longer necessary. Section 4(a)(3)(A) of the ESA (16 U.S.C. 1533(a)(3)(A)) requires that, to the extent prudent and determinable, critical habitat be designated concurrently with the listing of a species. However, critical habitat shall not be designated in foreign countries or other areas outside U.S. jurisdiction (50 CFR 424.12 (h)).

The best available scientific and commercial data as discussed above identify the geographical areas occupied by *Acipenser naccarii, A. sturio, A. sinensis, A. mikadoi* and *Huso dauricus* as being entirely outside U.S. jurisdiction, so we cannot designate critical habitat for these species. We can designate critical habitat in unoccupied areas in the United States if the area(s) are determined by the Secretary to be essential for the conservation of the species. Regulations at 50 CFR 424.12 (e) specify that we shall designate as critical habitat areas outside the geographical range presently occupied by the species only when the designation limited to its present range would be inadequate to ensure the conservation of the species.

The best available scientific and commercial information on these species does not indicate that U.S. waters provide any specific essential biological function for any of them. Based on the best available information, we have not identified unoccupied area(s) that are currently essential to the conservation of any of the sturgeons proposed for listing. Therefore, based on the available information, we do not intend to designate critical habitat for *Acipenser naccarii, A. sturio, A. sinensis, A. mikadoi* or *Huso dauricus.*

Identification of Those Activities That Would Constitute a Violation of Section 9 of the ESA

On July 1, 1994, NMFS and FWS published a policy (59 FR 34272) that requires us to identify, to the maximum extent practicable at the time a species is listed, those activities that would or would not constitute a violation of section 9 of the ESA. Because we are proposing to list all five sturgeons as endangered, all of the prohibitions of Section 9(a)(10) of the ESA will apply to all five species. These include prohibitions against the import, export, use in foreign commerce, or ''take'' of the species. Take is defined as ''to harass, harm, pursue, hunt, shoot, wound, kill, trap, capture, or collect, or to attempt to engage in any such conduct.'' These prohibitions apply to all persons subject to the jurisdiction of the United States, including in the United States, its territorial sea, or on the high seas. The intent of this policy is to increase public awareness of the effects of this listing on proposed and ongoing activities within the species' range. Activities that we believe could result in a violation of section 9 prohibitions of these five sturgeons include, but are not limited to, the following:

(1) Take within the United States or its territorial sea, or upon the high seas;

(2) Possessing, delivering, transporting, or shipping any sturgeon part;

(3) Delivering, receiving, carrying, transporting, or shipping in interstate or foreign commerce any sturgeon or sturgeon part, in the course of a commercial activity;

(4) Selling or offering for sale in interstate commerce any part, except antique articles at least 100 years old;

(5) Importing or exporting sturgeon or any sturgeon part to or from any country;

(6) Releasing captive sturgeon into the wild. Although sturgeon held non-commercially in captivity at the time of listing are exempt from certain prohibitions, the individual animals are considered listed and afforded most of the protections of the ESA, including most importantly, the prohibition against injuring or killing. Release of a captive animal has the potential to injure or kill the animal. Of an even greater conservation concern, the release of a captive animal has the potential to affect wild populations of native sturgeon through introduction of diseases or inappropriate genetic mixing;

(7) Harming captive sturgeon by, among other things, injuring or killing a captive sturgeon, through experimental or potentially injurious veterinary care or conducting research or breeding activities on captive sturgeon, outside the bounds of normal animal husbandry practices. Captive breeding of sturgeon is considered experimental and potentially injurious. Furthermore, the production of sturgeon progeny has conservation implications (both positive and negative) for wild populations. Experimental or potentially injurious veterinary procedures and research or breeding activities of sturgeon may, depending on the circumstances, be authorized under an ESA 10(a)(1)(A) permit for scientific research or the enhancement of the propagation or survival of the species.

We will identify, to the extent known at the time of the final rule, specific activities that will not be considered likely to result in a violation of section 9 of the ESA. Although not binding, we are considering the following actions, depending on the circumstances, as not being prohibited by ESA Section 9:

(1) Take of a sturgeon authorized by an ESA section 10(a)(1)(A) permit authorized by, and carried out in accordance with the terms and conditions of an ESA section 10(a)(1)(A) permit issued by NMFS for purposes of scientific research or the enhancement of the propagation or survival of the species;

(2) Continued possession of sturgeon parts that were in possession at the time of listing. Such parts may be non-commercially exported or imported; however the importer or exporter must be able to provide evidence to show that the parts meet the criteria of ESA section 9(b)(1) (i.e., held in a controlled environment at the time of listing, in a non-commercial activity);

(3) Continued possession of live sturgeon that were in captivity or in a controlled environment (e.g., in aquaria) at the time of this listing, so long as the prohibitions under ESA section 9(a)(1) are not violated. Facilities must provide evidence that the sturgeon were in captivity or in a controlled environment prior to listing. We suggest such facilities submit information to us on the sturgeon in their possession (e.g., size, age, description of animals, and the source and date of acquisition) to establish their claim of possession (see **FOR FURTHER INFORMATION CONTACT**); and

(4) Provision of care for live sturgeon that were in captivity at the time of listing. These individuals are still protected under the ESA and may not be killed or injured, or otherwise harmed, and, therefore, must receive proper care. Normal care of captive animals necessarily entails handling or other manipulation of the animals, and we do not consider such activities to constitute take or harassment of the animals so long as adequate care, including veterinary care, such as confining, tranquilizing, or anesthetizing sturgeon when such practices, procedures, or provisions are not likely to result in injury, is provided; and

(5) Any interstate and foreign commerce trade of sturgeon already in captivity. Section 11(f) of the ESA gives NMFS authority to promulgate regulations that may be appropriate to enforce the ESA. NMFS may promulgate future regulations to regulate trade or holding of these sturgeon, if necessary. NMFS will provide the public with the opportunity to comment on future proposed regulations.

Role of Peer Review

In December 2004, the Office of Management and Budget (OMB) issued a Final Information Quality Bulletin for Peer Review establishing a minimum peer review standard. Similarly, a joint NMFS/FWS policy (59 FR 34270; July 1, 1994) requires us to solicit independent expert review from qualified specialists, concurrent with the public comment period. The intent of the peer review policy is to ensure that listings are based on the best scientific and commercial data available. We solicited peer review comments on the status review report from 12 outside scientists and two NMFS scientists familiar with sturgeons. We received comments from four of these scientists and their comments are incorporated into the status review report and this document. Prior to a final listing, we will solicit the expert opinions of several qualified specialists selected from the academic and scientific community, Federal and State agencies, and the private sector on these listing recommendations to ensure the best biological and commercial information is being used in the decision-making process, as well as to ensure that reviews by recognized experts are incorporated into the review process of rulemakings developed in accordance with the requirements of the ESA.

We will consider peer review comments in making our final determination, and include a summary of the comments and recommendations, if a final rule is published.

References

A complete list of the references used in this proposed rule is available upon request (see **ADDRESSES**).

Classification

National Environmental Policy Act

The 1982 amendments to the ESA, in section 4(b)(1)(A), restrict the information that may be considered when assessing species for listing. Based on this limitation of criteria for a listing decision and the opinion in *Pacific Legal Foundation* v. *Andrus,* 675 F. 2d 825 (6th Cir. 1981), NMFS has concluded that ESA listing actions are not subject to the environmental assessment requirements of the National Environmental Policy Act (NEPA) (See NOAA Administrative Order 216–6).

Executive Order 12866, Regulatory Flexibility Act, and Paperwork Reduction Act

As noted in the Conference Report on the 1982 amendments to the ESA, economic impacts cannot be considered when assessing the status of a species. Therefore, the economic analysis requirements of the Regulatory Flexibility Act are not applicable to the listing process. In addition, this proposed rule is exempt from review under Executive Order 12866. This proposed rule does not contain a collection-of-information requirement for the purposes of the Paperwork Reduction Act.

Executive Order 13132, Federalism

In accordance with E.O. 13132, we determined that this proposed rule does not have significant Federalism effects and that a Federalism assessment is not required. In keeping with the intent of the Administration and Congress to provide continuing and meaningful dialogue on issues of mutual state and Federal interest, this proposed rule will be given to the relevant governmental agencies in the countries in which the

species occurs, and they will be invited to comment. We will confer with the U.S. Department of State to ensure appropriate notice is given to foreign nations within the range of all five species. As the process continues, we intend to continue engaging in informal and formal contacts with the U.S. State Department, giving careful consideration to all written and oral comments received.

Public Comments Solicited

We intend that any final action resulting from this proposal will be as accurate as possible and informed by the best available scientific and commercial information. Therefore, we request comments or information from the public, other concerned governmental agencies, the scientific community, industry, environmental groups or any other interested party concerning this proposed rule. We particularly seek comments containing:

(1) Information concerning the location(s) of any sightings or captures of the species;

(2) Information concerning the threats to the species;

(3) Taxonomic information on the species;

(4) Biological information (life history, genetics, population connectivity, etc.)

(5) Efforts being made to protect the species throughout their current ranges;

(6) Information on the commercial trade of these species; and

(7) Historical and current distribution and abundance and trends.

We request that all information be accompanied by: (1) Supporting documentation such as maps, bibliographic references, or reprints of pertinent publications; and (2) the submitter's name, address, and any association, institution, or business that the person represents.

Public hearing requests must be made by December 16, 2013.

List of Subjects in 50 CFR Part 224

Administrative practice and procedure, Endangered and threatened species, Exports, Imports, Reporting and record keeping requirements, Transportation.

Dated: October 22, 2013.

Alan D. Risenhoover,

Director, Office of Sustainable Fisheries, performing the functions and duties of the Deputy Assistant Administrator for Regulatory Programs, National Marine Fisheries Service.

For the reasons set out in the preamble, 50 CFR part 224 is proposed to be amended as follows:

PART 224—ENDANGERED MARINE AND ANADROMOUS SPECIES

■ 1. The authority citation for part 224 continues to read as follows:

Authority: 16 U.S.C. 1531–1543 and 16 U.S.C 1361 *et seq.*

■ 2. In § 224.101, paragraph (a), add entries for five species at the end of the table to read as follows:

§ 224.101 Enumeration of endangered marine and anadromous species.

* * * * *

(a) * * *.

Species [1]		Where listed	Citation(s) for listing determination(s)	Citation(s) for critical habitat designation(s)
Common name	Scientific name			
*	*	*	*	*
Adriatic sturgeon	*Acipenser naccarii*	Everywhere Found	*Insert **Federal Register** citation and date when published as a final rule*].	NA
European sturgeon	*Acipenser sturio*	Everywhere Found	*Insert **Federal Register** citation and date when published as a final rule*].	NA
Chinese sturgeon	*Acipenser sinensis*	Everywhere Found	*Insert **Federal Register** citation and date when published as a final rule*].	NA
Sakhalin sturgeon	*Acipenser mikadoi*	Everywhere Found	*Insert **Federal Register** citation and date when published as a final rule*].	NA
Kaluga sturgeon	*Huso dauricus*	Everywhere Found	*Insert **Federal Register** citation and date when published as a final rule*].	NA

[1] Species includes taxonomic species, subspecies, distinct population segments (DPSs) (for a policy statement, see 61 FR 4722, February 7, 1996), and evolutionarily significant units (ESUs) (for a policy statement, see 56 FR 58612, November 20, 1991.

* * * * *

[FR Doc. 2013–25358 Filed 10–30–13; 8:45 am]

BILLING CODE 3510–22–P

Notices

Federal Register

Vol. 78, No. 211

Thursday, October 31, 2013

This section of the FEDERAL REGISTER contains documents other than rules or proposed rules that are applicable to the public. Notices of hearings and investigations, committee meetings, agency decisions and rulings, delegations of authority, filing of petitions and applications and agency statements of organization and functions are examples of documents appearing in this section.

DEPARTMENT OF AGRICULTURE

Forest Service

Land Between The Lakes Advisory Board

AGENCY: Forest Service, USDA.

ACTION: Notice of meeting.

SUMMARY: The Land Between The Lakes Advisory Board will hold a meeting in Golden Pond, Kentucky. Notice of this meeting is in compliance with the Federal Advisory Committee Act (5 U.S.C. App 2). The meeting is open to the public and the agenda will focus on existing Environmental Education programs and improving engagement with regional school groups.

DATES: The meeting will be held on Thursday, November 14, 2013, from 9:00 a.m. to approximately 4:00 p.m., Central Standard Time.

ADDRESSES: The meeting will be held at the Administration Office of Land Between The Lakes, 100 Van Morgan Drive, Golden Pond, Kentucky.

Written comments may be submitted as described under Supplementary Information. All comments, including names and addresses when provided, are placed in the record and are available for public inspection and copying.

FOR FURTHER INFORMATION CONTACT: Linda L. Taylor, Advisory Board Liaison, by phone at 270–924–2002.

Individuals who use telecommunication devices for the deaf (TDD) may call the Federal Information Relay Service (FIRS) at 1–800–877–8339 between 8:00 a.m. and 8:00 p.m., Eastern Standard Time, Monday through Friday.

SUPPLEMENTARY INFORMATION: Written comments are invited and must be sent to Tina Tilley, Area Supervisor, Land Between The Lakes, 100 Van Morgan Drive, Golden Pond, Kentucky 42211. Comments must be received by November 7, 2013 for copies to be provided to the members for this meeting. Board members will review written comments received, and at their request, oral clarification may be requested for a future meeting.

Meeting Accommodations: If you are a person requiring reasonable accommodation, please make requests in advance for sign language interpreting, assistive listening devices or other reasonable accommodation for access to the facility or proceedings by contacting the person listed in the section titled For Further Information Contact. All reasonable accommodation requests are managed on a case by case basis.

Dated: October 25, 2013.

Tina R. Tilley,

Area Supervisor, Land Between The Lakes.

[FR Doc. 2013–25878 Filed 10–30–13; 8:45 am]

BILLING CODE 3410–11–P

DEPARTMENT OF COMMERCE

Submission for OMB Review; Comment Request

The Department of Commerce will submit to the Office of Management and Budget (OMB) for clearance the following proposal for collection of information under the provisions of the Paperwork Reduction Act (44 U.S.C. Chapter 35).

Agency: National Oceanic and Atmospheric Administration (NOAA).

Title: NOAA Constituent Engagement Survey.

OMB Control Number: 0648–0615.

Form Number(s): NA.

Type of Request: Regular submission (revision and extension of a current information collection).

Number of Respondents: 650.

Average Hours per Response: 20 minutes.

Burden Hours: 217.

Needs and Uses: This request is for revision and extension of a current information collection. NOAA supplies the nation with information, products and services that are essential public goods used in public and private sectors, science institutions and households around the world. Because NOAA's information, products and services are important to both the nation as a whole and to the daily lives of U.S. citizens, NOAA's Science Advisory Board (SAB) has identified a need for more effective two-way communication between its programs and the customers and clients it serves. This survey instrument will be used by the National Sea Grant Program to obtain information used to assess NOAA's accessibility, responsiveness and respect for partners. These parameters are three of the seven parameters included in the Kellogg Engagement Test, which the SAB recommended NOAA use for assessing engagement with constituents. One objective of the survey is to collect responses to provide NOAA Sea Grant with information and feedback from its constituents that will lead to greater emphasis placed on the needs of NOAA Sea Grant partners, techniques to improve the products and services, and general improvement in the accessibility and responsiveness of NOAA Sea Grant to constituents.

Revision: The survey will be conducted by the Sea Grant Program rather than the Office of Education and the Gulf of Mexico Regional Collaboration Team, as it was originally.

Affected Public: Individuals or households; business or other for-profit organizations; not-for-profit institutions; state, local or tribal government.

Frequency: Annually.

Respondent's Obligation: Voluntary.

OMB Desk Officer: OIRA_Submission@omb.eop.gov.

Copies of the above information collection proposal can be obtained by calling or writing Jennifer Jessup, Departmental Paperwork Clearance Officer, (202) 482–0336, Department of Commerce, Room 6616, 14th and Constitution Avenue NW., Washington, DC 20230 (or via the Internet at *JJessup@doc.gov*).

Written comments and recommendations for the proposed information collection should be sent within 30 days of publication of this notice to *OIRA_Submission@omb.eop.gov.*

Dated: October 25, 2013.

Gwellnar Banks,

Management Analyst, Office of the Chief Information Officer.

[FR Doc. 2013–25850 Filed 10–30–13; 8:45 am]

BILLING CODE 3510–KA–P

DEPARTMENT OF COMMERCE

Bureau of Industry and Security

Materials Technical Advisory Committee; Notice of Open Meeting

The Materials Technical Advisory Committee will meet on November 14, 2013, 10:00 a.m., Herbert C. Hoover Building, Room 3884, 14th Street between Constitution & Pennsylvania Avenues NW., Washington, DC. The Committee advises the Office of the Assistant Secretary for Export Administration with respect to technical questions that affect the level of export controls applicable to materials and related technology.

Agenda

Open Session

1. Opening Remarks and Introductions.
2. Remarks from BIS senior management and export control reform update.
3. Presentation from DuPont on the challenges that license conditions can bring and a discussion on recent efforts to make conditions more industry friendly.
4. Report of Composite Working Group.
5. Report of Biological and Pump/Valves Working Group.
6. Report on regime-based activities.
7. SHUTDOWN Feedback.
8. Public Comments and New Business.

The open session will be accessible via teleconference to 20 participants on a first come, first serve basis. To join the conference, submit inquiries to Ms. Yvette Springer at *Yvette.Springer@bis.doc.gov* no later than November 7, 2013.

A limited number of seats will be available during the public session of the meeting. Reservations are not accepted. To the extent time permits, members of the public may present oral statements to the Committee. The public may submit written statements at any time before or after the meeting. However, to facilitate distribution of public presentation materials to Committee members, the Committee suggests that presenters forward the public presentation materials prior to the meeting to Ms. Springer via email.

For more information, call Yvette Springer at (202) 482–2813.

Dated: October 28, 2013.

Yvette Springer,

Committee Liaison Officer.

[FR Doc. 2013–25926 Filed 10–30–13; 8:45 am]

BILLING CODE 3510–JT–P

DEPARTMENT OF COMMERCE

International Trade Administration

[C–570–995]

Grain-Oriented Electrical Steel from the People's Republic of China: Initiation of Countervailing Duty Investigation

AGENCY: Enforcement and Compliance, formerly Import Administration, International Trade Administration, Department of Commerce.

DATES: *Effective Date:* October 31, 2013.

FOR FURTHER INFORMATION CONTACT: Yasmin Nair at (202) 482–3813 or Angelica Mendoza at (202) 482–3019, AD/CVD Operations, Enforcement and Compliance, International Trade Administration, Department of Commerce, 14th Street and Constitution Avenue NW., Washington, DC 20230.

SUPPLEMENTARY INFORMATION:

The Petition

On September 18, 2013, the Department of Commerce (the Department) received a countervailing duty (CVD) petition concerning imports of grain-oriented electrical steel (GOES) from the People's Republic of China (PRC), filed in proper form, on behalf of AK Steel Corporation (AK Steel), Allegheny Ludlum, LLC (Allegheny Ludlum), as well as the United Steelworkers, which represents employees of Allegheny Ludlum that are engaged in the production of GOES in the United States (collectively, the petitioners).[1] The CVD petition was accompanied by an antidumping duty (AD) petition with respect to seven countries.[2] The petitioners are domestic producers of GOES. On September 23, 2013, the Department requested information and clarification for certain portions of the Petitions.[3] The petitioners filed their response to this request on September 26, 2013.[4]

In accordance with section 702(b)(1) of the Tariff Act of 1930, as amended (the Act), the petitioners allege that the Government of the PRC (GOC) is providing countervailable subsidies (within the meaning of sections 701 and 771(5) of the Act) with respect to imports of GOES from the PRC, and that imports of GOES from the PRC are materially injuring, and threaten material injury to, the domestic industry producing GOES in the United States. The Department finds that the petitioners filed the Petition on behalf of the domestic industry because the petitioners are interested parties as defined in sections 771(9)(C) and (D) of the Act, and that the petitioners have demonstrated sufficient industry support with respect to the initiation of the investigation the petitioners are requesting.[5]

Period of Investigation

The period of investigation is January 1, 2012, through December 31, 2012.

Scope of Investigation

The product covered by this investigation is GOES from the PRC. For a full description of the scope of this investigation, *see* ''Scope of Investigation'' at Appendix I of this notice.

Comments on Scope of Investigation

During our review of the Petition, the Department issued questions to, and received responses from, the petitioners pertaining to the proposed scope in order to ensure that the scope language in the Petitions would be an accurate reflection of the products for which the domestic industry is seeking relief. As discussed in the Preamble to the regulations,[6] we are setting aside a period for interested parties to raise issues regarding product coverage. The Department encourages interested parties to submit such comments by 5:00 p.m. EST on November 13, 2013. All comments must be filed on the records of the PRC CVD investigation, as well as the concurrent PRC, Czech Republic, Germany, Japan, Republic of Korea, Poland, and the Russian Federation (Russia) AD investigations.

Filing Requirements

All submissions to the Department must be filed electronically using Enforcement and Compliance's Antidumping and Countervailing Duty Centralized Electronic Service System (''IA ACCESS''). An electronically filed document must be received successfully in its entirety by the time and date

[1] *See* Petition for the Imposition of Countervailing Duties on imports of Grain-Oriented Electrical Steel from the People's Republic of China, dated September 18, 2013 (CVD Petition or Petition).

[2] *See* Petition for the Imposition of Antidumping Duties on imports of Grain-Oriented Electrical Steel from the People's Republic of China, the Czech Republic, the Federal Republic of Germany, Japan, the Republic of Korea, Poland, and the Russian Federation, dated September 18, 2013 (AD Petition) (collectively referred to as ''Petitions'').

[3] *See* Petition for the Imposition of Countervailing Duties on Grain-Oriented Electrical Steel from the People's Republic of China: Supplemental Questions, dated September 23, 2013.

[4] *See* Petitioners' Response to Commerce Department Request for Petition Clarifications—Grain-Oriented Electrical Steel from the People's Republic of China, dated September, 26, 2013.

[5] *See* ''Determination of Industry Support for the Petition'' below.

[6] *See Antidumping Duties; Countervailing Duties,* 62 FR 27296, 27323 (May 19, 1997).

noted above. Documents excepted from the electronic submission requirements must be filed manually (*i.e.,* in paper form) with Enforcement and Compliance's APO/Dockets Unit, Room 1870, Department of Commerce, 14th Street and Constitution Avenue NW., Washington, DC 20230, and stamped with the date and time of receipt by the deadline noted above.[7]

Consultations

Pursuant to section 702(b)(4)(A)(ii) of the Act, the Department invited representatives of the GOC for consultations with respect to the Petition.[8] Consultations were held with the GOC on October 21, 2013.[9] The memorandum is on file electronically via IA ACCESS.[10]

Determination of Industry Support for the Petition

Section 702(b)(1) of the Act requires that a petition be filed on behalf of the domestic industry. Section 702(c)(4)(A) of the Act provides that a petition meets this requirement if the domestic producers or workers who support the petition account for: (i) At least 25 percent of the total production of the domestic like product; and (ii) more than 50 percent of the production of the domestic like product produced by that portion of the industry expressing support for, or opposition to, the petition. Moreover, section 702(c)(4)(D) of the Act provides that, if the petition does not establish support of domestic producers or workers accounting for more than 50 percent of the total production of the domestic like product, the Department shall: (i) Poll the industry or rely on other information in order to determine if there is support for the petition, as required by subparagraph (A); or (ii) determine industry support using a statistically valid sampling method to poll the ''industry.''

Section 771(4)(A) of the Act defines the ''industry'' as the producers as a whole of a domestic like product. Thus, to determine whether a petition has the requisite industry support, the statute directs the Department to look to producers and workers who produce the domestic like product. The United States International Trade Commission (ITC), which is responsible for determining whether ''the domestic industry'' has been injured, must also determine what constitutes a domestic like product in order to define the industry. While both the Department and the ITC must apply the same statutory definition regarding the domestic like product (*see* section 771(10) of the Act), they do so for different purposes and pursuant to a separate and distinct authority. In addition, the Department's determination is subject to limitations of time and information. Although this may result in different definitions of the like product, such differences do not render the decision of either agency contrary to law.[11]

Section 771(10) of the Act defines the domestic like product as ''a product which is like, or in the absence of like, most similar in characteristics and uses with, the article subject to an investigation under this title.'' Thus, the reference point from which the domestic like product analysis begins is ''the article subject to an investigation'' (*i.e.,* the class or kind of merchandise to be investigated, which normally will be the scope as defined in the Petition).

With regard to the domestic like product, the petitioners do not offer a definition of the domestic like product distinct from the scope of the investigation. Based on our analysis of the information submitted on the record, we have determined that GOES constitutes a single domestic like product and we have analyzed industry support in terms of that domestic like product.[12]

In determining whether the petitioners have standing under section 702(c)(4)(A) of the Act, we considered the industry support data contained in the Petition with reference to the domestic like product as defined in the ''Scope of the Investigation,'' in Appendix I of this notice. To establish industry support, the petitioners provided their own production of the domestic like product in 2012.[13] The petitioners state that there are no other known producers of GOES in the United States; therefore, the Petition is supported by 100 percent of the U.S. industry.[14]

Our review of the data provided in the Petition and other information readily available to the Department indicates that the petitioners have established industry support.[15] First, the Petition established support from domestic producers (or workers) accounting for more than 50 percent of the total production of the domestic like product and, as such, the Department is not required to take further action in order to evaluate industry support (*e.g.,* polling).[16] Second, the domestic producers (or workers) have met the statutory criteria for industry support under section 702(c)(4)(A)(i) of the Act because the domestic producers (or workers) who support the Petition account for at least 25 percent of the total production of the domestic like product.[17] Finally, the domestic producers (or workers) have met the statutory criteria for industry support under section 702(c)(4)(A)(ii) of the Act because the domestic producers (or workers) who support the Petition account for more than 50 percent of the production of the domestic like product produced by that portion of the industry expressing support for, or opposition to, the Petition.[18] Accordingly, the Department determines that the Petition was filed on behalf of the domestic industry within the meaning of section 702(b)(1) of the Act.

The Department finds that the petitioners filed the Petition on behalf of the domestic industry because they are interested parties as defined in sections 771(9)(C) and (D) of the Act and they have demonstrated sufficient industry support with respect to the CVD

[7] *See http://www.gpo.gov/fdsys/pkg/FR-2011-07-06/pdf/2011-16352.pdf* for details of the Department's Electronic Filing Requirements, which went into effect on August 5, 2011. Information regarding IA ACCESS assistance can be found at *https://iaaccess.trade.gov/help.aspx* and a handbook can be found at *https://iaaccess.trade.gov/help/Handbook%20on%20Electronic%20Filing%20Procedures.pdf.*

[8] *See* Letter of Invitation Regarding Countervailing Duty Petition on Grain-Oriented Electrical Steel from the People's Republic of China, dated September 19, 2013.

[9] *See* Ex-Parte Memorandum, ''Consultations with Official from the Government of the People's Republic of China on the Countervailing Duty Petition regarding Grain-Oriented Electrical Steel from the People's Republic of China,'' dated October 22, 2013.

[10] *See supra* note 7 for information pertaining to IA ACCESS.

[11] *See USEC, Inc.* v. *United States,* 132 F. Supp. 2d 1, 8 (CIT 2001) (citing *Algoma Steel Corp., Ltd.* v. *United States,* 688 F. Supp. 639, 644 (CIT 1988), *aff'd* 865 F.2d 240 (Fed. Cir. 1989)).

[12] For a discussion of the domestic like product analysis in this case, *see* Countervailing Duty Investigation Initiation Checklist: Grain-Oriented Electrical Steel from the People's Republic of China (PRC CVD Initiation Checklist), at Attachment II, Analysis of Industry Support for the Petitions Covering Grain-Oriented Electrical Steel from the People's Republic of China, Czech Republic, Germany, Japan, the Republic of Korea, Poland, and the Russian Federation. These checklists are dated concurrently with this notice and on file electronically via IA ACCESS. Documents filed via IA ACCESS are also accessible in the Central Records Unit (CRU), Room 7046 of the main Department of Commerce building.

[13] *See* Volume I of the Petition, at 4.

[14] *Id.* at 1–3.

[15] *See* PRC CVD Initiation Checklist, at Attachment II.

[16] *See* section 702(c)(4)(D) of the Act; *see also* PRC CVD Initiation Checklist, at Attachment II.

[17] *See* PRC CVD Initiation Checklist, at Attachment II.

[18] *Id.*

investigation that they are requesting the Department initiate.[19]

Injury Test

Because the PRC is a ''Subsidies Agreement Country'' within the meaning of section 701(b) of the Act, section 701(a)(2) of the Act applies to this investigation. Accordingly, the ITC must determine whether imports of the subject merchandise from the PRC materially injure, or threaten material injury to, a U.S. industry.

Allegations and Evidence of Material Injury and Causation

The petitioners allege that imports of the subject merchandise are benefitting from countervailable subsidies and that such imports are causing, or threaten to cause, material injury to the U.S. industry producing the domestic like product. The petitioners allege that subject imports exceed the negligibility threshold provided for under section 771(24)(A) of the Act.[20]

The petitioners contend that the industry's injured condition is illustrated by reduced market share; underselling and price depression or suppression; lost sales and revenues; decline in production, capacity utilization, and shipments; reduced employment variables; and decline in financial performance.[21] We have assessed the allegations and supporting evidence regarding material injury, threat of material injury, and causation, and we have determined that these allegations are properly supported by adequate evidence and meet the statutory requirements for initiation.[22]

Initiation of Countervailing Duty Investigation

Section 702(b)(1) of the Act requires the Department to initiate a CVD investigation whenever an interested party files a CVD petition on behalf of an industry that: (1) Alleges the elements necessary for an imposition of a duty under section 701(a) of the Act; and (2) is accompanied by information reasonably available to the petitioner supporting the allegations. In the Petition, the petitioners allege that producers/exporters of GOES in the PRC benefited from countervailable subsidies bestowed by the government. The Department has examined the Petition and finds that it complies with the requirements of section 702(b)(1) of the Act. Therefore, in accordance with section 702(b)(1) of the Act, we are initiating a CVD investigation to determine whether manufacturers, producers, or exporters of GOES from the PRC receive countervailable subsidies from the government.

Based on our review of the Petition, we find that there is sufficient information to initiate a CVD investigation on certain alleged programs. For a full discussion of the basis for our decision to initiate or not initiate on each program, *see* PRC CVD Initiation Checklist.

A public version of the initiation checklist is available on IA ACCESS and at *http://enforcement.trade.gov/ia-highlights-and-news.html.*

Respondent Selection

For this investigation, the Department will release U.S. Customs and Border Protection (CBP) data for U.S. imports of subject merchandise during the period of investigation under the following Harmonized Tariff Schedule of the United States numbers: 7225.11.0000, 7226.11.1000, 7226.11.9030, and 7226.11.9060. We intend to release the CBP data under Administrative Protective Order (APO) to all parties with access to information protected by APO shortly after the announcement of this case initiation. Interested parties must submit applications for disclosure under APO in accordance with 19 CFR 351.305(b). Instructions for filing such applications may be found at *http://enforcement.trade.gov/apo/.*

Interested parties may submit comments regarding the CBP data and respondent selection by 5:00 p.m. EST on the seventh calendar day after publication of this notice. Comments must be filed in accordance with the filing requirements stated above. If respondent selection is necessary, we intend to base our decision regarding respondent selection upon comments received from interested parties and our analysis of the record information within 20 days of publication of this notice.

Distribution of Copies of the Petition

In accordance with section 702(b)(4)(A)(i) of the Act and 19 CFR 351.202(f), copies of the public version of the petitions have been provided to the GOC via IA ACCESS. To the extent practicable, we will attempt to provide a copy of the public version of the petition to each known exporter (as named in the petition), as provided in 19 CFR 351.203(c)(2).

ITC Notification

We have notified the ITC of our initiation, as required by section 702(d) of the Act.

Preliminary Determination by the ITC

The ITC will preliminarily determine, within 45 days after the date on which the Petition was filed, whether there is a reasonable indication that imports of GOES from the PRC are materially injuring, or threatening material injury to, a U.S. industry.[23] A negative ITC determination will result in the investigation being terminated with respect to that country; otherwise, this investigation will proceed according to statutory and regulatory time limits.

Submission of Factual Information

On April 10, 2013, the Department published *Definition of Factual Information and Time Limits for Submission of Factual Information: Final Rule,* 78 FR 21246 (April 10, 2013), which modified two regulations related to AD and CVD proceedings: The definition of factual information (19 CFR 351.102(b)(21)), and the time limits for the submission of factual information (19 CFR 351.301). The final rule identifies five categories of factual information in 19 CFR 351.102(b)(21), which are summarized as follows: (i) Evidence submitted in response to questionnaires; (ii) evidence submitted in support of allegations; (iii) publicly available information to value factors under 19 CFR 351.408(c) or to measure the adequacy of remuneration under 19 CFR 351.511(a)(2); (iv) evidence placed on the record by the Department; and (v) evidence other than factual information described in (i)–(iv). The final rule requires any party, when submitting factual information, to specify under which subsection of 19 CFR 351.102(b)(21) the information is being submitted and, if the information is submitted to rebut, clarify, or correct factual information already on the record, to provide an explanation identifying the information already on the record that the factual information seeks to rebut, clarify, or correct. The final rule also modified 19 CFR 351.301 so that, rather than providing general time limits, there are specific time limits based on the type of factual information being submitted. These modifications are effective for all segments initiated on or after May 10, 2013, and thus are applicable to this investigation. Please review the final rule, available at

[19] *Id.*

[20] *See* Volume I of the Petition, at 15–16 and Exhibit GENERAL–6.

[21] *See* Volume I of the Petition, at 13–30 and Exhibits GENERAL–4 and GENERAL–6 through GENERAL–12.

[22] *See* PRC CVD Initiation Checklist, at Attachment III, Analysis of Allegations and Evidence of Material Injury and Causation for the Petitions Covering Grain-Oriented Electrical Steel from the People's Republic of China, Czech Republic, Germany, Japan, the Republic of Korea, Poland, and the Russian Federation.

[23] *See* section 703(a) of the Act.

http://enforcement.trade.gov/frn/2013/1304frn/2013-08227.txt, prior to submitting factual information in this investigation.

Certification Requirements

Any party submitting factual information in an AD or CVD proceeding must certify to the accuracy and completeness of that information.[24] Parties are hereby reminded that the Department issued a final rule with respect to certification requirements, effective August 16, 2013. Parties are hereby reminded that revised certification requirements are in effect for company/government officials as well as their representatives. All segments of any AD or CVD proceedings initiated on or after August 16, 2013, should use the formats for the revised certifications provided at the end of the *Final Rule.*[25] The Department intends to reject factual submissions if the submitting party does not comply with the applicable revised certification requirements.

Extension of Time Limits

On September 20, 2013, the Department published *Extension of Time Limits, Final Rule,* 78 FR 57790 (September 20, 2013), which modified one regulation related to AD and CVD proceedings regarding the extension of time limits for submissions in such proceedings (19 CFR 351.302(c)). These modifications are effective for all segments initiated on or after October 21, 2013, and thus are applicable to this investigation. Please review the final rule, available at *http://www.gpo.gov/fdsys/pkg/FR-2013-09-20/html/2013-22853.htm* prior to requesting an extension.

Tolling Deadlines

As explained in the memorandum from the Assistant Secretary for Enforcement and Compliance, the Department has exercised its discretion to toll deadlines for the duration of the closure of the Federal Government from October 1, through October 16, 2013. *See* Memorandum for the Record from Paul Piquado, Assistant Secretary for Enforcement and Compliance, ''Deadlines Affected by the Shutdown of the Federal Government'' (October 18, 2013). Therefore, all deadlines in this segment of the proceeding have been extended by 16 days. If the new deadline falls on a non-business day, in accordance with the Department's practice, the deadline will become the next business day. Accordingly, the revised deadline for the initiation of this investigation is now October 24, 2013.

Notification to Interested Parties

Interested parties must submit applications for disclosure under APO in accordance with 19 CFR 351.305. On January 22, 2008, the Department published *Antidumping and Countervailing Duty Proceedings: Documents Submission Procedures; APO Procedures,* 73 FR 3634 (January 22, 2008). Parties wishing to participate in this investigation should ensure that they meet the requirements of these procedures (*e.g.,* the filing of letters of appearance as discussed at 19 CFR 351.103(d)).

This notice is issued and published pursuant to section 777(i) of the Act.

Dated: October 24, 2013.

Paul Piquado,

Assistant Secretary for Enforcement and Compliance.

Appendix I

Scope of the Investigation

The scope of this investigation covers grain-oriented silicon electrical steel (GOES). GOES is a flat-rolled alloy steel product containing by weight at least 0.6 percent but not more than 6 percent of silicon, not more than 0.08 percent of carbon, not more than 1.0 percent of aluminum, and no other element in an amount that would give the steel the characteristics of another alloy steel, in coils or in straight lengths. The GOES that is subject to this investigation is currently classifiable under subheadings 7225.11.0000, 7226.11.1000, 7226.11.9030, and 7226.11.9060 of the Harmonized Tariff Schedule of the United States (HTSUS). Although the HTSUS subheadings are provided for convenience and customs purposes, the written description of the scope of this investigation is dispositive.

[FR Doc. 2013–26002 Filed 10–30–13; 8:45 am]

BILLING CODE 3510–DS–P

[24] *See* section 782(b) of the Act.

[25] *See Certification of Factual Information To Import Administration During Antidumping and Countervailing Duty Proceedings,* 78 FR 42678 (July 17, 2013) (*Final Rule*); see also the frequently asked questions regarding the *Final Rule,* available at the following: *http://enforcement.trade.gov/tlei/notices/factual_info_final_rule_FAQ_07172013.pdf.*

DEPARTMENT OF COMMERCE

International Trade Administration

[A–533–857, A–580–870, A–565–802, A–517–804, A–583–850, A–549–832, A–489–816, A–823–815, A–552–817]

Certain Oil Country Tubular Goods From India, the Republic of Korea, the Republic of the Philippines, Saudi Arabia, Taiwan, Thailand, the Republic of Turkey, Ukraine, and the Socialist Republic of Vietnam: Postponement of Preliminary Determinations of Antidumping Duty Investigations

AGENCY: Enforcement and Compliance (formerly Import Administration), International Trade Administration, Department of Commerce.

DATES: October 31, 2013.

FOR FURTHER INFORMATION CONTACT: Emily Halle at (202) 482–0176 (India); Victoria Cho at (202) 482–5075 (Korea); Dmitry Vladimirov at (202) 482–0665 (the Philippines); Jason Rhoads at (202) 482–0123 (Saudi Arabia); Thomas Schauer at (202) 482–0410 (Taiwan); Yasmin Nair at (202) 482–3813 (Thailand); Catherine Cartsos at (202) 482–1757 (Turkey); David Lindgren at (202) 482–3870 (Ukraine); or Fred Baker at (202) 482–2924 (Vietnam), AD/CVD Operations, Enforcement and Compliance, International Trade Administration, U.S. Department of Commerce, 14th Street and Constitution Avenue NW., Washington, DC 20230.

SUPPLEMENTARY INFORMATION:

Postponement of Preliminary Determinations

On July 29, 2013, the Department of Commerce (the Department) published a notice of initiation of antidumping duty investigations of certain oil country tubular goods from India, the Republic of Korea, the Republic of the Philippines, Saudi Arabia, Taiwan, Thailand, the Republic of Turkey, Ukraine, and the Socialist Republic of Vietnam.[1] The notice of initiation stated that the Department, in accordance with section 733(b)(1)(A) of the Tariff Act of 1930, as amended (the Act), and 19 CFR 351.205(b)(1), would issue its preliminary determinations for these investigations, unless postponed, no later than 140 days after the date of the initiation. The preliminary determinations of these antidumping duty investigations are currently due no later than December 9, 2013. As

[1] *See Certain Oil Country Tubular Goods from India, the Republic of Korea, the Republic of the Philippines, Saudi Arabia, Taiwan, Thailand, the Republic of Turkey, Ukraine, and the Socialist Republic of Vietnam: Initiation of Antidumping Duty Investigations,* 78 FR 45505 (July 29, 2013).

explained in the memorandum from the Assistant Secretary for Enforcement and Compliance, the Department has exercised its discretion to toll deadlines for the duration of the closure of the Federal Government from October 1, through October 16, 2013.[2] Therefore, all deadlines in this segment of the proceeding have been extended by 16 days. If the new deadline falls on a non-business day, in accordance with the Department's practice, the deadline will become the next business day. The revised deadline for the preliminary determinations of these investigations is now December 26, 2013.

Because of the extraordinary complexity of these cases and the number of firms whose activities we must investigate, we determine that it is not practicable to complete the preliminary determinations by the current deadline. Therefore, in accordance with section 733(c)(1)(B) of the Act and 19 CFR 351.205(b), the Department is postponing the deadline for these preliminary determinations to no later than 190 days after the date on which it initiated these investigations. Therefore, the new deadline for issuing these preliminary determinations is February 13, 2014.

This notice is issued and published pursuant to section 733(c)(2) of the Act and 19 CFR 351.205(f)(1).

Dated: October 24, 2013.

Paul Piquado,

Assistant Secretary for Enforcement and Compliance.

[FR Doc. 2013–25824 Filed 10–30–13; 8:45 am]

BILLING CODE 3510–DS–P

[2] *See* Memorandum for the Record from Paul Piquado, Assistant Secretary for Enforcement and Compliance, ''Deadlines Affected by the Shutdown of the Federal Government'' (October 18, 2013).

DEPARTMENT OF COMMERCE

International Trade Administration

[C–570–993, C–560–827]

Monosodium Glutamate From the People's Republic of China and the Republic of Indonesia: Initiation of Countervailing Duty Investigations

AGENCY: Enforcement and Compliance, formerly Import Administration, International Trade Administration, Department of Commerce.

DATES: *Effective:* October 31, 2013.

FOR FURTHER INFORMATION CONTACT: Jun Jack Zhao (the People's Republic of China (the PRC)), or Gene Calvert (the Republic of Indonesia (Indonesia)) at (202) 482–1396, or (202) 482–3586, respectively, AD/CVD Operations, Office 6, Enforcement and Compliance, International Trade Administration, U.S. Department of Commerce, 14th Street and Constitution Avenue NW., Washington, DC 20230.

SUPPLEMENTARY INFORMATION:

The Petitions

On September 16, 2013, the Department of Commerce (the Department) received countervailing duty (CVD) petitions concerning imports of monosodium glutamate (MSG) from Indonesia and the PRC filed in proper form on behalf of Ajinomoto North America Inc. (Petitioner).[1] Petitioner is a domestic producer of MSG. On September 20, 2013, the Department requested additional information and clarification of certain areas of the Petitions.[2] Petitioner filed responses to these requests on September 24, 2013, and September 26, 2013.[3]

In accordance with section 702(b)(1) of the Tariff Act of 1930, as amended (the Act), Petitioner alleges that the Governments of Indonesia (the GOI) and the PRC (the GOC) are providing countervailable subsidies (within the meaning of sections 701 and 771(5) of the Act) to imports of MSG from Indonesia and the PRC, and that such imports are materially injuring, and threaten to further cause material injury to, the domestic industry producing MSG in the United States pursuant to section 701 of the Act. The Department finds that Petitioner filed the petitions on behalf of the domestic industry because Petitioner is an interested party as defined in section 771(9)(C) of the Act, and that Petitioner has demonstrated sufficient industry support with respect to the initiation of the investigations that Petitioner is requesting.[4]

Periods of Investigations

The periods of these investigations (POI) is January 1, 2012, through December 31, 2012.

[1] *See* Countervailing Duty Petitions on Monosodium Glutamate from the PRC and Indonesia, filed on September 16, 2013 (the Petitions).

[2] *See* Petitions for the Imposition of Antidumping Duties and Countervailing Duties on Imports of Monosodium Glutamate from the People's Republic of China and the Republic of Indonesia: Supplemental Questions, September 20, 2013.

[3] *See* Supplement to the PRC Petition, September 24, 2013 (September 24 Supplement to the PRC Petition); and Supplement to the Indonesia Petition, September 24, 2013 (September 24 Supplement to the Indonesia Petition).

[4] *See* ''Determination of Industry Support for the Petitions,'' below.

Scope of the Investigations

The product covered by these investigations is MSG from Indonesia and the PRC.[5]

Comments on the Scope of the Investigations

During our review of the petitions, we discussed the scope with Petitioner to ensure that it is an accurate reflection of the product for which the domestic industry is seeking relief. Moreover, as discussed in the preamble to the regulations,[6] we are setting aside a period for interested parties to raise issues regarding product coverage. The Department encourages all interested parties to submit such comments by November 12, 2013, 5:00 p.m. Eastern Time, which is 20 calendar days from the signature date of this notice. All comments and submissions to the Department must be filed electronically using Enforcement and Compliance's electronic service system (IA ACCESS).[7] An electronically filed document must be received successfully in its entirety by the Department's electronic records system, IA ACCESS, by the time and date noted above. Documents excepted from the electronic submission requirements must be filed manually (*i.e.,* in paper form) with Enforcement and Compliance's APO/Dockets Unit, Room 1870, U.S. Department of Commerce, 14th Street and Constitution Avenue NW., Washington, DC 20230, and stamped with the date and time of receipt by the deadline noted above. All comments must be filed on the records of both the Indonesia and PRC CVD investigations, as well as the concurrent Indonesia and PRC antidumping duty (AD) investigations.

The period for scope comments is intended to provide the Department with ample opportunity to consider all comments and to consult with parties prior to the issuance of the preliminary determinations.

Filing Requirements

All submissions to the Department must be filed electronically using IA ACCESS. An electronically filed

[5] *See* Appendix I of this notice for a full description of the scope of these investigations.

[6] *See Antidumping Duties; Countervailing Duties; Final Rule,* 62 FR 27296, 27323 (May 19, 1997).

[7] *See Antidumping and Countervailing Duty Proceedings: Electronic Filing Procedures; Administrative Protective Order Procedures,* 76 FR 39263 (July 6, 2011) for details of the Department's electronic filing requirements, which went into effect on August 5, 2011. Information on help using IA ACCESS can be found at *https://iaaccess.trade.gov/help.aspx* and a handbook can be found at *https://iaaccess.trade.gov/help/Handbook%20on%20Electronic%20Filling%20Procedures.pdf.*

document must be received successfully in its entirety by the applicable deadline. Documents excepted from the electronic submission requirements must be filed manually (*i.e.,* in paper form) with Enforcement and Compliance's APO/Dockets Unit, Room 1870, U.S. Department of Commerce, 14th Street and Constitution Avenue NW., Washington, DC 20230, and stamped with the date and time of receipt by the deadline.

Tolling of Deadlines

As explained in the memorandum from the Assistant Secretary for Enforcement and Compliance, the Department has exercised its discretion to toll deadlines for the duration of the closure of the Federal Government from October 1, through October 16, 2013.[8] Therefore, all deadlines in these investigations have been tolled by 16 days. The revised deadline for the initiation of these investigations is October 23, 2013.

Consultations

Pursuant to section 702(b)(4)(A)(ii) of the Act, the Department invited representatives from the GOC and the GOI for consultations with respect to the Petitions.[9] Consultations were held with the GOC on September 27, 2013. The Department and the GOI were unable to schedule consultations regarding the Indonesia petition.[10]

Determination of Industry Support for the Petitions

Section 702(b)(1) of the Act requires that a petition be filed on behalf of the domestic industry. Section 702(c)(4)(A) of the Act provides that a petition meets this requirement if the domestic producers or workers who support the petition account for: (i) At least 25 percent of the total production of the domestic like product; and (ii) more than 50 percent of the production of the domestic like product produced by that portion of the industry expressing support for, or opposition to, the petition. Moreover, section 702(c)(4)(D) of the Act provides that, if the petition does not establish support of domestic producers or workers accounting for more than 50 percent of the total production of the domestic like product, the Department shall: (i) Poll the industry or rely on other information in order to determine if there is support for the petition, as required by subparagraph (A); or (ii) determine industry support using a statistically valid sampling method to poll the ''industry.''

Section 771(4)(A) of the Act defines the ''industry'' as the producers as a whole of a domestic like product. Thus, to determine whether a petition has the requisite industry support, the statute directs the Department to look to producers and workers who produce the domestic like product. The International Trade Commission (ITC), which is responsible for determining whether ''the domestic industry'' has been injured, must also determine what constitutes a domestic like product in order to define the industry. While both the Department and the ITC must apply the same statutory definition regarding the domestic like product (*see* section 771(10) of the Act), they do so for different purposes and pursuant to a separate and distinct authority. In addition, the Department's determination is subject to limitations of time and information. Although this may result in different definitions of the like product, such differences do not render the decision of either agency contrary to law.[11]

Section 771(10) of the Act defines the domestic like product as ''a product which is like, or in the absence of like, most similar in characteristics and uses with, the article subject to an investigation under this title.'' Thus, the reference point from which the domestic like product analysis begins is ''the article subject to an investigation'' (*i.e.,* the class or kind of merchandise to be investigated, which normally will be the scope as defined in the Petitions).

With regard to the domestic like product, Petitioner does not offer a definition of the domestic like product distinct from the scope of the investigations. Based on our analysis of the information submitted on the record, we have determined that MSG constitutes a single domestic like product and we have analyzed industry support in terms of that domestic like product.[12]

In determining whether Petitioner has standing under section 702(c)(4)(A) of the Act, we considered the industry support data contained in the Petitions with reference to the domestic like product as defined in the ''Scope of the Investigations,'' in Appendix I of this notice. To establish industry support, Petitioner provided its own production of the domestic like product in 2012.[13] Petitioner states that there are no other known producers of MSG in the United States; therefore, the Petitions are supported by 100 percent of the U.S. industry.[14]

Our review of the data provided in the Petitions and other information readily available to the Department indicates that Petitioner has established industry support.[15] First, the Petitions established support from domestic producers (or workers) accounting for more than 50 percent of the total production of the domestic like product and, as such, the Department is not required to take further action in order to evaluate industry support (*e.g.,* polling).[16] Second, the domestic producers (or workers) have met the statutory criteria for industry support under section 702(c)(4)(A)(i) of the Act because the domestic producers (or workers) who support the Petitions account for at least 25 percent of the total production of the domestic like product.[17] Finally, the domestic producers (or workers) have met the statutory criteria for industry support under section 702(c)(4)(A)(ii) of the Act because the domestic producers (or workers) who support the Petitions account for more than 50 percent of the production of the domestic like product produced by that portion of the industry

[8] *See* Memorandum for the Record from Paul Piquado, Assistant Secretary for Enforcement and Compliance, ''Deadlines Affected by the Shutdown of the Federal Government,'' (October 18, 2013).

[9] *See* Letter of Invitation Regarding the Countervailing Duty Petition on Monosodium Glutamate from the People's Republic of China (September 18, 2013); *see also* Letter of Invitation Regarding the Countervailing Duty Petition on Monosodium Glutamate from the Republic of Indonesia (September 18, 2013).

[10] *See* Ex-Parte Memoranda for the File from Mark Hoadley, ''Consultations with Officials from the Government of the People's Republic of China regarding the Countervailing Duty Petition concerning Monosodium Glutamate,'' (October 21, 2013); *see also* Memorandum to the File from Gene Calvert, ''Consultations with the Government of Indonesia,'' (October 23, 2013).

[11] *See USEC, Inc.* v. *United States,* 132 F. Supp. 2d 1, 8 (CIT 2001) (citing *Algoma Steel Corp., Ltd.* v. *United States,* 688 F. Supp. 639, 644 (CIT 1988), *aff'd* 865 F.2d 240 (Fed. Cir. 1989)).

[12] For a discussion of the domestic like product analysis in this case, *see* Countervailing Duty Investigation Initiation Checklist: Monosodium Glutamate from Indonesia (Indonesia CVD Checklist) at Attachment II, Analysis of Industry Support for the Petitions Covering Monosodium Glutamate from Indonesia and the People's Republic of China (Attachment II); and Countervailing Duty Investigation Initiation Checklist: Monosodium Glutamate from the People's Republic of China (PRC CVD Checklist), at Attachment II. These checklists are dated concurrently with this notice and on file electronically via IA ACCESS. Access to documents filed via IA ACCESS is also available in the Central Records Unit, Room 7046 of the main Department of Commerce building.

[13] *See* Volume I of the Petitions, at Exhibit I–1.B.

[14] *Id.,* at 3 and Exhibits I–1.A and I–1.B.

[15] *See* Indonesia CVD Checklist and PRC CVD Checklist, at Attachment II.

[16] *See* section 702(c)(4)(D) of the Act; *see also* Indonesia CVD Checklist and PRC CVD Checklist, at Attachment II.

[17] *See* Indonesia CVD Checklist and PRC CVD Checklist, at Attachment II.

expressing support for, or opposition to, the Petitions.[18] Accordingly, the Department determines that the Petitions were filed on behalf of the domestic industry within the meaning of section 702(b)(1) of the Act.

The Department finds that Petitioner filed the Petitions on behalf of the domestic industry because it is an interested party as defined in section 771(9)(C) of the Act and it has demonstrated sufficient industry support with respect to the CVD investigations that it is requesting the Department initiate.[19]

Injury Test

Because Indonesia and China are ''Subsidies Agreement Countries'' within the meaning of section 701(b) of the Act, section 701(a)(2) of the Act applies to these investigations. Accordingly, the ITC must determine whether imports of the subject merchandise from Indonesia and the PRC materially injure, or threaten material injury to, a U.S. industry.

Allegations and Evidence of Material Injury and Causation

Petitioner alleges that imports of the subject merchandise are benefitting from countervailable subsidies and that such imports are causing, or threaten to cause, material injury to the U.S. industry producing the domestic like product. Petitioner alleges that subject imports exceed the negligibility threshold provided for under section 771(24)(A) of the Act. Petitioner also demonstrates that the volume of subject imports from Indonesia is 15 percent, which exceeds the negligibility threshold provided for under section 771(24)(B) of the Act, which states that in countervailing duty proceedings, imports of subject merchandise from developing countries must exceed the negligibility threshold of four percent.[20]

Petitioner contends that the industry's injured condition is illustrated by reduced market share; underselling and price depression or suppression; lost sales and revenues; and decline in financial performance.[21] We have assessed the allegations and supporting evidence regarding material injury, threat of material injury, and causation, and we have determined that these allegations are properly supported by adequate evidence and meet the statutory requirements for initiation.[22]

Initiation of CVD Investigations

Section 702(b)(1) of the Act requires the Department to initiate a CVD investigation whenever an interested party files a CVD petition on behalf of an industry that: (1) Alleges the elements necessary for an imposition of a duty under section 701(a) of the Act; and (2) is accompanied by information reasonably available to the petitioner supporting the allegations. In the Petitions, Petitioner alleges that producers of MSG in Indonesia and the PRC benefitted from countervailable subsidies bestowed by their respective governments. The Department has examined the Petitions, and finds that they comply with the requirements of section 702(b)(1) of the Act. Therefore, in accordance with section 702(b)(1) of the Act, we are initiating CVD investigations to determine whether manufacturers, producers, or exporters of MSG from Indonesia and the PRC receive countervailable subsidies from their respective governments.

Indonesia

Based on our examination of the Petitions, we find that there is sufficient information to initiate a CVD investigation of 10 alleged programs. For a full discussion of the basis for our decision on whether to initiate an investigation on each program, *see* the Indonesia CVD Initiation Checklist.

The PRC

Based on our examination of the Petitions, we find that there is sufficient information to initiate a CVD investigation of 49 alleged programs. For a full discussion of the basis for our decision on whether to initiate an investigation on each program, *see* the PRC CVD Initiation Checklist.

Respondent Selection

For these investigations, the Department, if necessary, intends to select respondents based on U.S. Customs and Border Protection (CBP) data for U.S. imports during the POI (*i.e.,* January 1, 2012, through December 31, 2012) under the following Harmonized Tariff Schedule of the United States numbers: 2922.42.10.00, 2922.42.50.00, 2103.90.72.00, 2103.90.74.00, 2103.90.78.00, 2103.90.80.00, and 2103.90.90.91. We intend to release the CBP data under Administrative Protective Order (APO) to all parties with access to information protected by APO within five days of the announcement of the initiation of these investigations. Interested parties may submit comments regarding the CBP data and respondent selection within five calendar days of release of this data. Comments on respondent selection must be filed electronically using IA ACCESS in accordance with the filing requirements, referenced above. We intend to make our decision regarding respondent selection within 20 days of the publication of this notice.

Distribution of Copies of the Petitions

In accordance with section 702(b)(4)(A)(i) of the Act, and 19 CFR 351.202(f), copies of the public version of the Petitions have been provided to the GOI and GOC via IA ACCESS. Because of the particularly large number of producers/exporters identified in the Petitions, the Department considers the service of the public versions of the Petitions to the foreign producers/exporters to be satisfied by the provision of the public versions of the Petitions to the GOI and GOC, consistent with 19 CFR 351.203(c)(2).

ITC Notification

We have notified the ITC of our initiation, as required by section 702(d) of the Act.

Preliminary Determinations by the ITC

The ITC will preliminarily determine, within 45 days after the date on which the Petitions were filed, whether there is a reasonable indication that imports of MSG from Indonesia and the PRC are materially injuring, or threatening material injury to, a U.S. industry.[23] A negative ITC determination for any country will result in the investigation being terminated with respect to that country; otherwise, these investigations will proceed according to statutory and regulatory time limits.

Submission of Factual Information

On April 10, 2013, the Department published *Definition of Factual Information and Time Limits for Submission of Factual Information: Final Rule,* 78 FR 21246 (April 10, 2013), which modified two regulations related to AD and CVD proceedings: (1) The definition of factual information (19 CFR 351.102(b)(21)), and (2) the time limits for the submission of factual information (19 CFR 351.301). The final rule identifies five categories of factual information in 19 CFR 351.102(b)(21),

[18] *Id.*

[19] *Id.*

[20] *See* Volume I of the Petitions, at 22.

[21] *Id.,* at 13–40 and Exhibits I–1, I–8, I–10 and I–12 through I–32; *see also* AD/CVD Supplement, at 2 and Exhibit SQR–1.

[22] *See* China CVD Initiation Checklist and Indonesia CVD Initiation Checklist, at Attachment III, Analysis of Allegations and Evidence of Material Injury and Causation for the Petitions Covering Monosodium Glutamate from Indonesia and the People's Republic of China.

[23] *See* section 703(a) of the Act.

which are summarized as follows: (i) Evidence submitted in response to questionnaires; (ii) evidence submitted in support of allegations; (iii) publicly available information to value factors under 19 CFR 351.408(c) or to measure the adequacy of remuneration under 19 CFR 351.511(a)(2); (iv) evidence placed on the record by the Department; and (v) evidence other than factual information described in (i)–(iv). The final rule requires any party, when submitting factual information, to specify under which subsection of 19 CFR 351.102(b)(21) the information is being submitted and, if the information is submitted to rebut, clarify, or correct factual information already on the record, to provide an explanation identifying the information already on the record that the factual information seeks to rebut, clarify, or correct. The final rule also modified 19 CFR 351.301 so that, rather than providing general time limits, there are specific time limits based on the type of factual information being submitted. These modifications are effective for all proceeding segments initiated on or after May 10, 2013, and thus are applicable to these investigations. Please review the final rule, available at *http://enforcement.trade.gov/frn/2013/1304frn/2013-08227.txt,* prior to submitting factual information for these investigations.

Extension of Time Limits

On September 20, 2013, the Department published *Extension of Time Limits, Final Rule,* 78 FR 57790 (September 20, 2013), which modified one regulation related to AD and CVD proceedings regarding the extension of time limits for submissions in such proceedings (19 CFR 351.302(c)). These modifications are effective for all proceeding segments initiated on or after October 21, 2013, and thus are applicable to this investigation. Please review the final rule, available at *http://www.gpo.gov/fdsys/pkg/FR-2013-09-20/html/2013-22853.htm* prior to requesting an extension.

Certification Requirements

Any party submitting factual information in an AD or CVD proceeding must certify to the accuracy and completeness of that information.[24] Parties are hereby reminded that revised certification requirements are in effect for company/government officials as well as their representatives in all AD or CVD investigations or proceedings initiated on or after August 16, 2013, including these investigations.[25] The formats for the revised certifications are provided at the end of the *Final Rule.* The Department intends to reject factual submissions if the submitting party does not comply with the revised certification requirements.

Notification to Interested Parties

Interested parties must submit applications for disclosure under APO in accordance with 19 CFR 351.305. On January 22, 2008, the Department published *Antidumping and Countervailing Duty Proceedings: Documents Submission Procedures; APO Procedures,* 73 FR 3634 (January 22, 2008). Parties wishing to participate in these investigations should ensure that they meet the requirements of these procedures (*e.g.,* the filing of letters of appearance as discussed at 19 CFR 351.103(d)).

This notice is issued and published pursuant to section 777(i) of the Act.

Dated: October 23, 2013.

Paul Piquado,

Assistant Secretary for Enforcement and Compliance.

Attachment I

Scope of the Investigations

The scope of these investigations covers monosodium glutamate (''MSG''), whether or not blended or in solution with other products. Specifically, MSG that has been blended or is in solution with other product(s) is included in this scope when the resulting mix contains 15% or more of MSG by dry weight. Products with which MSG may be blended include, but are not limited to, salts, sugars, starches, maltodextrins, and various seasonings. Further, MSG is included in these investigations regardless of physical form (including, but not limited to, substrates, solutions, dry powders of any particle size, or unfinished forms such as MSG slurry), end-use application, or packaging.

MSG has a molecular formula of $C_5H_8NO_4Na$, a Chemical Abstract Service (''CAS'') registry number of 6106–04–3, and a Unique Ingredient Identifier (''UNII'') number of W81N5U6R6U.

Merchandise covered by the scope of these investigations is currently classified in the Harmonized Tariff Schedule (''HTS'') of the United States at subheading 2922.42.10.00. Merchandise subject to the investigations may also enter under HTS subheadings 2922.42.50.00, 2103.90.72.00, 2103.90.74.00, 2103.90.78.00, 2103.90.80.00, and 2103.90.90.91. The tariff classifications, CAS registry number, and UNII number are provided for convenience and customs purposes; however, the written description of the scope is dispositive.

[FR Doc. 2013–25823 Filed 10–30–13; 8:45 am]

BILLING CODE 3510–DS–P

[24] *See* section 782(b) of the Act.

[25] *See Certifications of Factual Information To Import Administration During Antidumping and Countervailing Duty Proceedings,* 78 FR 42678 (July 17, 2013) (Final Rule).

DEPARTMENT OF COMMERCE

International Trade Administration

[A–549–502]

Circular Welded Carbon Steel Pipes and Tubes From Thailand: Final Results of Antidumping Duty Administrative Review; 2011–2012

AGENCY: Enforcement and Compliance, formerly Import Administration, International Trade Administration, Department of Commerce.

SUMMARY: On April 9, 2013, the Department of Commerce (the Department) published the preliminary results of the administrative review of the antidumping duty order on circular welded carbon steel pipes and tubes from Thailand. This review covers two producers and/or exporters of the subject merchandise, Saha Thai Steel Pipe (Public) Company, Ltd. (Saha Thai), and Pacific Pipe Company Limited (Pacific Pipe). The period of review (POR) is March 1, 2011, through February 29, 2012. The Department received comments from interested parties. For the final results we continue to find that Saha Thai has not sold subject merchandise at less than normal value (NV), and that Pacific Pipe had no shipments of subject merchandise during the POR.

DATES: *Effective Date:* October 31, 2013.

FOR FURTHER INFORMATION CONTACT: Jun Jack Zhao or Mark Hoadley, AD/CVD Operations, Office 6, Enforcement and Compliance, International Trade Administration, U.S. Department of Commerce, 14th Street and Constitution Avenue NW., Washington, DC 20230; telephone: (202) 482–1396 or (202) 482–3148, respectively.

SUPPLEMENTARY INFORMATION:

Background

On April 9, 2013, the Department published the preliminary results of the administrative review of the antidumping duty order on circular welded carbon steel pipes and tubes from Thailand.[1] We invited interested parties to comment on the *Preliminary Results.* Saha Thai, Wheatland Tube Company, and United States Steel

[1] *See Circular Welded Carbon Steel Pipes and Tubes from Thailand: Preliminary Results of Antidumping Duty Administrative Review; 2011–2012,* 78 FR 21105 (April 9, 2013) (*Preliminary Results*).

Corporation each submitted case brief on May 9, 2013, and submitted rebuttal briefs on May 21, 2013,[2] with respect to the *Preliminary Results.*

As explained in the memorandum from the Assistant Secretary for Enforcement and Compliance, the Department has exercised its discretion to toll deadlines for the duration of the closure of the Federal Government from October 1, through October 16, 2013.[3] Therefore, all deadlines in this segment of the proceeding have been extended by 16 days. The revised deadline for the final results of this review is now October 23, 2013.

The Department has conducted this administrative review in accordance with section 751(a) of the Tariff Act of 1930, as amended (the Act).

Scope of the Order

The products covered by the antidumping order are certain circular welded carbon steel pipes and tubes from Thailand.[4] The merchandise is classifiable under the Harmonized Tariff Schedule of the United States (HTSUS) item numbers 7306.30.1000, 7306.30.5025, 7306.30.5032, 7306.30.5040, 7306.30.5055, 7306.30.5085 and 7306.30.5090. Although the HTSUS subheadings are provided for convenience and purposes of U.S. Customs and Border Protection (CBP), the written description of the merchandise subject to the order is dispositive. A full description of the scope of the order is contained in the Issues and Decision Memorandum, which is hereby adopted by this notice.

Final Determination of No Shipments

For the final results of this review, we continue to find that Pacific Pipe had no shipments during the POR.[5]

Analysis of Comments Received

All issues raised in the case and rebuttal briefs by parties to this review are addressed in the Issues and Decision Memorandum. A list of issues that parties raised and to which we respond in the Issues and Decision Memorandum is attached to this notice as an Appendix. The Issues and Decision Memorandum is a public document and is on file electronically via Enforcement and Compliance's Antidumping and Countervailing Duty Centralized Electronic Service System (IA ACCESS). IA ACCESS is available to registered users at *http://iaaccess.trade.gov,* and is available to all parties in the Central Records Unit, room 7046 of the main Department of Commerce building. In addition, a complete version of the Issues and Decision Memorandum can be accessed directly on the Internet at *http://trade.gov/enforcement/.* The signed Issues and Decision Memorandum and the electronic versions of the Issues and Decision Memorandum are identical in content.

Changes Since the Preliminary Results

Based on a review of the record as well as comments received from parties regarding the *Preliminary Results,* we made two revisions to Saha Thai's margin calculation for the final results. We revised the differential pricing analysis to define purchaser based on Saha Thai's reported consolidated customer code in the U.S. market, and we revised Saha Thai's general and administrative expenses.[6]

Final Results of Review

As a result of our review, we determine the following weighted-average dumping margins exist for the period March 1, 2011, through February 29, 2012.

Producer/exporter	Weighted-average dumping margin (percent)
Saha Thai Steel Pipe (Public) Company, Ltd.	0.00
Pacific Pipe Company Limited	*

* No shipments or sales subject to this review. The firm has an individual rate from the last segment of the proceeding in which the firm had shipments or sales.

Assessment Rates

In accordance with 19 CFR 351.106(c)(2) and the *Final Modification for Reviews,*[7] the Department will instruct U.S. Customs and Border Protection (CBP) to liquidate appropriate entries for Saha Thai without regard to antidumping duties.

The Department clarified its ''automatic assessment'' regulation on May 6, 2003.[8] This clarification applies to entries of subject merchandise during the POR produced by Saha Thai for which it did not know its merchandise was destined for the United States. In such instances, we will instruct CBP to liquidate unreviewed entries at the all-others rate if there is no rate for the intermediate company(ies) involved in the transaction.

Consistent with the *Assessment Policy Notice,* because we continue to find that Pacific Pipe had no shipments of subject merchandise to the United States, we will instruct CBP to liquidate all applicable entries of merchandise produced by Pacific Pipe and exported by other parties at the rate for the intermediate reseller, if available, or at the all-others rate.

We intend to issue instructions to CBP 15 days after publication of the final results of this review.

Cash Deposit Requirements

The following deposit requirements will be effective upon publication of the notice of final results of administrative review for all shipments of circular welded carbon steel pipes and tubes from Thailand entered, or withdrawn from warehouse, for consumption on or after the date of publication as provided by section 751(a)(2) of the Act: (1) The cash deposit rate for Saha Thai will be 0.00 percent, the weighted-average dumping margin established in the final results of this administrative review; (2) for Pacific Pipe and previously reviewed or investigated companies not listed above, the cash deposit rate will continue to be the company-specific rate published for the most recently completed segment of this proceeding; (3) if the exporter is not a firm covered in this review, a prior review, or the less than fair value (LTFV) investigation, but the manufacturer is, then the cash deposit rate will be the rate established for the most recently completed segment of this proceeding for the manufacturer of the merchandise; and (4) if neither the exporter nor the manufacturer is a firm covered in this or any previous review or the LTFV investigation, then

[2] Wheatland Tube Company resubmitted its rebuttal brief on July 10, 2013, with certain bracketing of information removed pursuant to the instructions of the Department.

[3] *See* Memorandum for the Record from Paul Piquado, Assistant Secretary for Enforcement and Compliance, ''Deadlines Affected by the Shutdown of the Federal Government'' (October 18, 2013).

[4] *See* Memorandum to Paul Piquado, Assistant Secretary for Enforcement and Compliance, from Christian Marsh, Deputy Assistant Secretary for Antidumping and Countervailing Duty Operations, entitled ''Issues and Decision Memorandum for the Final Results of Antidumping Duty Administrative Review of Circular Welded Carbon Steel Pipes and Tubes from Thailand: 2011–2012 Administrative Review,'' dated concurrently with this notice (Issues and Decision Memorandum), for a complete description of the scope of the order.

[5] *See Preliminary Results,* 78 FR at 21105.

[6] *See* Saha Thai's Final Analysis Memorandum and Memorandum to the File, entitled ''Final Results of the Administrative Review of Circular Welded Carbon Steel Pipes and Tubes from Thailand: Analysis Memorandum for Saha Thai Steel Pipe (Public) Company, Ltd.,'' dated concurrently with this notice.

[7] *See Antidumping Proceedings: Calculation of the Weighted-Average Dumping Margin and Assessment Rate in Certain Antidumping Proceedings: Final Modification,* 77 FR 8101, 8102 (February 14, 2012) (*Final Modification for Reviews*).

[8] For a full discussion of this clarification, *see Antidumping and Countervailing Duty Proceedings: Assessment of Antidumping Duties,* 68 FR 23954 (May 6, 2003) (*Assessment Policy Notice*).

the cash deposit rate will be the ''all-others'' rate of 15.67 percent established in the LTFV investigation.[9] These deposit rates, when imposed, shall remain in effect until further notice.

Notifications

This notice serves as a final reminder to importers of their responsibility under 19 CFR 351.402(f)(2) to file a certificate regarding the reimbursement of antidumping duties prior to liquidation of the relevant entries during this review period. Failure to comply with this requirement could result in the Secretary's presumption that reimbursement of antidumping duties occurred and the subsequent assessment of double antidumping duties.

This notice also serves as a reminder to parties subject to administrative protective order (APO) of their responsibility concerning the destruction of proprietary information disclosed under APO in accordance with 19 CFR 351.305(a)(3). Timely written notification of the return or destruction of APO materials or conversion to judicial protective order is hereby requested. Failure to comply with the regulations and terms of an APO is a sanctionable violation.

The Department is issuing and publishing these final results of administrative review in accordance with sections 751(a)(1) and 777(i)(1) of the Act.

Dated: October 23, 2013.

Paul Piquado,

Assistant Secretary for Enforcement and Compliance.

Appendix

List of Topics Discussed in the Issues and Decision Memorandum

Comment 1: Issues with the Differential Pricing Analysis
Comment 2: Withdrawal of the Targeted Dumping Regulation
Comment 3: Use of an Alternative Comparison Method in Administrative Reviews
Comment 4: Denial of Offsets with the Average-to-Transaction Comparison Method
Comment 5: Freight Revenue Cap
Comment 6: Date of Sale for Saha Thai's U.S. Sales
Comment 7: Saha Thai's Grade Distinctions
Comment 8: ''Schedule'' as a Model Matching Characteristic
Comment 9: Warehouse Costs Incurred on Painted Products
Comment 10: Treatment of Non-Prime Products in Calculating the Cost of Production
Comment 11: Steel Scrap Offset
Comment 12: General and Administrative Expense Ratio (Warehouse Rental Income and Expense)
Comment 13: Zinc Scrap Offset

[FR Doc. 2013–25808 Filed 10–30–13; 8:45 am]

BILLING CODE 3510–DS–P

[9] *See Antidumping Duty Order: Circular Welded Carbon Steel Pipes and Tubes from Thailand,* 51 FR 8341 (March 11, 1986).

DEPARTMENT OF COMMERCE

International Trade Administration

[A–570–901]

Certain Lined Paper Products From the People's Republic of China: Notice of Final Results and Partial Rescission of Antidumping Duty Administrative Review; 2011–2012

AGENCY: Enforcement and Compliance, formerly Import Administration, International Trade Administration, Department of Commerce.

SUMMARY: On June 10, 2013, the Department of Commerce (the Department) published in the **Federal Register** its preliminary results of the sixth administrative review of the antidumping duty order [1] on certain lined paper products from the People's Republic of China (PRC).[2] The period of review (POR) is September 1, 2011, through August 31, 2012. We invited parties to comment on the *Preliminary Results,* however, no party submitted any comments. The current review covers three exporters: Leo's Quality Products Co., Ltd./Denmax Plastic Stationery Factory (Leo/Denmax), Shanghai Lian Li Paper Products Co., Ltd. (Lian Li), and Hwa Fuh Plastics Co., Ltd./Li Teng Plastics (Shenzhen) Co., Ltd. (Hwa Fuh/Li Teng). For these final results, we made no changes to our preliminary results. We are rescinding the review with respect to Hwa Fuh/Li Teng. We continue to find Leo/Denmax to be part of the PRC-wide entity. In addition, we continue to find that Lian Li made no shipments to the United States during the POR and will retain its separate rate status.

DATES: *Effective Date:* October 31, 2013.

FOR FURTHER INFORMATION CONTACT: Cindy Robinson, AD/CVD Operations, Office III, Enforcement and Compliance, International Trade Administration, Department of Commerce, 14th Street and Constitution Avenue NW., Washington, DC 20230; telephone: (202) 482–3797.

SUPPLEMENTARY INFORMATION:

Background

On June 10, 2013, the Department published the *Preliminary Results.* We invited interested parties to comment on the *Preliminary Results,* but we received no comments. The Department has conducted this administrative review in accordance with section 751(a) of the Tariff Act of 1930, as amended (the Act).

In the *Preliminary Results,* the Department found that Lian Li made no shipments to the United States during the POR and preliminary determined not to rescind the review with respect to Lian Li, but to issue appropriate instructions to U.S. Customs and Border Protection (CBP) based on the final results of the review.[3] In addition, the Department preliminarily rescinded this review with respect to Hwa Fuh/Li Teng because the questionnaire sent to this company was returned to the Department because of an undeliverable address. Hwa Fuh/Li Teng has no valid address and could not be contacted. In addition, because Leo/Denmax did not respond to the Department's questionnaire nor did it submit a proper no shipments notification to the Department, we preliminarily determined that Leo/Denmax failed to demonstrate that it operates free from government control. Thus, we preliminarily determined Leo/Denmax to be part of the PRC-wide entity.[4] We invited interested parties to submit comments on our *Preliminary Results,* but we received no comments. Therefore, for these final results, we continue to find Leo/Denmax to be part of the PRC-wide entity.

As explained in the memorandum from the Assistant Secretary for Enforcement and Compliance, the Department has exercised its discretion to toll deadlines for the duration of the closure of the Federal Government from October 1, through October 16, 2013.[5] Therefore, all deadlines in this segment of the proceeding have been extended by 16 days. If the new deadline falls on a non-business day, in accordance with the Department's practice, the deadline will become the next business day. The

[1] *See Notice of Amended Final Determination of Sales at Less Than Fair Value: Certain Lined Paper Products from the People's Republic of China; Notice of Antidumping Duty Orders: Certain Lined Paper Products from India, Indonesia, and the People's Republic of China; and Notice of Countervailing Duty Orders: Certain Lined Paper Products from India and Indonesia,* 71 FR 56949 (September 28, 2006).

[2] *See Certain Lined Paper Products from the People's Republic of China: Preliminary Results and Rescission in Part of Antidumping Duty Administrative Review; 2011–2012,* 78 FR 34640 (June 10, 2013) (*Preliminary Results*).

[3] *Id.*

[4] *Id.*

[5] *See* Memorandum for the Record from Paul Piquado, Assistant Secretary for Enforcement and Compliance, ''Deadlines Affected by the Shutdown of the Federal Government'' (October 18, 2013).

revised deadline for the final results of this review is now October 24, 2013.

Scope of the Order

The scope of this order includes certain lined paper products, typically school supplies (for purposes of this scope definition, the actual use of or labeling these products as school supplies or non-school supplies is not a defining characteristic) composed of or including paper that incorporates straight horizontal and/or vertical lines on ten or more paper sheets (there shall be no minimum page requirement for looseleaf filler paper) including but not limited to such products as single- and multi-subject notebooks, composition books, wireless notebooks, looseleaf or glued filler paper, graph paper, and laboratory notebooks, and with the smaller dimension of the paper measuring 6 inches to 15 inches (inclusive) and the larger dimension of the paper measuring 8¾ inches to 15 inches (inclusive). Page dimensions are measured size (not advertised, stated, or ''tear-out'' size), and are measured as they appear in the product (*i.e.,* stitched and folded pages in a notebook are measured by the size of the page as it appears in the notebook page, not the size of the unfolded paper). However, for measurement purposes, pages with tapered or rounded edges shall be measured at their longest and widest points. Subject lined paper products may be loose, packaged or bound using any binding method (other than case bound through the inclusion of binders board, a spine strip, and cover wrap). Subject merchandise may or may not contain any combination of a front cover, a rear cover, and/or backing of any composition, regardless of the inclusion of images or graphics on the cover, backing, or paper. Subject merchandise is within the scope of this order whether or not the lined paper and/or cover are hole punched, drilled, perforated, and/or reinforced. Subject merchandise may contain accessory or informational items including but not limited to pockets, tabs, dividers, closure devices, index cards, stencils, protractors, writing implements, reference materials such as mathematical tables, or printed items such as sticker sheets or miniature calendars, if such items are physically incorporated, included with, or attached to the product, cover and/or backing thereto.

Specifically excluded from the scope of this order are:

- Unlined copy machine paper;
- Writing pads with a backing (including but not limited to products commonly known as ''tablets,'' ''note pads,'' ''legal pads,'' and ''quadrille pads''), provided that they do not have a front cover (whether permanent or removable). This exclusion does not apply to such writing pads if they consist of hole-punched or drilled filler paper;
- Three-ring or multiple-ring binders, or notebook organizers incorporating such a ring binder provided that they do not include subject paper;
- Index cards;
- Printed books and other books that are case bound through the inclusion of binders board, a spine strip, and cover wrap;
- Newspapers;
- Pictures and photographs;
- Desk and wall calendars and organizers (including but not limited to such products generally known as ''office planners,'' ''time books,'' and ''appointment books'');
- Telephone logs;
- Address books;
- Columnar pads & tablets, with or without covers, primarily suited for the recording of written numerical business data;
- Lined business or office forms, including but not limited to: Pre-printed business forms, lined invoice pads and paper, mailing and address labels, manifests, and shipping log books;
- Lined continuous computer paper;
- Boxed or packaged writing stationary (including but not limited to products commonly known as ''fine business paper,'' ''parchment paper,'' and ''letterhead''), whether or not containing a lined header or decorative lines;
- Stenographic pads (''steno pads''), Gregg ruled (''Gregg ruling'' consists of a single- or double-margin vertical ruling line down the center of the page. For a six-inch by nine-inch stenographic pad, the ruling would be located approximately three inches from the left of the book.), measuring 6 inches by 9 inches.

Also excluded from the scope of this order are the following trademarked products:

- Fly™ lined paper products: A notebook, notebook organizer, loose or glued note paper, with papers that are printed with infrared reflective inks and readable only by a Fly™ pen-top computer. The product must bear the valid trademark Fly™ (products found to be bearing an invalidly licensed or used trademark are not excluded from the scope).
- Zwipes™: A notebook or notebook organizer made with a blended polyolefin writing surface as the cover and pocket surfaces of the notebook, suitable for writing using a specially-developed permanent marker and erase system (known as a Zwipes™ pen). This system allows the marker portion to mark the writing surface with a permanent ink. The eraser portion of the marker dispenses a solvent capable of solubilizing the permanent ink allowing the ink to be removed. The product must bear the valid trademark Zwipes™ (products found to be bearing an invalidly licensed or used trademark are not excluded from the scope).
- FiveStar®Advance™: A notebook or notebook organizer bound by a continuous spiral, or helical, wire and with plastic front and rear covers made of a blended polyolefin plastic material joined by 300 denier polyester, coated on the backside with PVC (poly vinyl chloride) coating, and extending the entire length of the spiral or helical wire. The polyolefin plastic covers are of specific thickness; front cover is 0.019 inches (within normal manufacturing tolerances) and rear cover is 0.028 inches (within normal manufacturing tolerances). Integral with the stitching that attaches the polyester spine covering, is captured both ends of a 1″ wide elastic fabric band. This band is located 2⅜″ from the top of the front plastic cover and provides pen or pencil storage. Both ends of the spiral wire are cut and then bent backwards to overlap with the previous coil but specifically outside the coil diameter but inside the polyester covering. During construction, the polyester covering is sewn to the front and rear covers face to face (outside to outside) so that when the book is closed, the stitching is concealed from the outside. Both free ends (the ends not sewn to the cover and back) are stitched with a turned edge construction. The flexible polyester material forms a covering over the spiral wire to protect it and provide a comfortable grip on the product. The product must bear the valid trademarks FiveStar®Advance™ (products found to be bearing an invalidly licensed or used trademark are not excluded from the scope).
- FiveStar Flex™: A notebook, a notebook organizer, or binder with plastic polyolefin front and rear covers joined by 300 denier polyester spine cover extending the entire length of the spine and bound by a 3-ring plastic fixture. The polyolefin plastic covers are of a specific thickness; front cover is 0.019 inches (within normal manufacturing tolerances) and rear cover is 0.028 inches (within normal manufacturing tolerances). During construction, the polyester covering is sewn to the front cover face to face (outside to outside) so that when the book is closed, the stitching is

concealed from the outside. During construction, the polyester cover is sewn to the back cover with the outside of the polyester spine cover to the inside back cover. Both free ends (the ends not sewn to the cover and back) are stitched with a turned edge construction. Each ring within the fixture is comprised of a flexible strap portion that snaps into a stationary post which forms a closed binding ring. The ring fixture is riveted with six metal rivets and sewn to the back plastic cover and is specifically positioned on the outside back cover. The product must bear the valid trademark FiveStar Flex™ (products found to be bearing an invalidly licensed or used trademark are not excluded from the scope).

Merchandise subject to this order is typically imported under the following Harmonized Tariff Schedule of the United States (HTSUS) subheadings: 4811.90.9035, 4811.90.9080, 4820.30.0040, 4810.22.5044, 4811.90.9050, 4811.90.9090, 4820.10.2010, 4820.10.2020, 4820.10.2030, 4820.10.2040, 4820.10.2050, 4820.10.2060, and 4820.10.4000.[6] The HTSUS headings are provided for convenience and customs purposes; however, the written description of the scope of this order is dispositive.

Since the issuance of the order, the Department has clarified the scope of the order in response to numerous scope inquiries. In addition, on September 23, 2011, the Department revoked, in part, the PRC AD order with respect to FiveStar® Advance™ notebooks and notebook organizers without PVC coatings.[7]

Final Rescission of Review With Respect to Company With No Valid Address

The Department preliminarily rescinded the review with respect to Hwa Fuh/Li Teng because the Department was unable to deliver the initial questionnaire to the company using the address provided by Petitioners. Since we did not receive any comments on our *Preliminary Results,* we are rescinding the review with respect to Hwa Fuh/Li Teng in these final results, in accordance with our practice of rescinding the review of companies when the questionnaires sent to these companies were returned to the Department because of undeliverable addresses.[8]

Company With No-Shipments Assertion

Lian Li timely submitted a certification of non-shipment of subject merchandise to the United States during the POR. In the *Preliminary Results,* consistent with its practice, the Department stated its intent to continue the review of Lian Li. Because there is no information on the record which indicates that Lian Li made shipments of subject merchandise which entered the United States during the POR, including our analysis of the CBP data, and because we did not receive any comments on our *Preliminary Results,* we continue to determine that Lian Li had no sales to the United States during the POR. In accordance with the Department's *Assessment of Antidumping Duties*[9] and past practice,[10] we find it appropriate in this case to instruct CBP to liquidate any existing entries of merchandise produced by Lian Li and exported by other parties at the PRC-wide entity rate. Therefore, the Department will issue appropriate instructions to CBP for any entries made under Lian Li's name during the POR.

PRC-Wide Entity

In the *Preliminary Results,* the Department determined that Leo/Denmax failed to demonstrate its eligibility for a separate rate and was considered part of the PRC-wide entity.[11] After issuing the *Preliminary Results,* the Department did not receive any comments from interested parties. Because nothing has changed with respect to these companies since the *Preliminary Results,* we continue to find Leo/Denmax to be part of the PRC-wide entity.

Final Results of Review

The Department has made no changes to the *Preliminary Results.* As a result of our review, we determine that the following margin exists for the period September 1, 2011, through August 31, 2012:

Exporter	Weighted-average margin (percent)
PRC-wide Entity (including Leo/Denmax)	258.21

Assessment Rates

Pursuant to section 751(a)(2)(A) of the Act and 19 CFR 351.212(b)(1), the Department has determined, and CBP shall assess, antidumping duties on all appropriate entries of subject merchandise and deposits of estimated duties, where applicable, in accordance with the final results of this review. The Department intends to issue assessment instructions to CBP 15 days after the date of publication of these final results of review.

Cash Deposit Requirements

The following cash deposit requirements will be effective upon publication of the notice of final results of this administrative review for all shipments of certain lined paper products from the PRC entered, or withdrawn from warehouse, for consumption on or after the date of

[6] In the *Preliminary Results,* we inadvertently listed only the following eight HTSUS numbers: 4810.22.5044, 4811.90.9050, 4820.10.2010, 4820.10.2020, 4820.10.2030, 4820.10.2040, 4820.10.2060, and 4820.10.4000. The certain lined paper products order covers 13 HTSUS numbers currently. *See Certain Lined Paper Products From India: Notice of Preliminary Results of Antidumping Duty Administrative Review,* 76 FR 62343 (October 7, 2011) at footnote 3 for the latest update of the HTS numbers for the certain lined paper products *order; see also* Memorandum from Gayle Longest, Case Analyst, through James Terpstra to the File, dated July 6, 2011 and July 11, 2011, where additional HTSUS numbers were added to the certain lined paper products order based on requests from a National Import Specialist of CBP.

[7] *See Certain Lined Paper Products From People's Republic of China: Final Results of Antidumping Duty Changed Circumstances Review and Revocation, in Part,* 76 FR 60803 (September 30, 2011).

[8] *See* 19 CFR 351.213(d)(3) and *Certain Steel Concrete Reinforcing Bars from Turkey; Preliminary Results and Partial Rescission of Antidumping Duty Administrative Review,* 71 FR 26,455, 26,457 (May 5, 2006) (unchanged in *Certain Steel Concrete Reinforcing Bars From Turkey: Final Results and Rescission of Antidumping Duty Administrative Review in Part,* 71 FR 65082 (November 7, 2006)); *see also Certain Frozen Warmwater Shrimp from India: Preliminary Results and Partial Rescission of Antidumping Duty Administrative Review,* 72 FR 10658, (March 9, 2007) (unchanged in *Certain Frozen Warmwater Shrimp from India: Final Results and Partial Rescission of Antidumping Duty Administrative Review,* 72 FR 52055 (September 12, 2007)).

[9] *See Non-Market Economy Antidumping Proceedings: Assessment of Antidumping Duties,* 76 FR 65694 (October 24, 2011) (*Assessment of Antidumping Duties*); *see also Antidumping and Countervailing Duty Proceedings: Assessment of Antidumping Duties,* 68 FR 23954 (May 6, 2003). In *Assessment of Antidumping Duties,* we explained that, for entries that are not reported in the reviewed company's U.S. sales databases submitted to the Department during an administrative review, or otherwise determined not covered by the review (*i.e.,* the reviewed exporter claims no shipments), the Department will instruct CBP to liquidate such entries at the non-market economy wide rate as opposed to the company-specific rate declared by the importer at the time of entry, thereby ensuring that this practice in NME proceedings will be consistent with the application of the same liquidation practice in market-economy proceedings.

[10] *See, e.g., Certain Frozen Warmwater Shrimp From the People's Republic of China: Preliminary Results and Preliminary Partial Rescission of Fifth Antidumping Duty Administrative Review,* 76 FR 8338 (February 14, 2011) (unchanged in *Administrative Review of Certain Frozen Warmwater Shrimp From the People's Republic of China: Final Results and Partial Rescission of Antidumping Duty Administrative Review,* 76 FR 51940 (August 19, 2011)).

[11] *See Preliminary Results.*

publication, as provided by section 751(a)(2)(C) of the Act: (1) For previously investigated or reviewed PRC and non-PRC exporters not listed above that have separate rates, the cash deposit rate will continue to be the exporter-specific rate published for the most recent period; (2) for all PRC exporters of subject merchandise which have not been found to be entitled to a separate rate, the cash-deposit rate will be PRC-wide rate of 258.21 percent; and (3) for all non-PRC exporters of subject merchandise which have not received their own rate, the cash-deposit rate will be the rate applicable to the PRC exporter that supplied that non-PRC exporter. These deposit requirements, when imposed, shall remain in effect until further notice.

Notification to Importers

This notice serves as a final reminder to importers of their responsibility under 19 CFR 351.402(f)(2) to file a certificate regarding the reimbursement of antidumping duties prior to liquidation of the relevant entries during this review period. Failure to comply with this requirement could result in the Department's presumption that reimbursement of antidumping duties occurred and the subsequent assessment of double antidumping duties.

Notification Regarding APOs

This notice also serves as a reminder to parties subject to administrative protective orders (APO) of their responsibility concerning the return or destruction of proprietary information disclosed under APO in accordance with 19 CFR 351.305(a)(3). Timely written notification of the destruction of APO materials or conversion to judicial protective order is hereby requested. Failure to comply with the regulations and terms of an APO is a sanctionable violation.

We are issuing and publishing these results and this notice in accordance with sections 751(a)(1) and 777(i)(1) of the Act.

Dated: October 23, 2013.

Paul Piquado,

Assistant Secretary for Enforcement and Compliance.

[FR Doc. 2013–25998 Filed 10–30–13; 8:45 am]

BILLING CODE 3510–DS–P

DEPARTMENT OF COMMERCE

International Trade Administration

[A–570–893]

Certain Frozen Warmwater Shrimp From the People's Republic of China: Partial Rescission of Administrative Review; 2012–2013

AGENCY: Enforcement and Compliance, formerly Import Administration, International Trade Administration, Department of Commerce.

DATES: *Effective Date:* October 31, 2013.

FOR FURTHER INFORMATION CONTACT: Josh Startup, AD/CVD Operations, Office V, Enforcement and Compliance, International Trade Administration, U.S. Department of Commerce, 14th Street and Constitution Avenue NW., Washington DC 20230; (202) 482–5260.

Background

On March 29, 2013, the Department of Commerce (''the Department'') published in the **Federal Register** a notice of initiation of an administrative review of the antidumping duty order on certain frozen warmwater shrimp (''shrimp'') from the People's Republic of China (''PRC'') covering the period February 1, 2012 through January 31, 2013.[1] On May 24, 2013, the Department selected Zhanjiang Regal Integrated Marine Resources Co., Ltd., (''Regal'') as a mandatory respondent.[2] On September 12, 2013, the Department published the final results of the seventh administrative review of shrimp (''AR7'') from the PRC, in which the Department revoked the *Order*[3] with respect to Regal.[4]

Partial Rescission

Because the Department revoked the *Order* with respect to Regal effective February 1, 2012,[5] entries made by Regal on or after that date are not subject to the *Order.* Therefore, we are rescinding this review with respect to Regal.

Assessment Rates

Pursuant to the *AR7 Final Results,* the Department instructed Customs and Border Protection (''CBP'') to terminate the suspension of liquidation for subject merchandise exported by Regal that was entered, or withdrawn from warehouse, for consumption, on or after February 1, 2012, and instructed CBP to refund, with interest, any cash deposits for such entries. We intend to send instructions to CBP to notify them that this review is rescinded with respect to Regal.

Notification to Importers

This notice serves as a final reminder to importers for whom this review is being rescinded, as of the publication date of this notice, of their responsibility under 19 CFR 351.402(f)(2) to file a certificate regarding the reimbursement of antidumping duties prior to liquidation of the relevant entries during this review period. Failure to comply with this requirement could result in the Secretary's presumption that reimbursement of the antidumping duties occurred and the subsequent assessment of double antidumping duties.

Administrative Protective Orders

This notice also serves as a reminder to parties subject to administrative protective order (''APO'') of their responsibility concerning the return or destruction of proprietary information disclosed under APO in accordance with 19 CFR 351.305, which continues to govern business proprietary information in this segment of the proceeding. Timely written notification of the return or destruction of APO materials, or conversion to judicial protective order, is hereby requested. Failure to comply with the regulations and terms of an APO is a violation which is subject to sanction.

This notice is issued and published in accordance with sections 751(a)(1) and 777(i)(1) of the Tariff Act of 1930, as amended, and 19 CFR 351.213(d)(4).

Dated: October 25, 2013.

Christian Marsh,

Deputy Assistant Secretary for Antidumping and Countervailing Duty Operations.

[FR Doc. 2013–26012 Filed 10–30–13; 8:45 am]

BILLING CODE 3510–DS–P

[1] *See Initiation of Antidumping and Countervailing Duty Administrative Reviews and Request for Revocation In Part,* 78 FR 19197 (March 29, 2013).

[2] *See* Memorandum To: James Doyle, Director, Office 9, From: Alan Ray, Senior International Trade Analyst, Office 9, Re: Antidumping Duty Administrative Review of Certain Frozen Warmwater Shrimp from the People's Republic of China: Selection of Respondents for Individual Review, at 7.

[3] *See Notice of Final Determination of Sales at Less Than Fair Value: Certain Frozen and Canned Warmwater Shrimp From the People's Republic of China,* 69 FR 70997 (December 8, 2004) (''*Order*'').

[4] *See Certain Frozen Warmwater Shrimp From the People's Republic of China: Final Results of Administrative Review; 2011–2012,* 78 FR 56209 (September 12, 2013) (''*AR7 Final Results*'').

[5] *Id.,* 78 FR at 56210.

DEPARTMENT OF COMMERCE

International Trade Administration

[A–570–992, A–560–826]

Monosodium Glutamate From the People's Republic of China, and the Republic of Indonesia: Initiation of Antidumping Duty Investigations

AGENCY: Enforcement and Compliance, formerly Import Administration, International Trade Administration, Department of Commerce.

DATES: *Effective Date:* October 31, 2013.

FOR FURTHER INFORMATION CONTACT: Jun Jack Zhao (the People's Republic of China (PRC)) or Gene Calvert (the Republic of Indonesia (Indonesia)) at (202) 482–1396 or (202) 482–3586, respectively, AD/CVD Operations, Office VII, Enforcement and Compliance, International Trade Administration, U.S. Department of Commerce, 14th Street and Constitution Avenue NW., Washington, DC 20230.

SUPPLEMENTARY INFORMATION:

The Petitions

On September 16, 2013, the Department of Commerce (the Department) received antidumping duty (AD) petitions concerning imports of monosodium glutamate (MSG) from the PRC and Indonesia filed in proper form on behalf of Ajinomoto North America Inc. (Petitioner).[1] Petitioner is a domestic producer of MSG. On September 20, 2013, the Department requested additional information and clarification of certain areas of the petitions.[2] Petitioner filed responses to these requests on September 24, 2013, and September 26, 2013.[3]

In accordance with section 732(b) of the Tariff Act of 1930, as amended (the Act), Petitioner alleges that imports of MSG from Indonesia and the PRC are being, or are likely to be, sold in the United States at less than fair value within the meaning of section 731 of the Act, and that such imports are materially injuring, or threatening material injury to, an industry in the United States. Also, consistent with section 732(b)(1) of the Act, the petitions are accompanied by information reasonably available to Petitioner in support of its allegations.

The Department finds that Petitioner filed these petitions on behalf of the domestic industry because Petitioner is an interested party as defined in section 771(9)(C) of the Act. The Department also finds that Petitioner has demonstrated sufficient industry support with respect to the initiation of the AD investigations that Petitioner is requesting.[4]

Periods of Investigation

Because the petitions were filed on September 16, 2013, the period of investigation (POI) for the PRC investigation is January 1, 2013, through June 30, 2013. The POI for the Indonesia investigation is July 1, 2012, through June 30, 2013.[5]

Scope of the Investigations

The product covered by these investigations is MSG from Indonesia and the PRC.[6]

Comments on the Scope of the Investigations

During our review of the petitions, we discussed the scope with Petitioner to ensure that it is an accurate reflection of the product for which the domestic industry is seeking relief. Moreover, as discussed in the preamble to the regulations,[7] we are setting aside a period for interested parties to raise issues regarding product coverage. The Department encourages all interested parties to submit such comments by November 12, 2013, 5:00 p.m. Eastern Time, which is 20 calendar days from the signature date of this notice. In addition, all comments and submissions to the Department must be filed electronically using Enforcement and Compliance's electronic service system (IA ACCESS).[8] An electronically filed document must be received successfully in its entirety by the Department's electronic records system, IA ACCESS, by the time and date noted above. Documents excepted from the electronic submission requirements must be filed manually (*i.e.,* in paper form) with Enforcement and Compliance's APO/Dockets Unit, Room 1870, U.S. Department of Commerce, 14th Street and Constitution Avenue NW., Washington, DC 20230, and stamped with the date and time of receipt by the deadline noted above. All comments must be filed on the records of both the PRC and Indonesia AD investigations, as well as the concurrent PRC and Indonesia countervailing duty (CVD) investigations.

The period for scope comments is intended to provide the Department with ample opportunity to consider all comments and to consult with parties prior to the issuance of the preliminary determinations.

Comments on the Product Characteristics for Antidumping Duty Questionnaires

The Department requests comments from interested parties regarding the appropriate physical characteristics of MSG to be reported in response to the Department's AD questionnaires. This information will be used to identify the key physical characteristics of the subject merchandise in order to report accurately the relevant factors of production and costs, as well as to develop appropriate product-comparison criteria.

Interested parties may provide any information or comments they feel are relevant to the development of an accurate list of physical characteristics. Specifically, they may provide comments as to which characteristics are appropriate to use as: (1) General product characteristics and (2) product-comparison criteria. We note that it is not always appropriate to use all product characteristics as product-comparison criteria. We base product-comparison criteria on meaningful commercial differences among products. In other words, while there may be some physical product characteristics utilized by manufacturers to describe MSG, it may be that only a select few product characteristics take into account commercially meaningful physical characteristics. In addition, interested parties may comment on the order in which the physical characteristics should be used in matching products. Generally, the Department attempts to list the most important physical characteristics first and the least important characteristics last.

In order to consider the suggestions of interested parties in developing and issuing the AD questionnaires, we must receive comments on product characteristics by November 12, 2013. Rebuttal comments must be received by November 18, 2013. All comments and submissions to the Department must be

[1] *See* Antidumping Duty Petitions on Monosodium Glutamate from the PRC and Indonesia, filed on September 16, 2013 (the petitions).

[2] *See* Petitions for the Imposition of Antidumping Duties and Countervailing Duties on Imports of Monosodium Glutamate from the People's Republic of China and the Republic of Indonesia: Supplemental Questions, September 20, 2013.

[3] *See* Supplement to the AD/CVD Petitions, September 24, 2013 (AD/CVD Supplement).

[4] *See* the ''Determination of Industry Support for the Petitions'' section, below.

[5] *See* 19 CFR 351.204(b)(1).

[6] *See* Appendix I of this notice for a full description of the scope of these investigations.

[7] *See Antidumping Duties; Countervailing Duties; Final Rule,* 62 FR 27296, 27323 (May 19, 1997).

[8] *See Antidumping and Countervailing Duty Proceedings: Electronic Filing Procedures; Administrative Protective Order Procedures,* 76 FR 39263 (July 6, 2011) for details of the Department's electronic filing requirements, which went into effect on August 5, 2011. Information on help using IA ACCESS can be found at *https://iaaccess.trade.gov/help.aspx* and a handbook can be found at *https://iaaccess.trade.gov/help/Handbook%20on%20Electronic%20Filling%20Procedures.pdf.*

filed electronically using IA ACCESS, as referenced above.

Filing Requirements

All submissions to the Department must be filed electronically using IA ACCESS. An electronically filed document must be received successfully in its entirety by the time and date noted above. Documents excepted from the electronic submission requirements must be filed manually (*i.e.,* in paper form) with Enforcement and Compliance's APO/Dockets Unit, Room 1870, U.S. Department of Commerce, 14th Street and Constitution Avenue NW., Washington, DC 20230, and stamped with the date and time of receipt by the deadline noted above.

Tolling of Deadlines

As explained in the memorandum from the Assistant Secretary for Enforcement and Compliance, the Department has exercised its discretion to toll deadlines for the duration of the closure of the Federal Government from October 1, through October 16, 2013.[9] Therefore, all deadlines in this segment of the proceeding have been tolled by 16 days. The revised deadline for the initiation of these investigations is October 23, 2013.

Determination of Industry Support for the Petitions

Section 732(b)(1) of the Act requires that a petition be filed on behalf of the domestic industry. Section 732(c)(4)(A) of the Act provides that a petition meets this requirement if the domestic producers or workers who support the petition account for: (i) At least 25 percent of the total production of the domestic like product; and (ii) more than 50 percent of the production of the domestic like product produced by that portion of the industry expressing support for, or opposition to, the petition. Moreover, section 732(c)(4)(D) of the Act provides that, if the petition does not establish support of domestic producers or workers accounting for more than 50 percent of the total production of the domestic like product, the Department shall: (i) Poll the industry or rely on other information in order to determine if there is support for the petition, as required by subparagraph (A); or (ii) determine industry support using a statistically valid sampling method to poll the ''industry.''

Section 771(4)(A) of the Act defines the ''industry'' as the producers as a whole of a domestic like product. Thus, to determine whether a petition has the requisite industry support, the statute directs the Department to look to producers and workers who produce the domestic like product. The International Trade Commission (ITC), which is responsible for determining whether ''the domestic industry'' has been injured, must also determine what constitutes a domestic like product in order to define the industry. While both the Department and the ITC must apply the same statutory definition regarding the domestic like product (*see* section 771(10) of the Act), they do so for different purposes and pursuant to a separate and distinct authority. In addition, the Department's determination is subject to limitations of time and information. Although this may result in different definitions of the like product, such differences do not render the decision of either agency contrary to law.[10]

Section 771(10) of the Act defines the domestic like product as ''a product which is like, or in the absence of like, most similar in characteristics and uses with, the article subject to an investigation under this title.'' Thus, the reference point from which the domestic like product analysis begins is ''the article subject to an investigation'' (*i.e.,* the class or kind of merchandise to be investigated, which normally will be the scope as defined in the petitions).

With regard to the domestic like product, Petitioner does not offer a definition of the domestic like product distinct from the scope of the investigations. Based on our analysis of the information submitted on the record, we have determined that MSG constitutes a single domestic like product and we have analyzed industry support in terms of that domestic like product.[11]

In determining whether Petitioner has standing under section 732(c)(4)(A) of the Act, we considered the industry support data contained in the petitions with reference to the domestic like product as defined in the ''Scope of the Investigations,'' in Appendix I of this notice. To establish industry support, Petitioner provided its own production of the domestic like product in 2012.[12] Petitioner states that there are no other known producers of MSG in the United States; therefore, the petitions are supported by 100 percent of the U.S. industry.[13]

Our review of the data provided in the petitions and other information readily available to the Department indicates that Petitioner has established industry support.[14] First, the petitions established support from domestic producers (or workers) accounting for more than 50 percent of the total production of the domestic like product and, as such, the Department is not required to take further action in order to evaluate industry support (*e.g.,* polling).[15] Second, the domestic producers (or workers) have met the statutory criteria for industry support under section 732(c)(4)(A)(i) of the Act because the domestic producers (or workers) who support the petitions account for at least 25 percent of the total production of the domestic like product.[16] Finally, the domestic producers (or workers) have met the statutory criteria for industry support under section 732(c)(4)(A)(ii) of the Act because the domestic producers (or workers) who support the petitions account for more than 50 percent of the production of the domestic like product produced by that portion of the industry expressing support for, or opposition to, the petitions.[17] Accordingly, the Department determines that the petitions were filed on behalf of the domestic industry within the meaning of section 732(b)(1) of the Act.

The Department finds that Petitioner filed the petitions on behalf of the domestic industry because it is an interested party as defined in section 771(9)(C) of the Act and it has demonstrated sufficient industry support with respect to the AD investigations that it is requesting the Department initiate.[18]

[9] *See* Memorandum for the Record from Paul Piquado, Assistant Secretary for Enforcement and Compliance, ''Deadlines Affected by the Shutdown of the Federal Government'' (October 18, 2013).

[10] *See USEC, Inc.* v. *United States,* 132 F. Supp. 2d 1, 8 (CIT 2001) (citing *Algoma Steel Corp., Ltd.* v. *United States,* 688 F. Supp. 639, 644 (CIT 1988), *aff'd* 865 F.2d 240 (Fed. Cir. 1989)).

[11] For a discussion of the domestic like product analysis in this case, *see* Antidumping Duty Investigation Initiation Checklist: Monosodium Glutamate from Indonesia (Indonesia AD Initiation Checklist) at Attachment II, Analysis of Industry Support for the Petitions Covering Monosodium Glutamate from Indonesia and the People's Republic of China (Attachment II); and Antidumping Duty Investigation Initiation Checklist: Monosodium Glutamate from the People's Republic of China (PRC AD Initiation Checklist), at Attachment II. These checklists are dated concurrently with this notice and on file electronically via IA ACCESS. Access to documents filed via IA ACCESS is also available in the Central Records Unit, Room 7046 of the main Department of Commerce building.

[12] *See* Volume I of the Petitions, at Exhibit I–1.B.

[13] *Id.,* at 3 and Exhibits I–1.A and I–1.B.

[14] *See* Indonesia AD Checklist and PRC AD Checklist, at Attachment II.

[15] *See* section 732(c)(4)(D) of the Act; *see also* Indonesia AD Checklist and PRC AD Checklist, at Attachment II.

[16] *See* Indonesia AD Checklist and PRC AD Checklist, at Attachment II.

[17] *Id.*

[18] *Id.*

Allegations and Evidence of Material Injury and Causation

Petitioner alleges that the U.S. industry producing the domestic like product is being materially injured, or is threatened with material injury, by reason of the imports of the subject merchandise sold at less than normal value (NV). In addition, Petitioner alleges that subject imports exceed the negligibility threshold provided for under section 771(24)(A) of the Act.[19] Petitioner contends that the industry's injured condition is illustrated by reduced market share; underselling and price depression or suppression; lost sales and revenues; and decline in financial performance.[20] We have assessed the allegations and supporting evidence regarding material injury, threat of material injury, and causation, and we have determined that these allegations are properly supported by adequate evidence and meet the statutory requirements for initiation.[21]

Allegations of Sales at Less Than Fair Value

The following is a description of the allegations of sales at less than fair value upon which the Department has based its decision to initiate investigations of imports of MSG from Indonesia and the PRC. The sources of data for the deductions and adjustments relating to U.S. price and NV are discussed in greater detail in the Indonesia AD Initiation Checklist and the PRC AD Initiation Checklist.

Export Price

Indonesia

For Indonesia, Petitioner calculated an EP based on monthly AUVs for the POI for U.S. imports of MSG for consumption from Indonesia under HTSUS subheading 2922.42.1000 (the subheading relevant to MSG) using the ITC's Dataweb. Petitioner also calculated a POI weighted-average AUV.[22] From these AUVs, Petitioner deducted an amount for foreign brokerage and handling charges in Indonesia, and foreign inland freight from the manufacturing plant to the port of exportation.[23]

PRC

Petitioner calculated an export price (EP) based on monthly average unit values (AUVs) for the POI for U.S. imports of MSG for consumption from the PRC under Harmonized Tariff Schedule of the United States (HTSUS) subheading 2922.42.1000 (the subheading relevant to MSG) using the ITC's Dataweb. Petitioner also calculated a POI weighted-average AUV. In addition, using detailed information regarding the month, district of unlading, and district of entry, Petitioner was able to estimate certain dumping margins for individual transactions between a Chinese exporter of MSG and a U.S. importer of MSG by matching ship manifest data to the official import statistics. Petitioner used official import statistics to calculate the U.S. price for two such individual transactions.[24] Petitioner deducted an amount for foreign brokerage and handling charges in the PRC, and foreign inland freight from the manufacturing plant to the port of exportation from the AUVs and the import prices for the individual import transactions.[25]

Normal Value

Indonesia

Petitioner based NV on constructed value (CV), as neither a home market nor a third-country price was reasonably available. Pursuant to section 773(e) of the Act, CV consists of the cost of manufacturing (COM); SG&A expenses; financial expenses; packing expenses; and profit. Petitioner owns and operates two MSG production facilities in Indonesia, PT Ajinomoto Indonesia (AJIND) and PT Ajinex International (AJINEX) which, according to Petitioner, are similar to Indonesian MSG producer CJ Indonesia's production facilities in terms of production capacity, production equipment, and production inputs. Petitioner calculated COM and packing expenses based on the actual cost data of the Petitioner's MSG producers in Indonesia.

To determine SG&A and profit rates, Petitioner relied on the average rates calculated based on the financial statements for AJIND for the year ended March 31, 2013 and the financial statements for AJINEX for the year ended March 31, 2012, because the March 31, 2013 financial statements for AJINEX were not available to Petitioner at the time of the filing of the petition.

To calculate the financial expense rate, Petitioner relied on the financial statements of CJ Indonesia's parent company, CJ Cheil Jedang Corporation, for the fiscal year ending December 31, 2011.[26]

PRC

Petitioner claims that the PRC is a non-market economy (NME) country, and that this designation remains in effect as of the date of this petition.[27] The presumption of NME status for the PRC has not been revoked by the Department and, therefore, in accordance with section 771(18)(C)(i) of the Act, remains in effect for purposes of the initiation of this investigation. Accordingly, the NV of the product for the investigation is appropriately based on factors of production valued in a surrogate market-economy country in accordance with section 773(c) of the Act. In the course of this investigation, all parties, including the public, will have the opportunity to provide relevant information related to the issues of the PRC's NME status and granting of separate rates to individual exporters.

Petitioner contends that Indonesia is the appropriate surrogate country for the PRC because: (1) It is at a level of economic development comparable to that of the PRC, (2) it is a significant producer of comparable merchandise relative to the MSG that is the subject of the petition, and (3) the data available from Indonesia for valuing factors of production are available and reliable.[28] Based on the information provided by Petitioner, we conclude that it is appropriate to use Indonesia as a surrogate country for initiation purposes.[29] After initiation of this investigation, interested parties will have the opportunity to submit comments regarding surrogate country selection and, pursuant to 19 CFR 351.301(c)(3)(i), will be provided an opportunity to submit publicly available information to value factors of production (FOPs) within 40 days

[19] *See* Volume I of the Petitions, at 22.

[20] *Id.,* at 13–40 and Exhibits I–1, I–8, I–10 and I–12 through I–32; *see also* AD/CVD Supplement, at 2 and Exhibit SQR–1.

[21] *See* PRC AD Initiation Checklist and PRC AD Initiation Checklist, at Attachment III, Analysis of Allegations and Evidence of Material Injury and Causation for the Petitions Covering Monosodium Glutamate from Indonesia and the People's Republic of China.

[22] *See* Volume IV of the Petitions at 2 and Exhibits IV–1 through IV–3. We note that using a POI weighted-average AUV is consistent with our past practice with respect to using AUV data as the basis for U.S. price. Furthermore, using the POI weighted-average AUV in the margin calculation results in a positive margin. Therefore, we have relied on the POI-weighted average AUV as the basis for EP based on AUVs.

[23] *Id.* at 2–3 and Exhibits IV–4 through IV–13.

[24] *See* Volume II of the Petitions at 4–5 and Exhibits II–4 through II–7.

[25] *Id.* at 5–6 and Exhibits II–8 through II–18. We note that using a POI weighted-average AUV is consistent with our past practice with respect to using AUV data as the basis for U.S. price. Furthermore, using the POI weighted-average AUV in the margin calculation results in a positive margin. Therefore, we have relied on the POI-weighted average AUV as the basis for EP based on AUVs. We have also relied on the individual transaction prices calculated by Petitioner.

[26] *See* Indonesia AD Initiation Checklist.

[27] *See* Volume II of the Petitions at 1.

[28] *Id.* at 2–4 and Exhibits II–2 and II–3.

[29] *See* PRC AD Initiation Checklist.

before the scheduled date of the preliminary determination.[30]

Petitioner calculated NV using the Department's NME methodology as required by 19 CFR 351.202(b)(7)(i)(C) and 19 CFR 351.408. In calculating NV, Petitioner based the quantity of each of the inputs used to manufacture the subject merchandise on its own consumption experience, which, Petitioner contends is, to the best of its knowledge, similar to the consumption of PRC producers.[31]

Petitioner valued the factors of production using reasonably available, public surrogate country data, specifically, Indonesian import data from the Global Trade Atlas (GTA) for the period December 2012—May 2013, the most recent six-month period for which data were available.[32] Petitioners excluded all import values from countries previously determined by the Department to maintain broadly available, non-industry-specific export subsidies and from countries previously determined by the Department to be NME countries. In addition, in accordance with the Department's practice, the average import values exclude imports that were labeled as originating from an unidentified country. In addition, Petitioner made currency conversions, where applicable, based on the POI-average Indonesian Rupiah/U.S. dollar exchange rates.[33] The Department determines that the surrogate values used by Petitioner are reasonably available and, thus, are acceptable for purposes of initiation.

Petitioner valued direct material costs using Indonesia import data from the GTA.[34] Petitioner applied certain conversion factors to align the units of measure with its own factors of production.[35]

Petitioner calculated the labor expense rate using 2010 data for Indonesia from Chapter 5B of the International Labor Organization's (ILO's) wage data because wage data from Chapter 6 was not available for Indonesia.[36]

Petitioner based the factor values for electricity and steam on the industry rates set forth in the 2012 Handbook of Energy and Economic Statistics of Indonesia, published by the Indonesian Ministry of Energy and Mineral Resources.[37] Petitioner calculated the factor value for water based on Indonesian water rates.[38]

Petitioner calculated financial ratios (*i.e.,* factory overhead expenses, selling, general, and administrative (SG&A) expenses, and profit) based on the most recent audited financial statements of PT Budi Acid Jaya, an Indonesian manufacturer of citric acid (a product that Petitioner claims is comparable to MSG), and majority owner of PT Ve Wong Indonesia, an Indonesian producer of MSG.[39]

For packing inputs, Petitioner claims that the majority of MSG imported to the United States from the PRC is packaged in 50-pound bags. Petitioner obtained Indonesian import data from the GTA to derive the surrogate values for these bags.[40]

Fair Value Comparisons

Based on the data provided by Petitioner, there is reason to believe that imports of MSG from Indonesia and the PRC are being, or are likely to be, sold in the United States at less than fair value. Based on comparisons of EP to CV in accordance with section 773(a)(4) of the Act, Petitioner calculated the estimated dumping margins, based on POI weighted-average AUVs, to be 72.59 percent with respect to imports of MSG from the PRC, and 55.25 percent with respect to imports of MSG from Indonesia. For the individual transactions between a PRC exporter and a U.S. importer, Petitioner calculated margins between 103.76 and 204.69 percent.

Initiation of AD Investigations

Based on our examination of the petitions on MSG from Indonesia and the PRC, the Department finds that the petitions meet the requirements of section 732 of the Act. Therefore, we are initiating AD investigations to determine whether imports of MSG from Indonesia and the PRC are being, or likely to be, sold in the United States at less than fair value. In accordance with section 733(b)(1)(A) of the Act and 19 CFR 351.205(b)(1), unless postponed, we will issue our preliminary determinations no later than 140 days after the publication date of this initiation notice.

Respondent Selection

Indonesia

The Department intends to select respondents based on U.S. Customs and Border Protection (CBP) data for U.S. imports during the POI (*i.e.,* July 1, 2012, through June 30, 2013, for Indonesia) under the following HTSUS numbers: 2922.42.10.00, 2922.42.50.00, 2103.90.72.00, 2103.90.74.00, 2103.90.78.00, 2103.90.80.00, and 2103.90.90.91. We intend to release the CBP data under Administrative Protective Order (APO) to all parties with access to information protected by APO within five days of the publication of the initiation of these investigations. Interested parties may submit comments regarding the CBP data and respondent selection within five calendar days of the publication of the initiation of these investigations. Comments on respondent selection must be filed electronically using IA ACCESS in accordance with the filing requirements, referenced above. We intend to make our decision regarding respondent selection within 20 days of the publication of this notice.

PRC

With respect to the PRC, in accordance with our standard practice for respondent selection for NME countries, we intend to issue quantity and value questionnaires to each potential respondent, and will base respondent selection on the responses received. In addition, the Department will post the quantity and value questionnaire along with the filing instructions on the Enforcement and Compliance Web site (*http://www.trade.gov/enforcement/news.asp*). Exporters and producers of MSG from the PRC that do not receive quantity and value questionnaires via mail may still submit a quantity and value response, and can obtain a copy from the Enforcement and Compliance Web site. The quantity and value questionnaire must be submitted by all PRC exporters/producers by no later than November 12, 2013. All quantity and value questionnaires must be filed electronically using IA ACCESS.

Separate Rates

In order to obtain separate rate status in an NME investigation, exporters and producers must submit a separate rate application.[41] The specific requirements

[30] *See* 19 CFR 351.301(c)(3)(i). Note that this is the revised regulation published on April 1, 2013. *See http://www.gpo.gov/fdsys/pkg/CFR-2013-title19-vol3/html/CFR-2013-title19-vol3.htm.*

[31] *See* Volume II of the Petition at 7–8.

[32] *See, e.g.,* Volume II of the Petition at 8 and at Exhibit II–23.

[33] *Id.* at Exhibit II–14.

[34] *Id.,* at 8 and at Exhibit II–23.

[35] *Id.,* at 8.

[36] *Id.,* at 10.

[37] *Id.*

[38] *Id.*

[39] *Id.,* at 11.

[40] *Id.,* at 11–12.

[41] *See* Policy Bulletin 05.1: Separate-Rates Practice and Application of Combination Rates in Antidumping Investigation involving Non-Market Economy Countries (April 5, 2005) (Separate Rates and Combination Rates Bulletin), available on the

Continued

for submitting the separate rate application in the PRC investigation are outlined in detail in the application itself, which will be available on the Department's Web site at *http://www.trade.gov/enforcement/news.asp* on the date of publication of this initiation notice in the **Federal Register**. The separate rate application will be due 60 days after the publication of this initiation notice. For exporters and producers who submit a separate rate status application and have been selected as mandatory respondents, these exporters and producers will no longer be eligible for consideration for separate rate status unless they respond to all parts of the Department's AD questionnaire as mandatory respondents. The Department requires that PRC respondents submit a response to the separate rate application by the deadline referenced above in order to receive consideration for separate rate status.

Use of Combination Rates

The Department will calculate combination rates for certain respondents that are eligible for a separate rate in an NME investigation. The Separate Rates and Combination Rates Bulletin states:

{w}hile continuing the practice of assigning separate rates only to exporters, all separate rates that the Department will now assign in its NME investigations will be specific to those producers that supplied the exporter during the period of investigation. Note, however, that one rate is calculated for the exporter and all of the producers which supplied subject merchandise to it during the period of investigation. This practice applies both to mandatory respondents receiving an individually calculated separate rate as well as the pool of non-investigated firms receiving the weighted-average of the individually calculated rates. This practice is referred to as the application of ''combination rates'' because such rates apply to specific combinations of exporters and one or more producers. The cash-deposit rate assigned to an exporter will apply only to merchandise both exported by the firm in question *and* produced by a firm that supplied the exporter during the period of investigation.[42]

Distribution of Copies of the Petitions

In accordance with section 732(b)(3)(A) of the Act, and 19 CFR 351.202(f), copies of the public version of the petitions have been provided to the Governments of Indonesia and the PRC via IA ACCESS. Because of the particularly large number of producers/exporters identified in the petitions, the Department considers the service of the public versions of the petitions to the foreign producers/exporters to be satisfied by the provision of the public versions of the petitions to the Governments of Indonesia and the PRC, consistent with 19 CFR 351.203(c)(2).

ITC Notification

We have notified the ITC of our initiation, as required by section 732(d) of the Act.

Preliminary Determinations by the ITC

The ITC will preliminarily determine, within 45 days after the date on which the Petitions were filed, whether there is a reasonable indication that imports of MSG from Indonesia and the PRC are materially injuring, or threatening material injury to, a U.S. industry.[43] A negative ITC determination for any country will result in the termination of the investigation with respect to that country; otherwise, these investigations will proceed according to statutory and regulatory time limits.

Submission of Factual Information

On April 10, 2013, the Department published *Definition of Factual Information and Time Limits for Submission of Factual Information: Final Rule,* 78 FR 21246 (April 10, 2013), which modified two regulations related to AD and CVD proceedings: (1) The definition of factual information (19 CFR 351.102(b)(21)), and (2) the time limits for the submission of factual information (19 CFR 351.301). The final rule identifies five categories of factual information in 19 CFR 351.102(b)(21), which are summarized as follows: (i) Evidence submitted in response to questionnaires; (ii) evidence submitted in support of allegations; (iii) publicly available information to value factors under 19 CFR 351.408(c) or to measure the adequacy of remuneration under 19 CFR 351.511(a)(2); (iv) evidence placed on the record by the Department; and (v) evidence other than factual information described in (i)–(iv). The final rule requires any party, when submitting factual information, to specify under which subsection of 19 CFR 351.102(b)(21) the information is being submitted and, if the information is submitted to rebut, clarify, or correct factual information already on the record, to provide an explanation identifying the information already on the record that the factual information seeks to rebut, clarify, or correct. The final rule also modified 19 CFR 351.301 so that, rather than providing general time limits, there are specific time limits based on the type of factual information being submitted. These modifications are effective for all proceeding segments initiated on or after May 10, 2013, and thus are applicable to these investigations. Please review the final rule, available at *http://enforcement.trade.gov/frn/2013/1304frn/2013-08227.txt,* prior to submitting factual information for these investigations.

Extension of Time Limits

On September 20, 2013, the Department published *Extension of Time Limits, Final Rule,* 78 FR 57790 (September 20, 2013), which modified one regulation related to AD and CVD proceedings regarding the extension of time limits for submissions in such proceedings (19 CFR 351.302(c)). These modifications are effective for all proceeding segments initiated on or after October 21, 2013, and thus are applicable to this investigation. Please review the final rule, available at *http://www.gpo.gov/fdsys/pkg/FR-2013-09-20/html/2013-22853.htm* prior to requesting an extension.

Certification Requirements

Any party submitting factual information in an AD or CVD proceeding must certify to the accuracy and completeness of that information.[44] Parties are hereby reminded that revised certification requirements are in effect for company/government officials as well as their representatives in all AD or CVD investigations or proceedings initiated on or after August 16, 2013, including these investigations.[45] The formats for the revised certifications are provided at the end of the *Final Rule.* The Department intends to reject factual submissions if the submitting party does not comply with the revised certification requirements.

Notification to Interested Parties

Interested parties must submit applications for disclosure under APO in accordance with 19 CFR 351.305. On January 22, 2008, the Department published *Antidumping and Countervailing Duty Proceedings: Documents Submission Procedures; APO Procedures,* 73 FR 3634 (January 22, 2008). Parties wishing to participate in these investigations should ensure that they meet the requirements of these procedures (*e.g.,* the filing of letters of appearance as discussed at 19 CFR 351.103(d)).

Department's Web site at *http://ia.ita.doc.gov/policy/bull05-1.pdf.*

[42] *See* Separate Rates and Combination Rates Bulletin at 6 (emphasis added).

[43] *See* section 733(a) of the Act.

[44] *See* section 782(b) of the Act.

[45] *See Certifications of Factual Information To Import Administration During Antidumping and Countervailing Duty Proceedings,* 78 FR 42678 (July 17, 2013) (*Final Rule*).

This notice is issued and published pursuant to section 777(i) of the Act.

Dated: October 23, 2013.

Paul Piquado,

Assistant Secretary for Enforcement and Compliance.

Appendix I—Scope of the Investigations

The scope of these investigations covers monosodium glutamate (''MSG''), whether or not blended or in solution with other products. Specifically, MSG that has been blended or is in solution with other product(s) is included in this scope when the resulting mix contains 15% or more of MSG by dry weight. Products with which MSG may be blended include, but are not limited to, salts, sugars, starches, maltodextrins, and various seasonings. Further, MSG is included in these investigations regardless of physical form (including, but not limited to, substrates, solutions, dry powders of any particle size, or unfinished forms such as MSG slurry), end-use application, or packaging.

MSG has a molecular formula of $C_5H_8NO_4Na$, a Chemical Abstract Service (''CAS'') registry number of 6106–04–3, and a Unique Ingredient Identifier (''UNII'') number of W81N5U6R6U.

Merchandise covered by the scope of these investigations is currently classified in the Harmonized Tariff Schedule (''HTS'') of the United States at subheading 2922.42.10.00. Merchandise subject to the investigations may also enter under HTS subheadings 2922.42.50.00, 2103.90.72.00, 2103.90.74.00, 2103.90.78.00, 2103.90.80.00, and 2103.90.90.91. The tariff classifications, CAS registry number, and UNII number are provided for convenience and customs purposes; however, the written description of the scope is dispositive.

[FR Doc. 2013–25804 Filed 10–30–13; 8:45 am]

BILLING CODE 3510–DS–P

DEPARTMENT OF COMMERCE

International Trade Administration

[A–570–994, A–851–803, A–428–842, A–588–871, A–580–871, A–455–804, A–821–821]

Grain-Oriented Electrical Steel From the People's Republic of China, the Czech Republic, Germany, Japan, the Republic of Korea, Poland, and the Russian Federation: Initiation of Antidumping Duty Investigations

AGENCY: Enforcement and Compliance, formerly Import Administration, International Trade Administration, Department of Commerce.

DATES: *Effective Date:* October 31, 2013.

FOR FURTHER INFORMATION CONTACT: Patrick Edwards at (202) 482–8029 (the People's Republic of China (PRC)); Elizabeth Eastwood at (202) 482–3874 (the Czech Republic, Germany, Poland, and the Russian Federation (Russia)); or Steve Bezirganian at (202) 482–1131 (Japan and the Republic of Korea (Korea)), AD/CVD Operations, Enforcement and Compliance, International Trade Administration, U.S. Department of Commerce, 14th Street and Constitution Avenue NW., Washington, DC 20230.

SUPPLEMENTARY INFORMATION:

The Petitions

On September 18, 2013, the Department of Commerce (the Department) received antidumping duty (AD) petitions concerning imports of grain-oriented electrical steel (GOES) from the PRC, the Czech Republic, Germany, Japan, Korea, Poland, and Russia (the Petitions) filed in proper form on behalf of AK Steel Corporation, Allegheny Ludlum, LLC, and the United Steelworkers (collectively, the petitioners).[1] The Petitions were accompanied by one countervailing duty (CVD) petition.[2] The petitioner companies are domestic producers of GOES and the United Steelworkers is the union that represents employees of Allegheny Ludlum, LLC that engage in the production of GOES. On September 23 and 30, 2013, the Department requested additional information and clarification of certain areas of the Petitions.[3] The petitioners filed responses to these requests on September 26, 2013, and October 17, 2013.[4]

In accordance with section 732(b) of the Tariff Act of 1930, as amended (the Act), the petitioners allege that imports of GOES from the PRC, the Czech Republic, Germany, Japan, Korea, Poland, and Russia are being, or are likely to be, sold in the United States at less than fair value within the meaning of section 731 of the Act and that such imports are materially injuring, or threatening material injury to, an industry in the United States. Also, consistent with section 732(b)(1) of the Act, the Petitions are accompanied by information reasonably available to the petitioners supporting their allegations.

The Department finds that the petitioners filed these Petitions on behalf of the domestic industry because the petitioners are interested parties as defined in sections 771(9)(C) and (D) of the Act. The Department also finds that the petitioners have demonstrated sufficient industry support with respect to the initiation of the AD investigations that the petitioners are requesting.[5]

Periods of Investigations

Pursuant to 19 CFR 351.204(b)(1), because the Petitions were filed on September 18, 2013, the period of investigation (POI) for the PRC investigation is January 1, 2013, through June 30, 2013. The POI for the Czech Republic, Germany, Japan, Korea, Poland, and Russia investigations is July 1, 2012, through June 30, 2013.

Scope of the Investigations

The product covered by these investigations is GOES from the PRC, the Czech Republic, Germany, Japan, Korea, Poland and Russia. For a full description of the scope of the investigations, see the ''Scope of the Investigations,'' in Appendix I of this notice.

Comments on the Scope of Investigations

During our review of the Petitions, the Department issued questions to, and received responses from, the petitioners pertaining to the proposed scope to ensure that the scope language in the Petitions would be an accurate reflection of the products for which the domestic industry is seeking relief. As discussed in the preamble to the regulations,[6] we are setting aside a

---

[1] *See* ''Petition for the Imposition of Antidumping Duties on Imports of Grain-Oriented Electrical Steel from the People's Republic of China, the Czech Republic, the Federal Republic of Germany, Japan, the Republic of Korea, Poland and the Russian Federation,'' dated September 18, 2013 (Petitions).

[2] *See* ''Petition for the Imposition of Countervailing Duties on Imports of Grain-Oriented Electrical Steel from the People's Republic of China,'' dated September 18, 2013.

[3] *See* letter from the Department to the petitioners entitled, ''Petition for the Imposition of Antidumping Duties on Imports of Grain-Oriented Electrical Steel from the People's Republic of China, the Czech Republic, the Federal Republic of Germany, Japan, the Republic of Korea, Poland, and the Russian Federation: Supplemental Questions,'' on each of the country-specific records, dated September 23, 2013; *see also* letter from the Department to the petitioners entitled, ''Petition for the Imposition of Antidumping Duties on Imports of Grain-Oriented Electrical Steel from the Russian Federation: Supplemental Questions,'' dated September 30, 2013.

[4] *See* Supplement to all the Petitions, dated September 26, 2013 (Petition Supplement), Supplement to the PRC Petition, dated September 26, 2013, Supplement to the Czech Republic Petition, dated September 26, 2013, Supplement to the Germany Petition, dated September 26, 2013, Supplement to the Japan Petition, dated September 26, 2013, Supplement to the Korea Petition, dated September 26, 2013, Supplement to the Poland Petition, dated September 26, 2013, and Supplement to the Russia Petition, dated September 26, 2013; *see also* Second Supplement to the Czech Petition, dated October 17, 2013, Second Supplement to the Germany Petition, dated October 17, 2013, Second Supplement to the Japan Petition, dated October 17, 2013, Second Supplement to the Korea Petition, dated October 17, 2013, and Second Supplement to the Russia Petition, dated October 17, 2013 (Second Supplement).

[5] *See* the ''Determination of Industry Support for the Petitions'' section.

[6] *See Antidumping Duties; Countervailing Duties; Final rule,* 62 FR 27296, 27323 (May 19, 1997).

period for interested parties to raise issues regarding product coverage. The Department encourages all interested parties to submit such comments by 5:00 p.m. Eastern Time on November 13, 2013. All comments must be filed on the records of the PRC, Czech Republic, Germany, Japan, Korea, Poland, and Russia AD investigations, as well as the concurrent PRC CVD investigation.

Filing Requirements

All submissions to the Department must be filed electronically using Enforcement and Compliance's Antidumping Countervailing Duty Centralized Electronic Service System (IA ACCESS).[7] An electronically filed document must be received successfully in its entirety by 5:00 p.m. on the date of the applicable deadline. Documents excepted from the electronic submission requirements must be filed manually (*i.e.,* in paper form) with the APO/Dockets Unit of Enforcement and Compliance, Room 1870, U.S. Department of Commerce, 14th Street and Constitution Avenue NW., Washington, DC 20230, and stamped with the date and time of receipt by the applicable deadline.

Comments on Product Characteristics for Antidumping Duty Questionnaires

The Department requests comments from interested parties regarding the appropriate physical characteristics of GOES to be reported in response to the Department's AD questionnaires. This information will be used to identify the key physical characteristics of the subject merchandise in order to report the relevant factors and costs of production (COPs) accurately as well as to develop appropriate product-comparison criteria.

Interested parties may provide any information or comments that they feel are relevant to the development of an accurate list of physical characteristics. Specifically, they may provide comments as to which characteristics are appropriate to use as: (1) General product characteristics and (2) product-comparison criteria. We note that it is not always appropriate to use all product characteristics as product-comparison criteria. We base product-comparison criteria on meaningful commercial differences among products. In other words, while there may be some physical product characteristics utilized by manufacturers to describe GOES, it may be that only a select few product characteristics take into account commercially-meaningful physical characteristics. In addition, interested parties may comment on the order in which the physical characteristics should be used in matching products. Generally, the Department attempts to list the most important physical characteristics first and the least important characteristics last.

In order to consider the suggestions of interested parties in developing and issuing the AD questionnaires, we must receive comments on product characteristics by November 13, 2013. Rebuttal comments must be received by November 20, 2013. All comments and submissions to the Department must be filed electronically using IA ACCESS, as referenced above.

Tolling of Deadlines

As explained in the memorandum from the Assistant Secretary for Enforcement and Compliance, the Department has exercised its discretion to toll deadlines for the duration of the closure of the Federal Government from October 1, through October 16, 2013.[8] Therefore, all deadlines in these investigations have been tolled by 16 days. If the new deadline falls on a non-business day, in accordance with the Department's practice, the deadline will become the next business day. The revised deadline for the initiation of these investigations is October 24, 2013.

Determination of Industry Support for the Petitions

Section 732(b)(1) of the Act requires that a petition be filed on behalf of the domestic industry. Section 732(c)(4)(A) of the Act provides that a petition meets this requirement if the domestic producers or workers who support the petition account for: (i) At least 25 percent of the total production of the domestic like product; and (ii) more than 50 percent of the production of the domestic like product produced by that portion of the industry expressing support for, or opposition to, the petition. Moreover, section 732(c)(4)(D) of the Act provides that, if the petition does not establish support of domestic producers or workers accounting for more than 50 percent of the total production of the domestic like product, the Department shall: (i) Poll the industry or rely on other information in order to determine if there is support for the petition, as required by subparagraph (A); or (ii) determine industry support using a statistically valid sampling method to poll the industry.

Section 771(4)(A) of the Act defines the term ''industry'' as the producers as a whole of a domestic like product. Thus, to determine whether a petition has the requisite industry support, the statute directs the Department to look to producers and workers who produce the domestic like product. The International Trade Commission (ITC), which is responsible for determining whether ''the domestic industry'' has been injured, must also determine what constitutes a domestic like product in order to define the industry. While both the Department and the ITC must apply the same statutory definition regarding the domestic like product,[9] they do so for different purposes and pursuant to a separate and distinct authority. In addition, the Department's determination is subject to limitations of time and information. Although this may result in different definitions of the like product, such differences do not render the decision of either agency contrary to law.[10]

Section 771(10) of the Act defines the term ''domestic like product'' as ''a product which is like, or in the absence of like, most similar in characteristics and uses with, the article subject to an investigation under this title.'' Thus, the reference point from which the domestic like product analysis begins is ''the article subject to an investigation'' (*i.e.,* the class or kind of merchandise to be investigated, which normally will be the scope as defined in the petition).

With regard to the domestic like product, the petitioners do not offer a definition of the domestic like product distinct from the scope of the investigations. Based on our analysis of the information submitted on the record, we have determined that GOES, as defined in the scope of the investigations, constitutes a single domestic like product and we have analyzed industry support in terms of that domestic like product.[11]

[7] *See Antidumping and Countervailing Duty Proceedings: Electronic Filing Procedures; Administrative Protective Order Procedures,* 76 FR 39263 (July 6, 2011) for details of the Department's electronic filing requirements, which went into effect on August 5, 2011. Information on help using IA ACCESS can be found at *https://iaaccess.trade.gov/help.aspx* and a handbook can be found at *https://iaaccess.trade.gov/help/Handbook%20on%20Electronic%20Filling%20Procedures.pdf.*

[8] *See* Memorandum for the Record from Paul Piquado, Assistant Secretary for Enforcement and Compliance, ''Deadlines Affected by the Shutdown of the Federal Government'' dated October 18, 2013.

[9] *See* section 771(10) of the Act.

[10] *See USEC, Inc.* v. *United States,* 132 F. Supp. 2d 1, 8 (CIT 2001) (citing *Algoma Steel Corp., Ltd.* v. *United States,* 688 F. Supp. 639, 644 (CIT 1988), *aff'd* 865 F.2d 240 (Fed. Cir. 1989)).

[11] For a discussion of the domestic like product analysis in this case, see Antidumping Duty Investigation Initiation Checklist: Grain-Oriented Electrical Steel from the People's Republic of China (PRC AD Initiation Checklist), at Attachment II, Analysis of Industry Support for the Petitions Covering Grain-Oriented Electrical Steel from the People's Republic of China, Czech Republic,

In determining whether the petitioners have standing under section 732(c)(4)(A) of the Act, we considered the industry support data contained in the Petitions with reference to the domestic like product as defined in the ''Scope of the Investigations'' in Appendix I of this notice. To establish industry support, the petitioners provided their own production of the domestic like product in 2012.[12] The petitioners state that there are no other known producers of GOES in the United States; therefore, the Petitions are supported by 100 percent of the U.S. industry.[13]

Our review of the data provided in the Petitions and other information readily available to the Department indicates that the petitioners have met the statutory criteria for industry support pursuant to section 732(c)(4) of the Act.[14] First, the Petitions establish support from domestic producers (or workers) accounting for more than 50 percent of the total production of the domestic like product and, as such, the Department is not required to take further action in order to evaluate industry support (*e.g.,* polling).[15] Second, the domestic producers (or workers) have met the statutory criteria for industry support under section 732(c)(4)(A)(i) of the Act because the domestic producers (or workers) who support the Petitions account for at least 25 percent of the total production of the domestic like product.[16] Finally, the domestic producers (or workers) have met the statutory criteria for industry support under section 732(c)(4)(A)(ii) of the Act because the domestic producers (or workers) who support the Petitions account for more than 50 percent of the production of the domestic like product produced by that portion of the industry expressing support for, or opposition to, the Petitions.[17] Accordingly, the Department determines that the Petitions were filed on behalf of the domestic industry within the meaning of section 732(b)(1) of the Act.

The Department finds that the petitioners filed the Petitions on behalf of the domestic industry because they are interested parties as defined in section 771(9)(C) and (D) of the Act and have demonstrated sufficient industry support with respect to the AD investigations that they are requesting the Department initiate.[18]

Allegations and Evidence of Material Injury and Causation

The petitioners allege that the U.S. industry producing the domestic like product is being materially injured, or threatened with material injury, by reason of the imports of the subject merchandise sold at less than normal value (NV). In addition, the petitioners allege that subject imports exceed the negligibility threshold provided for under section 771(24)(A) of the Act.[19]

The petitioners contend that the industry's injured condition is illustrated by reduced market share; underselling and price depression or suppression; lost sales and revenues; decline in production, capacity utilization, and shipments; reduced employment variables; and decline in financial performance.[20] We have assessed the allegations and supporting evidence regarding material injury, threat of material injury, and causation, and we have determined that these allegations are properly supported by adequate evidence and meet the statutory requirements for initiation.[21]

Allegations of Sales at Less Than Fair Value

The following is a description of the allegations of sales at less than fair value upon which the Department based its decision to initiate AD investigations of imports of GOES from the Czech Republic, Germany, Japan, Korea, Poland, the PRC, and Russia. The sources of data for the deductions and adjustments relating to U.S. price and NV are discussed in greater detail in the country-specific initiation checklists.

Export Price

For the Czech Republic, Japan, Korea, Poland, and Russia, the petitioners based U.S. price on offers for sales of GOES from producers of subject merchandise produced in, and exported from, the subject country. The petitioners made deductions from U.S. price for movement expenses consistent with the delivery terms. For Japan and Korea, the petitioners also made deductions from U.S. price for trader markups when traders made the offers for sale; these deductions were estimated based on the financial statements of independent steel traders.[22] The petitioners made no other adjustments to U.S. price.[23]

Constructed Export Price

For Germany, Japan, and the PRC, the petitioners calculated constructed export price (CEP) based on offers for sales of GOES from producers of subject merchandise produced in, and exported from, the subject country. The petitioners classified these offers as CEP transactions based on research showing the majority of imports from these producers were facilitated by their U.S. affiliates. The petitioners made deductions from U.S. price for movement expenses, consistent with the delivery terms. The petitioners also deducted U.S. indirect selling expenses estimated using the financial statements of an independent steel trader (for Germany, Japan, and the PRC) and imputed credit expenses (for Germany).

Germany, Japan, the Republic of Korea, Poland, and the Russian Federation (Attachment II); Antidumping Duty Investigation Initiation Checklist: Grain-Oriented Electrical Steel from Czech Republic (Czech Republic Initiation Checklist), at Attachment II; Antidumping Duty Investigation Initiation Checklist: Grain-Oriented Electrical Steel from Germany (Germany Initiation Checklist), at Attachment II; Antidumping Duty Investigation Initiation Checklist: Grain-Oriented Electrical Steel from Japan (Japan Initiation Checklist), at Attachment II; Antidumping Duty Investigation Initiation Checklist: Grain-Oriented Electrical Steel from the Republic of Korea (Korea Initiation Checklist), at Attachment II; Antidumping Duty Investigation Initiation Checklist: Grain-Oriented Electrical Steel from Poland (Poland Initiation Checklist), at Attachment II; and Antidumping Duty Investigation Initiation Checklist: Grain-Oriented Electrical Steel from the Russian Federation (Russia Initiation Checklist), at Attachment II. These checklists are dated concurrently with this notice and are on file electronically via IA ACCESS. Access to documents filed via IA ACCESS is also available in the Central Records Unit (CRU), Room 7046 of the main Department of Commerce building.

[12] *See* Volume I of the Petitions, at 4.

[13] *Id.,* at 1–3.

[14] *See* PRC AD Initiation Checklist, Czech Republic Initiation Checklist, Germany Initiation Checklist, Japan Initiation Checklist, Korea Initiation Checklist, Poland Initiation Checklist, and Russia Initiation Checklist, at Attachment II.

[15] *See* section 732(c)(4)(D) of the Act; *see also* PRC AD Initiation Checklist, Czech Republic Initiation Checklist, Germany Initiation Checklist, Japan Initiation Checklist, Korea Initiation Checklist, Poland Initiation Checklist, and Russia Initiation Checklist, at Attachment II.

[16] *See* PRC AD Initiation Checklist, Czech Republic Initiation Checklist, Germany Initiation Checklist, Japan Initiation Checklist, Korea Initiation Checklist, Poland Initiation Checklist, and Russia Initiation Checklist, at Attachment II.

[17] *Id.*

[18] *Id.*

[19] *See* Volume I of the Petitions, at 15–16 and Exhibit GENERAL-6.

[20] *See* Volume I of the Petitions, at 13–29 and Exhibits GENERAL-4 and GENERAL-6 through GENERAL-12.

[21] *See* PRC AD Initiation Checklist, Czech Republic Initiation Checklist, Germany Initiation Checklist, Japan Initiation Checklist, Korea Initiation Checklist, Poland Initiation Checklist, and Russia Initiation Checklist, at Attachment III, Analysis of Allegations and Evidence of Material Injury and Causation for the Petitions Covering Grain-Oriented Electrical Steel From the People's Republic of China, Czech Republic, Germany, Japan, the Republic of Korea, Poland, and the Russian Federation.

[22] *See* Japan Initiation Checklist; and Korea Initiation Checklist.

[23] *See* Czech Republic Checklist; Japan Initiation Checklist; Korea Initiation Checklist; Poland Initiation Checklist; and Russia Initiation Checklist.

The petitioners made no other adjustments to U.S. price.[24]

Normal Value

For the Czech Republic, Germany, Japan, Korea, Poland, and Russia, the petitioners based NV on price information from a producer of GOES in each of these countries that was sold in the subject country obtained through market research for the foreign like product. The petitioners made adjustments to NV for imputed credit expenses consistent with the sales terms. The petitioners also made a difference-in-merchandise adjustment to NV, where applicable, to account for differences between the home market and U.S. products (for Germany, Japan, Korea, and Russia). The petitioners made no other adjustments to NV.[25]

With respect to the PRC, the petitioners state that the Department has long treated the PRC as a non-market economy (NME) country.[26] In accordance with section 771(18)(C)(i) of the Act, the presumption of NME status remains in effect until revoked by the Department. The presumption of NME status for the PRC has not been revoked by the Department and, therefore, remains in effect for purposes of the initiation of this investigation. Accordingly, the NV of the product is appropriately based on factors of production (FOPs) valued in a surrogate market economy country, in accordance with section 773(c) of the Act. In the course of this investigation, all parties, including the public, will have the opportunity to provide relevant information related to the issues of the PRC's NME status and the granting of separate rates to individual exporters.

The petitioners claim that Thailand is an appropriate surrogate country because it is a market economy that is at a level of economic development comparable to that of the PRC, it is a significant producer of the merchandise under consideration, and the data for valuing FOPs are both available and reliable.[27] However, to calculate factory overhead, selling, general and administrative (SG&A) expenses, and profit, the petitioners used the financial statements of an Indian steel producer because, to the best of their knowledge, there are no publicly available, contemporaneous financial statements for any company in the Philippines, Indonesia, Ukraine, Thailand, Colombia, or South Africa that is a vertically-integrated producer (like the PRC GOES producers) of merchandise comparable to the subject merchandise and that shows a profit. The petitioners also examined countries not traditionally used as surrogates for the PRC (such as Malaysia) but are close to the PRC in terms of per-capita GNI and found no appropriate companies that did not have financial losses.[28]

Based on the information provided by the petitioners, we believe it is appropriate to use Thailand as a surrogate country for initiation purposes. We also believe that, for initiation purposes, it is appropriate to use the Indian financial statements as the surrogate source for financial ratios. Interested parties will have the opportunity to submit comments regarding surrogate country selection and will be provided an opportunity to submit publicly available information to value FOPs within 40 days before the scheduled date of the preliminary determination.[29]

Factors of Production

The petitioners based the FOPs for materials, labor, and energy on the consumption rates of the U.S. producers of GOES products. The petitioners assert that the experience of the U.S. producers is appropriate for comparison to producers in the PRC because the U.S. producers are comparable producers of the subject merchandise.[30]

Valuation of Raw Materials

The petitioners valued the FOPs for pig-iron (*i.e.,* the primary raw material used to produce subject merchandise) and iron and steel scrap using the average cost, insurance, and freight import value at the Thai port of entry using HTSUS subheadings 7201.10 and 7204.10, as published by Global Trade Atlas (GTA) for the period from January 2013 through June 2013.[31] The petitioners added to these values the average Thai brokerage and inland freight charges for importing the goods into Thailand, as published by the World Bank in *Doing Business 2013: Thailand.*[32]

The petitioners excluded all import values from countries previously determined by the Department to maintain broadly available, non-industry-specific export subsidies and from countries previously determined by the Department to be NME countries. In addition, in accordance with the Department's practice, the average import value excludes imports that were labeled as originating from an unidentified country.

Valuation of Labor

The petitioners valued labor using information published in a 2007 industrial survey by the Thailand National Statistics Office.[33] The survey provides a Thai wage rate for the manufacture of basic iron and steel in 2006, which the petitioners adjusted for inflation and then converted using the average exchange rate during the POI.[34] The petitioners then applied that resulting labor rate to the labor hours expended by U.S. GOES producers.[35]

Valuation of Energy

The petitioners valued electricity using a 2012 electricity rate in Thai baht per kilowatt hour, as reported by the Electricity Generating Authority of Thailand.[36] In accordance with the Department's policy not to adjust energy tariffs for inflation if those tariffs are likely still in force, the petitioners did not adjust this value for inflation.[37] After converting the Thai electricity rate into U.S. dollars, the petitioners multiplied that rate by the electricity consumption of U.S. producers of

[24] *See* PRC AD Initiation Checklist; Germany Initiation Checklist; and Japan Initiation Checklist.

[25] *See* Czech Republic Initiation Checklist; Germany Initiation Checklist; Japan Initiation Checklist; Korea Initiation Checklist; Poland Initiation Checklist; and Russia Initiation Checklist.

[26] *See* Volume II of the Petitions, at 1.

[27] *Id.,* at 2.

[28] *See* Volume II of the Petitions, at 6 and 8–10; *see also* Supplement to the PRC Petition, at 5–7.

[29] *See* 19 CFR 351.301(c)(3)(i). Note that this is the revised regulation published on April 1, 2013. *See http://www.gpo.gov/fdsys/pkg/CFR-2013-title19-vol3/html/CFR-2013-title19-vol3.htm.*

[30] *See* Volume II of the Petitions, at 6 and Exhibit C–13.

[31] *Id.,* at Exhibit C–14.

[32] *Id.,* at Exhibits C–9 and C–10.

[33] *Id.,* at 7 and Exhibit C–17.

[34] *Id.; see also* Volume II of the Petitions, at Exhibit C–3A.

[35] *Id.,* at Exhibit C–19.

[36] *Id.,* at 7 and Exhibit C–15.

[37] *Id.; see also Certain Kitchen Appliance Shelving and Racks From the People's Republic of China: Antidumping Duty Administrative Review, 2010–2011,* 77 FR 61385 (October 9, 2012), and accompanying Preliminary Decision Memorandum at 16, unchanged in *Certain Kitchen Appliance Shelving and Racks From the People's Republic of China; 2010–2011; Final Results of Antidumping Duty Administrative Review,* 78 FR 5414 (January 25, 2013); *Certain Activated Carbon From the People's Republic of China: Final Results and Partial Rescission of Second Antidumping Duty Administrative Review,* 75 FR 70208 (November 17, 2010), and accompanying Issues and Decision Memorandum at Comment 4; and *Certain Oil Country Tubular Goods From the People's Republic of China: Notice of Preliminary Determination of Sales at Less Than Fair Value, Affirmative Preliminary Determination of Critical Circumstances and Postponement of Final Determination,* 74 FR 59117 (November 17, 2009), unchanged in *Certain Oil Country Tubular Goods From the People's Republic of China: Final Determination of Sales at Less Than Fair Value, Affirmative Final Determination of Critical Circumstances and Final Determination of Targeted Dumping,* 75 FR 20335 (April 19, 2010).

GOES, in order to obtain an electricity cost per metric ton of output.[38]

The petitioners valued natural gas using publicly available Thai import data obtained from GTA in U.S. dollars for the POI.[39] To convert the unit of measurement from kilograms to cubic feet, the petitioners used universal conversion factors published by Chemlink Pty Ltd.[40] Finally, the petitioners applied the gas rate obtained to the volume of natural gas consumed by U.S. producers to obtain the natural gas surrogate cost per metric ton of output.[41]

Valuation of Factory Overhead, Selling, General and Administrative Expenses, and Profit

The petitioners calculated surrogate financial ratios (*i.e.,* factory overhead, selling, general and administrative (SG&A) expenses, and profit) using the 2012–2013 unconsolidated financial statements of Tata Steel, a vertically-integrated Indian producer of a wide variety of steel products.[42] The petitioners assert that use of these financial statements is appropriate because there was limited access to other publicly-available financial statements of a vertically-integrated steel company which manufactured comparable merchandise and which was also profitable.[43]

Sales Below Cost Allegations

For the Czech Republic, Germany, Japan, Korea, Poland, and Russia, the petitioners provided information demonstrating reasonable grounds to believe or suspect that sales of GOES in the respective home markets were made at prices below the fully-absorbed COP, within the meaning of section 773(b) of the Act, and requested that the Department conduct country-wide sales-below-cost investigations. The Statement of Administrative Action (SAA), submitted to the Congress in connection with the interpretation and application of the Uruguay Round Agreements Act, states that an allegation of sales below COP need not be specific to individual exporters or producers.[44] The SAA states that ''Commerce will consider allegations of below-cost sales in the aggregate for a foreign country, just as Commerce currently considers allegations of sales at less than fair value on a country-wide basis for purposes of initiating an antidumping investigation.'' [45]

Further, the SAA provides that section 773(b)(2)(A) of the Act retains the requirement that the Department have ''reasonable grounds to believe or suspect'' that below-cost sales have occurred before initiating such an investigation. Reasonable grounds exist when an interested party provides specific factual information on costs and prices, observed or constructed, indicating that sales in the foreign market in question are at below-cost prices.[46]

Cost of Production

Pursuant to section 773(b)(3) of the Act, COP consists of the cost of manufacturing (COM); SG&A expenses; financial expenses; and packing expenses. The petitioners calculated COM based on the petitioners' experience adjusted for known differences between their industry in the United States and the industries of the respective country (*i.e.,* the Czech Republic, Germany, Japan, Korea, Poland, and Russia), during the proposed POI.[47] Using publicly-available data to account for price differences, the petitioners multiplied their usage quantities by the submitted value of the inputs used to manufacture GOES in each country.

To determine factory overhead, SG&A, and financial expense rates, the petitioners relied on financial statements of producers of comparable merchandise operating in the respective foreign country.[48]

Based upon a comparison of the prices of the foreign like product in the home market to the calculated COP of the most comparable product, we find reasonable grounds to believe or suspect that sales of the foreign like products were made at prices that are below the COP, within the meaning of section 773(b)(2)(A)(i) of the Act. Accordingly, the Department is initiating country-wide cost investigations on sales of GOES from the Czech Republic, Germany, Japan, Korea, Poland, and Russia.

Normal Value Based on Constructed Value

For the Czech Republic, Germany, Japan, Korea, Poland, and Russia, because they alleged sales below cost, pursuant to sections 773(a)(4), 773(b), and 773(e) of the Act, the petitioners calculated NV based on constructed value (CV). The petitioners calculated CV using the same average COM, SG&A, financial expense, and packing figures used to compute the COPs. The petitioners relied on the same financial statements used as the basis for the factory overhead, SG&A, and financial expense rates to calculate the profit rates.[49]

Fair Value Comparisons

Based on the data provided by the petitioners, there is reason to believe that imports of GOES from the PRC, the Czech Republic, Germany, Japan, Korea, Poland, and Russia are being, or are likely to be, sold in the United States at less than fair value. Based on comparisons of export price or CEP to NV, in accordance with section 773(a)(1) of the Act, the estimated dumping margins for GOES from: (1) The Czech Republic range from 68.46 percent to 235.50 percent; [50] (2) Germany range from 38.54 percent to 241.91 percent; [51] (3) Japan range from 44.95 percent to 172.30 percent; [52] (4) Korea range from 49.51 percent to 257.61 percent; [53] (5) Poland range from 56.69 percent to 99.51 percent; [54] and (6) Russia range from 43.52 percent to 119.88 percent.[55] Based on a comparison of CEP to NV, in accordance with section 773(c) of the Act, the estimated dumping margin for GOES from the PRC is 159.21 percent.[56]

Initiation of Antidumping Duty Investigations

Based upon the examination of the Petitions on GOES from the PRC, the Czech Republic, Germany, Japan, Korea, Poland, and Russia, we find that the Petitions meet the requirements of section 732 of the Act. Therefore, we are initiating AD investigations to determine whether imports of GOES from the PRC, the Czech Republic, Germany, Japan, Korea, Poland, and Russia are being, or are likely to be, sold in the United States at less than fair value. In accordance with section 733(b)(1)(A) of the Act and 19 CFR 351.205(b)(1), unless postponed, we will

[38] *See* Volume II of the Petitions, at 7 and Exhibit AD–C–19.

[39] *Id.,* at 7.

[40] *Id.,* at 7 and Exhibit C–16.

[41] *Id.,* at 7 and Exhibit C–19.

[42] *Id.,* at 8–9 and Exhibit C–18.

[43] *Id.; see also* Supplement to the PRC Petition, at 6–7.

[44] *See* SAA, H.R. Doc. No. 103–316, Vol. 1 (1994), at 833, *reprinted in* 1994 U.S.C.C.A.N. 3773.

[45] *Id.*

[46] *Id.*

[47] *See* Czech Republic Initiation Checklist; Germany Initiation Checklist; Japan Initiation Checklist; Korea Initiation Checklist; Poland Initiation Checklist; and Russia Initiation Checklist.

[48] *Id.*

[49] *See* Czech Republic Initiation Checklist; Germany Initiation Checklist; Japan Initiation Checklist; Korea Initiation Checklist; Poland Initiation Checklist; and Russia Initiation Checklist.

[50] *See* Czech Republic Initiation Checklist.

[51] *See* Germany Initiation Checklist.

[52] *See* Japan Initiation Checklist.

[53] *See* Korea Initiation Checklist.

[54] *See* Poland Initiation Checklist.

[55] *See* Russia Initiation Checklist.

[56] *See* PRC AD Initiation Checklist.

make our preliminary determinations no later than 140 days after the date of this initiation.

Respondent Selection

Although the Department normally relies on import data from U.S. Customs and Border Protection to select a limited number of producers/exporters for individual examination in AD investigations, if appropriate, these Petitions name only one company as a producer/exporter of GOES in the Czech Republic: ArcelorMittal Frydek-Mistek A.S.; one company as a producer/exporter of GOES in Germany: ThyssenKrupp Electrical Steel GmbH; one company as a producer/exporter of GOES in Korea: POSCO; one company as a producer/exporter of GOES in Poland: Stalprodukt S.A.; one company as a producer/exporter of GOES in Russia: Novolipetsk Steel; and two companies as producers/exporters of GOES in Japan: JFE Steel Corporation and Nippon Steel & Sumitomo Metal Corporation.[57] Furthermore, we currently know of no additional producers/exporters of subject merchandise from these countries. Accordingly, the Department intends to examine all known producers/exporters in these investigations (*i.e.,* the companies cited above). We invite interested parties to comment on this issue. Parties wishing to comment must do so within seven days of the publication of this notice in the **Federal Register** for the Czech Republic, Germany, Korea, Poland, Russia, and Japan.

With respect to the PRC, in accordance with our standard practice for respondent selection for NME countries, we intend to issue quantity and value questionnaires to each potential respondent and base respondent selection on the responses received. In addition, the Department will post the quantity and value questionnaire along with the filing instructions on the Enforcement and Compliance Web site (*http://enforcement.trade.gov/ia-highlights-and-news.html*). Exporters and producers of GOES from the PRC that do not receive quantity and value questionnaires via mail may still submit a quantity and value response and can obtain a copy from the Enforcement and Compliance Web site. The quantity and value questionnaire must be submitted by all PRC producers/exporters no later than November 13, 2013. All quantity and value questionnaires must be filed electronically using IA ACCESS.

Separate Rates

In order to obtain separate rate status in an NME investigation, exporters and producers must submit a separate rate status application.[58] The specific requirements for submitting the separate rate application in the PRC investigation are outlined in detail in the application itself, which will be available on the Department's Web site at *http://enforcement.trade.gov/ia/ia-highlights-and-news.html* on the date of publication of this initiation notice in the **Federal Register**. The separate rate application will be due 60 days after publication of this initiation notice. For exporters and producers who submit a separate rate status application and have been selected as mandatory respondents, these exporters and producers will no longer be eligible for consideration for separate rate status unless they respond to all parts of the questionnaire as mandatory respondents. The Department requires that PRC respondents submit a response to both the quantity and value questionnaire and the separate rate application by their respective deadlines in order to receive consideration for separate rate status.

Use of Combination Rates

The Department will calculate combination rates for certain respondents that are eligible for a separate rate in an NME investigation. The Separate Rates and Combination Rates Bulletin states:

{w}hile continuing the practice of assigning separate rates only to exporters, all separate rates that the Department will now assign in its NME Investigation will be specific to those producers that supplied the exporter during the period of investigation. Note, however, that one rate is calculated for the exporter and all of the producers which supplied subject merchandise to it during the period of investigation. This practice applies both to mandatory respondents receiving an individually calculated separate rate as well as the pool of non-investigated firms receiving the weighted-average of the individually calculated rates. This practice is referred to as the application of ''combination rates'' because such rates apply to specific combinations of exporters and one or more producers. The cash-deposit rate assigned to an exporter will apply only to merchandise both exported by the firm in question *and* produced by a firm that supplied the exporter during the period of investigation.[59]

Distribution of Copies of the Petitions

In accordance with section 732(b)(3)(A) of the Act and 19 CFR 351.202(f), copies of the public version of the Petitions have been provided to the Governments of the Czech Republic, Germany, Japan, Korea, Poland, the PRC, and Russia via IA ACCESS. To the extent practicable, we will attempt to provide a copy of the public version of the Petitions to each known exporter (as named in the Petitions), as provided under 19 CFR 351.203(c)(2).

Meeting With the Government of Korea

Pursuant to a request by the Government of Korea, on October 22, 2013, Department officials met with Korean Government officials to discuss the status of the Department's consideration of the petition and industry support, as provided under section 732(b)(3)(B) of the Act.

ITC Notification

We have notified the ITC of our initiation, as required by section 732(d) of the Act.

Preliminary Determinations by the ITC

The ITC will preliminarily determine no later than November 20, 2013, whether there is a reasonable indication that imports of GOES from the Czech Republic, Germany, Japan, Korea, Poland, the PRC, and Russia are materially injuring, or threatening material injury to, a U.S. industry. A negative ITC determination for any country will result in the investigation being terminated with respect to that country; otherwise, these investigations will proceed according to statutory and regulatory time limits.

[57] *See* Volume I of the Petitions, at Exhibit GENERAL–3. The petitioners also name additional companies in Japan, Korea, and Russia which appear to be non-producing exporters or trading companies (*i.e.,* Metal One Corporation in Japan, Hyundai Corporation in Korea, and PJSC Ashinskiy Metallurgical Works in Russia). *Id.* In a letter dated October 23, 2013, the petitioners clarified their understanding of the commercial nature of exports by these companies. Specifically, the petitioners indicated that GOES is a highly use-dependent product, the demand for which is dependent on the unique design and engineering specifications of each transformer in which it is incorporated. Thus, the petitioners stated that, to the best of their knowledge, the foreign producers listed in the Petitions have knowledge of the ultimate destination of their sales of GOES. Based on this information, at this time we intend to review only the identified producers as respondents. If we receive information during the specified comment period below which indicates that the producers do not, in fact, know that certain of the merchandise sold to the trading companies/exporters was destined for the United States, the Department may consider examining these trading companies/exporters as additional respondents at a later date.

[58] *See* Policy Bulletin 05.1: Separate-Rates Practice and Application of Combination Rates in Antidumping Investigation involving Non-Market Economy Countries (April 5, 2005) (Separate Rates and Combination Rates Bulletin), available on the Department's Web site at *http://enforcement.trade.gov/policy/bull05-1.pdf.*

[59] *See* Separate Rates and Combination Rates Bulletin at 6 (emphasis added).

Submission of Factual Information

On April 10, 2013, the Department published *Definition of Factual Information and Time Limits for Submission of Factual Information: Final Rule,* 78 FR 21246 (April 10, 2013), which modified two regulations related to AD and CVD proceedings: The definition of factual information (19 CFR 351.102(b)(21)), and the time limits for the submission of factual information (19 CFR 351.301). The final rule identifies five categories of factual information in 19 CFR 351.102(b)(21), which are summarized as follows: (i) Evidence submitted in response to questionnaires; (ii) evidence submitted in support of allegations; (iii) publicly available information to value factors under 19 CFR 351.408(c) or to measure the adequacy of remuneration under 19 CFR 351.511(a)(2); (iv) evidence placed on the record by the Department; and (v) evidence other than factual information described in (i)–(iv). The final rule requires any party, when submitting factual information, to specify under which subsection of 19 CFR 351.102(b)(21) the information is being submitted and, if the information is submitted to rebut, clarify, or correct factual information already on the record, to provide an explanation identifying the information already on the record that the factual information seeks to rebut, clarify, or correct. The final rule also modified 19 CFR 351.301 so that, rather than providing general time limits, there are specific time limits based on the type of factual information being submitted. These modifications are effective for all proceeding segments initiated on or after May 10, 2013, and thus are applicable to these investigations. Please review the final rule, available at *http://enforcement.trade.gov/frn/2013/1304frn/2013-08227.txt,* prior to submitting factual information in these investigations.

Certification Requirements

Any party submitting factual information in an AD or CVD proceeding must certify to the accuracy and completeness of that information.[60] Parties are hereby reminded that revised certification requirements are in effect for company/government officials, as well as their representatives. Investigations initiated on the basis of petitions filed on or after August 16, 2013, and other segments of any AD or CVD proceedings initiated on or after August 16, 2013, should use the formats for the revised certifications provided at the end of the *Final Rule.*[61] The Department intends to reject factual submissions if the submitting party does not comply with applicable revised certification requirements.

Extension of Time Limits

On September 20, 2013, the Department published *Extension of Time Limits, Final Rule,* 78 FR 57790 (September 20, 2013), which modified one regulation related to AD and CVD proceedings regarding the extension of time limits for submissions in such proceedings (19 CFR 351.302(c)). These modifications are effective for all segments initiated on or after October 21, 2013, and thus are applicable to these investigations. Please review the final rule, available at *http://www.gpo.gov/fdsys/pkg/FR-2013-09-20/html/2013-22853.htm* prior to requesting an extension.

Notification to Interested Parties

Interested parties must submit applications for disclosure under APO in accordance with 19 CFR 351.305. On January 22, 2008, the Department published *Antidumping and Countervailing Duty Proceedings: Documents Submission Procedures; APO Procedures,* 73 FR 3634 (January 22, 2008). Parties wishing to participate in these investigations should ensure that they meet the requirements of these procedures (*e.g.,* the filing of letters of appearance as discussed at 19 CFR 351.103(d)).

This notice is issued and published pursuant to section 777(i) of the Act.

Dated: October 24, 2013.

Paul Piquado,

Assistant Secretary for Enforcement and Compliance.

Appendix I

Scope of the Investigations

The scope of these investigations covers grain-oriented silicon electrical steel (GOES). GOES is a flat-rolled alloy steel product containing by weight at least 0.6 percent but not more than 6 percent of silicon, not more than 0.08 percent of carbon, not more than 1.0 percent of aluminum, and no other element in an amount that would give the steel the characteristics of another alloy steel, in coils or in straight lengths. The GOES that is subject to these investigations is currently classifiable under subheadings 7225.11.0000, 7226.11.1000, 7226.11.9030, and 7226.11.9060 of the Harmonized Tariff Schedule of the United States (HTSUS). Although the HTSUS subheadings are provided for convenience and customs purposes, the written description of the scope of these investigations is dispositive.

[FR Doc. 2013–25805 Filed 10–30–13; 8:45 am]

BILLING CODE 3510–DS–P

[60] *See* section 782(b) of the Act.

[61] *See Certification of Factual Information To Import Administration During Antidumping and Countervailing Duty Proceedings,* 78 FR 42678 (July 17, 2013) (*Final Rule*); *see also* frequently asked questions regarding the *Final Rule,* available at *http://enforcement.trade.gov/tlei/notices/factual_info_final_rule_FAQ_07172013.pdf.*

DEPARTMENT OF COMMERCE

International Trade Administration

[A–570–900]

Diamond Sawblades and Parts Thereof From the People's Republic of China: Notice of Court Decision Not in Harmony With Final Determination of Sales at Less Than Fair Value and Notice of Amended Final Determination of Sales at Less Than Fair Value Pursuant to Court Decision

AGENCY: Enforcement and Compliance, formerly Import Administration, International Trade Administration, Department of Commerce.

SUMMARY: On October 11, 2013, the United States Court of International Trade (''Court'' or ''CIT'') issued its final judgment in *Advanced Technology & Materials* v. *United States,*[1] sustaining the Department of Commerce's (Department) *Second Remand Results.*[2] Consistent with the decision of the United States Court of Appeals for the Federal Circuit (''Federal Circuit'') in *Timken Co.,* v. *United States,* 893 F.2d 337 (Fed. Cir. 1990) (''*Timken*''), as clarified by *Diamond Sawblades Mfrs. Coalition* v. *United States,* 626 F.3d 1374 (Fed. Cir. 2010) (''*Diamond Sawblades*''), the Department is notifying the public that the final CIT judgment in this case is not in harmony with the Department's *Final Determination*[3] and is amending the *Final Determination* with respect to the AT&M Entity's[4] eligibility for a separate

[1] *Advanced Technology & Materials* v. *United States,* Court No. 09–511, Slip Op. 13–129 (CIT October 11, 2013) (''*AT&M* v. *United States*'').

[2] *See Final Results of Redetermination Pursuant to Advanced Technology & Materials Co., Ltd., Beijing Gang Yan Diamond Products Company, and Gang Yan Diamond Products, Inc. with Bosun Tools Group Co. Ltd.* v. *United States and Diamond Sawblades Manufacturers Coalition, Weihai Xiangguang Mechanical Industrial Co., Ltd., and Qingdao Shinhan Diamond Industrial Co., Ltd.,* Consol. Court No. 09–00511, Slip op. 12–147 (CIT2012), dated May 6, 2013 (''*Second Remand Results*'').

[3] *See Final Determination of Sales at Less Than Fair Value and Final Partial Affirmative Determination of Critical Circumstances: Diamond Sawblades and Parts Thereof from the People's Republic of China,* 71 FR 29303 (May 22, 2006) (''*Final Determination*'').

[4] The AT&M entity includes: Advanced Technology & Materials Co., Ltd. (''AT&M''), Beijing Gang Yan Diamond Products Company (''BGY''),

Continued

rate in the less-than-fair-value investigation.

DATES: *Effective Date:* October 21, 2013.

FOR FURTHER INFORMATION CONTACT: Matthew Renkey, AD/CVD Operations, Office V, Enforcement and Compliance, International Trade Administration, Department of Commerce, 14th Street and Constitution Avenue NW., Washington, DC 20230; telephone: (202) 482–2312.

SUPPLEMENTARY INFORMATION: On May 6, 2013, the Department filed the *Second Remand Results,* in which the Department determined that the AT&M Entity was not entitled to a rate separate from that of the People's Republic of China (''PRC'')-wide entity. On October 11, 2013, the Court sustained the Department's *Second Remand Results.*[5]

Timken Notice

In its decision in *Timken,* 893 F.2d at 341, as clarified by *Diamond Sawblades,* the Federal Circuit has held that, pursuant to section 516A(e) of the Tariff Act of 1930, as amended (''Act''), the Department must publish a notice of a court decision not ''in harmony'' with a Department determination, and must suspend liquidation of entries pending a ''conclusive'' court decision. The Court's October 11, 2013, judgment constitutes a final decision of the Court that is not in harmony with the Department's *Final Determination.* This notice is published in fulfillment of the publication requirement of *Timken.* Accordingly, the Department will continue the suspension of liquidation of the subject merchandise pending the expiration of the period of appeal, or if appealed, pending a final and conclusive court decision. Since the *Final Determination,* the Department has established a new cash deposit rate for the AT&M entity.[6] Therefore, this amended final determination does not change the AT&M entity's cash deposit rate.

Amended Final Determination

Because there is now a final court decision, we are amending the *Final Determination* with respect to the AT&M entity's separate rate status. This notice is issued and published in accordance with sections 516A(e)(1), 735, and 777(i)(1) of the Act.

Dated: October 23, 2013

Paul Piquado,

Assistant Secretary for Enforcement and Compliance.

[FR Doc. 2013–26006 Filed 10–30–13; 8:45 am]

BILLING CODE 3510–DS–P

and Yichang HXF Circular Saw Industrial Co., Ltd. (''Yichang HXF'').

[5] *See AT&M* v. *United States.*

[6] *See Diamond Sawblades and Parts Thereof from the People's Republic of China: Final Results of Antidumping Duty Administrative Review; 2009–2010,* 78 FR 11143 (February 15, 2013).

DEPARTMENT OF COMMERCE

International Trade Administration

Request for Applicants for the Appointment to the United States-India CEO Forum

AGENCY: Global Markets, International Trade Administration, Department of Commerce.

ACTION: Notice.

SUMMARY: In 2005, the Governments of the United States and India established the U.S.-India CEO Forum. On February 10, 2012, we published in the **Federal Register** a ''Request for Applicants for the Appointment to the United States-India CEO Forum'' (FR Doc. 2012–3158), announcing membership opportunities for appointment as representatives to the U.S. Section of the Forum, and we appointed ten members to the U.S. Section of the Forum for a two-year term beginning on September 1, 2012. We are now soliciting additional applications for up to two openings from members of the private sector representing either the U.S. health care sector or the U.S. insurance industry sector. This notice supplements the notice of February 10, 2012, and announces membership opportunities for appointment as representatives to the U.S. Section of the Forum's private sector Committee to serve for the remainder of the current term which ends on August 31, 2014.

DATES: Applications should be received no later than 30 days after publication of this Notice.

ADDRESSES: Please send requests for consideration to Valerie Dees, Awinash Bawle, and Jed Diemond at the Office of South Asia, U.S. Department of Commerce, either by email at *valerie.dees@trade.gov, awinash.bawle@trade.gov,* and *jed.diemond@trade.gov* or by mail to U.S. Department of Commerce, 1401 Constitution Avenue NW., Room 2310, Washington, DC 20230.

FOR FURTHER INFORMATION CONTACT: Valerie Dees, Director, Office of South Asia, U.S. Department of Commerce, telephone: (202) 482–0477.

SUPPLEMENTARY INFORMATION: The U.S.-India CEO Forum, consisting of both private and public sector members, brings together leaders of the respective business communities of the United States and India to discuss issues of mutual interest, particularly ways to strengthen the economic and commercial ties between the two countries, and to communicate their joint recommendations to the U.S. and Indian governments. The Forum has U.S. and Indian co-chairs; the U.S. Deputy National Security Advisor for International Economic Affairs, together with the Deputy Chairman of the Planning Commission of India, co-chair the Forum. The Forum includes a Committee comprising private sector members. The Committee will be composed of two Sections, each consisting of 10–12 members from the private sector representing the views and interests of the private sector business community in the United States and India, respectively. Each government will appoint the members to its respective Section. The Committee will provide recommendations to the two governments and their senior officials that reflect private sector views, needs, and concerns about the creation of an environment in which their respective private sectors can partner, thrive, and enhance bilateral commercial ties to expand trade and economic links between the United States and India. The Committee will continue to build on the work done by the Committee to date, including the Forum's April 2008 and November 2010 reports.

On February 10, 2012, we published in the **Federal Register** a ''Request for Applicants for the Appointment to the United States-India CEO Forum'' (FR Doc. 2012–3158), announcing membership opportunities for appointment as representatives to the U.S. Section of the Forum. The application period closed on March 26, 2012, and we appointed ten members to the U.S. Section of the Forum for a two-year term beginning on September 1, 2012. We are now soliciting additional applications for up to two openings from members of the private sector representing either the U.S. health care sector or the U.S. insurance industry sector. This notice supplements the notice of February 10, 2012, and announces membership opportunities for appointment as representatives to the U.S. Section of the Forum's private sector Committee.

Candidates are currently being sought for membership on the U.S. Section of the Forum. Each candidate must be the Chief Executive Officer or President (or have a comparable level of responsibility) of a U.S.-owned or controlled company that is incorporated in and has its main headquarters located

in the United States and is currently doing business in both India and the United States. Each candidate also must be a U.S. citizen or otherwise legally authorized to work in the United States and be able to travel to India and locations in the United States to attend official Forum meetings as well as Section meetings on the U.S. side. In addition, the candidate may not be a registered foreign agent under the Foreign Agents Registration Act of 1938, as amended.

Evaluation of applications for membership in the U.S. Section by eligible individuals will be based on the following criteria:

- Representation of either the health care sector or insurance industry sector.
- A demonstrated commitment by the individual's company to the Indian market either through exports or investment.
- A demonstrated strong interest in India and its economic development.
- The ability to offer a broad perspective and business experience to the discussions.
- The ability to address cross-cutting issues that affect the entire business community.
- The ability to initiate and be responsible for activities in which the Forum will be active.

The evaluation of applications for membership in the U.S. Section will be undertaken by a committee of staff from multiple U.S. Government agencies. Members will be selected on the basis of who best will carry out the objectives of the Forum as stated in the last paragraph of the **SUPPLEMENTARY INFORMATION** caption above. The U.S. Section of the Committee should also include members who represent a diversity of geographic locations. To the extent possible, Section members also should represent a cross-section of small, medium, and large firms.

U.S. Section members will receive no compensation for their participation in Forum-related activities. Individual members will be responsible for all travel and related expenses associated with their participation in the Forum, including attendance at Committee and Section meetings. It is anticipated that the next Forum meeting will be held approximately in the first half of 2014. The U.S. and Indian Sections should be prepared to work together ahead of that time to prepare recommendations to the U.S. and Indian governments. Only appointed members may participate in official Forum meetings; substitutes and alternates will not be designated. Appointed members will serve for the remainder of the current two-year term, scheduled to expire on August 31, 2014, and will be eligible to apply for reappointment for a subsequent term. In the event of a vacancy after members of the U.S. Section are appointed, candidates not previously selected may be considered to fill the vacancy based on material submitted in response to this notice.

To be considered for membership in the U.S. Section, please submit the following information as instructed in the **DATES** and **ADDRESSES** captions above: Name and title of the individual requesting consideration; name and address of company's headquarters; location of incorporation; size of the company; size of company's export trade, investment, and nature of operations or interest in India; and a brief statement of why the candidate should be considered, including information about the candidate's ability to initiate and be responsible for activities in which the Forum will be active. All candidates will be notified of whether they have been selected.

Dated: October 25, 2013.

Valerie A. Dees,

Director of the Office of South Asia.

[FR Doc. 2013–25791 Filed 10–30–13; 8:45 am]

BILLING CODE 3510–FP–P

DEPARTMENT OF COMMERCE

National Oceanic and Atmospheric Administration

Proposed Information Collection; Comment Request; Atlantic Highly Migratory Species Release Reports

AGENCY: National Oceanic and Atmospheric Administration (NOAA), Commerce.

ACTION: Notice.

SUMMARY: The Department of Commerce, as part of its continuing effort to reduce paperwork and respondent burden, invites the general public and other Federal agencies to take this opportunity to comment on proposed and/or continuing information collections, as required by the Paperwork Reduction Act of 1995.

DATES: Written comments must be submitted on or before December 30, 2013.

ADDRESSES: Direct all written comments to Jennifer Jessup, Departmental Paperwork Clearance Officer, Department of Commerce, Room 6616, 14th and Constitution Avenue NW., Washington, DC 20230 (or via the Internet at *JJessup@doc.gov*).

FOR FURTHER INFORMATION CONTACT: Requests for additional information or copies of the information collection instrument and instructions should be directed to Peter Cooper at (301) 427–8503 or *Peter.Cooper@noaa.gov.*

SUPPLEMENTARY INFORMATION:

I. Abstract

This request is for an extension of a currently approved information collection.

Under the Magnuson-Stevens Fishery Conservation and Management Act (MSFMCA, 16 U.S.C. 1801 et seq.) the National Marine Fisheries Service (NMFS) is to ensure that conservation and management measures promote, to the extent practicable, implementation of scientific research programs that include the tagging and releasing of Atlantic highly migratory species (HMS). The currently approved information collection allows the public to submit volunteered geographic and biological information relating to HMS releases in order to populate an interactive Web site mapping tool. This Web page attracts visitors who are interested in Atlantic HMS and contains information and links to promote HMS tagging programs that the general public can support or become involved with. All submissions are voluntary. Information is used to raise awareness for releasing Atlantic HMS and HMS tagging programs, and is not used as representative results.

II. Method of Collection

Respondents may submit information via electronic form, email, fax, or mail.

III. Data

OMB Control Number: 0648–0628.

Form Number: None.

Type of Review: Regular submission (extension of a current information collection).

Affected Public: Individuals or households; businesses or other for-profit organizations; not-for-profit institutions; Federal government; and State, Local, or Tribal government.

Estimated Number of Respondents: 15.

Estimated Time per Response: 5 minutes.

Estimated Total Annual Burden Hours: 1.25 (1).

Estimated Total Annual Cost to Public: $0 in recordkeeping/reporting costs.

IV. Request for Comments

Comments are invited on: (a) Whether the proposed collection of information is necessary for the proper performance of the functions of the agency, including whether the information shall have practical utility; (b) the accuracy of the

agency's estimate of the burden (including hours and cost) of the proposed collection of information; (c) ways to enhance the quality, utility, and clarity of the information to be collected; and (d) ways to minimize the burden of the collection of information on respondents, including through the use of automated collection techniques or other forms of information technology.

Comments submitted in response to this notice will be summarized and/or included in the request for OMB approval of this information collection; they also will become a matter of public record.

Dated: October 25, 2013.

Gwellnar Banks,

Management Analyst, Office of the Chief Information Officer.

[FR Doc. 2013–25857 Filed 10–30–13; 8:45 am]

BILLING CODE 3510–22–P

DEPARTMENT OF COMMERCE

National Oceanic and Atmospheric Administration

RIN 0648–XC949

Western Pacific Fishery Management Council (WPFMC) Public Meetings

AGENCY: National Marine Fisheries Service (NMFS), National Oceanic and Atmospheric Administration (NOAA), Commerce.

ACTION: Notice of public informational scoping meetings on the Management of Bottomfish Fishery Resources within the Exclusive Economic Zone of the Mariana Islands.

SUMMARY: The Western Pacific Fisheries Management Council (Council) will convene public informational scoping meetings in Guam and Commonwealth of the Northern Mariana Islands (CNMI) to solicit comments on the management of the bottomfish fishery within the EEZ of the Mariana Islands. The scoping meeting will, among other things, describe the existing federal management regime for bottomfish species, examine the current performance of the fishery and consider the need for potential regulatory changes.

DATES: Public informational scoping meetings will be held in CNMI on November 18, 2013 and in Guam November 19, 2013. See **SUPPLEMENTARY INFORMATION** for specific dates, times and locations.

ADDRESSES: Written comments on this issue may be sent to Kitty M. Simonds, Executive Director, Western Pacific Fishery Management Council, 1164 Bishop St., Suite 1400, Honolulu, HI 96813.

Comments may be sent to the Council via facsimile (fax) at (808) 522–8226.

FOR FURTHER INFORMATION CONTACT: Kitty M. Simonds, Executive Director, WPFMC, (808) 522–8220.

SUPPLEMENTARY INFORMATION: Dates, Times, and Locations for Public Informational Scoping Meetings

1. Saipan, CNMI—Monday, November 18, 2013, from 6 p.m.–9 p.m. at the Northern Marianas College (NMC) Classroom D–1, and via video conference in Rota, CNMI at the NMC Video Teleconference (VTC) Room A2, and in Tinian, CNMI at the NMC VTC Room C.

2. Tumon, Guam—Tuesday, November 19, 2013, from 6 p.m.–9 p.m. at the Guam Hilton Hotel.

Special Accommodations

These meetings are physically accessible to people with disabilities. Requests for sign language interpretation or other auxiliary aids should be directed to Kitty M. Simonds, (808) 522–8220 (voice) or (808) 522–8226 (fax), at least 5 days prior to the meeting date.

Authority: 16 U.S.C. 1801 *et seq.*

Dated: October 28, 2013.

Tracey L. Thompson,

Acting Deputy Director, Office of Sustainable Fisheries, National Marine Fisheries Service.

[FR Doc. 2013–25946 Filed 10–30–13; 8:45 am]

BILLING CODE 3510–22–P

DEPARTMENT OF COMMERCE

National Oceanic and Atmospheric Administration

RIN 0648–XC951

North Pacific Fishery Management Council (NPFMC); Public Meetings

AGENCY: National Marine Fisheries Service (NMFS), National Oceanic and Atmospheric Administration (NOAA), Commerce.

ACTION: Notice of public meetings.

SUMMARY: The North Pacific Fishery Management Council's (Council) Gulf of Alaska (GOA) and Bering Sea/Aleutian Islands (BSAI) Groundfish Plan Teams will meet in Seattle, WA.

DATES: The meetings will be held November 18–22, 2013. The meetings will begin at 9 a.m., November 18, and continue through Friday November 22, 2013.

ADDRESSES: The meetings will be held at the Alaska Fisheries Science Center, 7600 Sand Point Way NE., Building 4, Observer Training Room 1055 (GOA Plan Team) and Traynor Room 2076 (BS/AI Plan Team), Seattle, WA.

Council address: North Pacific Fishery Management Council, 605 W. 4th Ave., Suite 306, Anchorage, AK 99501–2252.

FOR FURTHER INFORMATION CONTACT: Jane DiCosimo or Diana Stram, NPFMC; telephone: (907) 271–2809.

SUPPLEMENTARY INFORMATION: The Plan Teams will compile and review the annual Groundfish Stock Assessment and Fishery Evaluation (SAFE) reports, including the Economic Report, the Ecosystems Consideration Chapter, the stock assessments for BSAI and GOA groundfishes, and recommend final groundfish harvest specifications for 2014/15.

The Agenda is subject to change, and the latest version will be posted at *http://www.alaskafisheries.noaa.gov/npfmc/*

Although non-emergency issues not contained in this agenda may come before this group for discussion, in accordance with the Magnuson-Stevens Fishery Conservation and Management Act (Magnuson-Stevens Act), those issues may not be the subject of formal action during this meeting. Actions will be restricted to those issues specifically identified in this notice and any issues arising after publication of this notice that require emergency action under Section 305(c) of the Magnuson-Stevens Act, provided the public has been notified of the Council's intent to take final action to address the emergency.

Special Accommodations

These meetings are physically accessible to people with disabilities. Requests for sign language interpretation or other auxiliary aids should be directed to Gail Bendixen, (907) 271–2809, at least 5 working days prior to the meeting date.

Dated: October 28, 2013.

Tracey L. Thompson,

Acting Deputy Director, Office of Sustainable Fisheries, National Marine Fisheries Service.

[FR Doc. 2013–25947 Filed 10–30–13; 8:45 am]

BILLING CODE 3510–22–P

CONSUMER PRODUCT SAFETY COMMISSION

[Docket No. CPSC–2010–0041]

Collection of Information; Proposed Extension of Approval; Comment Request—Publicly Available Consumer Product Safety Information Database

AGENCY: Consumer Product Safety Commission.

ACTION: Notice.

SUMMARY: As required by the Paperwork Reduction Act of 1995 (PRA) (44 U.S.C. Chapter 35), the Consumer Product Safety Commission (CPSC or Commission) requests comments on a proposed extension of approval of a collection of information for the Publicly Available Consumer Product Safety Information Database. The Commission will consider all comments received in response to this notice before requesting an extension of approval of this collection of information from the Office of Management and Budget (OMB).

DATES: The Office of the Secretary must receive comments not later than December 2, 2013.

ADDRESSES: OMB recommends that written comments be faxed to the Office of Information and Regulatory Affairs, OMB, Attn: CPSC Desk Officer, FAX: 202–395–6974, or emailed to *oira_submission@omb.eop.gov.* All comments should be identified by Docket No. CPSC–2010–0041. In addition, written comments also should be submitted at *http://www.regulations.gov,* under Docket No. CPSC–2010–0041, or by mail/hand delivery/courier (for paper, disk, or CD–ROM submissions), preferably in five copies, to: Office of the Secretary, U.S. Consumer Product Safety Commission, Room 820, 4330 East West Highway, Bethesda, MD 20814; telephone (301) 504–7923. For access to the docket to read background documents or comments received, go to *http://www.regulations.gov.*

FOR FURTHER INFORMATION CONTACT: For further information contact: Robert H. Squibb, Consumer Product Safety Commission, 4330 East West Highway, Bethesda, MD 20814; (301) 504–7815, or by email to: *rsquibb@cpsc.gov.*

SUPPLEMENTARY INFORMATION: In the **Federal Register** of August 15, 2013 (78 FR 49730), the CPSC published a notice in accordance with provisions of the Paperwork Reduction Act of 1995 (44 U.S.C. Chapter 35). This notice announced CPSC's intention to seek extension of approval of a collection of information for a database on the safety of consumer products and other products and substances regulated by the Commission (Database), as required by section 212 of the Consumer Product Safety Improvement Act of 2008 (CPSIA).

Two comments were received in response to the August 15th notice. One commenter stated support for extension of the approval of the collection of information for the Database, citing the usefulness of the data collected to both the CPSC and to consumers. This commenter also suggested that the Database could be even more useful if CPSC would provide a link to any corrective action, fine, recall or safety alert involving a reported product. CPSC agrees that the links suggested by the commenter would add value to the Database. However, incorporating new features would require resources that are not currently available. CPSC will take the suggestion under advisement and consider such modifications if and when resources for modifications are available. Another commenter stated that CPSC does not help consumers. CPSC has no response to this comment because the comment is outside the scope of the inquiry regarding paperwork burdens associated with the requested collection of information.

By publication of this notice, the Commission announces that it has submitted to the Office of Management and Budget (OMB) a request for extension of approval of the collection of information for the Database without change.

A. Background

Section 212 of the Consumer Product Safety Improvement Act of 2008 (CPSIA) added section 6A to the Consumer Product Safety Act (CPSA) which requires the Consumer Product Safety Commission (CPSC or Commission) to establish and maintain a publicly available, searchable database on the safety of consumer products, and other products or substances regulated by the Commission (Database). Among other things, section 6A of the CPSA requires the Commission to collect reports of harm from the public for potential publication in the publicly available Database, and to collect and publish comments about reports of harm from manufacturers.

The Commission announced that a proposed collection of information in conjunction with the Database, called the Publicly Available Consumer Product Safety Information Database, had been submitted to OMB for review and clearance under 44 U.S.C. 3501–3520 in a proposed rule published on May 24, 2010 (75 FR 29156). The Commission issued a final rule on the Database on December 9, 2010 (75 FR 76832). The final rule interprets various statutory requirements in section 6A of the CPSA pertaining to the information to be included in the Database and also establishes provisions regarding submitting reports of harm; providing notice of reports of harm to manufacturers; publishing reports of harm and manufacturer comments in the Database; and dealing with confidential and materially inaccurate information.

OMB approved the collection of information for the Database under control number 3041–0146. OMB's most recent extension of approval will expire on January 31, 2014. The Commission now proposes to request an extension of approval of this collection of information.

B. Information Collected Through the Database

The primary purpose of this information collection is to populate the publicly searchable Database of consumer product safety information mandated by section 6A of the CPSA. There are four components to the information collection: Reports of harm, manufacturer comments, branding information, and the Small Batch Manufacturer Registry (SBMR).

Reports of Harm: Reports of harm communicate information regarding an injury, illness, or death, or any risk (as determined by the Commission) of injury, illness, or death, relating to the use of a consumer product. Reports can be submitted to the CPSC by consumers; local, State, or Federal government agencies; health care professionals; child service providers; public safety entities; and others. Reports may be submitted in one of three ways: Via the CPSC Web site (*www.SaferProducts.gov*), by telephone via a CPSC call center, or by email, fax, or mail using the incident report form (available for download or printing via the CPSC Web site). Reports may also originate as a free-form letter or email. Submitters must consent to inclusion of their report of harm in the publicly searchable Database.

Manufacturer Comments: A manufacturer or private labeler may submit a comment related to a report of harm if the report of harm identifies the manufacturer or private labeler and the CPSC transmits such report of harm to the manufacturer. Manufacturer comments may be submitted through the business portal, by email, mail, or fax. The business portal is a feature of the Database that allows manufacturers who register on the business portal to

receive reports of harm and comment on such reports through the business portal. Use of the business portal expedites the receipt of reports of harm and business response times.

A manufacturer may request that the Commission designate information in a report of harm as confidential. Such a request may be made using the business portal, by email, by mail, or by fax. Also, any person or entity reviewing a report of harm or manufacturer comment, either before or after publication in the Database, may request that the report or comment, or portions of the report or comment, be excluded from the Database because the report or comment contains materially inaccurate information. Such a request may be made by manufacturers using the business portal, by email, mail or fax, and may be submitted by anyone else by email, mail, or fax.

Branding Information: Using the business portal, registered businesses may voluntarily submit branding information to assist CPSC in correctly and timely routing reports of harm involving their products to them. Brand names may be licensed to another entity for use in labeling consumer products manufactured by that entity. CPSC's understanding of licensing arrangements for consumer products can help to give the correct manufacturer timely notification of a report of harm.

Small Batch Manufacturers Registry: The business portal also contains the SBMR, which is the online mechanism by which small batch manufacturers (as defined in the CPSA) can identify themselves to obtain relief from certain third party testing requirements for children's products. To register as a small batch manufacturer a business must attest that the company's income level and the number of units of the covered product manufactured for which relief is sought both fall within the statutory limits to receive relief from third party testing.

C. Estimated Burden

1. Estimated Annual Burden for Respondents

We estimate the burden of this collection of information as follows:

TABLE 1—ESTIMATED ANNUAL REPORTING BURDEN FOR REPORTS OF HARM

Collection type	Number of respondents	Response frequency [1]	Total annual responses	Minutes per response	Total burden, in hours [2]
Reports of Harm—submitted through web site	8,030	1.02	8,207	12	1,641
Reports of Harm—submitted by phone	3,749	1.00	3,749	10	625
Reports of Harm—submitted by mail, email, fax	904	6.71	6,067	20	2,022
Total	12,683		18,023		4,288

TABLE 2—ESTIMATED ANNUAL REPORTING BURDEN FOR MANUFACTURER SUBMISSIONS

Collection type	Number of respondents	Response frequency [1]	Total annual responses	Minutes per response	Total burden, in hours [2]
Manufacturer Comments—submitted through web site	624	8.20	5,117	116	9,893
Manufacturer Comments—submitted by mail, email, fax	132	1.25	165	146	402
Requests to Treat Information as Confidential—submitted through web site	11	1.27	14	15	4
Requests to Treat Information as Confidential—submitted by mail, email, fax	0	0	0	45	0
Requests to Treat Information as Materially Inaccurate—submitted through web site	231	2.46	568	438	4,146
Requests to Treat Information as Materially Inaccurate—submitted by mail, email, fax	83	1.25	104	468	811
Voluntary Brand Identification	545	2.25	1,227	10	205
Small Batch Manufacturer Identification	578	1	578	10	96
Total	2,204		7,773		15,557

Based on the data set forth in tables 1 and 2 above, the annual reporting cost is estimated to be $1,086,332. This estimate is based on the sum of two estimated figures for reports of harm and manufacturer submissions. The estimated number of respondents and responses are based on the actual responses received in FY 2012. We assume that the number of responses and respondents will be similar in future years.

Reports of Harm: Table 1 sets forth the data used to estimate the burden associated with submitting reports of harm. We had previously estimated the time associated with the electronic and telephone submission of reports of harm at 12 and 10 minutes respectively and so used those figures for present purposes as well. We estimate that the time associated with a paper or PDF form would be 20 minutes on average.

To estimate the costs for submitting reports of harm we multiplied the estimated total burden hours associated with reports of harm (1,641 hours + 625 hours + 2,022 hours = 4,288 hours) by an estimated total compensation for all workers in private industry of $29.13 per hour,[3] which results in an estimated cost of $124,909 (4,288 hours × $29.13 per hour = $124,909).

Manufacturer Submissions: Table 2 sets forth the data used to estimate the burden associated with manufacturer submissions to the Database. To gain information on how long it takes a

[1] Frequency of responses is calculated by dividing the number of responses by the number of respondents.

[2] Numbers have been rounded.

[3] U.S. Department of Labor, Bureau of Labor Statistics, Table 9 of the Employer Costs for Employee Compensation (ECEC), Private Industry, goods-producing and service-providing industries, by occupational group, March 2013 (data extracted on 07/24/2013 from *http://www.bls.gov/news.release/ecec.t09.htm.*

manufacturer to submit a general comment or a claim that a report contains materially inaccurate information through the business portal, we contacted six businesses registered on the business portal. We asked each company how long it typically takes to research, compose, and enter a comment or a claim of materially inaccurate information. We had observed that a large percentage of the general comments come from a few businesses and assumed that the experience of a business that submits many comments each year would be different from one that submits only a few. Accordingly, we divided all responding businesses into three groups based on the number of general comments submitted in FY 2012, and then selected two businesses from each group to contact. The first group we contacted was made of up of businesses that submitted 50 or more comments in FY 2012, accounting for 46% of all general comments received. The second group we contacted included businesses that submitted 6 to 49 comments, accounting for 36% of all general comments received. The last group contacted included businesses that submitted no more than five comments, accounting for 18% of all general comments received.

To estimate the burden associated with submitting a general comment regarding a report of harm through the business portal, we averaged the burden provided by each company within each group and then calculated a weighted average from the three groups, weighting each group by the proportion of comments received from that group. We found that the average time to submit a general comment regarding a report of harm is 116 minutes based on the data in table 3 (((10 minutes + 180 minutes)/2 companies)*.46 + ((10 minutes + 30 minutes)/2 companies)*.36 + ((240 minutes + 480 minutes)/2 companies)*.18 = 116 minutes).

TABLE 3—ESTIMATED BURDEN TO ENTER A GENERAL COMMENT IN THE DATABASE

Group	Company	General comments (minutes)
Group 1 (≥50 comments)	Company A	10.
	Company B	180.
Group 2 (6–49 comments)	Company A	10.
	Company B	30.
Group 3 (≤5 comments)	Company A	240.
	Company B	480.

Registered businesses generally submit comments through our Web site. Unregistered businesses submit comments by mail, email, or fax. We estimate that submitting comments in this way takes a little longer because we often must ask the business to amend their submission to include the required certifications. Thus, we estimated that on average, comments submitted by mail, email, or fax take 30 minutes longer than those submitted through our Web site (116 minutes + 30 minutes = 146 minutes).

The submission of a claim of materially inaccurate information is a relatively rare event for all respondents, so we averaged all responses together. Four of the businesses contacted had submitted claims of materially inaccurate information during FY 2012. We found that the average time to submit a claim that a report of harm contains a material inaccuracy is 438 minutes ((10 minutes + 120 minutes + 180 minutes + 1,440 minutes)/4 companies = 438 minutes).

Registered businesses generally submit claims through the business portal. Unregistered businesses submit claims by mail, email, or fax. We estimate that submitting claims in this way takes a little longer because we often must ask the business to amend their submission to include the required certifications. Thus, we estimated that on average, claims submitted by mail, email, or fax take 30 minutes longer than those submitted through our Web site (438 minutes + 30 minutes = 468 minutes).

We had previously estimated that confidential information claims submitted through our Web site would take 15 minutes because the information to be entered would be readily accessible by the respondent. We have found that confidential information claims are very rare and do not have enough information to update this estimate. Although we have not received any confidential information claims by mail, email, or fax, based on our experience with comments and claims of materially inaccurate information, we estimate that a confidential information claim submitted by mail, email, or fax would take 30 minutes longer than those submitted through our Web site (15 minutes + 30 minutes = 45 minutes).

For voluntary brand identification, we estimate that a response would take 10 minutes on average. Most responses consist only of the brand name and a product description. In many cases a business will submit multiple entries in a brief period of time and we can see from the date and time stamps on these records that an entry often takes less than two minutes. CPSC staff enters the same data in a similar form based on our own research, and that experience was also factored into our estimate.

For small batch manufacturer identification, we estimate that a response would take 10 minutes on average. The form consists of three check boxes and the information should be readily accessible to the respondent.

The responses summarized in Table 2 are generally submitted by manufacturers. To avoid underestimating the cost associated with the collection of this data, we assigned the higher hourly wage associated with a manager or professional in goods-producing industries to these tasks. To estimate the cost of manufacturer submissions we multiplied the estimated total burden hours in Table 2 (15,557 hours) by an estimated total compensation for a manager or professional in goods-producing industries of $61.80 per hour,[4] which results in an estimated cost of $961,423 (15,557 hours × $61.80 per hour = $961,423).

Therefore, the total estimated annual cost to respondents is $1,086,332 ($124,909 burden for reports of harm + $961,423 burden for manufacturer submissions = $1,086,332).

[4] U.S. Department of Labor, Bureau of Labor Statistics, Table 9 of the Employer Costs for Employee Compensation (ECEC), Private Industry, goods-producing and service-providing industries, by occupational group, March 2013 (data extracted on 07/24/2013 from *http://www.bls.gov/news.release/ecec.t09.htm.*

2. Estimated Annual Burden on Government

The annualized cost to the CPSC is estimated to be $1,028,794. This figure is based on the costs for four categories of work for the Database: Reports of Harm, Materially Inaccurate Information Claims, Manufacturer Comments, and Small Batch Identification. Each category is described below. No government cost is associated with Voluntary Brand Identification because this information is entered directly into the Database by the manufacturer with no processing required by the government. The information assists the government in directing reports of harm to the correct manufacturer. We did not attempt to separately calculate the government cost for claims of confidential information because the number of claims is so small. The time to process these claims is included with claims of materially inaccurate information.

Reports of Harm: The Reports of Harm category includes many different tasks. Some costs related to this category are from a data entry contract. Tasks related to this contract include clerical coding of the report, such as identifying the type of consumer product reported and the appropriate associated hazard, as well as performing quality control on the data in the report. The contractor spends an estimated 3,380 hours per year performing these tasks. With an hourly rate of $32.57, the annual cost to the government is $110,087.

The Reports of Harm category also includes sending consent requests for reports when necessary, processing that consent when received, determining whether a product is out of CPSC's jurisdiction, and confirming that pictures and attachments do not have any personally identifiable information. The Reports category also entails notifying manufacturers when one of their products is reported, completing a risk of harm determination form for every report eligible for publication, referring some reports to a Subject Matter Expert (SME) within the CPSC for a determination on whether the reports meet the requirement of having a risk of harm, and determining whether a report meets all the statutory and regulatory requirements for publication. Detailed costs are described in Table 4.

TABLE 4—ESTIMATED COSTS FOR REPORTS OF HARM TASK

Grade level	Number of hours (annual)	Total compensation per hour	Total annual cost
Contract	3,380	$32.57	$110,086.60
7	1,560	33.03	51,526.80
9	832	40.53	33,720.96
12	6,396	58.78	375,956.88
13	884	69.67	61,588.28
14	2,053	82.60	169,577.80
15	421	96.84	40,769.64
Total	12,146		843,226.96

Materially Inaccurate Information (MII) Claims: The MII Claims category includes reviewing and responding to claims, participating in meetings where the claims are discussed, and completing a risk of harm determination on reports when a company alleges that a report does not describe a risk of harm. Detailed costs are described in Table 5.

TABLE 5—ESTIMATED COSTS FOR MII CLAIMS TASK

Grade level	Number of hours (annual)	Total compensation per hour	Total annual cost
12	364	$58.78	$21,395.92
13	1,040	69.67	72,456.80
14	378	82.60	31,222.80
15	151	96.84	14,622.84
SES	104	103.91	10,806.64
Total	2,037		150,505.00

Manufacturer Comments: The Comments category includes reviewing and accepting or rejecting comments. Detailed costs are described in Table 6.

TABLE 6—ESTIMATED COSTS FOR MANUFACTURER COMMENTS TASK

Grade level	Number of hours (annual)	Total compensation per hour	Total annual cost
12	104	$58.78	$6,113.12
13	182	69.67	12,679.94
Total	286		18,793.06

Small Batch Manufacturer Identification: The Small Batch Manufacturer Identification category includes time spent posting the list of small batch registrations, as well as answering manufacturer's questions on how to register as a Small Batch company and what it means to that company. Detailed costs are described in Table 7.

TABLE 7—ESTIMATED COSTS FOR SMALL BATCH TASK

Grade level	Number of hours (annual)	Total compensation per hour	Total annual cost
15	168	$96.84	$16,269.12
Total	168		16,269.12

We estimate the annualized cost to the CPSC of $1,028,794 by adding the four categories of work related to the Database summarized in Tables 4 through 7 (Reports of Harm ($843,226.96) + MII Claims ($150,505.00) + Manufacturer Comments ($18,793.06) + Small Batch Identification ($16,269.12) = $1,028,794).

This information collection renewal request based on an estimated 19,845 burden hours per year for the Database is a decrease of 17,284 hours since this collection of information was last approved by OMB in 2011. The decrease in burden is due primarily to the fact that the number of responses was overestimated in our original request.

Dated: October 28, 2013.

Todd A. Stevenson,

Secretary, Consumer Product Safety Commission.

[FR Doc. 2013–25893 Filed 10–30–13; 8:45 am]

BILLING CODE 6355–01–P

CONSUMER PRODUCT SAFETY COMMISSION

Sunshine Act Meeting Notice

TIME AND DATE: Wednesday, November 6, 2013, 10 a.m.–12 p.m.

PLACE: Room 420, Bethesda Towers, 4330 East West Highway, Bethesda, Maryland.

STATUS: Commission Meeting—Open to the Public.

MATTERS TO BE CONSIDERED:

Briefing: Hand Held Carriers—Final Rule

A live webcast of the Meeting can be viewed at *www.cpsc.gov/live.*

For a recorded message containing the latest agenda information, call (301) 504–7948.

CONTACT PERSON FOR MORE INFORMATION: Todd A. Stevenson, Office of the Secretary, U.S. Consumer Product Safety Commission, 4330 East-West Highway, Bethesda, MD 20814, (301) 504–7923.

Dated: October 29, 2013.

Todd A. Stevenson,

Secretary.

[FR Doc. 2013–26118 Filed 10–29–13; 4:15 pm]

BILLING CODE 6355–01–P

COORDINATING COUNCIL ON JUVENILE JUSTICE AND DELINQUENCY PREVENTION

[OJP (OJJDP) Docket No. 1637]

Meeting of the Coordinating Council on Juvenile Justice and Delinquency Prevention

AGENCY: Coordinating Council on Juvenile Justice and Delinquency Prevention.

ACTION: Notice of meeting.

SUMMARY: The Coordinating Council on Juvenile Justice and Delinquency Prevention (Council) announces its next meeting.

DATES: Wednesday, November 13, 2013 from 10:30 a.m. to 12:30 p.m.

ADDRESSES: The meeting will take place in the third floor main conference room at the U.S. Department of Justice, Office of Justice Programs, 810 7th St. NW., Washington, DC 20531.

FOR FURTHER INFORMATION CONTACT: Visit the Web site for the Coordinating Council at *www.juvenilecouncil.gov* or contact Kathi Grasso, Designated Federal Official, by telephone at 202–616–7567 [**Note:** this is not a toll-free telephone number], or by email at *Kathi.Grasso@usdoj.gov.* The meeting is open to the public.

SUPPLEMENTARY INFORMATION: The Coordinating Council on Juvenile Justice and Delinquency Prevention, established pursuant to Section 3(2)A of the Federal Advisory Committee Act (5 U.S.C. App. 2) will meet to carry out its advisory functions under Section 206 of the Juvenile Justice and Delinquency Prevention Act of 2002, 42 U.S.C. 5601, et seq. Documents such as meeting announcements, agendas, minutes, and reports will be available on the Council's Web page, *www.juvenilecouncil.gov,* where you may also obtain information on the meeting.

Although designated agency representatives may attend, the Council membership is composed of the Attorney General (Chair), the Administrator of the Office of Juvenile Justice and Delinquency Prevention (Vice Chair), the Secretary of Health and Human Services (HHS), the Secretary of Labor, the Secretary of Education, the Secretary of Housing and Urban Development, the Director of the Office of National Drug Control Policy, the Chief Executive Officer of the Corporation for National and Community Service, and the Assistant Secretary of Homeland Security for U.S. Immigration and Customs Enforcement. The nine additional members are appointed by the Speaker of the House of Representatives, the Senate Majority Leader, and the President of the United States. Other federal agencies take part in Council activities including the Departments of Agriculture, Defense, the Interior, and the Substance and Mental Health Services Administration of HHS.

Meeting Agenda

The preliminary agenda for this meeting includes presentations on and discussion of the Affordable Care Act (ACA) and its implications for adolescent and young adult populations, including youth transitioning from juvenile justice and child welfare systems. In addition, it is anticipated that member agencies and practitioners will provide updates on activities of relevance to the Council.

Registration

For security purposes, members of the public who wish to attend the meeting must pre-register online at *www.juvenilecouncil.gov* no later than November 7, 2013. Should problems

arise with web registration, call Daryel Dunston at 240–432–3014 or send a request to register to Mr. Dunston. Include name, title, organization or other affiliation, full address and phone, fax and email information and send to his attention by email to *ddunston@aeioonline.com.* [**Note:** these are not toll-free telephone numbers.] Additional identification documents may be required. Space is limited.

Note: Photo identification will be required for admission to the meeting.

Written Comments: Interested parties may submit written comments and questions by Thursday, November 7, 2013, to Kathi Grasso, Designated Federal Official for the Coordinating Council on Juvenile Justice and Delinquency Prevention, at *Kathi.Grasso@usdoj.gov.* The Coordinating Council on Juvenile Justice and Delinquency Prevention expects that the public statements submitted will not repeat previously submitted statements. Written questions from the public may also be invited at the meeting.

Robert L. Listenbee,

Administrator.

[FR Doc. 2013–25819 Filed 10–30–13; 8:45 am]

BILLING CODE 4410–18–P

CORPORATION FOR NATIONAL AND COMMUNITY SERVICE

Proposed Information Collection; Comment Request

AGENCY: Corporation for National and Community Service.

ACTION: Notice.

SUMMARY: The Corporation for National and Community Service (CNCS), as part of its continuing effort to reduce paperwork and respondent burden, conducts a pre-clearance consultation program to provide the general public and federal agencies with an opportunity to comment on proposed and/or continuing collections of information in accordance with the Paperwork Reduction Act of 1995 (PRA95) (44 U.S.C. Sec. 3506(c)(2)(A)). This program helps to ensure that requested data can be provided in the desired format, reporting burden (time and financial resources) is minimized, collection instruments are clearly understood, and the impact of collection requirement on respondents can be properly assessed.

Currently, CNCS is soliciting comments concerning its proposed School Turnaround AmeriCorps Grantee Progress Report (GPR). All AmeriCorps grantees are required to complete a GPR, which is due in October, to complete an abbreviated mid-year GPR due in April, and to complete a final GPR within 90 days of grant closeout. The GPR provides information for CNCS staff to monitor grantee progress and to respond to requests from Congress and other stakeholders.

Copies of the information collection request can be obtained by contacting the office listed in the **ADDRESSES** section of this notice.

DATES: Written comments must be submitted to the individual and office listed in the **ADDRESSES** section by December 30, 2013.

ADDRESSES: You may submit comments, identified by the title of the information collection activity, by any of the following methods:

(1) *By mail sent to:* Corporation for National and Community Service, AmeriCorps State and National, Attention Carla Ganiel, Senior Program and Project Specialist, Room 9517E, 1201 New York Avenue NW., Washington, DC 20525.

(2) By hand delivery or by courier to the CNCS mailroom at Room 8100 at the mail address given in paragraph (1) above, between 9:00 a.m. and 4:00 p.m. Eastern Time, Monday through Friday, except Federal holidays.

(3) *By fax to:* (202) 606–3476, Attention: Carla Ganiel, Senior Program and Project Specialist.

(4) Electronically through *www.regulations.gov.*

Individuals who use a telecommunications device for the deaf (TTY–TDD) may call 1–800–833–3722 between 8:00 a.m. and 8:00 p.m. Eastern Time, Monday through Friday.

FOR FURTHER INFORMATION CONTACT: Carla Ganiel, (202) 606–6773, or by email at *cganiel@cns.gov.*

SUPPLEMENTARY INFORMATION: CNCS is particularly interested in comments that:

- Evaluate whether the proposed collection of information is necessary for the proper performance of the functions of CNCS, including whether the information will have practical utility;
- Evaluate the accuracy of the agency's estimate of the burden of the proposed collection of information, including the validity of the methodology and assumptions used;
- Enhance the quality, utility, and clarity of the information to be collected; and
- Minimize the burden of the collection of information on those who are expected to respond, including the use of appropriate automated, electronic, mechanical, or other technological collection techniques or other forms of information technology (e.g., permitting electronic submissions of responses).

Background

All AmeriCorps grantees complete the GPR, mid-year GPR and a final GPR within 90 days of grant closeout, which provide information for CNCS staff to monitor grantee progress and to respond to requests from Congress and other stakeholders. The information is collected electronically through the eGrants system.

Current Action

This is a new information request. Although all AmeriCorps grantees are currently required to complete the GPR, School Turnaround grantees are required to report on additional demographic indicators.

Type of Review: New.

Agency: Corporation for National and Community Service.

Title: School Turnaround Grantee Progress Report.

OMB Number: None.

Agency Number: None.

Affected Public: School Turnaround AmeriCorps grantees.

Total Respondents: 50.

Frequency: Biannual with one additional final report required at closeout of the grant.

Average Time Per Response: 9 hours per submission.

Estimated Total Burden Hours: 900.

Total Burden Cost (capital/startup): None.

Total Burden Cost (operating/maintenance): None.

Comments submitted in response to this notice will be summarized and/or included in the request for Office of Management and Budget approval of the information collection request; they will also become a matter of public record.

Dated: October 25, 2013.

William Basl,

AmeriCorps State and National.

[FR Doc. 2013–25822 Filed 10–30–13; 8:45 am]

BILLING CODE 6050–28–P

CORPORATION FOR NATIONAL AND COMMUNITY SERVICE

Information Collection; Submission for OMB Review, Comment Request

AGENCY: Corporation for National and Community Service.

ACTION: Notice.

SUMMARY: The Corporation for National and Community Service (CNCS) has

submitted a public information collection request (ICR) entitled AmeriCorps State and National Grantee Progress Report for review and approval in accordance with the Paperwork Reduction Act of 1995, Public Law 104–13, (44 U.S.C. Chapter 35). Copies of this ICR, with applicable supporting documentation, may be obtained by calling CNCS, Carla Ganiel, at (202) 606–6773 or email to *cganiel@cns.gov.* Individuals who use a telecommunications device for the deaf (TTY–TDD) may call 1–800–833–3722 between 8:00 a.m. and 8:00 p.m. Eastern Time, Monday through Friday.

ADDRESSES: Comments may be submitted, identified by the title of the information collection activity, to the Office of Information and Regulatory Affairs, Attn: Ms. Sharon Mar, OMB Desk Officer for the Corporation for National and Community Service, by any of the following two methods within 30 days from the date of publication in the **Federal Register**:

(1) *By fax to:* (202) 395–6974, Attention: Ms. Sharon Mar, OMB Desk Officer for the Corporation for National and Community Service; or

(2) *By email to: smar@omb.eop.gov.*

SUPPLEMENTARY INFORMATION: The OMB is particularly interested in comments which:

- Evaluate whether the proposed collection of information is necessary for the proper performance of the functions of CNCS, including whether the information will have practical utility;
- Evaluate the accuracy of the agency's estimate of the burden of the proposed collection of information, including the validity of the methodology and assumptions used;
- Propose ways to enhance the quality, utility, and clarity of the information to be collected; and
- Propose ways to minimize the burden of the collection of information on those who are to respond, including through the use of appropriate automated, electronic, mechanical, or other technological collection techniques or other forms of information technology.

Comments

A 60-day Notice requesting public comment was published in the **Federal Register** on July 22, 2013. This comment period ended September 20, 2013. Seven entities provided comments. Individual comments and the disposition of each are addressed below.

Three commenters asked which grantees and subgrantees complete which version of the GPR and whether separate sets of instructions are needed for state commissions. Commission subgrantees and national grantees that were new or recompete applicants during the 2013 competition are subject to the new GPR instructions. All other subgrantees and national grantees are subject to the old instructions as revised in this clearance. Commissions that have both types of subgrantees on the same prime grant will complete two separate progress reports, one for each type of grantee. Starting with the 2014 grant year, all subgrantees and national grantees will use the new instructions.

The following chart illustrates which 2013 grantees and subgrantees are subject to which set of GPR instructions:

Type of grantee	Type of applicant in 2013	Old GPR instructions	New GPR instructions	Notes
National	New or recompete		X	
	Continuation	X		
State Subgrantee	New or recompete		X	Commission completes one prime GPR for this set of subgrantees.
	Continuation	X		Commission completes one prime GPR for this set of subgrantees.

CNCS will continue to use one set of instructions for all grantees. The reporting screens are nearly identical for state commissions and national grantees, more so than in the previous iteration of the GPR, which had a single set of instructions.

Five commenters stated that the burden of the new GPR is higher than the old GPR and that the burden is higher for state commissions than it is for national grantees. While the change in the way MSYs are reported will increase burden, we believe that this is balanced by the reduction in the number of demographic indicators and, for state commissions, a decrease in burden associated with providing explanations regarding formula subgrantees, which is no longer required. Also, automated completion checks will not allow incomplete progress reports to be submitted which will result in less back and forth between CNCS and grantees. Lastly, CNCS has decided to collect MSY data at the strategic plan level only, not at the performance measure level, to minimize burden.

CNCS acknowledges that the level of burden is higher for some commissions with a large number of subgrantees or multiple prime grants than for other commissions and national grantees. Based on comments and the inclusion of the final GPR due at grant closeout, CNCS has increased the burden estimate.

Four commenters focused on the timeline and testing of the new GPR. CNCS cannot delay the new GPR. Very little new information is required to complete this report. Although the demographic indicators have been revised, all new indicators are optional. No changes have been made to mandatory demographic indicators or to the information collected in the performance measures section of the GPR. The narrative questions require synthesis of information about program activity that is readily available through routine monitoring and technical assistance that is already being conducted. The due date of the end-of-year GPR will not change. Three rounds of user acceptance testing were completed by AmeriCorps program staff in June and July 2013.

Three commenters focused on changes in the demographics tab concerning what is being collected and the utility of some indicators. The demographic indicators have been revised so that they are consistent with the CNCS strategic plan and the Serve America Act.

Three commenters focused on the Member Service Year (MSY) tab and the burden associated with reporting MSYs and member activity. Reporting MSYs and member activity at the level of strategic plan objective, rather than focus area, is critical for CNCS to understand the value of its investment relative to its strategic plan. Member counts at the strategic objective level allow CNCS to state how many members are performing activities under each strategic plan objective. CNCS has chosen not to collect MSY and member

activity data at the performance measurement level, thereby reducing burden.

Six commenters focused on CNCS's expectation that programs aim to achieve 100% retention, reliance on data from the portal, and the mechanisms for providing comments on this data. The data in the performance indicator tab (enrollment, retention, 30-day enrollment and 30-day exit data) will refresh for each reporting period. In response to comments, CNCS will only require this tab for the end-of-year GPR due in October 2014 and each year thereafter, and the instructions have been updated to reflect this change. CNCS will request an IT enhancement to add a warning to the performance indicators tab that the data cannot be refreshed once it has been populated. CNCS recognizes that retention rates may vary among effective programs depending on the program model. CNCS will continue to request explanations for any retention rate below 100%. Text boxes are provided for grantees to comment on data from the portal that requires explanation.

Three commenters focused on requiring explanations for incomplete data (performance indicators and performance measures) in the mid-year GPR. CNCS will not include the performance indicators tab in the mid-year GPR. We have updated the instructions for the mid-year GPR with instructions to enter ''NA'' in the outcome explanation fields as it is a system requirement that some text be entered in these fields.

Two commenters focused on changes in the performance measurement data collected. The performance measure section of the new GPR requires no data that was not collected in the old GPR.

One commenter suggested that CNCS should collect performance measurement data as percentages rather than numerical values. Whole numbers are required so that data can be aggregated across programs.

Five commenters stated that instructions for narrative questions are not clear to state commissions. We have added additional information in the instructions to clarify how state commissions should address the narrative questions.

Description: CNCS is seeking approval of AmeriCorps State and National Grantee Progress Report, which is used by grantees to provide information for CNCS staff to monitor grantee progress and to respond to requests from Congress and other stakeholders.

Type of Review: Renewal.

Agency: Corporation for National and Community Service.

Title: AmeriCorps State and National Grantee Progress Report.

OMB Number: 3045–0101.

Agency Number: None.

Affected Public: AmeriCorps State and National Grantees.

Total Respondents: 154.

Frequency: Biannual with one final report required at grant closeout.

Average Time per Response: 9 hours per submission.

Estimated Total Burden Hours: 3,234.

Total Burden Cost (capital/startup): None.

Total Burden Cost (operating/maintenance): None.

Dated: October 25, 2013.

William Basl,

Director, AmeriCorps State and National.

[FR Doc. 2013–25825 Filed 10–30–13; 8:45 am]

BILLING CODE 6050–28–P

DEPARTMENT OF DEFENSE

Office of the Secretary

[Docket ID: DoD–2013–OS–0209]

Notice of Availability (NOA) for General Purpose Warehouse and Information Technology Center Construction (GPW/IT)—Tracy Site—Environmental Assessment

AGENCY: Defense Logistics Agency, DoD.

ACTION: Notice of Availability (NOA) for GPW/IT—Tracy Site—Environmental Assessment.

SUMMARY: The Defense Logistics Agency (DLA) announces the availability of an environmental assessment (EA) for the potential environmental impacts associated with the proposed action to construct a General Purpose Warehouse and Information Technology Center at Defense Distribution Depot San Joaquin, California—Tracy Site. The EA has been prepared as required under the National Environmental Policy Act (NEPA) (1969). In addition, the EA complies with DLA Regulation (DLAR) 1000.22. DLA has determined that the proposed action was not a major federal action significantly affecting the quality of the human environment within the context of NEPA. Therefore, the preparation of an environmental impact statement (EIS) is not required.

DATES: The public comment period will end 30 days after publication of this NOA in the **Federal Register**. Comments received by the end of the 30-day period will be considered when preparing the final version of the document. The EA is available electronically at *http://www.dla.mil//Documents/GPWITCenter-TracySiteEA September2013.pdf.*

ADDRESSES: You may submit comments to one of the following:

- *Federal eRulemaking Portal: http://www.regulations.gov.* Follow the instructions for submitting comments.
- *Mail:* Federal Docket Management System Office, 4800 Mark Center Drive, East Tower, 2nd floor, Suite 02G09, Alexandria, VA 22350–3100.

FOR FURTHER INFORMATION CONTACT: Ann Engelberger at (703) 767–0705 during normal business hours Monday through Friday, from 8:00 a.m. to 4:30 p.m. (EST) or by email: *Ann.Engelberger@dla.mil.*

Dated: October 28, 2013.

Aaron Siegel,

Alternate OSD Federal Register Liaison Officer, Department of Defense.

[FR Doc. 2013–25873 Filed 10–30–13; 8:45 am]

BILLING CODE 5001–06–P

DEPARTMENT OF DEFENSE

Department of the Army

Western Hemisphere Institute for Security Cooperation Board of Visitors; Meeting

AGENCY: Department of the Army, DoD.

ACTION: Notice of open meeting.

SUMMARY: This notice sets forth the schedule and summary agenda for the annual meeting of the Board of Visitors, Western Hemisphere Institute for Security Cooperation (WHINSEC). This meeting will be conducted as a telephone conference call. Members of the public will be able to listen in on the proceedings. Time is also allotted in the agenda for public comments by individuals and organizations that may wish to address the Board.

Date: Tuesday, November 19, 2013.

Time: 2 p.m. to 4 p.m. Eastern Standard Time (1 p.m. to 3 p.m. Central Standard Time).

Location: This will be a Telephonic Conference.

Proposed Agenda: Update briefings from the WHINSEC Commandant; Department of State; US Northern Command and US Southern Command; the Office of the Secretary of Defense (Policy); the Board's Subcommittees on Education and Outreach respectively; and Public Comments period.

FOR FURTHER INFORMATION CONTACT: Mr. Richard Procell at (913) 684–2963 or *richard.procell@us.army.mil.*

SUPPLEMENTARY INFORMATION: This meeting is open to the public. Pursuant to the Federal Advisory Committee Act of 1972 and 41 CFR 102–3.140(c), members of the public or interested groups may submit written statements

to the advisory committee for consideration by its members. Written statements should be no longer than two type-written pages and sent via fax to (913) 684–2466 or emailed to *richard.procell@us.army.mil* by 5 p.m. EST on Tuesday, November 12, 2013, for consideration at this meeting. Public comments by individuals and organizations may be made from 2:50 p.m. to 3:00 p.m. EST during the meeting on November 19, 2013. Public comments will be limited to two minutes each. Anyone desiring to make an oral statement must register by sending a fax to (913) 684–2466 or email to *richard.procell@us.army.mil* with his/her name, phone number, email address, and text of his/her comments by 5 p.m. EST on Tuesday, November 12, 2013. The first five requestors will be notified by 5 p.m. EST on Thursday, November 14, 2013, of their time to address the Board during the public comment forum. All other comments will be retained for the record. Note that the number of teleconference lines is limited and will be available on a first-come, first-served basis. Members of the public wishing to participate in person on November 19, 2013, at WHINSEC, 7161 Richardson Circle, Fort Benning, GA 31905, please contact Mr. Richard Procell at (913) 684–2963 or *richard.procell@us.army.mil* for additional information.

Brenda S. Bowen,

Army Federal Register Liaison Officer.

[FR Doc. 2013–25921 Filed 10–30–13; 8:45 am]

BILLING CODE 3710–08–P

DEPARTMENT OF DEFENSE

Department of the Army; Corps of Engineers

Notice of Availability of a Draft Supplement to the July 2011 Environmental Impact Statement for the proposed SR 1409 (Military Cutoff Road) Extension and Proposed US 17 Hampstead Bypass New Hanover and Pender Counties in North Carolina, NCDOT TIP Projects U–4751 and R–3300

AGENCY: Department of the Army, U.S. Army Corps of Engineers, DoD.

ACTION: Notice of Availability.

SUMMARY: The U.S. Army Corps of Engineers (COE), Wilmington District, Wilmington Regulatory Division is issuing this notice to advise the public that a State of North Carolina funded Supplement Draft Environmental Impact Statement (DEIS) has been prepared describing changes since the release of the July 2011 DEIS for a road improvement project starting at Military Cutoff Road in New Hanover County to north of Hampstead along US 17, Pender County, NC (TIP Projects U–4751 and R–3300). The changes which have necessitated this new supplement include an additional interchange on the north end of the project corridor as well as additional lanes not disclosed in the 2011 DEIS published in the **Federal Register** on September 23, 2011 (76 FR 59122).

DATES: Written comments on the Draft EIS will be received until December 16, 2013.

ADDRESSES: Mr. Brad Shaver, Regulatory Project Manager, Wilmington Regulatory Field Office, 69 Darlington Ave., Wilmington, NC 28403 or Mr. Jay McInnis, Project Engineer, North Carolina Department of Transportation, 1548 Mail Service Center, Raleigh, NC 27699–1548.

FOR FURTHER INFORMATION CONTACT: Questions about the proposed action and DEIS can be directed to Mr. Brad Shaver, COE—Regulatory Project Manager, telephone: (910) 251–4611 or Mr. Jay McInnis Jr., P.E., NCDOT—Project Engineer, telephone: (919) 707–6029.

SUPPLEMENTARY INFORMATION: The COE in cooperation with the North Carolina Department of Transportation prepared a DEIS, originally published in 2011, on a proposal to make transportation improvements to the US 17 and Market Street (US 17 Business) corridor in northern New Hanover and southern Pender Counties. Two North Carolina Department of Transportation Improvement Program (TIPs U–4751 and R–3300) projects are being evaluated as part of the US 17 Corridor Study.

The purpose of the US 17 Corridor Study project is to improve the traffic carrying capacity and safety of the US 17 and Market Street corridor in the project area. The project study area is roughly bounded on the west by I–40, on the north by the Northeast Cape Fear River, Holly Shelter Game Lands to the east, and Market Street and US 17 to the south.

This project is being reviewed through the Merger 01 process designed to streamline the project development and permitting processes, agreed to by the COE, North Carolina Department of Environment and Natural Resources (Division of Water Quality, Division of Coastal Management), Federal Highway Administration (for this project not applicable), and the North Carolina Department of Transportation and supported by other stakeholder agencies and local units of government. The other partnering agencies include: U.S. Environmental Protection Agency; U.S. Fish and Wildlife Service; N.C. Wildlife Resources Commission; N.C. Department of Cultural Resources; and the Wilmington Metropolitan Planning Organization. The Merger process provides a forum for appropriate agency representatives to discuss and reach consensus on ways to facilitate meeting the regulatory requirements of Section 404 of the Clean Water Act during the NEPA/SEPA decision-making phase of transportation projects.

Through input from the public and resource agencies the project has been changed to include a second interchange at the northern terminus. Additionally, the project currently proposes additional travel lanes between a previously proposed interchange south of the Topsail High School and the aforementioned northern interchange. These changes were considered substantial changes which the public has not had input and thus necessitates the development and release of the supplement Draft EIS. The original Draft EIS and new Supplement DEIS is available for review on the project Web page: *http://www.ncdot.gov/projects/US17HampsteadBypass/.*

Any person having difficulty in viewing the document online can contact the COE project manager or the NCDOT project manager for a CD copy of the document.

After distribution and review of the Supplement Draft EIS and Final EIS, the Applicant understands that the U.S. Army Corps of Engineers in coordination with the North Carolina Department of Transportation will issue a Record of Decision (ROD) for the project. The ROD will document the completion of the EIS process and will serve as a basis for permitting decisions by federal and state agencies.

To ensure that the full range of issues related to this proposed action are addressed and all significant issues identified, comments and suggestions are invited from all interested parties. Comments or questions concerning this proposed action and the EIS should be directed to the US Army Corps of Engineers at the address provided. The Wilmington District will periodically issue Public Notices soliciting public and agency comment on the proposed action and alternatives to the proposed action as they are developed.

Dated: October 18, 2013.

Henry Wicker,

Assistant Chief, Wilmington Regulatory Division.

[FR Doc. 2013–25919 Filed 10–30–13; 8:45 am]

BILLING CODE 3720–58–P

DEPARTMENT OF DEFENSE

Department of the Navy

Notice of Public Meetings for the Draft Environmental Impact Statement/ Overseas Environmental Impact Statement for Military Readiness Activities in the Mariana Islands Training and Testing Study Area; Correction and Public Comment Period Extension

AGENCY: Department of Navy, DoD.

ACTION: Notice; correction and extension.

SUMMARY: The Department of the Navy published a document in the **Federal Register**(78 FR 178) on September 13, 2013, concerning public meetings to support the Draft Environmental Impact Statement/Overseas Environmental Impact Statement (EIS/OEIS) for the Mariana Islands Training and Testing Study Area. Due to the shutdown of the U.S. federal government, the public meetings have been postponed and the public comment period extended. The public comment period on the Draft EIS has been extended from November 12, 2013, to December 12, 2013.

FOR FURTHER INFORMATION CONTACT: Ms. Nora Macariola-See, Naval Facilities Engineering Command, Pacific. Attention: MITT EIS/OEIS, 258 Makalapa Drive, Suite 100, Building 258, Floor 3, Pearl Harbor, Hawaii 96860–3134.

Correction: In the **Federal Register** (78 FR 178) of September 13, 2013, on page 56683, in the first column, correct the public meeting dates to read:

1. Tuesday, November 12, 2013, at the University of Guam, Leon Guerrero School of Business and Public Administration Building, Anthony Leon Guerrero Multi-Purpose Room 129, Mangilao, Guam 96923.
2. Wednesday, November 13, 2013, at the Pedro P. Tenorio Multi-Purpose Center in Susupe, Saipan, MP 96950.
3. Thursday, November 14, 2013, at the Tinian High School Cafeteria, San Jose Village, Tinian, MP 96952.
4. Friday, November 15, 2013, at the Sinapalo Elementary School Cafeteria, Sinapalo I, Rota, MP 96951.

All meetings will be held from 5:00 p.m. to 8:00 p.m.

Extension: The public comment period for the Draft EIS/OEIS for the Mariana Islands Training and Testing Study Area has been extended from November 12, 2013, to December 12, 2013.

Dated: October 24, 2013.

N.A. Hagerty-Ford,

Commander, Office of the Judge Advocate General, U.S. Navy, Federal Register Liaison Officer.

[FR Doc. 2013–25942 Filed 10–30–13; 8:45 am]

BILLING CODE 3810–FF–P

DEPARTMENT OF EDUCATION

[Docket No.: ED–2013–ICCD–0139]

Agency Information Collection Activities; Comment Request; Evaluation of a District Wide Implementation of a Professional Learning Community Initiative

AGENCY: Institute of Education Sciences (IES), Department of Education (ED).

ACTION: Notice.

SUMMARY: In accordance with the Paperwork Reduction of 1995 (44 U.S.C. chapter 3501 *et seq.*), ED is proposing a new information collection.

DATES: Interested persons are invited to submit comments on or before December 30, 2013.

ADDRESSES: Comments submitted in response to this notice should be submitted electronically through the Federal eRulemaking Portal at *http://www.regulations.gov* by selecting Docket ID number ED–2013–ICCD–0139 or via postal mail, commercial delivery, or hand delivery. Please note that comments submitted by fax or email and those submitted after the comment period will not be accepted. Written requests for information or comments submitted by postal mail or delivery should be addressed to the Director of the Information Collection Clearance Division, U.S. Department of Education, 400 Maryland Avenue SW., LBJ, Room 2E103, Washington, DC 20202–4537.

FOR FURTHER INFORMATION CONTACT: For questions related to collection activities or burden, please call Kathy Axt, 540–776–7742 or electronically mail *ICDocketmgr@ed.gov.* Please do not send comments here.

SUPPLEMENTARY INFORMATION: The Department of Education (ED), in accordance with the Paperwork Reduction Act of 1995 (PRA) (44 U.S.C. 3506(c)(2)(A)), requires that Federal agencies provide interested parties an early opportunity to comment on information collection requests. The Director, Information Collection Clearance Division, Privacy, Information and Records Management Services, Office of Management, publishes this notice containing proposed information collection requests at the beginning of the Department review of the information collection. The Department of Education is especially interested in public comment addressing the following issues: (1) Is this collection necessary to the proper functions of the Department; (2) will this information be processed and used in a timely manner; (3) is the estimate of burden accurate; (4) how might the Department enhance the quality, utility, and clarity of the information to be collected; and (5) how might the Department minimize the burden of this collection on the respondents, including through the use of information technology. Please note that written comments received in response to this notice will be considered public records.

Title of Collection: Evaluation of a District Wide Implementation of a Professional Learning Community Initiative.

OMB Control Number: 1850—NEW.

Type of Review: A new information collection.

Respondents/Affected Public: Individuals or households.

Total Estimated Number of Annual Responses: 806.

Total Estimated Number of Annual Burden Hours: 427.

Abstract: This study aims to address the need for systematic information about district-wide implementation of professional learning communities (PLCs) as a critical element in improving teacher quality and instruction, thereby contributing to increased student achievement. The study will survey (online) a population of teacher participants in school-based PLCs and interview principals face to face about the context and their perceptions of the initiative, pre- and post-implementation. Data collection from teachers will focus on what the PLCs do, how they operate, and to what extent they produce the outcomes expected of them as framed by six conceptual attributes of PLCs and five specific tasks. Data collection from principals will focus on contextual information about school culture and conditions such as resources that support implementation. Teachers and principals will also provide their reflections on the challenges of implementing PLCs and their suggestions for improvement. The analysis will enable comparisons among PLCs within and across schools. Study findings are expected to inform both theory and practice related to

implementation of professional learning communities.

Dated: October 25, 2013.

Kate Mullan,

Acting Director, Information Collection Clearance Division, Privacy, Information and Records Management Services, Office of Management.

[FR Doc. 2013–25801 Filed 10–30–13; 8:45 am]

BILLING CODE 4000–01–P

DEPARTMENT OF EDUCATION

[Docket ID: ED–2013–OELA–0107]

Request for Information To Inform the Title III Technical Assistance Agenda and the Future Activities and Services of The National Clearinghouse for English Language Acquisition (NCELA)

AGENCY: Office of English Language Acquisition, Language Enhancement, and Academic Achievement for Limited English Proficient Students, Department of Education.

ACTION: Request for information; notice to reopen the public comment period.

SUMMARY: On September 5, 2013, we published in the **Federal Register** an RFI that established a September 25, 2013, deadline for the submission of written comments. We are reopening the public comment period to give interested parties additional time to submit written comments.

DATES: Written submissions must be received by the Department on or before November 12, 2013.

ADDRESSES: Submit your comments through the Federal eRulemaking Portal or via U.S. mail, commercial delivery, or hand delivery. We will not accept comments submitted by fax or by email or those submitted after the comment period. To ensure that we do not receive duplicate copies, please submit your comments only once. In addition, please include the Docket ID and the term ''Technical Assistance-NCELA'' at the top of your comments.

- *Federal eRulemaking Portal:* Go to *www.regulations.gov* to submit your comments electronically. Information on using Regulations.gov, including instructions for accessing agency documents, submitting comments, and viewing the docket, is available on the site under ''Are you new to the site.''
- *U.S. Mail, Commercial Delivery, or Hand Delivery:* If you mail or deliver your comments about this RFI, address them to Melissa Escalante, U.S. Department of Education, Office of English Language Acquisition, 400 Maryland Avenue SW., Room 5C148, Washington, DC 20202–6132.
- *Privacy Note:* The Department's policy is to make all comments received from members of the public available for public viewing in their entirety on the Federal eRulemaking Portal at *www.regulations.gov*. Therefore, commenters should be careful to include in their comments only information that they wish to make publicly available.

Submission of Proprietary Information: Given the subject matter, some comments may include proprietary information as it relates to confidential commercial information. The Freedom of Information Act defines ''confidential commercial information'' as information the disclosure of which could reasonably be expected to cause substantial competitive harm. You may wish to request that we not disclose what you regard as confidential commercial information.

To assist us in making a determination on your request, we encourage you to identify any specific information that you consider confidential commercial information. Please list the information by page and paragraph numbers.

This Request for Information (RFI) is issued solely for information and planning purposes and is not a request for proposals (RFP), a promise to issue an RFP, or a notice inviting applications (NIA), nor does it serve as a modification to the current NCELA contract. This RFI does not commit the Department to contract for any supply or service whatsoever. Further, the Department is not now seeking proposals and will not accept unsolicited proposals. The Department will not pay for any information or administrative costs that you may incur in responding to this RFI.

If you do not respond to this RFI, you may still apply for future contracts and grants. The Department posts RFPs on the Federal Business Opportunities Web site (*www.fbo.gov*). The Department announces grant competitions in the **Federal Register** (*www.gpo.gov/fdsys*). It is your responsibility to monitor these sites to determine whether the Department issues an RFP or NIA after considering the information received in response to this RFI.

The documents and information submitted in response to this RFI become the property of the U.S. Government and will not be returned.

FOR FURTHER INFORMATION CONTACT: Melissa Escalante, U.S. Department of Education, 400 Maryland Avenue SW., Room 5C148, Washington, DC 20202–6132 by phone at 202–401–1407.

If you use a telecommunications device for the deaf (TDD) or a text telephone (TTY), call the Federal Relay Service (FRS), toll free, at 1 (800) 877–8339.

SUPPLEMENTARY INFORMATION:

Background

On September 5, 2013, we published an RFI in the **Federal Register** (78 FR 54638) to collect information in two intertwining areas in support of the English learner community. First, the Department seeks information on the technical assistance needs of State educational agencies (SEAs), local educational agencies (LEAs), administrators, and teachers who provide services to English learners (ELs). Second, the Department seeks information on how we can best disseminate technical assistance, including materials through the National Clearinghouse for English Language Acquisition and Language Instruction Educational programs (NCELA) in support of the EL community and those who provide services to ELs. The September fifth publication provided some helpful questions that could assist commenters in preparing their comments. See 78 FR 54638. The deadline for written submissions during the initial comment period was September 25, 2013. We are reopening the comment period for written submissions in response to the RFI notice through November 12, 2013. We are reopening the comment period to maximize opportunities for the public to provide input on the National Clearinghouse and our technical assistance agenda for English learners and those who support them.

Accessible Format: Individuals with disabilities can obtain this document in an accessible format (e.g., braille, large print, audiotape, or compact disc) on request to the contact person listed under **FOR FURTHER INFORMATION CONTACT**.

Electronic Access to This Document: The official version of this document is the document published in the **Federal Register**. Free Internet access to the official edition of the **Federal Register** and the Code of Federal Regulations is available via the Federal Digital System at: *www.gpo.gov/fdsys.* At this site you can view this document, as well as all other documents of this Department published in the **Federal Register**, in text or Adobe Portable Document Format (PDF). To use PDF, you must have Adobe Acrobat Reader, which is available free at this site.

You may also access documents of the Department published in the **Federal Register** by using the article search

feature at: *www.federalregister.gov.* Specifically, through the advanced search feature at this site, you can limit your search to documents published by the Department.

Dated: October 28, 2013.

Libia Socorro Gil,

Assistant Deputy Secretary and Director for English Language Acquisition, Language Enhancement and Academic Achievement for Limited English Proficient Students.

[FR Doc. 2013–26008 Filed 10–30–13; 8:45 am]

BILLING CODE 4000–01–P

DEPARTMENT OF ENERGY

Orders Granting Authority To Import and Export Natural Gas, and To Import and Export Liquefied Natural Gas During August 2013

	FE Docket Nos.
Twin Eagle Resource Management Canada, LLC.	13–91–NG
Hartland Fuel Products, LLC.	13–84–LNG
Public Utility District No. 1 of Clark County.	13–88–NG
Occidental Energy Marketing, Inc.	13–89–LNG
Twin Eagle Resource Management, LLC.	13–90–NG
Just Energy New York Corp	13–86–NG
Lake Charles Exports, LLC	13–59–LNG
Newpage Corporation	13–93–NG
Koch Energy Services, LLC	13–92–NG
Enterprise Products Operating LLC.	13–94–NG
Pacific Gas And Electric Company.	13–95–NG
Barclays Bank PLC	13–99–NG

AGENCY: Office of Fossil Energy, Department of Energy.

ACTION: Notice of orders.

SUMMARY: The Office of Fossil Energy (FE) of the Department of Energy gives notice that during August 2013, it issued orders granting authority to import and export natural gas, and to import and export liquefied natural gas. These orders are summarized in the attached appendix and may be found on the FE Web site at *http://www.fossil.energy.gov/programs/gasregulation/authorizations/Orders-2013.html.* They are also available for inspection and copying in the Office of Oil and Gas Global Security and Supply, Office of Fossil Energy, Docket Room 3E–033, Forrestal Building, 1000 Independence Avenue SW., Washington, DC 20585, (202) 586–9478. The Docket Room is open between the hours of 8:00 a.m. and 4:30 p.m., Monday through Friday, except Federal holidays.

Issued in Washington, DC, on October 24, 2013.

John A. Anderson,

Manager, Natural Gas Regulatory Activities, Office of Oil and Gas Global Security and Supply, Office of Fossil Energy.

Appendix

DOE/FE ORDERS GRANTING IMPORT/EXPORT AUTHORIZATIONS

3318	08/01/13	13–91–NG	Twin Eagle Resource Management Canada, LLC.	Order granting blanket authority to import/export natural gas from/to Canada and to export natural gas to Mexico.
3319	08/01/13	13–84–LNG ...	Hartland Fuel Products, LLC	Order granting blanket authority to export LNG to Canada by truck.
3320	08/01/13	13–88–NG	Public Utility District No. 1 of Clark County	Order granting blanket authority to import/export natural gas from/to Canada.
3321	08/01/13	13–89–LNG ...	Occidental Energy Marketing, Inc	Order granting blanket authority to import LNG from various international sources by vessel.
3322	08/01/13	13–90–NG	Twin Eagle Resource Management, LLC	Order granting blanket authority to import/export natural gas from/to Canada, and to export natural gas to Mexico.
3323	08/01/13	13–86–NG	Just Energy New York Corp	Order granting blanket authority to import/export natural gas from/to Canada.
3324	08/07/13	11–59–LNG ...	Lake Charles Exports, LLC	Order conditionally granting long-term Multi-Contract authorization to export LNG by vessel from the Lake Charles Terminal to Non-Free Trade Agreement Nations.
3325	08/15/13	13–93–NG	NewPage Corporation	Order granting blanket authority to import natural gas from Canada.
3326	08/22/13	13–92–NG	Koch Energy Services, LLC	Order granting blanket authority to import/export natural gas from/to Canada.
3327	08/22/13	13–94–NG	Enterprise Products Operating LLC	Order granting blanket authority to import/export natural gas from/to Canada/Mexico.
3328	08/22/13	13–95–NG	Pacific Gas and Electric Company	Order granting blanket authority to export natural gas to Canada.
3329	08/22/13	13–99–NG	Barclays Bank PLC	Order granting blanket authority to import/export natural gas from/to Canada/Mexico.

[FR Doc. 2013–25939 Filed 10–30–13; 8:45 am]

BILLING CODE 6450–01–P

DEPARTMENT OF ENERGY

State Energy Advisory Board (STEAB)

AGENCY: Energy Efficiency and Renewable Energy, Department of Energy.

ACTION: Notice of open meeting.

SUMMARY: This notice announces a Board meeting of the State Energy Advisory Board (STEAB). The Federal Advisory Committee Act (Pub. L. 92–463; 86 Stat.770) requires that public notice of these meetings be announced in the **Federal Register**.

DATES: December 3, 2013: 9:00 a.m. to 5:00 p.m.; December 4, 2013 9:00 a.m. to 5:00 p.m.

ADDRESSES: The Fairfax at Embassy Row, 2100 Massachusetts Ave. NW., Washington, DC 20008.

FOR FURTHER INFORMATION CONTACT: Julie Hughes, STEAB Designated Federal Officer, U.S. Department of Energy, Office of Energy Efficiency and Renewable Energy, 1000 Independence Ave. SW., Washington, DC 20585; telephone: (202) 320–9703, or by email at: *Julie.Hughes@ee.doe.gov*.

SUPPLEMENTARY INFORMATION:

Purpose of the Board: To make recommendations to the Assistant Secretary for the Office of Energy Efficiency and Renewable Energy regarding goals and objectives, programmatic and administrative policies, and to otherwise carry out the Board's responsibilities as designated in the State Energy Efficiency Programs Improvement Act of 1990 (Pub. L. 101–440).

Tentative Agenda: Receive in-person updates and reviews of accomplishment of STEAB's Subcommittee and Taskforces, meet with key members of DOE's Office of Energy Efficiency and Renewable Energy (EERE) to discuss current initiatives and programs, participate in round-table discussions with EERE Program Directors, explore energy innovative financing options, discuss strategic planning opportunities, and update the Board on routine business matters and other topics of interest.

Public Participation: The meeting is open to the public. Written statements may be filed with the Board either before or after the meeting. Members of the public who wish to make oral statements pertaining to agenda items should contact Julie Hughes at the address or telephone number listed above. Requests to make oral comments must be received five days prior to the meeting; reasonable provision will be made to include requested topic(s) on the agenda. The Chair of the Board is empowered to conduct the meeting in a fashion that will facilitate the orderly conduct of business.

Minutes: The minutes of the meeting will be available for public review and copying within 90 days on the STEAB Web site, *www.steab.org.*

Issued at Washington, DC, on October 24, 2013.

LaTanya Butler,

Deputy Committee Management Officer.

[FR Doc. 2013–25792 Filed 10–30–13; 8:45 am]

BILLING CODE 6450–01–P

DEPARTMENT OF ENERGY

Federal Energy Regulatory Commission

[Project No. 13629–002]

Coleman Hydro, LLC; Notice of Application Ready for Environmental Analysis and Soliciting Comments, Recommendations, Terms and Conditions, and Prescriptions

Take notice that the following hydroelectric application has been filed with the Commission and is available for public inspection.

a. *Type of Application:* Minor Original License.

b. *Project No.:* 13629–002.

c. *Date filed:* April 22, 2011.

d. *Applicant:* Coleman Hydro, LLC.

e. *Name of Project:* Coleman Hydroelectric Project.

f. *Location:* On Little Timber Creek near the Town of Leodore in Lemhi County, Idaho. The project would be located on private lands.

g. *Filed Pursuant to:* Federal Power Act, 16 U.S.C. 791 (a)–825(r).

h. *Applicant Contact:* Mr. Nicholas E. Josten, c/o Geosense, 2742 Saint Charles Avenue, Idaho Falls, ID 83404; (208) 528–6152; email—*gsense@cableone.net.*

i. *FERC Contact:* Joseph Hassell at (202) 502–8079; or email at *joseph.hassell@ferc.gov.*

j. *Deadline for filing comments, recommendations, terms and conditions, and prescriptions:* 60 days from the issuance date of this notice; reply comments are due 105 days from the issuance date of this notice.

The Commission strongly encourages electronic filing. Please file motions to intervene and protests, comments, terms and conditions, recommendations, and prescriptions using the Commission's eFiling system at *http://www.ferc.gov/docs-filing/efiling.asp.* Commenters can submit brief comments up to 6,000 characters, without prior registration, using the eComment system at *http://www.ferc.gov/docs-filing/ecomment.asp.* You must include your name and contact information at the end of your comments. For assistance, please contact FERC Online Support at *FERCOnlineSupport@ferc.gov,* (866) 208–3676 (toll free), or (202) 502–8659 (TTY). In lieu of electronic filing, please send a paper copy to: Secretary, Federal Energy Regulatory Commission, 888 First Street NE., Washington, DC 20426. The first page of any filing should include docket number P–13629–002.

The Commission's Rules of Practice require all intervenors filing documents with the Commission to serve a copy of that document on each person on the official service list for the project. Further, if an intervenor files comments or documents with the Commission relating to the merits of an issue that may affect the responsibilities of a particular resource agency, they must also serve a copy of the document on that resource agency.

k. This application has been accepted and is now ready for environmental analysis.

l. The proposed project would use the water from two existing irrigation diversions from Little Timber Creek, and would consist of the following new facilities: (1) A new intake structure and fish screen; (2) a new 26,700-foot-long penstock; (3) a powerhouse containing a 750-kilowatt Pelton turbine and 750-kilowatt generator; (4) a new 6.7-mile-long, 12.5-kilovolt electric transmission line; and (5) appurtenant facilities. The project would produce an estimated 2,200 megawatt-hours annually.

The proposed project would use water that currently flows into two unlined irrigation ditches that divert water from Little Timber Creek. The project would combine those two diversions into a single diversion at a new screened intake. The location of the new intake structure would be at the same location as the most downstream ditch diversion. Water would flow through the new intake structure into a 26,700-foot-long steel and plastic penstock to the powerhouse. After passing through the powerhouse, the water would be used for irrigation.

m. A copy of the application is available for review at the Commission in the Public Reference Room or may be viewed on the Commission's Web site at *http://www.ferc.gov* using the ''eLibrary'' link. Enter the docket number excluding the last three digits in the docket number field to access the document. For assistance, contact FERC Online Support. A copy is also available for inspection and reproduction at the address in item h above.

All filings must (1) bear in all capital letters the title ''COMMENTS'', ''REPLY COMMENTS'', ''RECOMMENDATIONS,'' ''TERMS AND CONDITIONS,'' or ''PRESCRIPTIONS;'' (2) set forth in the heading the name of the applicant and the project number of the application to which the filing responds; (3) furnish the name, address, and telephone number of the person submitting the filing; and (4) otherwise comply with the requirements of 18 CFR 385.2001 through 385.2005. All comments, recommendations, terms and conditions or prescriptions must set forth their evidentiary basis and otherwise comply with the requirements of 18 CFR 4.34(b). Agencies may obtain copies of the application directly from the applicant. Each filing must be accompanied by proof of service on all persons listed on the service list prepared by the Commission in this proceeding, in accordance with 18 CFR 4.34(b), and 385.2010.

You may also register online at *http://www.ferc.gov/docs-filing/esubscription.asp* to be notified via email of new filings and issuances related to this or other pending projects. For assistance, contact FERC Online Support.

n. Public notice of the filing of the initial development application, which has already been given, established the due date for filing competing applications or notices of intent. Under the Commission's regulations, any competing development application must be filed in response to and in compliance with public notice of the initial development application. No competing applications or notices of intent may be filed in response to this notice.

o. *Procedural Schedule:*

The application will be processed according to the following revised Hydro Licensing Schedule. Revisions to the schedule may be made as appropriate.

Milestone	Target date
Filing of Comments, Recommendations, Terms and Conditions, and Prescriptions	December 24, 2013.
Filing of Reply Comments	February 7, 2014.
Commission issues EA	May 8, 2014.

p. A license applicant must file no later than 60 days following the date of issuance of this notice: (1) A copy of the water quality certification; (2) a copy of the request for certification, including proof of the date on which the certifying agency received the request; or (3) evidence of waiver of water quality certification.

Dated: October 24, 2013.

Kimberly D. Bose,

Secretary.

[FR Doc. 2013–25855 Filed 10–30–13; 8:45 am]

BILLING CODE 6717–01–P

DEPARTMENT OF ENERGY

Federal Energy Regulatory Commission

[Docket No. EL14–6–000]

City of Pella, Iowa v. Midcontinent Independent System Operator, Inc., Mid-American Energy Company; Notice of Complaint

Take notice that on October 23, 2013, pursuant to section 206 of the Federal Power Act (FPA), 16 U.S.C. 824e and Rule 206 of the Federal Energy Regulatory Commission's (Commission) Rules of Practice and Procedure, 18 CFR 385.206 (2013), The City of Pella, Iowa (Complainant) filed a formal complaint against Midcontinent Independent System Operator, Inc. and MidAmerican Energy Company (collectively, Respondents), requesting that the Commission enforce the terms of the settlement agreement approved by the Commission on July 16, 2012, in Docket Nos. EL10–77–000 and EL10–77–001.[1] In addition, or in the alternative, the Complainant requests that the Commission find that Midcontinent Independent System Operator, Inc. unjustly and unreasonably violated the FPA by refusing to compensate the Complainant for operating generation for grid support.

Any person desiring to intervene or to protest this filing must file in accordance with Rules 211 and 214 of the Commission's Rules of Practice and Procedure (18 CFR 385.211, 385.214). Protests will be considered by the Commission in determining the appropriate action to be taken, but will not serve to make protestants parties to the proceeding. Any person wishing to become a party must file a notice of intervention or motion to intervene, as appropriate. The Respondent's answer and all interventions, or protests must be filed on or before the comment date. The Respondent's answer, motions to intervene, and protests must be served on the Complainants.

The Commission encourages electronic submission of protests and interventions in lieu of paper using the ''eFiling'' link at *http://www.ferc.gov.* Persons unable to file electronically should submit an original and 5 copies of the protest or intervention to the Federal Energy Regulatory Commission, 888 First Street NE., Washington, DC 20426.

This filing is accessible on-line at *http://www.ferc.gov,* using the ''eLibrary'' link and is available for review in the Commission's Public Reference Room in Washington, DC. There is an ''eSubscription'' link on the Web site that enables subscribers to receive email notification when a document is added to a subscribed docket(s). For assistance with any FERC Online service, please email *FERCOnlineSupport@ferc.gov,* or call (866) 208–3676 (toll free). For TTY, call (202) 502–8659.

Comment Date: 5:00 p.m. Eastern Time on November 12, 2013.

Dated: October 24, 2013.

Kimberly D. Bose,

Secretary.

[FR Doc. 2013–25854 Filed 10–30–13; 8:45 am]

BILLING CODE 6717–01–P

[1] *City of Pella, Iowa* v. *Midcontinent Independent System Operator, Inc. and MidAmerican Energy Company,* 140 FERC ¶ 61,029 (2012).

ENVIRONMENTAL PROTECTION AGENCY

[FRL–9902–21–ORD; Docket ID No. EPA–HQ–ORD–2013–0723]

Best Practices for Continuous Monitoring of Temperature and Flow in Wadeable Streams

AGENCY: Environmental Protection Agency (EPA).

ACTION: Notice of public comment period and letter peer review.

SUMMARY: EPA is announcing a 30-day public comment period for the draft document titled, ''Best Practices for Continuous Monitoring of Temperature and Flow in Wadeable Streams'' (EPA/600/R–13/170). The EPA also is announcing that either ERG or Versar,

EPA contractors for external scientific peer review, will select an independent group of experts to conduct a letter peer review of the draft document. The document was prepared by the National Center for Environmental Assessment (NCEA) within EPA's Office of Research and Development. The report describes best practices for the deployment of continuous temperature and flow sensors in wadeable streams. This document addresses questions related to equipment needs, configuration, placement, installation techniques, data retrieval, and data processing.

EPA is releasing the draft report for the purposes of public comment and peer review. The draft document is available via the Internet on the NCEA home page under the Recent Additions and the Data and Publications menus at *www.epa.gov/ncea.* This draft report is not final as described in EPA's information quality guidelines, and does not represent and should not be construed to represent Agency policy or views. EPA intends to forward the public comments that are submitted in accordance with this notice to the external peer reviewers for their consideration during the letter review. When finalizing the draft document, EPA intends to consider any public comments that EPA receives in accordance with this notice.

DATES: The 30-day public comment period begins October 31, 2013, and ends December 2, 2013. Technical comments should be in writing and must be received by EPA by December 2, 2013.

ADDRESSES: The draft document, ''Best Practices for Continuous Monitoring of Temperature and Flow in Wadeable Streams,'' is available primarily via the Internet on the NCEA home page under the Recent Additions and the Data and Publications menus at *www.epa.gov/ncea.* A limited number of paper copies will be available from the Information Management Team, NCEA; telephone: 703–347–8561; facsimile: 703–347–8691. If you are requesting a paper copy, please provide your name, mailing address, and the document title, ''Best Practices for Continuous Monitoring of Temperature and Flow in Wadeable Streams,'' (EPA/600/R–13/170) to facilitate processing of your request.

Comments may be submitted electronically via *www.regulations.gov,* by mail, by facsimile, or by hand delivery/courier. Please follow the detailed instructions provided in the **SUPPLEMENTARY INFORMATION** section of this notice.

FOR FURTHER INFORMATION CONTACT: For information on the public comment period, contact the ORD Docket at the EPA Headquarters Docket Center; telephone: 202–566–1752; facsimile: 202–566–9744; or email: *Docket_ORD@epa.gov.*

For technical information, contact Dr. Britta Bierwagen, NCEA; telephone: 703–347–8613; facsimile: 703–347–8694; or email: *bierwagen.britta@epa.gov.*

SUPPLEMENTARY INFORMATION:

I. Information About the Project/Document

The lack of continuous temperature and flow data for minimally disturbed, free-flowing freshwater wadeable streams is an impediment to analyses of long-term trends in biological, thermal, and hydrologic data. In recent years, there has been substantial interest in developing regional monitoring networks with states and EPA regional offices to detect long-term climate change-related impacts on aquatic communities in freshwater streams. Current participants, including states in the Northeast, Mid-Atlantic and Southeast, are initiating collection of thermal, hydrologic, and biological data from targeted sites in each state. To help further this effort, EPA and collaborators have written a best practices document to facilitate more uniform and effective collection of continuous temperature and water depth data at ungaged sites in wadeable streams. This document addresses questions related to equipment needs, configuration, placement, installation techniques, data retrieval, and data processing. The collection of these data will further efforts to detect and track climate change-related impacts over the long term, further our understanding of how thermal, hydrologic, and biological conditions vary spatially and temporally and inter-relate to one another, and help inform state and federal agencies on how to attribute altered environmental conditions to climate change versus other stressors.

II. How To Submit Technical Comments to the Docket at *www.regulations.gov*

Submit your comments, identified by Docket ID No. EPA–HQ–ORD–2013–0723, by one of the following methods:

- *www.regulations.gov:* Follow the on-line instructions for submitting comments.
- *Email: Docket_ORD@epa.gov.*
- *Fax:* 202–566–9744.
- *Mail:* U.S. Environmental Protection Agency, EPA Docket Center (ORD Docket), [Mail Code: 28221T], 1200 Pennsylvania Avenue NW., Washington, DC 20460. The phone number is 202–566–1752. If you provide comments by mail, please submit one unbound original with pages numbered consecutively, and three copies of the comments. For attachments, provide an index, number pages consecutively with the comments, and submit an unbound original and three copies.
- *Hand Delivery:* The ORD Docket is located in the EPA Headquarters Docket Center, EPA West Building, Room 3334, 1301 Constitution Avenue NW., Washington, DC. The EPA Docket Center's Public Reading Room is open from 8:30 a.m. to 4:30 p.m., Monday through Friday, excluding legal holidays. The telephone number for the Public Reading Room is 202–566–1744. Deliveries are only accepted during the docket's normal hours of operation, and special arrangements should be made for deliveries of boxed information. If you provide comments by hand delivery, please submit one unbound original with pages numbered consecutively, and three copies of the comments. For attachments, provide an index, number pages consecutively with the comments, and submit an unbound original and three copies.

Instructions: Direct your comments to Docket ID No. EPA–HQ–ORD–2013–0723. Please ensure that your comments are submitted within the specified comment period. Comments received after the closing date will be marked ''late,'' and may only be considered if time permits. It is EPA's policy to include all comments it receives in the public docket without change and to make the comments available online at *www.regulations.gov,* including any personal information provided, unless a comment includes information claimed to be Confidential Business Information (CBI) or other information whose disclosure is restricted by statute. Do not submit information that you consider to be CBI or otherwise protected through *www.regulations.gov* or email. The *www.regulations.gov* Web site is an ''anonymous access'' system, which means EPA will not know your identity or contact information unless you provide it in the body of your comment. If you send an email comment directly to EPA without going through *www.regulations.gov,* your email address will be automatically captured and included as part of the comment that is placed in the public docket and made available on the Internet. If you submit an electronic comment, EPA recommends that you include your name and other contact information in the body of your comment and with any disk or CD–ROM you submit. If EPA cannot read your comment due to technical difficulties

and cannot contact you for clarification, EPA may not be able to consider your comment. Electronic files should avoid the use of special characters, any form of encryption, and be free of any defects or viruses. For additional information about EPA's public docket visit the EPA Docket Center home page at *www.epa.gov/epahome/dockets.htm.*

Docket: Documents in the docket are listed in the *www.regulations.gov* index. Although listed in the index, some information is not publicly available, e.g., CBI or other information whose disclosure is restricted by statute. Certain other materials, such as copyrighted material, are publicly available only in hard copy. Publicly available docket materials are available either electronically at *www.regulations.gov* or in hard copy at the ORD Docket in the EPA Headquarters Docket Center.

Dated: October 23, 2013.

Abdel-Razak M. Kadry,

Acting Director, National Center for Environmental Assessment.

[FR Doc. 2013–25845 Filed 10–30–13; 8:45 am]

BILLING CODE 6560–50–P

FEDERAL COMMUNICATIONS COMMISSION

[WT Docket No. 13–240; DA 13–1980]

Comment Sought on Scoping Document for Development of a Proposed Program Comment To Govern Review of Positive Train Control Facilities Under Section 106 of the National Historic Preservation Act

AGENCY: Federal Communications Commission.

ACTION: Notice.

SUMMARY: The Wireless Telecommunications Bureau (Bureau) of the Federal Communications Commission (FCC) seeks public comment in connection with the development of a proposed Program Comment to govern review for the construction of positive train control (PTC) wayside facilities under section 106 of the National Historic Preservation Act (NHPA). The ideas the Bureau is considering for the potential Program Comment are described in the referenced Supplementary Information.

DATES: Comments are due on November 15, 2013.

ADDRESSES: You may submit comments, identified by WT Docket No. 13–240; DA 13–1980, by any of the following methods:

Federal Communications Commission's Web site: http://fjallfoss.fcc.gov/ecfs2/. Follow the instructions for submitting comments.

Mail: Filings can be sent by hand or messenger delivery, by commercial overnight courier, or by first-class or overnight U.S. Postal Service mail. All filings must be addressed to the Commission's Secretary, Office of the Secretary, Federal Communications Commission.

People With Disabilities: Contact the FCC to request reasonable accommodations (accessible format documents, sign language interpreters, CART, etc.) by email: *FCC504@fcc.gov* or phone: 202–418–0530 or TTY: 202–418–0432.

For detailed instructions for submitting comments and additional information on the rulemaking process, see the **SUPPLEMENTARY INFORMATION** section of this document.

FOR FURTHER INFORMATION CONTACT:

- Stephen Del Sordo, (202) 418–1986 or *stephen.delsordo@fcc.gov,* or Anne Marie Wypijewski, (717) 338–2508 or *annemarie.wypijewski@fcc.gov.* Media contact: Cecilia Sulhoff, (202) 418–0587 or *cecelia.sulhoff@fcc.gov.* Jeffrey Steinberg, Deputy Chief of the Spectrum and Competition Policy Division, at *Jeffrey.Steinberg@fcc.gov* or 202–418–0896.
- Geoffrey Blackwell, Chief of the FCC's Office of Native Affairs and Policy, at *Geoffrey.Blackwell@fcc.gov* or 202–418–3629; or
- Irene Flannery, Deputy Chief of the FCC's Office of Native Affairs and Policy, at *Irene.Flannery@fcc.gov* or 202–418–1307.

SUPPLEMENTARY INFORMATION: This is a summary of the Commission's Public Notice in WT Docket No. 13–240; DA 13–1980, released on September 27, 2013. The full text of this document is available for public inspection and copying during regular business hours in the FCC Reference Center, Federal Communications Commission, 445 12th Street SW., Room CY–B402, Washington, DC 20554. Alternative formats are available for people with disabilities (Braille, large print, electronic files, audio format), by sending an email to *fcc504@fcc.gov* or calling the Commission's Consumer and Governmental Affairs Bureau at (202) 418–0530 (voice), (202) 418–0432 9TTY). Program Comment For Planned Construction of Positive Train Control Facilities Within The Railroad Bed section 106 Scoping Document. The Federal Communications Commission (FCC) invites the participation of State Historic Preservation Officers (SHPOs), the historic preservation community, and other stakeholders in developing a proposed Program Comment, pursuant to § 800.14(e) of the rules of the Advisory Council on Historic Preservation (ACHP), 36 CFR part 800, to facilitate the review process under section 106 of the National Historic Preservation Act (NHPA), 16 U.S.C. 470f, for the infrastructure required for Positive Train Control (PTC). The FCC is the lead, or action, federal agency because the construction of PTC facilities requires the use of radio spectrum that is licensed by the FCC. Our process for developing the Program Comment includes government-to-government consultation with federally recognized Indian Tribes in accordance with § 800.14(e)(4) and (f) of the ACHP rules and in accordance with the trust relationship we share with sovereign Tribal Nations as outlined in the FCC's *Statement of Policy on Establishing a Government-to-Government Relationship With Indians Tribes* (16 FCC Rcd 4078, 4081 (2000)).

The purpose of this scoping document is to inform and engage all stakeholders in this important process. The FCC will also release a document substantively identical to this document to initiate formal consultation on the development of the proposed Program Comment with federally recognized Tribal Nations. This document provides a statement of purpose, background on PTC, an overview of PTC infrastructure, an explanation of compliance with section 106 for PTC infrastructure, a discussion of ideas for the proposed Program Comment, a description of next steps, and FCC contact information.

Purpose

PTC will enable the railroads to improve the safety of freight and passenger train operations by preventing derailments, incursions into work zones, and collisions. The FCC's goal, through Tribal consultation and engagement with the ACHP, SHPOs and stakeholders, is to develop an efficient, practical, and timely review process that ensures full consideration of the effects of PTC facilities on historic properties, including Tribal religious and cultural sites.

Congress mandated that the railroads complete PTC deployment by December 31, 2015. To meet this statutory mandate, the railroads are preparing to install more than 20,000 wayside poles nationwide within the existing railroad bed alongside existing tracks. The freight railroads intend to install wayside poles approximately one to two miles apart along their tracks and at certain switch points and other operational sites. Nearly all of the wayside poles are expected to be

between 25 and 65 feet in height, including the antenna. The depth of the poles' foundations will vary from 5 to 10 feet or in some instances up to 15 feet, depending on site conditions. The foundation holes will be created by drilling and will vary from 12 to 15 inches in diameter.

Until recently, the FCC understood that most of the wayside PTC antennas would be installed on existing infrastructure. By May 2013, however, it became clear that most of the wayside facilities, with some exceptions mainly in urban areas, would require new poles. Due to the impending statutory deadline, the railroads have stated that they must begin general deployment of these facilities by early 2014. Accordingly, the FCC seeks the cooperation of all interested parties to develop a Program Comment on an expedited basis. Our goal is to deliver a draft Program Comment to the ACHP for approval in accordance with its procedures by mid-December 2013.

Some of the railroads have also requested to begin deployment of PTC poles along specific segments of track during 2013, prior to development of a draft Program Comment. The FCC believes that by conducting early, focused reviews in limited geographic areas, we can gain valuable experience that will provide useful information for the proposed Program Comment. These early reviews will also help illuminate the extent to which PTC installations have the potential to cause adverse effects. As a central feature of these early reviews, we have scheduled consultative meetings with Tribal Nations that have an interest in the relevant geographic areas in Tulsa, Oklahoma, and in Rapid City, South Dakota. These meetings will enable the FCC and Tribal Nations to share and hear each others' perspectives while working through the issues together in an actual, real world context. In addition to working sessions in which the railroads are expected to participate, these meetings will include government-to-government consultation sessions directly between the FCC and Tribal Nations. The FCC will also schedule appropriate opportunities for SHPOs and other interested parties to participate in the demonstration reviews. We anticipate this process will inform all stakeholders of the important issues involved in the critically important aspects of deploying of PTC, complying with the section 106 process, and promulgating the proposed Program Comment.

Background

PTC is mandated by the Rail Safety Improvement Act of 2008, Public Law 110–432, which requires all of the major freight and passenger railroads to deploy PTC systems along most segments of their track by December 31, 2015. Congress enacted the PTC requirement following an accident in Chatsworth, California, that resulted in 25 deaths and injuries to more than 135 passengers. Utilizing radio signals between the locomotive and a land-based network, PTC is capable of remotely controlling or stopping a train that is traveling at an unsafe speed or is approaching danger. PTC will thus safeguard human life and property by preventing injuries, hazardous material spills, and property damage caused by preventable train collisions and over-speed derailments.

PTC involves the construction of facilities in order to use radio spectrum that is licensed by the FCC. Therefore, the FCC considers the installation of PTC infrastructure to be an FCC undertaking under the NHPA. As such, the FCC is required to take into account the potential impacts of PTC facilities on historic properties. To meet that obligation, we are developing this Program Comment pursuant to ACHP procedures.

PTC Infrastructure

In many respects, the wayside poles are similar in height, diameter, and depth of foundation to utility poles used to support electric, telephone, and broadband cables. In general, the wayside structures will be specialized metal poles affixed to a concrete or metal foundation at ground level. Many of the wayside poles contain a pivot point that will permit small crews to swing the pole down for maintenance and repairs, thus avoiding the need for crews to climb the poles. At some installations, the communications gear will be affixed to the pole and a small platform will be placed at the base for staging. In other cases, this equipment will be placed in a new or existing small shelter which will be connected to the pole using power and fiber cable connections buried in a shallow trench. The railroads intend to use existing equipment shelters where possible to reduce the fiscal and environmental impacts of PTC.

The wayside poles will be installed in holes typically 5 to 10 feet in depth, although they may be up to 15 feet deep in certain limited situations. The depth of foundation for each pole will depend on the pole's height, soil conditions, and local safety regulations. The holes will be bored by a mechanical arm extending from equipment traveling on the railroad or an existing access road. Many of the foundations will be installed using a helical method through which the pole is screwed directly into the ground with minimal excavation of soil. In other cases, the hole may be excavated using an auger method before the foundation is inserted. Installation will require no ground disturbance other than the foundation hole, a concrete pad for the equipment shelter (where needed) or staging platform, and a shallow trench to connect the wayside pole to an equipment shelter or other wayside facility. Virtually all of the poles will be placed in the ballasted roadbed of the railway on ground that has been disturbed by railroad construction and ongoing maintenance. However, in some cases, the depth of the foundation hole may exceed the depth of the previous disturbance.

The railroads have already determined proposed sites for most of their PTC facilities based on the technical requirements of PTC. Due to the system's technical requirements, the railroads state, there is typically little flexibility in these locations. The railroads have told the FCC that there might be opportunities to move some of the wayside poles over short distances. However, those determinations will have to be site-specific based on the technical requirements for the entire system.

In addition to the wayside poles, the railroads will need to install between 3,000 and 4,000 antennas, typically at heights of 100 to 150 feet, to serve as base stations. These base stations will typically be located farther away from the track. While some of the base station antennas will require new tower construction, the railroads have projected that the majority will be collocated on existing structures. The FCC intends that section 106 review of the new base station structures, as well as collocations to the extent required will be conducted under existing FCC regulations and procedures. Thus, we do not intend for the proposed Program Comment to cover these base station facilities.

Compliance With Section 106 for PTC Infrastructure

The FCC is committed to protecting historic properties under the NHPA, including properties that have religious and cultural significance for Tribal Nations. The FCC has an efficient and successful section 106 review process. The FCC's rules require that applicants follow the ACHP's section 106 regulations, as modified by two

Nationwide Programmatic Agreements executed by the Commission with the ACHP and National Conference of State Historic Preservation Officers (47 CFR part 1, Appendices B and C), to ascertain whether proposed facilities may affect historic properties. Among other things, the FCC maintains an electronic system, the Tower Construction Notification System (TCNS) to ensure that federally recognized Indian Tribes receive timely notice of projects proposed in their geographic areas of concern and to engage them in the review. The FCC also maintains a companion system, E106, which may be used to transmit the required documentation to the SHPOs and other interested parties.

The mandated completion date for PTC and the volume of wayside poles required present challenges to all of those involved in the FCC's existing section 106 process. In each of the past few years, the FCC and its preservation partners have completed the section 106 process for between 10,000 and 12,000 projects. PTC will approximately double that number over each of the next two years, thereby straining the resources of all participants in the process. Moreover, due to the location and physical characteristics of the facilities, the potential for PTC wayside poles to cause adverse effects to historic properties is not likely to be the same as for typical communications towers. In recognition of these facts, the ACHP has recommended that the FCC work with the ACHP and its preservation partners to develop efficiencies that are tailored to the review of PTC wayside facilities, to be memorialized in a Program Comment.

A Program Comment, once approved by the ACHP, would identify alternative section 106 procedures for an applicant to follow in order to ascertain, as required by § 1.1307(a)(4) of the FCC's rules, whether proposed PTC wayside facilities may affect historic properties that are listed or eligible for listing in the National Register for Historic Places, including steps to ensure that Tribal Nations have a full opportunity to participate in review. The Program Comment would not override the FCC's general obligation to consult with federally recognized Tribal Nations under the section 106 process, absent the Tribe's consent that consultation is unneeded.

Program Comment

The FCC has identified several areas in which a Program Comment might appropriately tailor the section 106 process to the review of PTC wayside facilities. Please note that the ideas set forth below are intended to scope issues at a pre-decisional and early point in the process to facilitate productive dialogue, and do not represent decisions that the FCC has already made.

Submission Process. Both TCNS and E106 are designed to accept proposed constructions on a site-by-site basis. In recognition of the large number of wayside facilities and the linear nature of PTC deployment, the FCC is developing a process for each railroad to submit multiple adjacent sites through these systems in a single filing. This batching process is intended only to improve processing efficiency, not to affect substantively the Section 106 review of proposed sites submitted in a single filing. For TCNS, the sites will likely be batched by county to match the way that Tribal Nations typically identify their areas of interest. E106 and other SHPO submissions may also best be batched by county to facilitate functional efficiencies between the systems. We invite input on how the batching process may be made to work best for all parties participating in Section 106 review. In order to gain experience with this process, the FCC proposes to use batched submissions for the demonstration projects that will begin in 2013. We will soon be contacting the affected Tribal Nations and SHPOs to discuss the mechanics of this process that we propose for the demonstration projects.

Exclusions. The FCC's current regulations require that applicants follow ACHP procedures, as modified by the Nationwide Programmatic Agreements, to ascertain whether proposed facilities may affect historic properties. Those Agreements permit SHPOs, with the consent of Tribal Nations, to identify areas that might be excluded from Section 106 review for communications towers. The FCC believes it would be useful to explore procedures for establishing such exclusions in a more systematic manner for PTC facilities located along appropriate segments of track. For example, some SHPOs have told the FCC that they consider railroad lines to be industrial corridors and that they expect active construction and installations in disturbed areas within these corridors. In order to define excluded activities, SHPOs and Tribal Nations will need to identify circumstances, and geographic areas, if they exist, where adverse effects to historic properties are unlikely to occur. Factors to consider in defining exclusions may include the depth of previous soil disturbance relative to the depth of planned excavations in the area, the nature of any human presence prior to the railroad, and the proximity of sensitive historic sites. For example, we would not expect to exclude a segment of rail line that runs on top of a known village site or close to a religious or cultural site. We recognize that the potential for exclusions may vary by region depending on many factors. Nonetheless, PTC facilities in certain portions of the Nation's railway bed may be excludable from routine section 106 review through this cooperative process.

Scope of Review. For those constructions that are not excluded from section 106 review, the FCC anticipates that the scope of review would be generally similar to that specified under the existing Nationwide Programmatic Agreements. We invite ideas as to any efficiencies that may be appropriate for PTC wayside poles. For example, in light of the relatively short height and narrow profile of these poles, as well as their location near railroad tracks, are there circumstances where the Area of Potential Effects (APE) for visual effects should be less than the ½ mile radius specified in the Nationwide Programmatic Agreement for all towers less than 200 feet in height? Are there circumstances where it would be efficient for the railroads to consider a linear APE along the track rather than a separate APE for each pole? Is it necessary to assess effects where the only historic property within the APE is the track itself and there are no special features within the APE?

Review Process. The FCC recognizes that the process for reviewing the effects of proposed constructions on historic properties is unique to each construction and to each SHPO or Tribal Nation, and we are wary of unduly constraining their flexibility. However, we invite any ideas for efficiencies in the review process. In particular, we welcome thoughts on whether voluntary best practices or protocols might provide useful guidance on any aspects of review, including response times, identification of sites where monitoring of construction is necessary, and coordination where multiple parties request monitoring. Would voluntary best practices or protocols also be useful to help Tribal representatives determine appropriate compensation when acting in the capacity of a consultant, in accordance with ACHP guidance?

Avoidance and Mitigation. Based on experience with the construction of towers for communications carriers, the FCC anticipates that a small percentage of the wayside poles will have adverse effects on historic properties and Tribal sites of religious and cultural significance. When adverse effects are

determined, ACHP rules require the action agency to consider avoidance, minimization, and mitigation. In the case of wayside poles, there will often be little potential for avoidance or minimization due to the limited flexibility to move the poles. We invite input as to whether it would be appropriate for the Program Comment to specify a simple protocol to quickly consider whether avoidance is possible at a particular site. Where avoidance is not possible, the FCC ordinarily works with the SHPO, affected Tribal Nations, and other consulting parties to find mitigation measures that provide a public benefit. We seek suggestions as to standard mitigation measures, either site-specific or programmatic, that might facilitate this negotiation process in appropriate cases.

Next Steps and Contact Information

The FCC will follow with information regarding meetings, webinars, or other structured opportunities for dialogue on the proposed Program Comment. This will include information about participation in the upcoming demonstration reviews. In the meantime, we welcome ideas from all interested parties and are happy to meet or talk with you.

Pursuant to §§ 1.415 and 1.419 of the Commission's rules, 47 CFR 1.415, 1.419, interested parties may file comments and reply comments on or before the dates indicated on the first page of this document. Comments may be filed using the Commission's Electronic Comment Filing System (ECFS). *See Electronic filing of documents in rules making proceedings, 63 FR 24121 (1998).*

- *Electronic Filers:* Comments may be filed electronically using the Internet by accessing the ECFS: *http://fjallfoss.fcc.gov/ecfs2/.*
- *Paper Filers:* Parties who choose to file by paper should file an original and one copy of each filing. If more than one docket or rulemaking number appears in the caption of this proceeding, filers should submit two additional copies for each additional docket or rulemaking number.

Filings can be sent by hand or messenger delivery, by commercial overnight courier, or by first-class or overnight U.S. Postal Service mail. All filings must be addressed to the Commission's Secretary, Office of the Secretary, Federal Communications Commission.

- All hand-delivered or messenger-delivered paper filings for the Commission's Secretary must be delivered to FCC Headquarters at 445 12th Street SW., Room TW–A325, Washington, DC 20554. The filing hours are 8:00 a.m. to 7:00 p.m. All hand deliveries must be held together with rubber bands or fasteners. Any envelopes and boxes must be disposed of *before* entering the building.
- Commercial overnight mail (other than U.S. Postal Service Express Mail and Priority Mail) must be sent to 9300 East Hampton Drive, Capitol Heights, MD 20743.
- U.S. Postal Service first-class, Express, and Priority mail must be addressed to 445 12th Street SW., Washington DC 20554.

Federal Communications Commission.

Jane Jackson,

Associated Chief, Wireless telecommunications Bureau.

[FR Doc. 2013–26000 Filed 10–30–13; 8:45 am]

BILLING CODE 6712–01–P

FEDERAL MINE SAFETY AND HEALTH REVIEW COMMISSION

Sunshine Act Meeting

October 28, 2013.

TIME AND DATE: 2:00 p.m., Wednesday, November 13, 2013.

PLACE: The Richard V. Backley Hearing Room, Room 511N, 1331 Pennsylvania Avenue NW., Washington, DC 20004 (entry from F Street entrance).

STATUS: Open.

MATTERS TO BE CONSIDERED: The Commission will consider and act upon the following in open session: *Secretary of Labor* v. *Twentymile Coal Co.,* Docket Nos. WEST 2008–788–R, et al. (Issues include whether the Administrative Law Judge erred in concluding that violations involving accumulations of coal dust and an inadequate pre-shift examination were ''significant and substantial.'')

Any person attending this meeting who requires special accessibility features and/or auxiliary aids, such as sign language interpreters, must inform the Commission in advance of those needs. Subject to 29 CFR 2706.150(a)(3) and 2706.160(d).

CONTACT PERSON FOR MORE INFO: Jean Ellen (202) 434–9950/(202) 708–9300 for TDD Relay/1–800–877–8339 for toll free.

Emogene Johnson,

Administrative Assistant.

[FR Doc. 2013–26042 Filed 10–29–13; 11:15 am]

BILLING CODE 6735–01–P

FEDERAL MINE SAFETY AND HEALTH REVIEW COMMISSION

Sunshine Act Meeting

October 28, 2013.

TIME AND DATE: 10:00 a.m., Wednesday, November 13, 2013.

PLACE: The Richard V. Backley Hearing Room, Room 511N, 1331 Pennsylvania Avenue NW., Washington, DC 20004 (entry from F Street entrance).

STATUS: Open.

MATTERS TO BE CONSIDERED: The Commission will hear oral argument in the matter *Secretary of Labor* v. *Twentymile Coal Co.,* Docket Nos. WEST 2008–788–R, et al. (Issues include whether the Administrative Law Judge erred in concluding that violations involving accumulations of coal dust and an inadequate pre-shift examination were ''significant and substantial.'')

Any person attending this oral argument who requires special accessibility features and/or auxiliary aids, such as sign language interpreters, must inform the Commission in advance of those needs. Subject to 29 CFR 2706.150(a)(3) and 2706.160(d).

CONTACT PERSON FOR MORE INFO: Jean Ellen (202) 434–9950/(202) 708–9300 for TDD Relay/1–800–877–8339 for toll free.

Emogene Johnson,

Administrative Assistant.

[FR Doc. 2013–26040 Filed 10–29–13; 11:15 am]

BILLING CODE 6735–01–P

FEDERAL RESERVE SYSTEM

Change in Bank Control Notices; Acquisitions of Shares of a Bank or Bank Holding Company

The notificants listed below have applied under the Change in Bank Control Act (12 U.S.C. 1817(j)) and § 225.41 of the Board's Regulation Y (12 CFR 225.41) to acquire shares of a bank or bank holding company. The factors that are considered in acting on the notices are set forth in paragraph 7 of the Act (12 U.S.C. 1817(j)(7)).

The notices are available for immediate inspection at the Federal Reserve Bank indicated. The notices also will be available for inspection at the offices of the Board of Governors. Interested persons may express their views in writing to the Reserve Bank indicated for that notice or to the offices of the Board of Governors. Comments must be received not later than November 15, 2013.

A. Federal Reserve Bank of Chicago (Colette A. Fried, Assistant Vice President) 230 South LaSalle Street, Chicago, Illinois 60690–1414:

1. *E. David Locke, as Trustee of the E. David Locke Beneficiary Grantor Trust, Middleton, Wisconsin, individually, and as part of a group acting in concert with E. David Locke, E. David Locke, as Trustee of Ahren F. Locke 2004 Grantor Trust, E. David Locke, as Trustee of Brendan S. Locke 2004 Grantor Trust and E. David Locke, as Trustee of Meredith C. Locke 2004 Grantor Trust,* all of Middleton, Wisconsin, to acquire voting shares of Northern Bankshares, Inc., and thereby indirectly acquire voting shares of McFarland State Bank, both in McFarland, Wisconsin.

B. Federal Reserve Bank of Minneapolis (Jacqueline G. King, Community Affairs Officer) 90 Hennepin Avenue, Minneapolis, Minnesota 55480–0291:

1. *Jay Abdo, Bloomington, Minnesota; Melody Borth, Mankato, Minnesota; Jill Hansen, Paul Abdo, and James Abdo, all of Edina, Minnesota; Lynne Abdo, Norwalk, Connecticut; and John Abdo, Saint Paul, Minnesota;* to retain voting shares of Abdo Investments, Inc., and thereby indirectly retain voting shares of Rivers Ridge Holding Company, both in Edina, Minnesota, and BankVista, Sartell, Minnesota.

Board of Governors of the Federal Reserve System, October 28, 2013.

Michael J. Lewandowski,

Associate Secretary of the Board.

[FR Doc. 2013–25936 Filed 10–30–13; 8:45 am]

BILLING CODE 6210–01–P

FEDERAL RESERVE SYSTEM

Change in Bank Control Notices; Acquisitions of Shares of a Savings and Loan Holding Company

The notificants listed below have applied under the Change in Bank Control Act (12 U.S.C. 1817(j)) and the Board's Regulation LL (12 CFR Part 238) to acquire shares of a savings and loan holding company. The factors that are considered in acting on the notices are set forth in paragraph 7 of the Act (12 U.S.C. 1817(j)(7)).

The notices are available for immediate inspection at the Federal Reserve Bank indicated. The notices also will be available for inspection at the offices of the Board of Governors. Interested persons may express their views in writing to the Reserve Bank indicated for that notice or to the offices of the Board of Governors. Comments must be received not later than November 15, 2013.

A. Federal Reserve Bank of Dallas (E. Ann Worthy, Vice President) 2200 North Pearl Street, Dallas, Texas 75201–2272:

1. *Home Federal Bank Employee Stock Ownership Plan and Trust, and James R. Barlow, individually and as co-Trustee of Home Federal Bank Employee Stock Ownership Plan and Trust; and Clyde D. Patterson,* all of Shreveport, Louisiana, individually and as co-Trustee of Home Federal Bank Employee Stock Ownership Plan and Trust, to acquire voting shares of Home Federal Bancorp, Inc. of Louisiana, and thereby indirectly acquire voting shares of Home Federal Bank, both in Shreveport, Louisiana.

Board of Governors of the Federal Reserve System, October 28, 2013.

Michael J. Lewandowski,

Associate Secretary of the Board.

[FR Doc. 2013–25935 Filed 10–30–13; 8:45 am]

BILLING CODE 6210–01–P

FEDERAL RESERVE SYSTEM

Formations of, Acquisitions by, and Mergers of Bank Holding Companies

The companies listed in this notice have applied to the Board for approval, pursuant to the Bank Holding Company Act of 1956 (12 U.S.C. 1841 *et seq.*) (BHC Act), Regulation Y (12 CFR part 225), and all other applicable statutes and regulations to become a bank holding company and/or to acquire the assets or the ownership of, control of, or the power to vote shares of a bank or bank holding company and all of the banks and nonbanking companies owned by the bank holding company, including the companies listed below.

The applications listed below, as well as other related filings required by the Board, are available for immediate inspection at the Federal Reserve Bank indicated. The applications will also be available for inspection at the offices of the Board of Governors. Interested persons may express their views in writing on the standards enumerated in the BHC Act (12 U.S.C. 1842(c)). If the proposal also involves the acquisition of a nonbanking company, the review also includes whether the acquisition of the nonbanking company complies with the standards in section 4 of the BHC Act (12 U.S.C. 1843). Unless otherwise noted, nonbanking activities will be conducted throughout the United States.

Unless otherwise noted, comments regarding each of these applications must be received at the Reserve Bank indicated or the offices of the Board of Governors not later than November 25, 2013.

A. Federal Reserve Bank of Atlanta (Chapelle Davis, Assistant Vice President) 1000 Peachtree Street NE., Atlanta, Georgia 30309:

1. *Southern Community Bancshares, Inc. Employee Stock Ownership Plan,* Cullman, Alabama; to acquire an additional 26.73 percent of the voting shares, for a total of 51 percent of the voting shares, of Southern Community Bancshares, Inc., and thereby indirectly acquire additional voting shares of First Community Bank of Cullman, both in Cullman, Alabama.

B. Federal Reserve Bank of Minneapolis (Jacqueline G. King, Community Affairs Officer) 90 Hennepin Avenue, Minneapolis, Minnesota 55480–0291:

1. *Abdo Investments, Inc., Edina, Minnesota,* to acquire and retain additional voting shares, for a total of 28 percent of the voting shares of Rivers Ridge Holding Company, Edina, Minnesota, and thereby indirectly acquire voting shares of BankVista, Sartell, Minnesota.

Board of Governors of the Federal Reserve System, Dated: October 28, 2013.

Michael J. Lewandowski,

Associate Secretary of the Board.

[FR Doc. 2013–25934 Filed 10–30–13; 8:45 am]

BILLING CODE 6210–01–P

FEDERAL RESERVE SYSTEM

Notice of Proposals To Engage in or To Acquire Companies Engaged in Permissible Nonbanking Activities

The companies listed in this notice have given notice under section 4 of the Bank Holding Company Act (12 U.S.C. 1843) (BHC Act) and Regulation Y, (12 CFR Part 225) to engage *de novo,* or to acquire or control voting securities or assets of a company, including the companies listed below, that engages either directly or through a subsidiary or other company, in a nonbanking activity that is listed in § 225.28 of Regulation Y (12 CFR 225.28) or that the Board has determined by Order to be closely related to banking and permissible for bank holding companies. Unless otherwise noted, these activities will be conducted throughout the United States.

Each notice is available for inspection at the Federal Reserve Bank indicated. The notice also will be available for inspection at the offices of the Board of Governors. Interested persons may express their views in writing on the question whether the proposal complies with the standards of section 4 of the BHC Act.

Unless otherwise noted, comments regarding the applications must be

received at the Reserve Bank indicated or the offices of the Board of Governors not later than November 25, 2013.

A. Federal Reserve Bank of Philadelphia (William Lang, Senior Vice President) 100 North 6th Street, Philadelphia, Pennsylvania 19105–1521:

1. Liberty Centre Bancorp, Inc., Pottsville, Pennsylvania; to merge with and into GNB Financial Services, Inc., Gratz, Pennsylvania, and thereby indirectly acquire voting shares of Liberty Savings Bank, FSB, Pottsville, Pennsylvania, and engage in operating a savings and loan association, pursuant to section 225.28(b)(4)(ii).

Board of Governors of the Federal Reserve System, October 28, 2013.

Michael J. Lewandowski,

Associate Secretary of the Board.

[FR Doc. 2013–25937 Filed 10–30–13; 8:45 am]

BILLING CODE 6210–01–P

FEDERAL TRADE COMMISSION

[File No. 131 0152]

Actavis, Inc. a corporation, and Warner Chilott PLC; Analysis of Agreement Containing Consent Orders To Aid Public Comment

AGENCY: Federal Trade Commission.

ACTION: Proposed Consent Agreement.

SUMMARY: The consent agreement in this matter settles alleged violations of federal law prohibiting unfair or deceptive acts or practices or unfair methods of competition. The attached Analysis to Aid Public Comment describes both the allegations in the draft complaint and the terms of the consent orders—embodied in the consent agreement—that would settle these allegations.

DATES: Comments must be received on or before November 12, 2013.

ADDRESSES: Interested parties may file a comment at *https://ftcpublic.commentworks.com/ftc/activiswarnerconsent* online or on paper, by following the instructions in the Request for Comment part of the **SUPPLEMENTARY INFORMATION** section below. Write ''Actavis Warner, File No. 131 0152'' on your comment and file your comment online at *https://ftcpublic.commentworks.com/ftc/actaviswarnerconsent* following the instructions on the web-based form. If you prefer to file your comment on paper, mail or deliver your comment to the following address: Federal Trade Commission, Office of the Secretary, Room H–113 (Annex D), 600 Pennsylvania Avenue NW., Washington, DC 20580.

FOR FURTHER INFORMATION CONTACT: Keri Wallace (202–326–3085), FTC, Bureau of Competition, 600 Pennsylvania Avenue NW., Washington, DC 20580.

SUPPLEMENTARY INFORMATION: Pursuant to Section 6(f) of the Federal Trade Commission Act, 15 U.S.C. 46(f), and FTC Rule 2.34, 16 CFR 2.34, notice is hereby given that the above-captioned consent agreement containing a consent order to cease and desist, having been filed with and accepted, subject to final approval, by the Commission, has been placed on the public record for a period of thirty (30) days. The following Analysis to Aid Public Comment describes the terms of the consent agreement, and the allegations in the complaint. An electronic copy of the full text of the consent agreement package can be obtained from the FTC Home Page (for September 27, 2013), on the World Wide Web, at *http://www.ftc.gov/os/actions.shtm.* A paper copy can be obtained from the FTC Public Reference Room, Room 130–H, 600 Pennsylvania Avenue NW., Washington, DC 20580, either in person or by calling (202) 326–2222.

You can file a comment online or on paper. For the Commission to consider your comment, we must receive it on or before November 12, 2013. Write ''Actavis Warner, File No. 131 0152'' on your comment. Your comment—including your name and your state—will be placed on the public record of this proceeding, including, to the extent practicable, on the public Commission Web site, at *http://www.ftc.gov/os/publiccomments.shtm.* As a matter of discretion, the Commission tries to remove individuals' home contact information from comments before placing them on the Commission Web site.

Because your comment will be made public, you are solely responsible for making sure that your comment does not include any sensitive personal information, like anyone's Social Security number, date of birth, driver's license number or other state identification number or foreign country equivalent, passport number, financial account number, or credit or debit card number. You are also solely responsible for making sure that your comment does not include any sensitive health information, like medical records or other individually identifiable health information. In addition, do not include any ''[t]rade secret or any commercial or financial information which . . . is privileged or confidential,'' as discussed in Section 6(f) of the FTC Act, 15 U.S.C. 46(f), and FTC Rule 4.10(a)(2), 16 CFR 4.10(a)(2). In particular, do not include competitively sensitive information such as costs, sales statistics, inventories, formulas, patterns, devices, manufacturing processes, or customer names.

If you want the Commission to give your comment confidential treatment, you must file it in paper form, with a request for confidential treatment, and you have to follow the procedure explained in FTC Rule 4.9(c), 16 CFR 4.9(c).[1] Your comment will be kept confidential only if the FTC General Counsel, in his or her sole discretion, grants your request in accordance with the law and the public interest.

Postal mail addressed to the Commission is subject to delay due to heightened security screening. As a result, we encourage you to submit your comments online. To make sure that the Commission considers your online comment, you must file it at *https://ftcpublic.commentworks.com/ftc/actaviswarnerconsent* by following the instructions on the web-based form. If this Notice appears at *http://www.regulations.gov/#!home* you also may file a comment through that Web site.

If you file your comment on paper, write ''Actavis Warner, File No. 131 0152'' on your comment and on the envelope, and mail or deliver it to the following address: Federal Trade Commission, Office of the Secretary, Room H–113 (Annex D), 600 Pennsylvania Avenue NW., Washington, DC 20580. If possible, submit your paper comment to the Commission by courier or overnight service.

Visit the Commission Web site at *http://www.ftc.gov* to read this Notice and the news release describing it. The FTC Act and other laws that the Commission administers permit the collection of public comments to consider and use in this proceeding as appropriate. The Commission will consider all timely and responsive public comments that it receives on or before November 12, 2013. You can find more information, including routine uses permitted by the Privacy Act, in the Commission's privacy policy, at *http://www.ftc.gov/ftc/privacy.htm.*

Analysis of Agreement Containing Consent Order To Aid Public Comment

The Federal Trade Commission (''Commission'') has accepted, subject to

[1] In particular, the written request for confidential treatment that accompanies the comment must include the factual and legal basis for the request, and must identify the specific portions of the comment to be withheld from the public record. *See* FTC Rule 4.9(c), 16 CFR 4.9(c).

final approval, an Agreement Containing Consent Orders (''Consent Agreement'') from Actavis, Inc. (''Actavis'') and Warner Chilcott plc (''Warner Chilcott'') that is designed to remedy the anticompetitive effects of Actavis's proposed acquisition of Warner Chilcott. Under the terms of the proposed Consent Agreement, Actavis would be required to divest to Amneal Pharmaceuticals L.L.C. (''Amneal'') all of Actavis's rights and assets relating to generic versions of the drugs Femcon FE, Loestrin 24 FE, Lo Loestrin FE, and Atelvia. Actavis will also enter into an agreement to supply generic versions of the Femcon FE and Loestrin 24 FE products to Amneal for a period of two years, which Amneal has the option to extend for up to two additional one-year terms if it chooses.

The proposed Consent Agreement has been placed on the public record for thirty days for receipt of comments by interested persons. Comments received during this period will become part of the public record. After thirty days, the Commission will again review the proposed Consent Agreement and the comments received, and will decide whether it should withdraw from the proposed Consent Agreement, modify it, or make final the Decision and Order (''Order'').

Pursuant to a Transaction Agreement dated May 19, 2013, Actavis proposes to acquire Warner Chilcott in a transaction valued at approximately $8.5 billion (''Proposed Acquisition''). The Commission's Complaint alleges that the Proposed Acquisition, if consummated, would violate Section 7 of the Clayton Act, as amended, 15 U.S.C. 18, and Section 5 of the Federal Trade Commission Act, as amended, 15 U.S.C. 45, by lessening competition in the U.S. markets for (1) Generic Femcon FE, (2) Loestrin 24 FE and its generic equivalents, (3) Lo Loestrin FE and its generic equivalents, and (4) Atelvia and its generic equivalents. The proposed Consent Agreement will remedy the alleged violations by replacing the competition that would otherwise be eliminated by the Proposed Acquisition.

The Impact of Generics in Pharmaceutical Markets

In human pharmaceutical product markets, price generally decreases as the number of generic competitors increases. Accordingly, the reduction in the number of suppliers within each relevant market has a direct and substantial effect on pricing. When the first generic version of a drug enters the market, it typically competes by selling at a discount to the branded drug. At that point, the brand typically loses most of its sales to the generic version. During the period in which only one generic product is available, the price for the branded product acts as a ceiling above which the generic manufacturer cannot price its product. In most cases, once additional generic versions of the drug enter the market, competition among the generic competitors drives generic pricing down further. Prices continue to decrease incrementally with the entry of the second, third, fourth, and even fifth generic oral pharmaceutical competitor.

Generic drugs are typically launched upon the expiration of the branded product's patents. If the generic company intends to launch its product before the expiration of the branded product's patents, it must notify the FDA and certify that its product does not infringe the branded company's patent or that the branded company's patents are invalid. This is referred to as a Paragraph IV certification. A Paragraph IV certification typically leads to patent infringement litigation between the generic company and branded company. The first company to file a Paragraph IV ANDA has the right to market its generic drug exclusively for a period of 180 days if it is successful in its litigation against the branded drug manufacturer.[2] No other firm, even those that subsequently submit Paragraph IV ANDAs, may enter the generic market until after the conclusion of this marketing exclusivity period. The prospect of earning higher profits as the only firm marketing a generic version of a drug for 180 days provides an incentive to defend against the patent infringement claims brought by the brand drug manufacturer. Thus, the firm with exclusivity usually takes the leading role, and invests the greatest resources, in these cases.

The Proposed Acquisition Would Reduce the Number of Suppliers in the Four Relevant Markets

Femcon FE is a chewable oral contraceptive tablet that contains progestin and estrogen. Warner Chilcott manufactures and markets the branded version of the drug. Only two companies—Warner Chilcott (via an authorized generic it supplies to Lupin Ltd.[3]) and Actavis—currently sell significant volumes of generic Femcon FE in the United States. Teva Pharmaceutical Industries Ltd. (''Teva'') also has approval from the FDA to sell generic Femcon FE, but it has made only *de minimis* sales of this product since 2011. In 2012, Actavis had approximately 70 percent of generic sales, while Warner Chilcott had approximately 30 percent. Therefore, the proposed acquisition combines two of the three firms approved to supply generic Femcon FE, and the only two significant suppliers of this drug today.

Loestrin 24 FE is a low-dose progestin/estrogen combination oral contraceptive product. Warner Chilcott manufactures and markets the branded version of the drug. No companies currently market a generic version of Loestrin 24 FE. Actavis is likely to be the first generic supplier to compete against Warner Chilcott and no other firm is likely to enter the market for generic Loestrin 24 FE in time to prevent the anticompetitive effects from the Proposed Acquisition.

Lo Loestrin FE is another low-dose progestin/estrogen combination oral contraceptive product. Warner Chilcott manufactures and markets the branded version of the drug. No companies currently market a generic version of Lo Loestrin FE, but Lupin and Actavis each plan to launch a generic product. Both companies are currently engaged in patent litigation with the brand drug manufacturer, but it remains uncertain which firm would receive marketing exclusivity rights from the FDA if it succeeded in defending against Warner Chilcott's claims. Thus, absent the acquisition, Actavis may be the first and only generic competitor to the Warner Chilcott branded product for a period of 180 days.

Atelvia is a delayed-release tablet containing risedronate sodium that is used to treat postmenopausal osteoporosis. Warner Chilcott markets the branded version of the drug. No generic version of the product is currently available in the United States. Actavis, Teva, and Ranbaxy Laboratories Limited all plan to market generic versions of Atelvia, and all three companies are currently engaged in patent litigation with Warner Chilcott. However, uncertainty remains about which one will have marketing exclusivity rights if successful in the litigation. Thus, absent the acquisition, Actavis may be the first and only generic competitor to Warner Chilcott's

[2] Uncertainty occasionally exists regarding whether a Paragraph IV ANDA has been filed properly, which creates uncertainty about whether a company is eligible to receive marketing exclusivity rights from the FDA. In addition, the FDA sometimes determines that more than one company is eligible for market exclusivity rights based on the timing of their filings.

[3] Branded pharmaceutical companies, such as Warner Chilcott, manufacture authorized generic products for sale under a non-brand label at generic prices. In this case, Warner Chilcott has contracted with Lupin to market the authorized generic version of Femcon FE, though in other markets a branded drug company may market its own generic product.

branded product for a period of 180 days.

Entry Into the Relevant Markets

Entry Into the markets for generic Femcon FE, Lo Loestrin 24 and its generic equivalents, Loestrin 24 FE and its generic equivalents, and Atelvia and its generic equivalents would not be timely, likely, or sufficient in magnitude, character, and scope to deter or counteract the anticompetitive effects of the acquisition. *De novo* entry would not take place in a timely manner because the combination of drug development times and FDA approval requirements would delay entry by at least two years. Even companies for which the FDA approval process is well underway face additional barriers, including Hatch-Waxman regulatory exclusivity and pending patent litigation, that prevent them from entering these markets in time to deter the price increases that would occur after consummation of the Proposed Acquisition.

The Anticompetitive Effects of the Acquisition

The Proposed Acquisition would cause significant anticompetitive harm to consumers in the U.S. markets for generic Femcon FE, Lo Loestrin 24 and its generic equivalents, Lo Loestrin FE and its generic equivalents, and Atelvia and its generic equivalents. The Proposed Acquisition would eliminate the current competition between the only two significant suppliers of generic Femcon FE, leading to significantly higher prices for this drug. The acquisition may also delay the onset of beneficial generic competition in the markets for Loestrin 24 FE, Lo Loestrin FE, and Atelvia. Evidence, including information regarding the status of the FDA approval process for potential suppliers of generic Loestrin 24 FE, suggests that Actavis will be the first generic supplier to compete against Warner Chilcott's branded product. Moreover, no other generic supplier is likely to enter the market for a significant period of time. Thus, the combined firm would likely delay the entry of Actavis's generic version of Loestrin 24 FE or, at a minimum, cause Actavis's generic drug to compete less vigorously against Warner Chilcott's branded product, resulting in higher prices for consumers. Similarly, in the markets for Lo Loestrin FE and Atelvia, Actavis may be the first and only generic competitor to Warner Chilcott's branded products for a significant period absent the Proposed Acquisition. By eliminating this potential competition between Warner Chilcott and Actavis in each of these markets, the Proposed Acquisition would harm U.S. consumers by substantially increasing the likelihood of higher post-acquisition prices for Lo Loestrin FE and Atelvia.

The Proposed Consent Agreement

The proposed Consent Agreement effectively remedies the Proposed Acquisition's anticompetitive effects in the relevant markets by requiring Actavis to divest to Amneal certain rights and assets related to generic Femcon FE, generic Loestrin 24 FE, generic Lo Loestrin FE, and generic Atelvia no later than ten days after consummating the acquisition. In addition, the Consent Agreement requires Actavis to enter into a supply agreement to provide Amneal with generic versions of the Femcon FE and Loestrin 24 FE products to sell in the United States for up to four years. Amneal is a New Jersey-based generic pharmaceutical company that currently markets 65 products and maintains an active product development pipeline. With its experience in generic markets, Amneal is well positioned to replicate the competition that would otherwise be lost as a result of the Proposed Acquisition.

If the Commission determines that Amneal is not an acceptable acquirer of the assets to be divested, or that the manner of the divestitures is not acceptable, Actavis must unwind the sale to Amneal and divest the products within six months of the date the Order becomes final, to a Commission-approved acquirer. If Actavis fails to divest the products as required, the Commission may appoint a trustee to divest the products.

The proposed Consent Agreement contains several provisions to help ensure that the divestitures are successful. The Order requires Actavis to maintain the economic viability, marketability, and competitiveness of the divestiture products until such time as they are transferred to Amneal or another Commission-approved acquirer. Actavis must also transfer the manufacturing technology for the divestiture products to Amneal and supply Amneal with the generic Femcon FE and Loestrin 24 FE products during the transition period. In addition, the Consent Agreement requires Actavis to relinquish any claim to marketing exclusivity for generic Lo Loestrin FE and Atelvia products to ensure that the incentives of the companies currently leading the patent litigations relating to those products do not change.

The purpose of this analysis is to facilitate public comment on the proposed Consent Agreement, and it is not intended to constitute an official interpretation of the proposed Order or to modify its terms in any way.

By direction of the Commission.

Donald S. Clark

Secretary.

[FR Doc. 2013–25847 Filed 10–30–13; 8:45 am]

BILLING CODE 6750–01–P

FEDERAL TRADE COMMISSION

Granting of Request for Early Termination of the Waiting Period Under the Premerger Notification Rules

Section 7A of the Clayton Act, 15 U.S.C. 18a, as added by Title II of the Hart-Scott-Rodino Antitrust Improvements Act of 1976, requires persons contemplating certain mergers or acquisitions to give the Federal Trade Commission and the Assistant Attorney General advance notice and to wait designated periods before consummation of such plans. Section 7A(b)(2) of the Act permits the agencies, in individual cases, to terminate this waiting period prior to its expiration and requires that notice of this action be published in the **Federal Register**.

The following transactions were granted early termination—on the dates indicated—of the waiting period provided by law and the premerger notification rules. The listing for each transaction includes the transaction number and the parties to the transaction. The grants were made by the Federal Trade Commission and the Assistant Attorney General for the Antitrust Division of the Department of Justice. Neither agency intends to take any action with respect to these proposed acquisitions during the applicable waiting period.

EARLY TERMINATIONS GRANTED

[September 1, 2013 thru September 30, 2013]

09/03/2013		
20131084	G	Boston Scientific Corporation; C.R. Bard, Inc.; Boston Scientific Corporation.
20131136	G	Cisco Systems, Inc.; Sourcefire, Inc.; Cisco Systems, Inc.
20131205	G	David H. Murdock; Dole Food Company, Inc.; David H. Murdock.
20131211	G	Ronald O. Perelman; Beauty Care Professional Products Participations, S.A.; Ronald O. Perelman.
20131212	G	Rockwool International A/S; CMC Family Holdings LLC; Rockwool International A/S.
09/04/2013		
20131227	G	Pianissimo Holdings Corp.; Steinway Musical Instruments, Inc.; Pianissimo Holdings Corp.
09/05/2013		
20131180	G	Trian Partners Strategic Investment Fund, L.P.; E.I. du Pont de Nemours and Company; Trian Partners Strategic Investment Fund, L.P.
20131181	G	Trian Partners Strategic Investment Fund II, L.P.; E.I. du Pont de Nemours and Company; Trian Partners Strategic Investment Fund II, L.P.
20131187	G	CareGroup, Inc.; The Jordan Health Systems, Inc.; CareGroup, Inc.
20131223	G	Parametric Sound Corporation; VTB Holdings, Inc.; Parametric Sound Corporation.
09/09/2013		
20131225	G	Jeffrey P. Bezos; The Washington Post Company; Jeffrey P. Bezos.
20131226	G	Crestview Partners II (Outbound), L.P.; Sterling Group Partners III (AIV), L.P.; Crestview Partners II (Outbound), L.P.
20131229	G	Allied Motion Technologies Inc.; Safran SA; Allied Motion Technologies Inc.
20131234	G	Crystal T, LLC; Onex Partners II LP; Crystal T, LLC.
20131240	G	ONEOK Partners, L.P.; Merit Energy Company, LLC; ONEOK Partners, L.P.
20131243	G	CH Holding L.P.; Bend Research, Inc.; CH Holding L.P.
09/10/2013		
20131238	G	Francisco Partners III, L.P.; Austin Ventures VIII, L.P.; Francisco Partners III, L.P.
20131242	G	Atlas Copco AB; Edwards Group Limited; Atlas Copco AB.
09/11/2013		
20131192	G	Actelion Ltd.; Ceptaris Therapeutics, Inc.; Actelion Ltd.
20131246	G	loanDepot.com, LLC; imortgage.com, Inc.; loanDepot.com, LLC.
09/12/2013		
20131197	G	Perrigo Company; Elan Corporation, plc; Perrigo Company.
20131198	G	Elan Corporation plc; Perrigo Company; Elan Corporation plc.
20131228	G	KKR European Fund III, Limited Partnership; RigNet, Inc.; KKR European Fund III, Limited Partnership.
20131247	G	Nabors Industries Ltd.; Richard W. Wurster; Nabors Industries Ltd.
20131248	G	Nabors Industries Ltd.; Danny R. Shaffer; Nabors Industries Ltd.
09/13/2013		
20130504	G	Honeywell International Inc.; Intermec, Inc.; Honeywell International Inc.
20131206	G	C.R. Bard, Inc.; Medafor, Inc.; C.R. Bard, Inc.
20131267	G	John S. Chiorando; Personal Communications Devices Holdings LLC; John S. Chiorando.
09/16/2013		
20131224	G	Partners Limited; Entergy Corporation; Partners Limited.
20131262	G	Sterling Group Partners III, L.P.; Century Park Capital Partners II, L.P.; Sterling Group Partners III, L.P.
09/18/2013		
20131263	G	Amgen Inc.; Onyx Pharmaceuticals, Inc.; Amgen Inc.
09/19/2013		
20131254	G	The Madison Square Garden Company; Azoff MSG Entertainment LLC; The Madison Square Garden Company.
09/20/2013		
20131273	G	Providence Equity Partners VII–A L.P.; Shamrock Capital Growth Fund III, L.P.; Providence Equity Partners VII–A L.P.
20131276	G	MDCP VI–A Global Investments LP; Madison Dearborn Capital Partners VI–A, L.P.; MDCP VI–A Global Investments LP.
20131284	G	2349468 Ontario Limited; Ryan A. Busbice; 2349468 Ontario Limited.
20131285	G	Morgan McCague; Ryan A. Busbice; Morgan McCague.

EARLY TERMINATIONS GRANTED—Continued

[September 1, 2013 thru September 30, 2013]

20131287	G	Centerbridge Capital Partners II (Cayman), L.P.; GenNx360 Capital Partners, L.P.; Centerbridge Capital Partners II (Cayman), L.P.
20131288	G	Magellan Health Services, Inc.; Mark V. Mertel and Miriam Mertel; Magellan Health Services, Inc.
09/23/2013		
20131217	G	Verizon Communications Inc.; Telephone and Data Systems, Inc. Voting Trust; Verizon Communications Inc.
09/24/2013		
20131244	G	Arrow Electronics, Inc.; CSS Computer Security Solutions Holding GmbH; Arrow Electronics, Inc.
20131259	G	AstraZeneca PLC; Amplimmune, Inc.; AstraZeneca PLC.
20131271	G	Cisco Systems, Inc.; Whiptail Technologies, Inc.; Cisco Systems, Inc.
20131279	G	Calfrac Well Services Ltd.; Mission Investment Partners, LLC; Calfrac Well Services Ltd.
20131281	G	Oasis Petroleum Inc.; Dawn Arnall; Oasis Petroleum Inc.
20131291	G	Heico Corporation; Lucix Corporation; Heico Corporation.
20131295	G	NM Mariposa Holdings, Inc.; Newton Holding, LLC; NM Mariposa Holdings, Inc.
09/25/2013		
20131253	G	Capital One Financial Corporation; Beech Street Capital Holdings, LLC; Capital One Financial.
20131280	G	Corporation VEPF IV AIV VI, L.P.; QUALCOMM Incorporated; VEPF IV AIV VI, L.P.
09/27/2013		
20130759	G	Mylan Inc.; Strides Arcolab Limited; Mylan Inc.
20130959	S	Actavis, Inc.; Warner Chilcott plc; Actavis, Inc.
20130960	S	Warner Chilcott plc; Actavis, Inc.; Warner Chilcott plc.
20131255	G	FR XII Charlie AIV, L.P.; Utility Services Associates, Inc.; FR XII Charlie AIV, L.P.
20131275	G	LS Power Equity Partners II, L.P.; FirstEnergy Corp.; LS Power Equity Partners II, L.P.
20131299	G	Koch Industries, Inc.; Molex Incorporated; Koch Industries, Inc.
20131306	G	The Resolute Fund II, L.P.; Harbour Group Investments V, L.P.; The Resolute Fund II, L.P.
20131307	G	Anthony C. and Alice C. Cibilich; The Resolute Fund II Maritime Partnership, L.P.; Anthony C. and Alice C. Cibilich.
20131308	G	Twitter, Inc.; MoPub Inc.; Twitter, Inc.
20131309	G	Aurora Resurgence Fund II L.P.; Aurora Resurgence Fund (C) L.P.; Aurora Resurgence Fund II L.P.
20131318	G	Clayton, Dubilier & Rice Fund IX, L.P.; FR XI Offshore AIV, L.P.; Clayton, Dubilier & Rice Fund IX, L.P.
09/30/2013		
20131174	G	Centrica plc; Hess Corporation; Centrica plc.
20131264	G	University of Maryland Medical System, Corp.; Upper Chesapeake Health System, Inc.; University of Maryland Medical System, Corp.
20131268	G	Third Point Ultra, Ltd.; Sotheby's; Third Point Ultra, Ltd.
20131269	G	Third Point Offshore Fund, Ltd.; Sotheby's; Third Point Offshore Fund, Ltd.
20131301	G	The Resolute Fund II Maritime Partnership, L.P.; Abdon Callais Offshore, LLC; The Resolute Fund II Maritime Partnership, L.P.
20131303	G	EnerSys; Purcell Systems, Inc.; EnerSys.
20131343	G	Packaging Corporation of America; Boise Inc.; Packaging Corporation of America.

FOR FURTHER INFORMATION CONTACT: Renee Chapman, Contact Representative, or Theresa Kingsberry Legal, Assistant. Federal Trade Commission Premerger, Notification Office Bureau of Competition, Room H–303, Washington, DC 20580, (202) 326–3100.

By direction of the Commission.

Donald S. Clark,

Secretary.

[FR Doc. 2013–25710 Filed 10–30–13; 8:45 am]

BILLING CODE 6750–01–P

DEPARTMENT OF HEALTH AND HUMAN SERVICES

National Committee on Vital and Health Statistics: Meeting Standards Subcommittee

Pursuant to the Federal Advisory Committee Act, the Department of Health and Human Services (HHS) announces the following advisory committee meeting.

Name: National Committee on Vital and Health Statistics (NCVHS) Subcommittee on Standards.

Time and Date: November 12, 2013 8:30 a.m.–5:30 p.m. EST.

Place: Centers for Disease Control and Prevention, National Center for Health Statistics, 3311 Toledo Road, Auditorium B & C, Hyattsville, Maryland 20782, (301) 458–4524.

Status: Open.

Purpose: The purpose of this hearing is to gather industry input on the state of health data standards used by public health and population health programs, and the scope of the meeting will include standards used for electronic exchange of information between public health and external stakeholders. This includes standards for data coding, document-type standards, message content, structure and format standards, transport, vocabulary and terminology, and data management standards across various public health functions and activities including but not limited to vital statistics, bio-surveillance, syndromic surveillance, screening, immunizations, public health laboratory, environmental health, and public health/population health analytics. Coding and classification systems for certain core public health data elements will be included.

The meeting will include an overview of where and how health data standards are used across public health functions, and the current status of public health data standards. The hearing will provide an opportunity for the Standards Subcommittee to hear from individuals representing public health data standards organizations, public health agencies, standards developers, and software/application vendors. Important work has been done in standard development organizations to advance the development of public health standards, and these developments will be highlighted in the discussion.

In addition, the Subcommittees on Population Health and Privacy, Confidentiality and Security will explore the need for convening a future hearing to focus on important considerations for standardized definitions of public health variables, privacy and security, population health management, and community health data, building on recent work by the Committee on health information standardization and community health data initiatives.

Contact Person for More Information: Marjorie S. Greenberg, Executive Secretary, NCVHS, National Center for Health Statistics, Centers for Disease Control and Prevention, 3311 Toledo Road, Room 2402, Hyattsville, Maryland 20782, telephone (301) 458–4245 or Kamahanahokulani Farrar, Centers for Medicare and Medicaid Services, Office of E-Health Standards and Services, 7500 Security Boulevard, Baltimore, Maryland 21244, telephone (410) 786–6711. Program information as well as summaries of meetings and a roster of committee members are available on the NCVHS home page of the HHS Web site: *http://www.ncvhs.hhs.gov/,* where further information including an agenda will be posted when available.

Should you require reasonable accommodation, please contact the CDC Office of Equal Employment Opportunity on (301) 458–4EEO (4336) as soon as possible.

Dated: October 22, 2013.

James Scanlon,

Deputy Assistant Secretary for Planning and Evaluation (Science and Data Policy), Office of the Assistant Secretary for Planning and Evaluation.

[FR Doc. 2013–25835 Filed 10–30–13; 8:45 am]

BILLING CODE 4151–05–P

DEPARTMENT OF HEALTH AND HUMAN SERVICES

National Committee on Vital and Health Statistics: Meeting Full Committee

Pursuant to the Federal Advisory Committee Act, the Department of Health and Human Services (HHS) announces the following advisory committee meeting.

Name: National Committee on Vital and Health Statistics (NCVHS), Full Committee Meeting.

Time and Date:
November 13, 2013 9:00 a.m.–2:15 p.m. EST.
November 14, 2013 9:30 a.m.–12:00 p.m. EST.

Place: Centers for Disease Control and Prevention, National Center for Health Statistics, 3311 Toledo Road, Auditorium B & C, Hyattsville, Maryland 20782, (301) 458–4524.

Status: Open.

Purpose: The purpose of this meeting is to review the status of NCVHS activities, strategically plan for 2014 objectives and deliverables, and examine the Committee efforts in light of its Guiding Principles and Convergence Framework. The Working Group on HHS Data Access and Use will continue strategic discussions on community health data issues.

The times shown above are for the Full Committee meeting. Subcommittee breakout sessions are scheduled for late in the afternoon on the first day and early morning the second day. Agendas for these breakout sessions will be posted on the NCVHS Web site (URL below).

Contact Person for More Information: Substantive program information may be obtained from Marjorie S. Greenberg, Executive Secretary, NCVHS, National Center for Health Statistics, Centers for Disease Control and Prevention, 3311 Toledo Road, Room 2402, Hyattsville, Maryland 20782, telephone (301) 458–4245. Summaries of meetings and a roster of committee members are available on the NCVHS home page of the HHS Web site: *http://www.ncvhs.hhs.gov/,* where further information including an agenda will be posted when available.

Should you require reasonable accommodation, please contact the CDC Office of Equal Employment Opportunity on (301) 458–4EEO (4336) as soon as possible.

Dated: October 24, 2013.

James Scanlon,

Deputy Assistant Secretary for Planning and Evaluation (Science and Data Policy), Office of the Assistant Secretary for Planning and Evaluation.

[FR Doc. 2013–25834 Filed 10–30–13; 8:45 am]

BILLING CODE 4151–05–P

DEPARTMENT OF HEALTH AND HUMAN SERVICES

Agency for Healthcare Research and Quality

Agency Information Collection Activities: Proposed Collection; Comment Request

AGENCY: Agency for Healthcare Research and Quality, HHS.

ACTION: Notice.

SUMMARY: This notice announces the intention of the Agency for Healthcare Research and Quality (AHRQ) to request that the Office of Management and Budget (OMB) approve the proposed information collection project: ''Evaluation of the Children's Health Insurance Program Reauthorization Act of 2009 (CHIPRA) Quality Demonstration Grant Program: Qualitative Data Collection.'' In accordance with the Paperwork Reduction Act, 44 U.S.C. 3501–3521, AHRQ invites the public to comment on this proposed information collection.

This proposed information collection was previously published in the **Federal Register** on July 31st, 2013 and allowed 60 days for public comment. No comments were received. The purpose of this notice is to allow an additional 30 days for public comment.

DATES: Comments on this notice must be received by December 2, 2013.

ADDRESSES: Written comments should be submitted to: AHRQ's OMB Desk Officer by fax at (202) 395–6974 (attention: AHRQ's desk officer) or by email at *OIRA_submission@omb.eop.gov* (attention: AHRQ's desk officer).

Copies of the proposed collection plans, data collection instruments, and specific details on the estimated burden can be obtained from the AHRQ Reports Clearance Officer.

FOR FURTHER INFORMATION CONTACT: Doris Lefkowitz, AHRQ Reports Clearance Officer, (301) 427–1477, or by email at *doris.lefkowitz@AHRQ.hhs.gov.*

SUPPLEMENTARY INFORMATION:

Proposed Project

Evaluation of the Children's Health Insurance Program Reauthorization Act of 2009 (CHIPRA) Quality Demonstration Grant Program: Qualitative Data Collection

Section 401(a) of the Children's Health Insurance Program Reauthorization Act of 2009 (CHIPRA), Public Law 111–3, amended the Social Security Act (the Act) to enact section 1139A (42 U.S.C. 1320b–9a). AHRQ is requesting approval from the Office of Management and Budget (OMB) for the collection of qualitative data through site visit interviews and focus groups to support a comprehensive, mixed-methods evaluation of the quality demonstration grants authorized under section 1139A(d) of the Act. AHRQ's mission of improving the quality and effectiveness of health care in the United States aligns with evaluating whether, and through what mechanism, projects funded by the CHIPRA demonstration grants improve the quality of care received by children in Medicaid and the Children's Health Insurance Program (CHIP).

CHIPRA included funding for five-year grants so that States can experiment with and evaluate several promising ideas related to improving

the quality of children's health care in Medicaid and CHIP. In February 2010, the Centers for Medicare & Medicaid Services (CMS) announced the award of 10 demonstration grants to States that convincingly articulated an achievable vision of what they could accomplish by the end of the five-year grant period, described strategies they would use to achieve the objectives, and explained how the strategies would achieve the objectives. Applicants were encouraged by CMS to address multiple grant categories (described below) and to partner with other States in designing and implementing their projects.

Of the 10 grantee States selected, six are partnering with other States, for a total of 18 demonstration States. The demonstration States are: Colorado (partnering with New Mexico); Florida (with Illinois); Maine (with Vermont); Maryland (with Wyoming and Georgia); Massachusetts; North Carolina; Oregon (with Alaska and West Virginia); Pennsylvania; South Carolina; and Utah (with Idaho). These demonstration States have implemented 51 distinct projects in at least one of five possible grant categories, A to E. Category A grantees are experimenting with and/or evaluating the use of pediatric quality measures, including those in the initial core set of children's health care quality measures (a group of measures developed for state Medicaid and CHIP agencies to report in a standardized fashion to CMS). Category B grantees are promoting health information technologies for improved care delivery and patient outcomes. Category C grantees are implementing the patient-centered medical home (PCMH) model of primary care, working with school-based health centers (SBHCs) to improve care, or using other provider-based service delivery models aimed at improving care quality. Category D grantees will evaluate the impact of a model pediatric electronic health record. Category E grantees are testing other State-designed approaches to quality improvement in Medicaid and CHIP. This phase of the project will use qualitative techniques such as in-depth interviews and focus groups.

The first round of interviews for the project was completed in an earlier phase of the project in August of 2012 under an information collection request approved by OMB on February 17th, 2012 (OMB Control No. 0935–0190). While the first round of interviews focused on demonstration goals and early strategies, the second round of interviews described in this information collection request will focus on demonstration outcomes and lessons learned. These interviews are designed to build on the information gathered in the first round to develop a complete picture of demonstration implementation.

AHRQ's goal in performing this evaluation of the CHIPRA Quality Demonstration Grant Program is to produce insights into how best to implement quality improvement programs as well as information on how successful programs can be replicated to improve children's health care quality in Medicaid and CHIP. The specific goals of this project are as follows:

1. Develop a deep, systematic understanding of how CHIPRA demonstration States carried out their grant-funded projects.

2. Understand why the CHIPRA demonstration States pursued certain strategies.

3. Understand whether and how the CHIPRA demonstration States' efforts affected outcomes related to knowledge and behavior change in targeted providers and/or consumers of health care.

4. Identify CHIPRA State activities that measurably improve the nation's health care, especially as it pertains to children.

This study is being conducted by AHRQ through its contractor, Mathematica Policy Research Inc., and their subcontractors, the Urban Institute and AcademyHealth, pursuant to AHRQ's statutory authority to conduct and support research on health care and on systems for the delivery of such care, including activities with respect to the quality, effectiveness, efficiency, appropriateness and value of healthcare services and with respect to quality measurement and improvement. 42 U.S.C. 299a(a)(1) and (2).

Method of Collection

To meet the project goals AHRQ will implement the following data collections:

1. Key Staff Interviews—Key staff members are staff directly involved in the design and oversight of grant-funded activities. The purpose of these interviews is to gain insight into the implementation of demonstration projects, to understand contextual factors, and to identify lessons and implications for the broad application and sustainability of projects. Semi-structured interviews will be conducted with up to 4 key staff members per state.

2. Implementation Staff Interviews—Other implementation staff are staff involved in the day-to-day implementation of grant-funded projects. These staff members include state agency employees, provider trainers or coaches, health IT vendors, and/or project consultants. The purpose of these interviews is to gain insight into the opportunities and challenges related to key technical aspects of project implementation. Semi-structured interviews will be conducted with up to 16 other implementation staff members per state.

3. Stakeholder Interviews—External stakeholders have a direct interest in children's care quality in Medicaid and CHIP. Stakeholders include representatives of managed care organizations, state chapters of the American Academy of Pediatrics, advocacy organizations for children and families, and social service agencies. These stakeholders will be familiar with the CHIPRA projects and may serve on advisory panels or workgroups related to one or more projects. The interviews will gather insight into the opportunities and challenges related to project implementation, stakeholder satisfaction with their project involvement, and contextual factors. Semi-structured interviews will be conducted with up to 8 external stakeholders per state.

4. Health Care Organization Staff Interviews—Depending on the projects a state is implementing, health care organizations participating in demonstration activities can include private practices, public clinics, federally qualified health centers, care management entities, or school based health centers. Interviews will capture information about project-related activities, staff perceptions of outcomes and impacts, and the organizations involvement in other quality-improvement initiatives. Semi-structured interviews will be conducted with up to 12 staff members per state.

5. Parent Focus Groups—We will hold in-person focus groups with parents, guardians, or other caregivers of children who are enrolled in Medicaid or CHIP and are served by the medical practices involved in the CHIPRA demonstration. There will be four focus groups in four of the twelve states implementing patient-centered medical home demonstration projects. The number of participants per focus group will range from 8 to 10, resulting in a maximum of 160 adults participating. They will be conducted in English, and also in Spanish in states with high proportions of Hispanic individuals covered by Medicaid.

6. Adolescent Focus Groups—We will hold in-person focus groups with adolescents who are enrolled in Medicaid or CHIP and are served by school-based health centers involved in the CHIPRA demonstration. There will be four focus groups in one of the two

states implementing school-based health center projects. The number of participants per focus group will range from 8 to 10, resulting in a maximum of 40 adolescents participating.

This evaluation is designed to develop a rich understanding of States' implementation activities (goal 1), document the rationale for the selection of particular strategies (goal 2), document provider and parent reported behavior change (goal 3), and assess the perceived impact of those changes on access, quality, and cost of care (goal 4).

Estimated Annual Respondent Burden

Exhibit 1 shows the estimated annualized burden hours for the respondents' time to participate in this evaluation. Key staff interviews will be conducted with up to four persons from each of the 18 CHIPRA demonstration States (72 total) and will last for about 1½ hours. Implementation staff interviews will include up to 16 persons from each of the 18 CHIPRA demonstration States (288 total) and take an hour to complete. Stakeholder interviews will include up to 8 persons from each of the 18 CHIPRA demonstration States (144 total) and also take an hour to complete. Health care provider interviews will be conducted with up to 12 persons from each of the 18 CHIPRA demonstration States and will last 45 minutes (216 total). About 229 parents will be screened to get a maximum of 160 parents to participate in 16 focus groups across 4 States implementing PCMH-focused demonstration projects. The screener takes 25 minutes to complete and the focus group will last one and a half hours; the burden estimate of 2.5 hours includes one hour for travel time to and from the focus group site.

About 57 adolescents will be screened to get up to 40 adolescents to participate in four focus groups completed in one State with SBHC demonstration projects. The screener takes 25 minutes to complete and the focus group will last one and a half hours (travel time does not apply because the focus groups will be held on school premises). The total burden for the qualitative evaluation is estimated to be 1,281 hours.

EXHIBIT 1—ESTIMATED ANNUALIZED BURDEN HOURS

Form name	Number of respondents *	Number of responses per respondent	Hours per response	Total burden hours
Key Staff Interviews	72	1	1.5	108
Implementation Staff Interviews	288	1	1	288
Stakeholder Interviews	144	1	1	144
Health Care Provider Interviews	216	1	45/60	162
Parent Focus Group Screener	** 229	1	25/60	95
Parent Focus Groups	160	1	2.5	400
Adolescent Focus Group Screener	** 57	1	25/60	24
Adolescent Focus Groups	40	1	1.5	60
Total	1,206	na	na	1,281

* The number of respondents that will be interviewed in each state will vary depending on the number, scope, complexity, and nature of the projects implemented. This table reflects upper bound estimates of total burden hours and the number of respondents per type per state.
** Based on an expected 70% screen-in rate.

Exhibit 2 shows the estimated annualized cost burden associated with the respondent's time to participate in this evaluation. The total cost burden for the interviews and focus groups is estimated to be $43,303.

EXHIBIT 2—ESTIMATED ANNUALIZED COST BURDEN

Form name	Number of respondents	Total burden hours	Average hourly wage rate *	Total cost burden
Key Staff Interviews	72	108	[a] $55.22	$5,964
Implementation Staff Interviews	288	288	[b] 30.99	8,925
Stakeholder Interviews	144	144	[b] 30.99	4,463
Health Care Provider Interviews	216	162	[c] 80.59	13,056
Parent Focus Group Screener	229	95	[d] 22.01	2,091
Parent Focus Groups	160	400	[d] 22.01	8,804
Adolescent Focus Group Screener	57	24	[e] 0	0.00
Adolescent Focus Groups	40	60	[e] 0	0.00
Total	1,206	1,281	na	43,303

* National Compensation Survey: Occupational wages in the United States May 2012, "U.S. Department of Labor, Bureau of Labor Statistics."
[a] Based on the mean wages for general and operations manager (11–1021).
[b] Based on the mean wages for social and community service managers (11–9151).
[c] Based on the mean wages for general pediatricians (29–1065).
[d] Based on the mean wages for all occupations.
[e] Wage rates for adolescents are assumed to be zero.

Request for Comments

In accordance with the Paperwork Reduction Act, comments on AHRQ's information collection are requested with regard to any of the following: (a) Whether the proposed collection of information is necessary for the proper performance of AHRQ health care research and health care information dissemination functions, including whether the information will have practical utility; (b) the accuracy of

AHRQ's estimate of burden (including hours and costs) of the proposed collection(s) of information; (c) ways to enhance the quality, utility, and clarity of the information to be collected; and (d) ways to minimize the burden of the collection of information upon the respondents, including the use of automated collection techniques or other forms of information technology.

Comments submitted in response to this notice will be summarized and included in the Agency's subsequent request for OMB approval of the proposed information collection. All comments will become a matter of public record.

Dated: October 1, 2013.

Richard Kronick,

Director.

[FR Doc. 2013–25839 Filed 10–30–13; 8:45 am]

BILLING CODE 4160–90–M

DEPARTMENT OF HEALTH AND HUMAN SERVICES

Agency for Healthcare Research and Quality

Meeting of the National Advisory Council for Healthcare Research and Quality

AGENCY: Agency for Healthcare Research and Quality (AHRQ), HHS.

ACTION: Notice of public meeting.

SUMMARY: In accordance with section 10(a) of the Federal Advisory Committee Act, 5 U.S.C. App. 2, this notice announces a meeting of the National Advisory Council for Healthcare Research and Quality.

DATES: The meeting will be held on Friday, November 15, 2013, from 8:30 a.m. to 3:30 p.m.

ADDRESSES: The meeting will be held at the Eisenberg Conference Center, Agency for Healthcare Research and Quality, 540 Gaither Road, Rockville, Maryland 20850.

FOR FURTHER INFORMATION CONTACT: Jaime Zimmerman, Designated Management Official, at the Agency for Healthcare Research and Quality, 540 Gaither Road, Rockville, Maryland 20850, (301) 427–1456. For press-related information, please contact Alison Hunt at (301) 427–1244.

If sign language interpretation or other reasonable accommodation for a disability is needed, please contact the Food and Drug Administration (FDA) Office of Equal Employment Opportunity and Diversity Management on (301) 827–4840, no later than Friday, November 1, 2013. The agenda, roster, and minutes are available from Ms. Bonnie Campbell, Committee Management Officer, Agency for Healthcare Research and Quality, 540 Gaither Road, Rockville, Maryland 20850. Ms. Campbell's phone number is (301) 427–1554.

SUPPLEMENTARY INFORMATION:

I. Purpose

The National Advisory Council for Healthcare Research and Quality is authorized by Section 941 of the Public Health Service Act, 42 U.S.C. 299c. In accordance with its statutory mandate, the Council is to advise the Secretary of the Department of Health and Human Services and the Director, Agency for Healthcare Research and Quality (AHRQ), on matters related to AHRQ's conduct of its mission including providing guidance on (A) Priorities for health care research, (B) the field of health care research including training needs and information dissemination on health care quality and (C) the role of the Agency in light of private sector activity and opportunities for public private partnerships.

The Council is composed of members of the public, appointed by the Secretary, and Federal ex-officio members specified in the authorizing legislation.

II. Agenda

On Friday, November 15, 2013, there will be a subcommittee meeting for the National Healthcare Quality and Disparities Report scheduled to begin at 7:30 a.m. The subcommittee meeting is open the public. The Council meeting will convene at 8:30 a.m., with the call to order by the Council Chair and approval of previous Council summary notes. The meeting is open to the public. The meeting will begin with the AHRQ Director presenting an update on current research, programs, and initiatives. Following the Director's Update, the agenda includes updates on Affordable Care Act implementation, Patient Centered Outcomes Research Institute and the subcommittee on Strategic Direction. The final agenda will be available on the AHRQ Web site a *www.AHRQ.gov* no later than Friday, November 8, 2013.

Richard Kronick,

AHRQ Director.

[FR Doc. 2013–25832 Filed 10–30–13; 8:45 am]

BILLING CODE 4160–90–P

DEPARTMENT OF HEALTH AND HUMAN SERVICES

Agency for Healthcare Research and Quality

Notice of Meetings

AGENCY: Agency for Healthcare Research and Quality (AHRQ), HHS.

ACTION: Notice of Five AHRQ Subcommittee Meetings.

SUMMARY: The subcommittees listed below are part of AHRQ's Health Services Research Initial Review Group Committee. Grant applications are to be reviewed and discussed at these meetings. Each subcommittee meeting will commence in open session before closing to the public for the duration of the meeting. These meetings will be closed to the public in accordance with 5 U.S.C. App. 2 section 10(d), 5 U.S.C. section 552b(c)(4), and 5 U.S.C. 552b(c)(6).

Note: Due to the Federal government shutdown, AHRQ is republishing its Study Section meetings with new dates. Please see below.

DATES: See below for dates of meetings:

1. *Healthcare Safety and Quality Improvement Research (HSQR)*
   Date: October 23–24, 2013 (Open from 8:00 a.m. to 8:30 a.m. on October 23 and closed for remainder of the meeting)
2. *Healthcare Effectiveness and Outcomes Research (HEOR)*
   Date: October 28, 2013 (Open from 8:30 a.m. to 9:00 a.m. on October 28 and closed for remainder of the meeting)
3. *Health Care Research and Training (HCRT)* (Telephone Conference Call)
   Date: October 30, 2013 (Open from 8:00 a.m. to 8:30 a.m. on October 30 and closed for remainder of the meeting)
4. *Health System and Value Research (HSVR)*
   Date: October 31, 2013 (Open from 8:00 a.m. to 8:30 a.m. on October 31 and closed for remainder of the meeting)
5. *Healthcare Information Technology Research (HITR)*
   Date: October 31–November 1, 2013 (Open from 8:00 a.m. to 8:30 a.m. on October 31 and closed for remainder of the meeting)

ADDRESSES: Meetings of Healthcare Safety and Quality Improvement Research (HSQR), Healthcare Effectiveness and Outcomes Research (HEQR), Health System and Value Research (HSVR), and Health System

and Value Research (HSVR) will take place at: Hyatt Regency Hotel Bethesda, One Metro Center, Bethesda, MD 20814.

Conference Call of Health Care Research and Training (HCRT) meeting will take place at: AHRQ, (Conference Room TBD), 540 Gaither Road, Rockville, MD 20850.

FOR FURTHER INFORMATION CONTACT: (to obtain a roster of members, agenda or minutes of the non-confidential portions of the meetings.)

Mrs. Bonnie Campbell, Committee Management Officer, Office of Extramural Research Education and Priority Populations, AHRQ, 540 Gaither Road, Suite 2000, Rockville, Maryland 20850, Telephone (301) 427–1554.

SUPPLEMENTARY INFORMATION: In accordance with section 10(a)(2) of the Federal Advisory Committee Act (5 U.S.C. App. 2), AHRQ announces meetings of the scientific peer review groups listed above, which are subcommittees of AHRQ's Health Services Research Initial Review Group Committee. Each subcommittee meeting will commence in open session before closing to the public for the duration of the meeting. The subcommittee meetings will be closed to the public in accordance with the provisions set forth in 5 U.S.C. App. 2 section 10(d), 5 U.S.C. 552b(c)(4), and 5 U.S.C. 552b(c)(6) The grant applications and the discussions could disclose confidential trade secrets or commercial property such as patentable material, and personal information concerning individuals associated with the grant applications, the disclosure of which would constitute a clearly unwarranted invasion of personal privacy.

Agenda items for these meetings are subject to change as priorities dictate.

Dated: October 24, 3013.

Richard Kronick,

AHRQ Director.

[FR Doc. 2013–25833 Filed 10–30–13; 8:45 am]

BILLING CODE 4160–90–P

DEPARTMENT OF HEALTH AND HUMAN SERVICES

Centers for Disease Control and Prevention

[60Day–14–0892]

Proposed Data Collections Submitted for Public Comment and Recommendations

In compliance with the requirement of Section 3506(c)(2)(A) of the Paperwork Reduction Act of 1995 for opportunity for public comment on proposed data collection projects, the Centers for Disease Control and Prevention (CDC) will publish periodic summaries of proposed projects. To request more information on the proposed projects or to obtain a copy of the data collection plans and instruments, call 404–639–7570 or send comments to LeRoy Richardson, 1600 Clifton Road, MS–D74, Atlanta, GA 30333 or send an email to *omb@cdc.gov.*

Comments are invited on: (a) Whether the proposed collection of information is necessary for the proper performance of the functions of the agency, including whether the information shall have practical utility; (b) the accuracy of the agency's estimate of the burden of the proposed collection of information; (c) ways to enhance the quality, utility, and clarity of the information to be collected; and (d) ways to minimize the burden of the collection of information on respondents, including through the use of automated collection techniques or other forms of information technology. Written comments should be received within 60 days of this notice.

Proposed Project

Clostridium difficile Infection (CDI) Surveillance (0920–0892, Expiration 07/31/2014)—Extension—National Center for Emerging and Zoonotic Infectious Diseases (NCEZID), Centers for Disease Control and Prevention (CDC).

Background and Brief Description

Steady increases in the rate and severity of *Clostridium difficile* infection (CDI) indicate a clear need to conduct longitudinal assessments to continue to monitor changes in CDI epidemiology, including changes in risk factors for disease, as well as increases The surveillance population will consist of persons residing in the catchment area of the participating Emerging Infections Program (EIP) sites who are 1 year of age or older. This surveillance poses no more than minimal risk to the study participants as there will be no interventions or modifications to the care study participants receive. EIP surveillance personnel will perform active case finding from laboratory reports of stool specimens testing positive for *C. difficile* toxin and abstract data on cases using a standardized case report form. For a subset of cases (e.g., community-associated *C. difficile* cases) sites will administer a health interview.

CDC requests Office of Management and Budget (OMB) extension of standardized data collection for an additional three years. The epidemiology of *C. difficile* continues to evolve and incidence of disease is still high with no significant declines being observed. Continuing to understand what put persons at risk for *C. difficile* in the community is critical to inform prevention strategies. There are no changes in the burden estimates or data collection instruments from what is shown in the current inventory.

A total of 600 individuals who develop CDI will be contacted for a telephone interview annually and of those it is estimated that 500 will meet study inclusion criteria. The interview screening is estimated to take 5 minutes and the full telephone interview is estimated to take 40 minutes. Therefore, the total estimated annualized burden for this data collection is estimated to be 383 hours.

There are no costs to the respondents other than their time.

ESTIMATED ANNUALIZED BURDEN HOURS

Type of respondents	Form name	Number of respondents	Number of responses per respondent	Avg. burden per response (in hrs.)	Total burden (in hrs.)
Persons in the community infected with *C. difficile*.	Screening Form	600	1	5/60	50
	Telephone Interview	500	1	40/60	333
Total					383

Leroy A. Richardson,

Chief, Information Collection Review Office, Office of Scientific Integrity, Office of the Associate Director for Science, Office of the Director, Centers for Disease Control and Prevention.

[FR Doc. 2013–25862 Filed 10–30–13; 8:45 am]

BILLING CODE 4163–18–P

DEPARTMENT OF HEALTH AND HUMAN SERVICES

Centers for Disease Control and Prevention

[60Day–14–0338)

Agency Forms Undergoing Paperwork Reduction Act Review

In compliance with the requirement of Section 3506(c)(2)(A) of the Paperwork Reduction Act of 1995 for opportunity for public comment on proposed data collection projects, the Centers for Disease Control and Prevention (CDC) will publish periodic summaries of proposed projects. To request more information on the proposed projects or to obtain a copy of the data collection plans and instruments, call 404–639–7570 or send comments to CDC, LeRoy Richardson, 1600 Clifton Road, MS D–74, Atlanta, GA 30333 or send an email to *omb@cdc.gov.*

Comments are invited on: (a) Whether the proposed collection of information is necessary for the proper performance of the functions of the agency, including whether the information shall have practical utility; (b) the accuracy of the agency's estimate of the burden of the proposed collection of information; (c) ways to enhance the quality, utility, and clarity of the information to be collected; and (d) ways to minimize the burden of the collection of information on respondents, including through the use of automated collection techniques or other forms of information technology. Written comments should be received within 60 days of this notice.

Proposed Project

Annual Submission of the Ingredients Added to, and the Quantity of Nicotine Contained in, Smokeless Tobacco Manufactured, Imported, or Packaged in the U.S. (OMB No. 0920–0338, exp. 02/28/2014)—Extension—Office on Smoking and Health, National Center for Chronic Disease Prevention and Health Promotion (NCCDPHP), Centers for Disease Control and Prevention (CDC).

Background and Brief Description

The oral use of smokeless tobacco (SLT) products represents a significant health risk. Smokeless tobacco products contain carcinogens which can cause cancer and a number of non-cancerous oral conditions, as well as leading to nicotine addiction and dependence. Furthermore, SLT use is not a safe substitute for cigarette smoking. Adolescents who use smokeless tobacco are more likely to become cigarette smokers.

The Centers for Disease Control and Prevention (CDC), Office on Smoking and Health (OSH), has primary responsibility for the Department of Health and Human Services (HHS) smoking and health program. HHS's overall goal is to reduce death and disability resulting from the use of smokeless tobacco products and other forms of tobacco through programs of information, education and research.

The Comprehensive Smokeless Tobacco Health Education Act of 1986 (CSTHEA, 15 U.S.C. 4401 et seq., Pub. L. 99–252) requires each person who manufactures, packages, or imports smokeless tobacco products to provide the Secretary of HHS with a list of ingredients added to tobacco in the manufacture of smokeless tobacco products. CSTHEA further requires submission of the quantity of nicotine contained in each smokeless tobacco product. Finally, the legislation authorizes HHS to undertake research, and to report to Congress (as deemed appropriate) discussing the health effects of these ingredients.

HHS has delegated responsibility for implementing the required information collection to CDC's Office on Smoking and Health. Respondents are not required to submit specific forms; however, they are required to meet reporting guidelines and to submit the ingredient report by chemical name and Chemical Abstract Service (CAS) Registration Number, consistent with accepted reporting practices for other companies that are required to report ingredients added to other consumer products. Typically, respondents submit a summary report to CDC with the ingredient information for multiple products, or a statement that there are no changes to their previously submitted ingredient report. Respondents may submit the required information to CDC through a designated representative. The information collection is subject to strict confidentiality provisions.

Ingredient reports for new SLT products are due at the time of first importation. Thereafter, ingredient reports are due annually on March 31. Information is submitted to OSH by mailing a written report on the respondent's letterhead, which may be accompanied by a Compact Disc (CD), three-inch floppy disk, or thumb drive. Electronic mail submissions are not accepted. Annual submission reports are mailed to: Office on Smoking and Health, Attention: FCLAA Program Manager, National Center for Chronic Disease Prevention and Health Promotion, Centers for Disease Control and Prevention, 4770 Buford Highway NE., MS F–79, Atlanta, GA 30341–3717. Upon receipt and verification of the annual nicotine and ingredient report, OSH issues a Certificate of Compliance to the respondent.

There are no costs to respondents other than their time. Office of Management and Budget (OMB) approval is requested for three years.

ESTIMATED ANNUALIZED BURDEN HOURS

Type of respondents	Form name	Number of respondents	Number of responses per respondent	Average burden per response (in hours)	Total burden (in hours)
Smokeless Tobacco Manufacturers, Packagers, and Importers.	SLT Nicotine and Ingredient Report	13	1	1,713	22,269

Leroy A. Richardson,

Chief, Information Collection Review Office, Office of Scientific Integrity, Office of the Associate Director for Science, Office of the Director, Centers for Disease Control and Prevention.

[FR Doc. 2013–25860 Filed 10–30–13; 8:45 am]

BILLING CODE 4163–18–P

DEPARTMENT OF HEALTH AND HUMAN SERVICES

Centers for Disease Control and Prevention

[60Day–14–0210]

Proposed Data Collections Submitted for Public Comment and Recommendations

In compliance with the requirement of Section 3506(c)(2)(A) of the Paperwork Reduction Act of 1995 for opportunity for public comment on proposed data collection projects, the Centers for Disease Control and Prevention (CDC) will publish periodic summaries of proposed projects. To request more information on the proposed projects or to obtain a copy of the data collection plans and instruments, call 404–639–7570 or send comments to CDC, LeRoy Richardson, 1600 Clifton Road, MS D–74, Atlanta, GA 30333 or send an email to *omb@cdc.gov.*

Comments are invited on: (a) Whether the proposed collection of information is necessary for the proper performance of the functions of the agency, including whether the information shall have practical utility; (b) the accuracy of the agency's estimate of the burden of the proposed collection of information; (c) ways to enhance the quality, utility, and clarity of the information to be collected; and (d) ways to minimize the burden of the collection of information on respondents, including through the use of automated collection techniques or other forms of information technology. Written comments should be received within 60 days of this notice.

Proposed Project

List of Ingredients Added to Tobacco in the Manufacture of Cigarette Products (OMB No. 0920–0210, exp. 2/28/2014)—Extension—Office on Smoking and Health, National Center for Chronic Disease Prevention and Health Promotion (NCCDPHP), Centers for Disease Control and Prevention (CDC).

Background and Brief Description

Cigarette smoking is the leading preventable cause of premature death and disability in the United States. Each year, more than 443,000 premature deaths occur as the result of diseases related to cigarette smoking. The Centers for Disease Control and Prevention (CDC), Office on Smoking and Health (OSH) has the primary responsibility for the Department of Health and Human Services (HHS) smoking and health program. HHS's overall goal is to reduce death and disability resulting from cigarette smoking and other forms of tobacco use through programs of information, education and research.

The Comprehensive Smoking Education Act of 1984 (CSEA, 15 U.S.C. 1336 or Pub. L. 98–474) requires each person who manufactures, packages, or imports cigarettes to provide the Secretary of HHS with a list of ingredients added to tobacco in the manufacture of cigarettes. The legislation also authorizes HHS to undertake research, and to report to the Congress (as deemed appropriate) discussing the health effects of these ingredients.

HHS has delegated responsibility for implementing the CSEA's ingredient reporting requirements to CDC's OSH. OSH has collected ingredient reports on cigarette products since 1986. Respondents are commercial cigarette manufacturers, packagers, or importers, or their designated representatives. Respondents are not required to submit specific forms; however, they are required to submit a list of all ingredients used in their products. CDC requires the ingredient report to be submitted by chemical name and Chemical Abstract Service (CAS) Registration Number, consistent with accepted reporting practices for other companies currently required to report ingredients added to other consumer products. Typically, respondents submit a summary report to CDC with the ingredient information for multiple products, or a statement that there are no changes to their previously submitted ingredient report. The estimated burden per response is 6.5 hours. The total estimated annualized burden hours are 501.

Ingredient reports for new products are due at the time of first importation. Thereafter, ingredient reports are due annually on March 31. Information is submitted to OSH by mailing a written report on the respondent's letterhead, which may be accompanied by a compact disk (CD), three-inch floppy disk, or thumb drive. Annual ingredient reports should be mailed to: Office on Smoking and Health, Attention: FCLAA Program Manager, National Center for Chronic Disease Prevention and Health Promotion, Centers for Disease Control and Prevention, 4770 Buford Highway, NE., MS F–79 Atlanta, GA 30341–3717. Electronic mail submissions are not accepted. Upon receipt and verification of the annual ingredient report, OSH issues a Certificate of Compliance to the respondent.

There are no costs to respondents other than their time. Office of Management and Budget (OMB) approval is requested for three years.

ESTIMATED ANNUALIZED BURDEN HOURS

Type of respondents	Number of respondents	Number of responses per respondent	Average burden per response (in hours)	Total burden (in hours)
Cigarette Manufacturers, Packagers, and Importers	77	1	6.5	501

Leroy A. Richardson

Chief, Information Collection Review Office, Office of Scientific Integrity, Office of the Associate Director for Science, Office of the Director, Centers for Disease Control and Prevention.

[FR Doc. 2013–25799 Filed 10–30–13; 8:45 am]

BILLING CODE 4163–18–P

DEPARTMENT OF HEALTH AND HUMAN SERVICES

Centers for Disease Control and Prevention

[60Day-14–0879]

Proposed Data Collections Submitted for Public Comment and Recommendations

In compliance with the requirement of Section 3506(c)(2)(A) of the Paperwork Reduction Act of 1995 for opportunity for public comment on proposed data collection projects, the Centers for Disease Control and Prevention (CDC) will publish periodic summaries of proposed projects. To request more information on the proposed projects or to obtain a copy of the data collection plans and instruments, call 404–639–7570 or send comments to LeRoy Richardson, 1600 Clifton Road, MS–D74, Atlanta, GA 30333 or send an email to *omb@cdc.gov.*

Comments are invited on: (a) Whether the proposed collection of information is necessary for the proper performance of the functions of the agency, including whether the information shall have practical utility; (b) the accuracy of the agency's estimate of the burden of the proposed collection of information; (c) ways to enhance the quality, utility, and clarity of the information to be collected; and (d) ways to minimize the burden of the collection of information on respondents, including through the use of automated collection techniques or other forms of information technology. Written comments should be received within 60 days of this notice.

Proposed Project

Surveys of State, Tribal, Local, and Territorial (STLT) Governmental Agencies (OMB Control No. 0920–0879, Exp. 3/31/2013)—Revision—Office of the Director, Office for State, Tribal Local and Territorial Support (OSTLTS), Centers for Disease Control and Prevention (CDC).

Background and Brief Description

CDC's mission is to create the expertise, information, and tools that people and communities need to protect their health—through health promotion, prevention of disease, injury and disability, and preparedness for new health threats. CDC seeks to accomplish its mission by collaborating with partners throughout the nation and the world to: Monitor health, detect and investigate health problems, conduct research to enhance prevention, develop and advocate sound public health policies, implement prevention strategies, promote healthy behaviors, foster safe and healthful environments, and provide leadership and training.

CDC is requesting a three-year approval for a generic clearance to collect information related to domestic public health issues and services that affect and/or involve state, tribal, local and territorial (STLT) government entities. The respondent universe is comprised of STLT governmental staff or delegates acting on behalf of a STLT agency involved in the provision of essential public health services in the United States. Delegate is defined as a governmental or non-governmental agent (agency, function, office or individual) acting for a principal or submitted by another to represent or act on their behalf. The STLT agency is represented by a STLT entity or delegate with a task to protect and/or improve the public's health. Information will be used to assess situational awareness of current public health emergencies; make decisions that affect planning, response and recovery activities of subsequent emergencies; fill CDC gaps in knowledge of programs and/or STLT governments that will strengthen surveillance, epidemiology, and laboratory science; improve CDC's support and technical assistance to states and communities. CDC will conduct brief data collections, across a range of public health topics related to essential public health services.

CDC estimates up to 30 data collections with STLT governmental staff or delegates, and 10 data collections with local/county/city governmental staff or delegates will be conducted on an annual basis. Ninety-five percent of these data collections will be web-based and five percent telephone, in-person, and focus groups. The total annualized burden of 54,000 hours is based on the following estimates.

ESTIMATED ANNUALIZED BURDEN HOURS

Type of respondent	Form name	Number of respondents	Number of surveys per respondent type	Average burden per respondent (in hours)	Total burden hours (annual)
State, Territorial, or Tribal government staff or delegate.	Web, telephone, in-person, focus group.	800	30	1	24,000
Local/County/City government staff or delegate.	Web, telephone, in-person, focus group.	3,000	10	1	30,000
Total					54,000

Leroy A. Richardson,

Chief, Information Collection Review Office, Office of Scientific Integrity, Office of the Associate Director for Science, Office of the Director, Centers for Disease Control and Prevention.

[FR Doc. 2013–25861 Filed 10–30–13; 8:45 am]

BILLING CODE 4163–18–P

DEPARTMENT OF HEALTH AND HUMAN SERVICES

Food and Drug Administration

[Docket No. FDA–2013–N–1151]

Agency Information Collection Activities; Proposed Collection; Comment Request; Experimental Study of Direct-to-Consumer Promotion Directed at Adolescents

AGENCY: Food and Drug Administration, HHS.

ACTION: Notice.

SUMMARY: The Food and Drug Administration (FDA) is announcing an opportunity for public comment on the proposed collection of certain information by the Agency. Under the Paperwork Reduction Act of 1995 (the PRA), Federal Agencies are required to publish notice in the **Federal Register** concerning each proposed collection of information and to allow 60 days for public comment in response to the notice. This notice solicits comments on research entitled, ''Experimental Study of Direct-to-Consumer (DTC) Promotion Directed at Adolescents.'' This study is designed to examine how adolescents interpret DTC advertising directed at them.

DATES: Submit written or electronic comments on the collection of information by December 30, 2013.

ADDRESSES: Submit electronic comments on the collection of information to *http://www.regulations.gov*. Submit written comments on the collection of information to the Division of Dockets Management (HFA–305), Food and Drug Administration, 5630 Fishers Lane, Rm. 1061, Rockville, MD 20852. All comments should be identified with the docket number found in brackets in the heading of this document.

FOR FURTHER INFORMATION CONTACT: FDA PRA Staff, Office of Information Management, Food and Drug Administration, 1350 Piccard Dr., PI50–400B, Rockville, MD 20850, *PRAStaff@fda.hhs.gov.*

SUPPLEMENTARY INFORMATION: Under the PRA (44 U.S.C. 3501–3520), Federal Agencies must obtain approval from the Office of Management and Budget (OMB) for each collection of information they conduct or sponsor. ''Collection of information'' is defined in 44 U.S.C. 3502(3) and 5 CFR 1320.3(c) and includes Agency requests or requirements that members of the public submit reports, keep records, or provide information to a third party. Section 3506(c)(2)(A) of the PRA (44 U.S.C. 3506(c)(2)(A)) requires Federal Agencies to provide a 60-day notice in the **Federal Register** concerning each proposed collection of information before submitting the collection to OMB for approval. To comply with this requirement, FDA is publishing notice of the proposed collection of information set forth in this document.

With respect to the following collection of information, FDA invites comments on these topics: (1) Whether the proposed collection of information is necessary for the proper performance of FDA's functions, including whether the information will have practical utility; (2) the accuracy of FDA's estimate of the burden of the proposed collection of information, including the validity of the methodology and assumptions used; (3) ways to enhance the quality, utility, and clarity of the information to be collected; and (4) ways to minimize the burden of the collection of information on respondents, including through the use of automated collection techniques, when appropriate, and other forms of information technology.

Experimental Study of Direct-to-Consumer (DTC) Promotion Directed at Adolescents—(0910—NEW)

Regulatory Background

Section 1701(a)(4) of the Public Health Service Act (42 U.S.C. 300u(a)(4)) authorizes FDA to conduct research relating to health information. Section 1003(d)(2)(C) of the Federal Food, Drug, and Cosmetic Act (the FD&C Act) (21 U.S.C. 393(d)(2)(C)) authorizes FDA to conduct research relating to drugs and other FDA regulated products in carrying out the provisions of the FD&C Act.

Adolescents and DTC

Sponsors for several prescription drug classes market their products directly to vulnerable groups, including adolescents. Such DTC marketing to adolescents raises a variety of potential concerns. Adolescents are a unique audience for DTC drug marketing because their cognitive abilities are different than those of adults, and they are usually dependent on adults for health insurance coverage, health care provider access, and prescription drug payment. Despite this uniqueness, research regarding how adolescents use risk and benefit information for health-related decisions is limited. If considered at all in healthcare communication research, age is typically treated as simply another segment of the audience (Ref. 1), and researchers fail to consider how *information processing* (how people understand information) in response to ad exposure might differ among adolescents versus older viewers.

The FD&C Act requires manufacturers, packers, and distributors that advertise prescription drugs to disclose certain information about a product's uses and risks to potential consumers in all advertisements. Consumers must consider tradeoffs with regard to the product's risks and benefits in deciding whether to ask their health care professionals about the product. Presenting technically factual information is important, but other factors can also affect potential consumers. Information processing capacity, the relevance and vividness of the information, and contextual factors such as family dynamics likely affect how adolescent consumers weigh the potential risks and benefits of using a product.

Despite the lack of previous research specific to DTC drug marketing to adolescents, existing theoretical and empirical data make a strong case for treating adolescence as a unique life stage during which vulnerabilities that can affect informed decision-making must be taken into account. Well-known theories of adolescent development have long pointed to developmental changes that occur during the transitional period as an individual moves from childhood to young adulthood (Ref. 2). For instance, Erikson (Refs. 3, 4) describes an often turbulent psychosocial crisis that occurs as adolescents strive to develop their unique identify. Piaget (Refs. 5, 6) and Kohlberg (Ref. 7) describe changes in stages relative to cognitive processing and reasoning that occur in this period, as the adolescent becomes increasingly capable of more abstract thinking. Different cognitive, social and emotional, and developmental processes in the adolescent brain mature simultaneously and at different rates, affecting decision-making by age. All of these factors can influence how adolescents perceive and process information as well as weigh risks and benefits.

The need for understanding how adolescents weigh risks and benefits is particularly critical given the potential

adverse events associated with use of the drug classes that are marketed directly to adolescents. Suicide and suicidal ideation has been associated with some of these classes, including a commonly used class of acne medications. The risk and benefit information needs to be clearly presented in ways that adolescents can understand. Interpretation of more subtle messages in the advertisements, along with the lens through which adolescents view the message, must be understood. For example, given the potential stigma of acne and adolescents' heightened concerns about peer perceptions, marketing that emphasizes these two features in subtle ways might minimize the attention given to any risk information provided. This suggests the need to systematically explore the role of various factors that would be expected to influence adolescent decision-making, such as peer and family perceptions of stigma.

Research Purpose

We plan to conduct a randomized, controlled study in two different medical conditions that assesses adolescents' perceptions following exposure to different types of DTC prescription drug advertising. We plan to compare adolescents' perceptions to those of young adult counterparts. Each participant will view a web-based promotional campaign for either a fictitious Attention Deficit Hyperactivity Disorder (ADHD) medication or a fictitious acne medication. Because adolescents typically depend on their parents for prescription drug purchases, we also will include a sample of parents matched to their adolescent children to explore similarities and differences in perceptions for these matched pairs.

Within the two medical conditions, we propose to explore the role of three different factors that may influence adolescent understanding and perceptions of DTC. Two of these factors include timing issues: the timing of the onset of benefits and the timing of the onset of risks. Adolescents may be particularly likely to give more credence to benefits that occur immediately and may be likely to discount risks that do not occur immediately. Research suggests that the frontal lobe, which controls self-regulatory functions, is not fully developed until the mid-20s (Ref. 8), which may lead to difficulty in impulse control and planning, and thus decision-making. Other research suggests that adolescents are more likely to engage in risky behavior, although whether they do this because they discount their own likelihood of experiencing risks or if they cannot help themselves despite having adequate perceptions of their own vulnerability has not been determined (Refs. 9, 10). Given the variety of prescription drug products on the market with varying benefit and risk profiles, these factors (benefit and risk timing) will enable us to investigate its role in adolescent processing of DTC ads.

We also propose to determine whether the severity of the risk within each condition influences adolescent decision-making in relation to DTC. Risk perceptions and risk taking have been active topics of exploration with regard to adolescents and thus the severity of the risks may play a role in determining whether and how adolescents attend to the benefit-risk profile of the prescription drugs they see advertised. This factor will also help us generalize further to different types of products, although we recognize that it will not cover the gamut of prescription drug products.

Although the variables we are examining are all attributes of the drug products themselves and do not reflect particular behaviors of sponsors, this information will be crucial in determining what types of prescription drugs may require additional care when advertising them to adolescents. One strength of the proposed study is that with two different medical conditions and multiple different variations in the benefit and risk profiles of the drugs, we will obtain a good representation of adolescent response to DTC ads. Moreover, in comparing adolescents with adults, we will have a better idea of how perceptions and understanding of benefits and risks in DTC ads differ across this part of the lifespan.

Design Overview

Within each of the two medical conditions, we will randomly assign participants to one of a number of experimental conditions. We propose for each medical condition a 2 (risk onset: immediate, delayed) × 2 (benefit onset: immediate, delayed) × 2 (risk severity: high, low) factorial design, based on the rationale in the prior section.

We will use the same risk (within medical conditions) to control for differences in severity (e.g. dry skin vs. cancer) and avoid confounds.

TABLE 1—EXPERIMENTAL CONDITIONS WITH THREE INDEPENDENT VARIABLES

Comparison group	Variable 1: Timing of risk: Immediate				Variable 1: Timing of risk: Delayed			
	Variable 2: Severity of risk (low)		Variable 2: Severity of risk (high)		Variable 2: Severity of risk (low)		Variable 2: Severity of risk (high)	
	Variable 3: Timing of benefit (immediate)	Variable 3: Timing of benefit (delayed)	Variable 3: Timing of benefit (immediate)	Variable 3: Timing of benefit (delayed)	Variable 3: Timing of benefit (immediate)	Variable 3: Timing of benefit (delayed)	Variable 3: Timing of benefit (immediate)	Variable 3: Timing of benefit (delayed)
Study 1 (Medical condition A, Acne)								
Younger adolescents (13–15)	Group 1	Group 2	Group 3	Group 4	Group 5	Group 6	Group 7	Group 8.
Older adolescents ... (16–19)	Group 9	Group 10	Group 11	Group 12	Group 13	Group 14	Group 15	Group 16.
Young adults ..... (25–30)	Group 17	Group 18	Group 19	Group 20	Group 21	Group 22	Group 23	Group 24.
Parents	Group 25	Group 26	Group 27	Group 28	Group 29	Group 30	Group 31	Group 32.
Study 2 (Medical condition B, ADHD)								
Younger adolescents (13–15)	Group 1	Group 2	Group 3	Group 4	Group 5	Group 6	Group 7	Group 8.
Older adolescents ... (16–19)	Group 9	Group 10	Group 11	Group 12	Group 13	Group 14	Group 15	Group 16.

TABLE 1—EXPERIMENTAL CONDITIONS WITH THREE INDEPENDENT VARIABLES—Continued

Comparison group	Variable 1: Timing of risk: Immediate				Variable 1: Timing of risk: Delayed			
	Variable 2: Severity of risk (low)		Variable 2: Severity of risk (high)		Variable 2: Severity of risk (low)		Variable 2: Severity of risk (high)	
	Variable 3: Timing of benefit (immediate)	Variable 3: Timing of benefit (delayed)	Variable 3: Timing of benefit (immediate)	Variable 3: Timing of benefit (delayed)	Variable 3: Timing of benefit (immediate)	Variable 3: Timing of benefit (delayed)	Variable 3: Timing of benefit (immediate)	Variable 3: Timing of benefit (delayed)
Young adults (25–30)	Group 17	Group 18	Group 19	Group 20	Group 21	Group 22	Group 23	Group 24.
Parents	Group 25	Group 26	Group 27	Group 28	Group 29	Group 30	Group 31	Group 32.

We will conduct the studies with two medical conditions that have particular relevance for adolescents—acne and ADHD. For acne, we will target a sample that has been diagnosed with, or, through self-report, has experienced the condition. For ADHD, we will target a sample that has been diagnosed with the condition. If an appropriate sample size cannot be obtained for ADHD, we will extend the sample by including adolescents with family members who have been diagnosed with ADHD to help ensure participants are interested in and paying attention to the topic.

The study will enroll three specific age groups (13–15, 16–19, and 25–30). We propose to explore differences in effects of the ad manipulations across these three age groups on a variety of outcomes, including benefit and risk recall, benefit and risk perceptions, and behavioral intentions. Certain ads may communicate more or less effectively with specific age groups. The presentation of immediate versus delayed risks, for example, might differentially affect teens and young adults. Additionally, we propose to examine factors unique to adolescent healthcare including relationship between parent and child, issues of stigma, and risk taking.

We will also recruit parents of the two younger age groups into the sample to explore potential differences between teen and parental perceptions. There are three reasons for including parents in the sample:

1. Adolescents and adults bring varied experiences and developmental capacities to everyday decisions. As a result, they may differ both in their perceptions of risks and benefits and in their evaluations of DTC. Matching parents and adolescents in the sample will allow us to conduct additional analyses to explore similarities and differences between parental and adolescent perceptions. By having parents of two age groups, we can compare these groups to see if there are differences in parent-child risk-perception concordance/discordance across adolescence as a function of age.

2. Parents will serve as a fourth age group, which will allow us to conduct additional comparisons between the age categories. Increasing the number of age categories will allow us to look for differences between a greater range of age groups, and to see if clear patterns of age differences exist (e.g., it could be that the most significant differences are observed when comparing young adolescents and those over 30 years of age).

3. Including parent-child dyads will address the need for empirical data comparing adolescents' and their parents' evaluations of DTC prescription drug advertising.

Select experimental conditions will be pretested with 1061 participants to assess questionnaire wording and implementation. Based on power analyses, the main study will include 5,120 completed participants, which will allow us enough power to test several possible covariates (factors other than our manipulated variables) that may have effects, such as demographic information.

The protocol will take place via the Internet. Participants will be randomly assigned to view one Web site ad for a fictitious prescription drug that treats either acne or ADHD and will answer questions about it. The entire process is expected to take no longer than 30 minutes. This will be a one-time (rather than annual) collection of information.

FDA estimates the burden of this collection of information as follows:

TABLE 2—ESTIMATED ANNUAL REPORTING BURDEN [1]

Activity	Number of respondents	Number of responses per respondent	Total annual responses	Average burden per response	Total hours
Pretest 1 screener (½ acne, ½ ADHD)	2,812	1	2,812	.08 (5 min.)	225
Pretest 2 screener (all one illness)	6,400	1	6,400	.08 (5 min.)	512
Main study screener (acne)	6,400	1	6,400	.08 (5 min.)	512
Main study screener (ADHD)	25,600	1	25,600	.08 (5 min.)	2,048
Pretest 1	450	1	450	0.5 (30 min.)	225
Pretest 2	700	1	700	0.5 (30 min.)	350
Main study, 13–15 year olds (both acne and ADHD).	1,300	1	1,300	0.5 (30 min.)	650
Main study, 16–19-year olds (both acne and ADHD).	1,300	1	1,300	0.5 (30 min.)	650
Main study, young adults (both acne and ADHD)	1,300	1	1,300	.5 (30 min.)	650
Main study, parents (both acne and ADHD)	1,300	1	1,300	.5 (30 min.)	650
Total pretest/study participants	6,350				

TABLE 2—ESTIMATED ANNUAL REPORTING BURDEN [1]—Continued

Activity	Number of respondents	Number of responses per respondent	Total annual responses	Average burden per response	Total hours
Total					6,472

[1] There are no capital costs or operating and maintenance costs associated with this collection of information.

The total respondent sample for this data collection is 6,350, including the two pretests. We estimate the response burden to be 30 minutes, for a total collection burden, including screeners, of 6,472 hours.

References

1. Southwell, B. G., ''On the Need for a Life-Span Approach to Health Campaign Evaluation.'' *Health Communication,* 25 (6–7), 525–528, 2010.
2. Lerner, R. M. and L. Steinberg, ''The Scientific Study of Adolescent Development.'' In R. M. Lerner and L. Steinberg (Eds.), *Handbook of Adolescent Psychology* (3rd ed., Vol. 1: Individual Bases of Adolescent Development). Hoboken, NJ: John Wiley and Sons, 2009.
3. Erikson, E. H. *The Child and Society.* New York: Norton, 1963.
4. Erikson, E. H. *Dimensions of a New Identity.* New York: Norton, 1974.
5. Piaget, J. *The Origins of Intelligence in Children.* New York: Internal University Press, 1952.
6. Piaget, J. *The Child's Conception of the World.* Totowa, NJ: Littlefield, Adams, 1972.
7. Kohlberg, L. ''Stage and Sequence. The Cognitive Developmental Approach to Socialization.'' In D. A. Goslin (Ed.), *Handbook of Socialization Theory of Research* (pp. 347–380). Chicago: Rand McNally, 1969.
8. Rubia, K., S. Overmeyer, E. Taylor, et al., ''Functional Frontalisation with Age: Mapping Neurodevelopmental Trajectories with fMRI.'' [Clinical Trial Research Support, Non-U.S. Gov't.]. *Neuroscience and Biobehavioral Reviews,* 24(1), 13–19, 2000.
9. Goldberg, J. H., B. L. Halpern-Felsher, and S. G. Millstein, ''Beyond Invulnerability: The Importance of Benefits in Adolescents' Decision to Drink Alcohol.'' *Health Psychology,* 21(5), 477–484. doi: 10.1037/0278–6133.21.5.477, 2002.
10. Albert, D. and L. Steinberg, ''Judgment and Decision Making in Adolescence.'' *Journal of Research on Adolescence,* 21(1), 211–224. doi: 10.1111/j.1532–7795.2010.00724.x, 2011.

Dated: October 25, 2013.

Leslie Kux,

Assistant Commissioner for Policy.

[FR Doc. 2013–25963 Filed 10–30–13; 8:45 am]

BILLING CODE 4160–01–P

DEPARTMENT OF HEALTH AND HUMAN SERVICES

Food and Drug Administration

[Docket No. FDA–2013–N–0618]

Agency Information Collection Activities; Submission for Office of Management and Budget Review; Comment Request; Electronic Products

AGENCY: Food and Drug Administration, HHS.

ACTION: Notice.

SUMMARY: The Food and Drug Administration (FDA) is announcing that a proposed collection of information has been submitted to the Office of Management and Budget (OMB) for review and clearance under the Paperwork Reduction Act of 1995.

DATES: Fax written comments on the collection of information by December 2, 2013.

ADDRESSES: To ensure that comments on the information collection are received, OMB recommends that written comments be faxed to the Office of Information and Regulatory Affairs, OMB, Attn: FDA Desk Officer, FAX: 202–395–7285, or emailed to *oira_submission@omb.eop.gov.* All comments should be identified with the OMB control number 0910–0025. Also include the FDA docket number found in brackets in the heading of this document.

FOR FURTHER INFORMATION CONTACT: FDA PRA Staff, Office of Operations, Food and Drug Administration, 1350 Piccard Dr., PI50–400B, Rockville, MD 20850, *PRAStaff@fda.hhs.gov.*

SUPPLEMENTARY INFORMATION: In compliance with 44 U.S.C. 3507, FDA has submitted the following proposed collection of information to OMB for review and clearance.

Electronic Products—21 CFR Parts 1002 Through 1010 (OMB Control Number 0910–0025)—Extension

Under sections 532 through 542 of the Federal Food, Drug, and Cosmetic Act (the FD&C Act) (21 U.S.C. 360ii through 360ss), FDA has the responsibility to protect the public from unnecessary exposure of radiation from electronic products. The regulations issued under these authorities are listed in Title 21 of the Code of Federal Regulations, chapter I, subchapter J, parts 1000 through 1050 (21 CFR parts 1000 through 1050).

Section 532 of the FD&C Act directs the Secretary of the Department of Health and Human Services (the Secretary), to establish and carry out an electronic product radiation control program, including the development, issuance, and administration of performance standards to control the emission of electronic product radiation from electronic products. The program is designed to protect the public health and safety from electronic radiation, and the FD&C Act authorizes the Secretary to procure (by negotiation or otherwise) electronic products for research and testing purposes and to sell or otherwise dispose of such products. Section 534(g) of the FD&C Act directs the Secretary to review and evaluate industry testing programs on a continuing basis; and section 535(e) and (f) of the FD&C Act directs the Secretary to immediately notify manufacturers of, and ensure correction of, radiation defects or noncompliance with performance standards. Section 537(b) of the FD&C Act contains the authority to require manufacturers of electronic products to establish and maintain records (including testing records), make reports, and provide information to determine whether the manufacturer has acted in compliance.

The regulations under parts 1002 through 1010 specify reports to be provided by manufacturers and distributors to FDA and records to be maintained in the event of an investigation of a safety concern or a product recall. FDA conducts laboratory compliance testing of products covered by regulations for product standards in parts 1020, 1030, 1040, and 1050.

FDA details product-specific performance standards that specify information to be supplied with the product or require specific reports. The information collections are either specifically called for in the FD&C Act or were developed to aid the Agency in performing its obligations under the FD&C Act. The data reported to FDA and the records maintained are used by

FDA and the industry to make decisions and take actions that protect the public from radiation hazards presented by electronic products. This information refers to the identification of, location of, operational characteristics of, quality assurance programs for, and problem identification and correction of electronic products. The data provided to users and others are intended to encourage actions to reduce or eliminate radiation exposures.

FDA uses the following forms to aid respondents in the submission of information for this information collection:

FDA estimates the burden of this collection of information as follows:

- Form FDA 2579 ''Report of Assembly of a Diagnostic X-Ray System''
- Form FDA 2767 ''Notice of Availability of Sample Electronic Product''
- Form FDA 2877 ''Declaration for Imported Electronic Products Subject to Radiation Control Standards''
- Form FDA 3649 ''Accidental Radiation Occurrence (ARO)''
- Form FDA 3626 ''A Guide for the Submission of Initial Reports on Diagnostic X-Ray Systems and Their Major Components''
- Form FDA 3627 ''Diagnostic X-Ray CT Products Radiation Safety Report''
- Form FDA 3628 ''General Annual Report (Includes Medical, Analytical, and Industrial X-Ray Products Annual Report)''
- Form FDA 3629 ''Abbreviated Report''
- Form FDA 3630 ''Guide for Preparing Product Reports on Sunlamps and Sunlamp Products''
- Form FDA 3631 ''Guide for Preparing Annual Reports on Radiation Safety Testing of Sunlamp Products''
- Form FDA 3632 ''Guide for Preparing Product Reports on Lasers and Products Containing Lasers''
- Form FDA 3633''General Variance Request''
- Form FDA 3634 ''Television Products Annual Report''
- Form FDA 3635 ''Laser Light Show Notification''
- Form FDA 3636 ''Guide for Preparing Annual Reports on Radiation Safety Testing of Laser and Laser Light Show Products''
- Form FDA 3637 ''Laser Original Equipment Manufacturer (OEM) Report''
- Form FDA 3638 ''Guide for Filing Annual Reports for X-Ray Components and Systems''
- Form FDA 3639 ''Guidance for the Submission of Cabinet X-Ray System Reports Pursuant to 21 CFR 1020.40''
- Form FDA 3640 ''Reporting Guide for Laser Light Shows and Displays''
- Form FDA 3147 ''Application for a Variance From 21 CFR 1040.11(c) for a Laser Light Show, Display, or Device''
- Form FDA 3641 ''Cabinet X-Ray Annual Report''
- Form FDA 3642 ''General Correspondence''
- Form FDA 3643 ''Microwave Oven Products Annual Report''
- Form FDA 3644 ''Guide for Preparing Product Reports for Ultrasonic Therapy Products''
- Form FDA 3645 ''Guide for Preparing Annual Reports for Ultrasonic Therapy Products''
- Form FDA 3646 ''Mercury Vapor Lamp Products Radiation Safety Report''
- Form FDA 3647 ''Guide for Preparing Annual Reports on Radiation Safety Testing of Mercury Vapor Lamps''
- Form FDA 3659 ''Reporting and Compliance Guide for Television Products''
- Form FDA 3660 ''Guidance for Preparing Reports on Radiation Safety of Microwave Ovens''
- Form FDA 3661 ''A Guide for the Submission of an Abbreviated Report on X-Ray Tables, Cradles, Film Changers or Cassette Holders Intended for Diagnostic Use''
- Form FDA 3662 ''A Guide for the Submission of an Abbreviated Radiation Safety Report on Cephalometric Devices Intended for Diagnostic Use''
- Form FDA 3663 ''Abbreviated Reports on Radiation Safety for Microwave Products (Other than Microwave Ovens)''
- Form FDA 3801 ''Guide for Preparing Initial Reports and Model Change Reports on Medical Ultraviolet Lamps and Products Containing Such Lamps''

The respondents to this information collection are electronic product and x-ray manufacturers, importers, and assemblers. The burden estimates were derived by consultation with FDA and industry personnel, and are based on data collected from industry, including recent product report submissions. An evaluation of the type and scope of information requested was also used to derive some time estimates.

In the **Federal Register** of June 12, 2013 (78 FR 35279), FDA published a 60-day notice requesting public comment on the proposed collection of information. No comments were received.

FDA estimates the burden of this collection of information as follows:

TABLE 1—ESTIMATED ANNUAL REPORTING BURDEN [1]

Activity/21 CFR section	FDA form	Number of respondents	Number of responses per respondent	Total annual responses	Average burden per response	Total hours [2]
Product reports—1002.10(a)–(k).	3626—Diagnostic x-ray	1,500	1.1	1,650	24	39,600
	3627—CT x-ray					
	3639—Cabinet x-ray					
	3632—Laser					
	3640—Laser light show					
	3630—Sunlamp					
	3646—Mercury vapor lamp					
	3644—Ultrasonic therapy					
	3659—TV					
	3660—Microwave oven					
	3801—UV lamps					
Product safety or testing changes—1002.11(a)–(b).		1,000	1.5	1,500	0.5	750
Abbreviated reports—1002.12.	3629—General abbreviated report.	60	2	120	5	600
	3661—X-ray tables, etc.					
	3662—Cephalometric device.					

TABLE 1—ESTIMATED ANNUAL REPORTING BURDEN [1]—Continued

Activity/21 CFR section	FDA form	Number of respondents	Number of responses per respondent	Total annual responses	Average burden per response	Total hours [2]
	3663—Microwave products (non-oven).					
Annual reports—1002.13(a)–(b).	3628—General	1,500	1	1,500	18	27,000
	3634—TV					
	3638—Diagnostic x-ray					
	3641—Cabinet x-ray					
	3643—Microwave oven					
	3636—Laser					
	3631—Sunlamp					
	3647—Mercury vapor lamp					
	3645—Ultrasonic therapy					
Quarterly updates for new models—1002.13(c).		3	4	12	0.5	6
Accidental radiation occurrence reports—1002.20.	3649—ARO	15	6	90	2	180
Exemption requests—1002.50(a) and 1002.51.	3642—General correspondence.	10	1	10	1	10
Product and sample information—1005.10.	2767—Sample product	5	1	5	0.1	1
Identification information and compliance status—1005.25.	2877—Imports declaration	1,000	20	20,000	0.2	4,000
Alternate means of certification—1010.2(d).		1	2	2	5	10
Variance—1010.4(b)	3633—General variance request.	350	1	350	1.2	420
	3147—Laser show variance request.					
	3635—Laser show notification.					
Exemption from performance standards—1010.5(c) and (d).		1	1	1	22	22
Alternate test procedures—1010.13.		1	1	1	10	10
Report of assembly of diagnostic x-ray components—1020.30(d), (d)(1), and (d)(2).	2579—Assembler report	2,000	14	28,000	0.30	8,400
Microwave oven exemption from warning labels—1030.10(c)(6)(iv).		1	1	1	1	1
Laser products registration—1040.10(a)(3)(i).	3637—Original equipment manufacturer (OEM) report.	50	3	150	3	450
Total						81,460

[1] There are no capital costs or operating and maintenance costs associated with this collection of information.
[2] Total hours have been rounded.

TABLE 2—ESTIMATED ANNUAL RECORDKEEPING BURDEN [1]

Activity/21 CFR section	Number of recordkeepers	Number of records per recordkeeper	Total annual records	Average burden per recordkeeping	Total hours [2]
Manufacturers records—1002.30 and 1002.31(a)	1,600	1,650	2,640,000	0.12	316,800
Dealer/distributor records—1002.40 and 1002.41	3,000	50	150,000	0.05	7,500
Information on diagnostic x-ray systems—1020.30(g)	50	1	50	0.5	25
Laser products distribution records—1040.10(a)(3)(ii)	50	1	50	1	50
Total					324,375

[1] There are no capital costs or operating and maintenance costs associated with this collection of information.
[2] Total hours have been rounded.

TABLE 3—ESTIMATED ANNUAL THIRD-PARTY DISCLOSURE BURDEN [1]

Activity/21 CFR section	Number of respondents	Number of disclosures per respondent	Total annual disclosures	Average burden per disclosure	Total hours [2]
Technical and safety information for users—1002.3	1	1	1	12	12
Dealer/distributor records—1002.40 and 1002.41	50	3	150	1	150
Television receiver critical component warning—1020.10(c)(4)	1	1	1	1	1
Cold cathode tubes—1020.20(c)(4)	1	1	1	1	1
Information on diagnostic x-ray systems—1020.30(g)	100	2	200	55	11,000
Statement of maximum line current of x-ray systems—1020.30(g)(2)	15	1	15	10	150
Diagnostic x-ray system safety and technical information—1020.30(h)(1)–(h)(4)	100	2	200	200	40,000
Fluoroscopic x-ray system safety and technical information—1020.30(h)(5)–(h)(6) and 1020.32(a)(1), (g), and (j)(4)	15	2	30	25	750
CT equipment—1020.33(c)–(d), (g)(4), and (j)	25	2	50	150	7,500
Cabinet x-ray systems information—1020.40(c)(9)(i)–(c)(9)(ii)	30	2	60	40	2,400
Microwave oven radiation safety instructions—1030.10(c)(4)	1	1	1	20	20
Microwave oven safety information and instructions—1030.10(c)(5)(i)–(c)(5)(iv)	1	1	1	20	20
Microwave oven warning labels—1030.10(c)(6)(iii)	1	1	1	1	1
Laser products information—1040.10(h)(1)(i)–(h)(1)(vi)	1,000	1.2	1,200	20	24,000
Laser product service information—1040.10(h)(2)(i)–(h)(2)(ii)	1,000	1.2	1,200	20	24,000
Medical laser product instructions—1040.11(a)(2)	35	1	35	10	350
Sunlamp products instructions—1040.20	10	5	50	10	500
Mercury vapor lamp labeling—1040.30(c)(1)(ii)	2	1	2	1	2
Mercury vapor lamp permanently affixed labels—1040.30(c)(2)	2	1	2	1	2
Ultrasonic therapy products—1050.10(d)(1)–(d)(4), (f)(1), and (f)(2)(iii)	5	1	5	56	280
Total					111,139

[1] There are no capital costs or operating and maintenance costs associated with this collection of information.
[2] Total hours have been rounded.

The following requirements are not subject to review by OMB because they do not constitute a ''collection of information'' under the PRA: Sections 1002.31(c), 1003.10(a) through (c), 1003.11(a)(3) and (b), 1003.20(a) through (h), 1003.21(a) through (d), 1003.22(a) and (b), 1003.30(a) and (b), 1003.31(a) and (b), 1004.2(a) through (i), 1004.3(a) through (i), 1004.4(a) through (h), 1005.21(a) through (c), and 1005.22(b). These requirements apply to the collection of information during the conduct of investigations or audits (5 CFR 1320.4).

The following labeling requirements are not subject to review under the PRA because they are a public disclosure of information originally supplied by the Federal Government to the recipient for the purpose of disclosure to the public (5 CFR 1320.3(c)(2)): Sections 1030.10(c)(6); 1040.10(g); 1040.20(d)(1)(i), (d)(2)(i), and (d)(2)(iii); and 1040.30(c)(1).

Dated: October 25, 2013.

Leslie Kux,

Assistant Commissioner for Policy.

[FR Doc. 2013–25962 Filed 10–30–13; 8:45 am]

BILLING CODE 4160–01–P

DEPARTMENT OF HEALTH AND HUMAN SERVICES

Food and Drug Administration

[Docket No. FDA–2012–D–0530]

Agency Information Collection Activities; Submission for Office of Management and Budget Review; Comment Request; Guidance on Medical Devices: The Pre-Submission Program and Meetings With FDA Staff

AGENCY: Food and Drug Administration, HHS.

ACTION: Notice.

SUMMARY: The Food and Drug Administration (FDA) is announcing that a proposed collection of information has been submitted to the Office of Management and Budget (OMB) for review and clearance under the Paperwork Reduction Act of 1995.

DATES: Fax written comments on the collection of information by December 2, 2013.

ADDRESSES: To ensure that comments on the information collection are received, OMB recommends that written comments be faxed to the Office of Information and Regulatory Affairs, OMB, Attn: FDA Desk Officer, FAX: 202–395–7285, or emailed to *oira_submission@omb.eop.gov.* All comments should be identified with the OMB control number 0910—NEW and Title: ''Medical Devices: The Pre-Submission Program and Meetings with FDA Staff.'' Also include the FDA docket number found in brackets in the heading of this document.

FOR FURTHER INFORMATION CONTACT: FDA PRA Staff, Office of Operations, Food and Drug Administration, 1350 Piccard Dr., PI50–400B, Rockville, MD 20850, *PRAStaff@fda.hhs.gov.*

SUPPLEMENTARY INFORMATION: In compliance with 44 U.S.C. 3507, FDA has submitted the following proposed

collection of information to OMB for review and clearance.

Guidance on Medical Devices: Pre-Submission Program and Meetings With FDA Staff—(OMB Control Number 0910—NEW)

This guidance describes the Pre-Submission program for medical devices reviewed in the Center for Devices and Radiological Health (CDRH) and the Center for Biologics Evaluation and Research (CBER). The guidance provides recommendations regarding the information that should be submitted in a Pre-Submission Package and procedures that should be followed for meetings between CDRH and CBER staff and industry representatives or application sponsors. In addition to Pre-Submissions, the guidance addresses other feedback mechanisms including Informational Meetings, Study Risk Determinations, Formal Early Collaboration Meetings, and Submission Issue Meetings and the procedures to request feedback using these mechanisms. When approved by OMB, this guidance document will supersede ''Pre-IDE Program: Issues and Answers—Blue Book Memo D99–1'' dated March 25, 1999.

A Pre-Submission is defined as a formal written request from an applicant for feedback from FDA to be provided in the form of a formal written response or, if the manufacturer chooses, a meeting or teleconference in which the feedback is documented in meeting minutes. A Pre-Submission is appropriate when FDA's feedback on specific questions is necessary to guide product development and/or application preparation. The proposed collections of information are necessary to allow the Agency to receive Pre-Submission Packages in order to implement this voluntary submission program.

Over time, the FDA pre-investigational device exemption (pre-IDE) program evolved to include feedback on premarket approval (PMA) applications, humanitarian device exemption applications, Evaluation of Automatic Class III Designations (de novo petitions), 510(k) submissions, Clinical Laboratory Improvement Amendments categorization requests, as well as to address questions related to whether a clinical study requires submission of an IDE. During discussions with representatives of the medical device industry in the development of the Agency's recommendations for the Medical Device User Fee Amendments of 2012 (MDUFA III) (Pub. L. 112–144), both the industry and the Agency agreed that the Pre-Submission (formerly pre-IDE) process provided important additional transparency to the IDE and premarket review processes. In response, the Secretary's 2012 Commitment Letter to Congress (MDUFA III Commitment Letter) included FDA's commitment to institute a structured process for managing Pre-Submissions.

To fulfill the Secretary's commitment to the industry, this final guidance: (1) Describes the Pre-Submission program (formerly the IDE program) for medical devices reviewed in CDRH and CBER; (2) describes other feedback mechanisms including Informational Meetings, Study Risk Determinations, Formal Early Collaboration Meetings, and Submission Issue Meetings; (3) assists device manufacturers and their representatives who seek meetings with the FDA by providing guidance and recommendations regarding information that should be included in a Pre-Submission Package or other request for feedback; and (4) provides guidance as to the procedures that CDRH and CBER intend to follow when industry representatives or application sponsors request a meeting with review staff.

In the **Federal Register** of July 13, 2012 (77 FR 41413), FDA published a notice of availability combined with a 60-day notice requesting public comment on the proposed collection of information. FDA received no PRA-related comments.

FDA estimates the burden of this collection of information as follows:

TABLE 1—ESTIMATED ANNUAL REPORTING BURDEN [1]

FDA center	Number of respondents	Annual frequency per response	Total annual responses	Hours per response	Total hours
CDRH	2,465	1	2,465	137	337,705
CBER	79	1	79	137	10,823
Total					348,528

[1] There are no capital costs or operating and maintenance costs associated with this collection of information.

Respondents are medical device manufacturers subject to FDA's laws and regulations. FDA estimates that it will receive approximately 2,544 pre-submission packages annually. The Agency reached this estimate by reviewing the number of submissions received by the Agency under the Pre-IDE program over the past 10 years. Based on FDA's experience with the Pre-IDE program, FDA expects the Pre-Submission program to continue to be utilized as a viable program in the future and expects that the number of pre-submission packages will increase over its current rate and reach a steady state of approximately 2,544 submissions per year.

FDA estimates from past experience with the Pre-IDE program that the complete process involved with the program takes approximately 137 hours. This average is based upon estimates by FDA administrative and technical staff that is familiar with the requirements for submission of a Pre-Submission and related materials, have consulted and advised manufacturers on these requirements, and have reviewed the documentation submitted.

Therefore, the total reporting burden hours is estimated to be 348,528 hours.

TABLE 2—ESTIMATED ANNUAL REPORTING BURDEN [1]

Number of respondents	Total burden hours annualized	Hourly wage rate	Total cost annualized
2,544	137	$150	$52,279,200

[1] There are no capital costs or operating and maintenance costs associated with this collection of information.

The average to industry per hour for this type of work is $150, resulting in a cost of $20,550 per respondent. The estimated submission cost of $20,550 multiplied by 2,544 submissions per year equals $52,279,200, which is the aggregated industry reporting cost annualized.

FDA's annual estimate of 2,544 submissions is based on experienced trends over the past several years. FDA's administrative and technical staffs, who are familiar with the requirements for current pre-submissions, estimate that an average of 137 hours is required to prepare a pre-submission. However, we recognize there is a variance in the preparation submission because of the vast and varying complexities of medical devices.

Dated: October 25, 2013.

Leslie Kux,

Assistant Commissioner for Policy.

[FR Doc. 2013–25964 Filed 10–30–13; 8:45 am]

BILLING CODE 4160–01–P

DEPARTMENT OF HEALTH AND HUMAN SERVICES

Food and Drug Administration

[Docket No. FDA–2013–N–0578]

Agency Information Collection Activities; Submission for Office of Management and Budget Review; Comment Request; General Licensing Provisions: Biologics License Application, Changes to an Approved Application, Labeling, Revocation and Suspension, Postmarketing Studies Status Reports, and Forms FDA 356h and 2567

AGENCY: Food and Drug Administration, HHS.

ACTION: Notice.

SUMMARY: The Food and Drug Administration (FDA) is announcing that a proposed collection of information has been submitted to the Office of Management and Budget (OMB) for review and clearance under the Paperwork Reduction Act of 1995.

DATES: Fax written comments on the collection of information by December 2, 2013.

ADDRESSES: To ensure that comments on the information collection are received, OMB recommends that written comments be faxed to the Office of Information and Regulatory Affairs, OMB, Attn: FDA Desk Officer, FAX: 202–395–7285, or emailed to *oira_submission@omb.eop.gov.* All comments should be identified with the OMB control number 0910–0338. Also include the FDA docket number found in brackets in the heading of this document.

FOR FURTHER INFORMATION CONTACT: FDA PRA Staff, Office of Operations, Food and Drug Administration, 1350 Piccard Dr., PI50–400B, Rockville, MD 20850, *PRAStaff@fda.hhs.gov.*

SUPPLEMENTARY INFORMATION: In compliance with 44 U.S.C. 3507, FDA has submitted the following proposed collection of information to OMB for review and clearance.

General Licensing Provisions: Biologics License Application, Changes to an Approved Application, Labeling, Revocation and Suspension, Postmarketing Studies Status Reports, and Forms FDA 356h and 2567—(0910–0338)—Extension

Under section 351 of the Public Health Service Act (the PHS Act) (42 U.S.C. 262), manufacturers of biological products must submit a license application for FDA review and approval before marketing a biological product in interstate commerce. Licenses may be issued only upon showing that the establishment and the products for which a license is desired meets standards prescribed in regulations designed to ensure the continued safety, purity, and potency of such products. All such licenses are issued, suspended, and revoked as prescribed by regulations in part 601 (21 CFR part 601).

Section 130(a) of the Food and Drug Administration Modernization Act of 1997 (Pub. L. 105–115) amended the Federal Food, Drug, and Cosmetic Act (the FD&C Act) by adding a new provision (section 506B of the FD&C Act (21 U.S.C. 356b)) requiring reports of postmarketing studies for approved human drugs and licensed biological products. Section 506B of the FD&C Act provides FDA with additional authority to monitor the progress of postmarketing studies that applicants have made a commitment to conduct and requires the Agency to make publicly available information that pertains to the status of these studies. Under section 506B(a) of the FD&C Act, applicants that have committed to conduct a postmarketing study for an approved human drug or licensed biological product must submit to FDA a status report of the progress of the study or the reasons for the failure of the applicant to conduct the study. This report must be submitted within 1 year after the U.S. approval of the application and then annually until the study is completed or terminated.

A summary of the collection of information requirements follows:

Section 601.2(a) requires a manufacturer of a biological product to submit an application on forms prescribed for such purposes with accompanying data and information, including certain labeling information, to FDA for approval to market a product in interstate commerce. The container and package labeling requirements are provided under §§ 610.60 through 610.65 (21 CFR 610.60 through 610.65). The estimate for these regulations is included in the estimate under § 601.2(a) in table 1 of this document.

Section 601.5(a) requires a manufacturer to submit to FDA notice of its intention to discontinue manufacture of a product or all products. Section 601.6(a) requires the manufacturer to notify selling agents and distributors upon suspension of its license, and provide FDA of such notification.

Section 601.12(a)(2) requires, generally, that the holder of an approved Biologics Licensing Application (BLA) must assess the effects of a manufacturing change before distributing a biological product made with the change. Section 601.12(a)(4) requires, generally, that the applicant must promptly revise all promotional labeling and advertising to make it consistent with any labeling changes implemented. Section 601.12(a)(5) requires the applicant to include a list of all changes contained in the supplement or annual report; for supplements, this list must be provided in the cover letter. The burden estimates for § 601.12(a)(2) are included in the

estimates for supplements (§§ 601.12(b) and (c)) and annual reports (§ 601.12(d)). The burden estimates for § 601.12(a)(4) are included in the estimates under 601.12(f)(4) in table 1 of this document.

Sections 601.12(b)(1), (b)(3), (c)(1), (c)(3), (c)(5), (d)(1), and (d)(3) require applicants to follow specific procedures to submit information to FDA of any changes in the product, production process, quality controls, equipment, facilities, or responsible personnel established in an approved license application. The appropriate procedure depends on the potential for the change to have a substantial, moderate, or minimal adverse effect on the identity, strength, quality, purity, or potency of the products as they may relate to the safety or effectiveness of the product. Under § 601.12(b)(4), an applicant may ask FDA to expedite its review of a supplement for public health reasons or if a delay in making the change described in it would impose an extraordinary hardship of the applicant. The burden estimate for § 601.12(b)(4) is minimal and included in the estimate under § 601.12(b)(1) and (b)(3) in table 1 of this document.

Section 601.12(e) requires applicants to submit a protocol, or change to a protocol, as a supplement requiring FDA approval before distributing the product. Section 601.12(f)(1), (f)(2), and (f)(3) requires applicants to follow specific procedures to report certain labeling changes to FDA. Section 601.12(f)(4) requires applicants to report to FDA advertising and promotional labeling and any changes.

Under § 601.14, the content of labeling required in 21 CFR 201.100(d)(3) must be in electronic format and in a form that FDA can process, review, and archive. This requirement is in addition to the provisions of §§ 601.2(a) and 601.12(f). The burden estimate for § 601.14 is minimal and included in the estimate under §§ 601.2(a) (BLAs) and 601.12(f)(1), (f)(2), and (f)(3) (labeling supplements and annual reports) in table 1 of this document.

Section 601.45 requires applicants of biological products for serious or life-threatening illnesses to submit to the Agency for consideration, during the pre-approval review period, copies of all promotional materials, including promotional labeling as well as advertisements.

In addition to §§ 601.2 and 601.12, there are other regulations in 21 CFR parts 640, 660, and 680 that relate to information to be submitted in a license application or supplement for certain blood or allergenic products as follows: §§ 640.6; 640.17; 640.21(c); 640.22(c); 640.25(c); 640.56(c); 640.64(c); 640.74(a) and (b)(2); 660.51(a)(4); and 680.1(b)(2)(iii) and (d).

In table 1 of this document, the burden associated with the information collection requirements in the applicable regulations is included in the burden estimate for §§ 601.2 and/or 601.12. A regulation may be listed under more than one subsection of § 601.12 due to the type of category under which a change to an approved application may be submitted.

There are also additional container and/or package labeling requirements for certain licensed biological products including: § 640.74(b)(3) and (4) for Source Plasma Liquid; § 640.84(a) and (c) for Albumin; § 640.94(a) for Plasma Protein Fraction; § 660.2(c) for Antibody to Hepatitis B Surface Antigen; § 660.28(a), (b), and (c) for Blood Grouping Reagent; § 660.35(a), (c through g), and (i through m) for Reagent Red Blood Cells; § 660.45 for Hepatitis B Surface Antigen; and § 660.55(a) and (b) for Anti-Human Globulin. The burden associated with the additional labeling requirements for submission of a license application for these certain biological products is minimal because the majority of the burden is associated with the requirements under §§ 610.60 through 610.65 or 21 CFR 809.10. Therefore, the burden estimates for these regulations are included in the estimate under §§ 610.60 through 610.65 in table 1 of this document. The burden estimates associated with § 809.10 are approved under OMB control number 0910–0485.

Section 601.25(b) requests interested persons to submit, for review and evaluation by an advisory review panel, published and unpublished data and information pertinent to a designated category of biological products that have been licensed prior to July 1, 1972. Section 601.26(f) requires that licensees submit to FDA a written statement intended to show that studies adequate and appropriate to resolve the questions raised about a biological product have been undertaken for a product if designated as requiring further study under the reclassification procedures. Under § 601.25(b), FDA estimates no further burden for this regulation, and therefore this regulation is not included in table 1 of this document. Under section 601.26(f), FDA estimates no burden for this regulation since there are no products designated to require further study and none are predicted in the future. However, FDA is using an estimate of 1 for calculation purposes. Based on the possible reclassification of a product, the labeling for the product may need to be revised, or a manufacturer, on its own initiative, may deem it necessary for further study. As a result, any changes to product labeling would be reported under the appropriate subsection of § 601.12.

Section 601.27(a) requires that applications for new biological products contain data that are adequate to assess the safety and effectiveness of the biological product for the claimed indications in pediatric subpopulations, and to support dosing and administration information. Section 601.27(b) provides that an applicant may request a deferred submission of some or all assessments of safety and effectiveness required under § 601.27(a) until after licensing the product for use in adults. Section 601.27(c) provides that an applicant may request a full or partial waiver of the requirements under § 601.27(a) with adequate justification. The burden estimates for § 601.27(a) are included in the burden estimate under § 601.2(a) in table 1 of this document since these regulations deal with information to be provided in an application.

Section 601.28 requires sponsors of licensed biological products to submit the information in § 601.28(a), (b), and (c) to the Center for Biologics Evaluation and Research (CBER) or to the Center for Drug Evaluation and Research (CDER) each year, within 60 days of the anniversary date of approval of the license. Section 601.28(a) requires sponsors to submit to FDA a brief summary stating whether labeling supplements for pediatric use have been submitted and whether new studies in the pediatric population to support appropriate labeling for the pediatric population have been initiated. Section 601.28(b) requires sponsors to submit to FDA an analysis of available safety and efficacy data in the pediatric population and changes proposed in the labeling based on this information. Section 601.28(c) requires sponsors to submit to FDA a statement on the current status of any postmarketing studies in the pediatric population performed by, on or behalf of, the applicant. If the postmarketing studies were required or agreed to, the status of these studies is to be reported under § 601.70 rather than under this section.

Sections 601.33 through 601.35 clarify the information to be submitted in an application to FDA to evaluate the safety and effectiveness of radiopharmaceuticals intended for in vivo administration for diagnostic and monitoring use. The burden estimates for §§ 601.33 through 601.35 are included in the burden estimate under § 601.2(a) in table 1 of this document

since these regulations deal with information to be provided in an application.

Section 601.70(b) requires each applicant of a licensed biological product to submit annually a report to FDA on the status of postmarketing studies for each approved product application. Each annual postmarketing status report must be accompanied by a completed transmittal Form FDA 2252 (Form FDA 2252 approved under OMB control number 0910–0001). Under § 601.70(d), two copies of the annual report shall be submitted to FDA.

Sections 601.91 through 601.94 concern biological products for which human efficacy studies are not ethical or feasible. Section 601.91(b)(2) requires, in certain circumstances, such postmarketing restrictions as are needed to ensure the safe use of the biological product. Section 601.91(b)(3) requires applicants to prepare and provide labeling with relevant information to patients or potential patients for biological products approved under part 601, subpart H, when human efficacy studies are not ethical or feasible (or based on evidence of effectiveness from studies in animals). Section 601.93 provides that biological products approved under subpart H are subject to the postmarketing recordkeeping and safety reporting applicable to all approved biological products. Section 601.94 requires applicants under subpart H to submit to the Agency for consideration during preapproval review period copies of all promotional materials including promotional labeling as well as advertisements. Under § 601.91(b)(2) and § 601.93, any potential postmarketing reports and/or recordkeeping burdens would be included under the adverse experience reporting (AER) requirements under 21 CFR part 600 (OMB control number 0910–0308). Therefore, any burdens associated with these requirements would be reported under the AER information collection requirements (OMB control number 0910–0308). The burden estimate for § 601.91(b)(3) is included in the estimate under §§ 610.60 through 610.65.

Section 610.9(a) (21 CFR 610.9(a)) requires the applicant to present certain information, in the form of a license application or supplement to the application, for a modification of any particular test method or manufacturing process or the conditions which it is conducted under the biologics regulations. The burden estimate for § 610.9(a) is included in the estimate under §§ 601.2(a) and 601.12(b) and (c) in table 1 of this document.

Section 610.11(g)(2) (21 CFR 610.11(g)(2)) provides that a manufacturer of certain biological products may request an exemption from the general safety test (GST) requirements contained in subpart H. Under § 610.11(g)(2), FDA requires only those manufacturers of biological products requesting an exemption from the GST to submit additional information as part of a license application or supplement to an approved license application. Therefore, the burden estimate for § 610.11(g)(2) is included in the estimate under §§ 601.2(a) and 601.12(b) in table 1 of this document.

Under 21 CFR 610.15(d) (21 CFR 610.15(d)), the Director of CBER or the Director of CDER may approve, as appropriate, a manufacturer's request for exceptions or alternatives to the regulation for constituent materials. Manufacturers seeking approval of an exception or alternative must submit a request in writing with a brief statement describing the basis for the request and the supporting data.

Section 640.120 requires establishments to submit a request for an exception or alternative to any requirement in the biologics regulations regarding blood, blood components, or blood products. For licensed establishments, a request for an exception or alternative must be submitted in accordance with § 601.12. The burden estimate for § 640.120 is included in the estimate under § 601.12(b) in table 1 of this document.

Section 680.1(c) requires manufacturers to update annually their license file with the list of source materials and the suppliers of the materials. Section 680.1(b)(3)(iv) requires manufacturers to notify FDA when certain diseases are detected in source materials.

Sections 600.15(b) and 610.53(d) (21 CFR 610.53(d)) require the submission of a request for an exemption or modification regarding the temperature requirements during shipment and from dating periods, respectively, for certain biological products. Section 606.110(b) (21 CFR 606.110(b)) requires the submission of a request for approval to perform plasmapheresis of donors who do not meet certain donor requirements for the collection of plasma containing rare antibodies. Under §§ 600.15(b), 610.53(d), and 606.110(b), a request for an exemption or modification to the requirements would be submitted as a supplement. Therefore, the burden hours for any submissions under §§ 600.15(b), 610.53(d), and 606.110(b) are included in the estimates under § 601.12(b) in table 1 of this document.

In July 1997, FDA revised Form FDA 356h ''Application to Market a New Drug, Biologic, or an Antibiotic Drug for Human Use'' to harmonize application procedures between CBER and CDER. The application form serves primarily as a checklist for firms to gather and submit certain information to FDA. As such, the form, now entitled ''Application to Market a New or Abbreviated New Drug or Biologic for Human Use'' helps to ensure that the application is complete and contains all the necessary information, so that delays due to lack of information may be eliminated. In addition, the form provides key information to FDA for efficient handling and distribution to the appropriate staff for review. The estimated burden hours for nonbiological product submissions to CDER using Form FDA 356h are approved under OMB control number 0910–0001 (an estimated 3,200 submissions × 24 hours = 76,800 hours).

Form FDA 2567 ''Transmittal of Labels and Circulars'' may be used by manufacturers of licensed biological products to submit labeling (e.g., circulars, package labels, container labels, etc.) and labeling changes for FDA review and approval. For advertisements and promotional labeling, manufacturers of licensed biological products may submit to CBER either Form FDA 2567 or 2253. Form FDA 2253 was previously used only by drug manufacturers regulated by CDER. In August 1998, FDA revised and harmonized Form FDA 2253 so the form may be used to transmit specimens of promotional labeling and advertisements for biological products as well as for prescription drugs and antibiotics. The revised, harmonized form updates the information about the types of promotional materials and the codes that are used to clarify the type of advertisement or labeling submitted, clarifies the intended audience for the advertisements or promotional labeling (e.g., consumers, professionals, news services), and helps ensure that the submission is complete. Form FDA 2253 is approved under OMB control number 0910–0001.

Under tables 1 and 2 of this document, the numbers of respondents are based on the estimated annual number of manufacturers that submitted the required information to FDA or the number of submissions FDA received in fiscal year 2012. Based on information obtained from FDA's database systems, there are an estimated 323 licensed biologics manufacturers. The total annual responses are based on the estimated number of submissions (i.e., license applications, labeling and other

supplements, protocols, advertising and promotional labeling, notifications) for a particular product received annually by FDA. The hours per response are based on information provided by industry and past FDA experience with the various submissions or notifications. The hours per response include the time estimated to prepare the various submissions or notifications to FDA, and, as applicable, the time required to fill out the appropriate form and collate the documentation. Additional information regarding these estimates is provided below as necessary.

Under §§ 601.2 and 601.12, the estimated hours per response are based on the average number of hours to submit the various submissions. The estimated average number of hours is based on the range of hours to complete a very basic application or supplement and a complex application or supplement.

Under § 601.6(a), the total annual responses are based on FDA estimates that establishments may notify an average of 20 selling agents and distributors of such suspension, and provide FDA of such notification. The number of respondents is based on the estimated annual number of suspensions of a biologic license.

Under §§ 601.12(f)(4) and 601.45, manufacturers of biological products may use either Form FDA 2567 or Form FDA 2253 to submit advertising and promotional labeling. Based on information obtained from FDA's database system, there were an estimated 10,578 submissions of advertising and promotional labeling.

Under §§ 601.28 and 601.70(b), FDA estimates that it takes an applicant approximately 24 hours (8 hours per study × 3 studies) annually to gather, complete, and submit the appropriate information for each postmarketing status report (approximately two to four studies per report) and the accompanied transmittal Form FDA 2252. Included in these 24 hours is the time necessary to prepare and submit two copies of the annual progress report of postmarketing studies to FDA under § 601.70(d).

Under 21 CFR 610.15(d), FDA has received no submissions since the implementation of the final rule in April 2011. Therefore, FDA is estimating one respondent and one annual request to account for a possible submission to CBER or CDER of a request for an exception or alternative for constituent materials under § 610.15(d).

There were a total of 2,664 amendments to an unapproved application or supplement and resubmissions submitted using Form FDA 356h.

In the **Federal Register** of June 12, 2013 (78 FR 35273), FDA published a 60-day notice requesting public comment on the proposed collection of information. No comments were received.

FDA estimates the burden of this collection of information as follows:

TABLE 1—ESTIMATED ANNUAL REPORTING BURDEN

21 CFR section	Form FDA No.	Number of respondents	Number of responses per respondent	Total annual responses	Average burden per response	Total hours
601.2(a)[2], 610.60 through 610.65[3]	2567/356h	25	1.8	45	860	38,700
601.5(a)	NA	8	1	8	*0.33	2.64
601.6(a)	NA	1	1	1	*0.33	0.33
601.12(a)(5)	NA	791	16.51	13,057	1	13,057
601.12(b)(1)/(b)(3)/(e)[4]	[2]356h	174	4.01	698	80	55,840
601.12(c)(1)/(c)(3)[5]	[2]356h	117	4.60	538	50	26,900
601.12(c)(5)	[2]356h	18	1.61	29	50	1,450
601.12(d)(1)/(d)(3)[6]/(f)(3)[8]	[2]356h	241	3.08	742	24	17,808
601.12(f)(1)[7]	2567	67	2.48	166	40	6,640
601.12(f)(2)[7]	2567	72	1.78	128	20	2,560
601.12(f)(4)/601.45[9]	2567/2253	102	103.71	10,578	10	105,780
601.26(f)	NA	1	1	1	1	1
601.27(b)	NA	4	1	4	24	96
601.27(c)	NA	6	1	6	8	48
601.70(b) and (d)/601.28	2252	56	1.91	107	24	2,568
610.15(d)	NA	1	1	1	1	1
680.1(c)	NA	9	1	9	2	18
680.1(b)(3)(iv)	NA	1	1	1	2	2
Amendments/Resubmissions	356h	207	12.87	2,664	20	53,280
Total						324,752

[1] There are no capital costs or operating and maintenance costs associated with this collection of information.

[2] The reporting requirements under §§ 601.14, 601.27(a), 601.33, 601.34, 601.35, 610.9(a), 610.11(g)(2), 640.17, 640.25(c), 640.56(c), 640.74(b)(2), 660.51(a)(4), and 680.1(b)(2)(iii) are included in the estimate under § 601.2(a).

[3] The reporting requirements under §§ 601.93(b)(3), 640.70(a), 640.74(b)(3) and (4), 640.84(a) and (c), 640.94(a), 660.2(c), 660.28(a), (b), and (c), 660.35(a), (c through g), and (i through m), 660.45, and 660.55(a) and (b) are included under §§ 610.60 through 610.65.

[4] The reporting requirements under §§ 601.12(a)(2) and (b)(4), 600.15(b), 610.9(a), 610.11(g)(2), 610.53(d), 606.110(b), 640.6, 640.17, 640.21(c), 640.22(c), 640.25(c), 640.56(c), 640.64(c), 640.74(a) and (b)(2), 640.120, and 680.1(d) are included in the estimate under § 601.12(b).

[5] The reporting requirements under §§ 601.12(a)(2), 610.9(a), 640.17, 640.25(c), 640.56(c), and 640.74(b)(2) are included in the estimate under § 601.12(c).

[6] The reporting requirement under § 601.12(a)(2) is included in the estimate under § 601.12(d).

[7] The reporting requirement under § 601.14 is included in the estimate under § 601.12(f)(1) and (f)(2).

[8] The reporting requirement under §§ 601.12(a)(4) and 601.14 is included in the estimate under § 601.12(f)(3).

[9] The reporting requirement under § 601.94 is included in the estimate under § 601.45.

* 20 minutes.

TABLE 2—ESTIMATED ANNUAL THIRD PARTY DISCLOSURE BURDEN [1]

21 CFR Section	Number of respondents	Number of disclosures per respondent	Total annual disclosures	Average burden per disclosure	Total hours
601.6(a)	1	20	20	*0.33	6.6

[1] There are no capital costs or operating and maintenance costs associated with this collection of information.
* 20 minutes.

Dated: October 25, 2013.

Leslie Kux,

Assistant Commissioner for Policy.

[FR Doc. 2013–25961 Filed 10–30–13; 8:45 am]

BILLING CODE 4160–01–P

DEPARTMENT OF HEALTH AND HUMAN SERVICES

Food and Drug Administration

[Docket No. FDA–2013–N–0663]

Agency Information Collection Activities; Submission for Office of Management and Budget Review; Comment Request; Investigational New Drug Safety Reporting Requirements for Human Drug and Biological Products and Safety Reporting Requirements for Bioavailability and Bioequivalence Studies in Humans

AGENCY: Food and Drug Administration, HHS.

ACTION: Notice.

SUMMARY: The Food and Drug Administration (FDA) is announcing that a proposed collection of information has been submitted to the Office of Management and Budget (OMB) for review and clearance under the Paperwork Reduction Act of 1995.

DATES: Fax written comments on the collection of information by December 2, 2013.

ADDRESSES: To ensure that comments on the information collection are received, OMB recommends that written comments be faxed to the Office of Information and Regulatory Affairs, OMB, Attn: FDA Desk Officer, FAX: 202–395–7285, or emailed to *oira_submission@omb.eop.gov*. All comments should be identified with the OMB control number 0910–0672. Also include the FDA docket number found in brackets in the heading of this document.

FOR FURTHER INFORMATION CONTACT: FDA PRA Staff, Office of Operations, Food and Drug Administration, 1350 Piccard Dr., PI50–400B, Rockville, MD 20850, *PRAStaff@fda.hhs.gov*.

SUPPLEMENTARY INFORMATION: In compliance with 44 U.S.C. 3507, FDA has submitted the following proposed collection of information to OMB for review and clearance.

Investigational New Drug Safety Reporting Requirements for Human Drug and Biological Products and Safety Reporting Requirements for Bioavailability and Bioequivalence Studies in Humans—(OMB Control Number 0910–0672)—Extension

In the **Federal Register** of September 29, 2010 (75 FR 59935), FDA published a document entitled ''Investigational New Drug Safety Reporting Requirements for Human Drug and Biological Products and Safety Reporting Requirements for Bioavailability and Bioequivalence Studies in Humans.'' The document clarified the Agency's expectations for timely review, evaluation, and submission of relevant and useful safety information and implemented internationally harmonized definitions and reporting standards for IND safety reports. The document also required safety reporting for bioavailability and bioequivalence studies. The document was intended to improve the utility of IND safety reports, expedite FDA's review of critical safety information, better protect human subjects enrolled in clinical trials, and harmonize safety reporting requirements internationally.

The rulemaking included the following information collection under the PRA that was not already included in 21 CFR 312.32 and approved under OMB control number 0910–0014.

Section 312.32(c)(1)(ii) and (c)(1)(iii) requires reporting to FDA, in an IND safety report, of potential serious risks from clinical trials within 15 calendar days for findings from epidemiological studies, pooled analyses of multiple studies, or other clinical studies that suggest a significant risk in humans exposed to the drug.

Section 312.32(c)(1)(iii) specifies the requirements for reporting to FDA in an IND safety report potential serious risks from clinical trials within 15 calendar days for findings from in vitro testing that suggest a significant risk to humans. FDA estimates that approximately 100 sponsors spend a total of approximately 12 hours per report to prepare and submit approximately 600 reports annually.

Section 312.32(c)(1)(iv) requires reporting to FDA in an IND safety report within 15 calendar days of any clinically important increase in the rate of occurrence of serious suspected adverse reactions over that listed in the protocol or investigator brochure. FDA estimates that approximately 10 sponsors spend a total of approximately 12 hours per report to prepare and submit approximately 10 reports annually.

The rulemaking also included new information collection under the PRA by requiring safety reporting for bioavailability and bioequivalence studies (21 CFR 320.31(d)). FDA estimates that approximately 10 sponsors spend a total of approximately 14 hours per report to prepare and submit approximately 200 reports annually.

In the **Federal Register** of June 12, 2013 (78 FR 35283), FDA published a 60-day notice requesting public comment on the proposed collection of information. No comments were received.

FDA estimates the burden of this collection of information as follows:

TABLE 1—ESTIMATED ANNUAL REPORTING BURDEN

21 CFR section	Number of respondents	Number of responses per respondent	Total annual responses	Average burden per response	Total hours
320.31(d) Bioavailability and Bioequivalence Safety Reports	10	20	200	14	2,800
312.32(c)(1)(ii) and (c)(1)(iii)—IND Safety Reports [2]	100	6	600	12	7,200
312.32(c)(1)(iv)—IND Safety Reports [3]	10	1	10	12	120
Total					10,120

[1] There are no capital costs or operating and maintenance costs associated with this collection of information. The estimates are for the additional burdens beyond those already approved for current §§ 312.32 and 312.64.

[2] Includes reports based on findings suggesting a significant risk in humans from epidemiological studies, pooled analysis of multiple studies, other clinical studies, or in vitro testing. Reports from animal testing are not included.

[3] Includes reports of clinically important increases in the rate of occurrence of serious, expected suspected adverse reactions.

Dated: October 25, 2013.

Leslie Kux,

Assistant Commissioner for Policy.

[FR Doc. 2013–25959 Filed 10–30–13; 8:45 am]

BILLING CODE 4160–01–P

DEPARTMENT OF HEALTH AND HUMAN SERVICES

Food and Drug Administration

[Docket No. FDA–2013–N–0825]

Agency Information Collection Activities; Submission for Office of Management and Budget Review; Comment Request; Premarket Approval of Medical Devices

AGENCY: Food and Drug Administration, HHS.

ACTION: Notice.

SUMMARY: The Food and Drug Administration (FDA) is announcing that a proposed collection of information has been submitted to the Office of Management and Budget (OMB) for review and clearance under the Paperwork Reduction Act of 1995.

DATES: Fax written comments on the collection of information by December 2, 2013.

ADDRESSES: To ensure that comments on the information collection are received, OMB recommends that written comments be faxed to the Office of Information and Regulatory Affairs, OMB, Attn: FDA Desk Officer, FAX: 202–395–7285, or emailed to *oira_submission@omb.eop.gov.* All comments should be identified with the OMB control number 0910–0231. Also include the FDA docket number found in brackets in the heading of this document.

FOR FURTHER INFORMATION CONTACT: FDA PRA Staff, Office of Operations, Food and Drug Administration, 1350 Piccard Dr., PI50–400B, Rockville, MD 20850, *PRAStaff@fda.hhs.gov.*

SUPPLEMENTARY INFORMATION: In compliance with 44 U.S.C. 3507, FDA has submitted the following proposed collection of information to OMB for review and clearance.

Premarket Approval of Medical Devices—(OMB Control Number 0910–0231)—Extension

Under section 515 of the Federal Food, Drug, and Cosmetic Act (the FD&C Act) (21 U.S.C. 360e) all devices placed into class III by FDA are subject to premarket approval requirements. Premarket approval (PMA) is the process of scientific and regulatory review to ensure the safety and effectiveness of class III devices. An approved PMA is, in effect, a private license granted to the applicant for marketing a particular medical device. A class III device that fails to meet PMA requirements is considered to be adulterated under section 501(f) of the FD&C Act (21 U.S.C. 351(f)) and cannot be marketed. Premarket approval requirements apply differently to preamendments devices, postamendments devices, and transitional class III devices.

Manufacturers of class III preamendments devices, devices that were in commercial distribution before May 28, 1976, are not required to submit a PMA until 30 months after the issuance of a final classification regulation or until 90 days after the publication of a final regulation requiring the submission of a PMA, whichever period is later. FDA may allow more than 90 days after issuance of a final rule for submission of a PMA.

A postamendments device is one that was first distributed commercially on or after May 28, 1976. Postamendments devices determined by FDA to be substantially equivalent to preamendments class III devices are subject to the same requirements as the preamendments devices. FDA determines substantial equivalence after reviewing an applicant's premarket notification submitted in accordance with section 510(k) of the FD&C Act (21 U.S.C. 360(k)). Postamendments devices determined by FDA to be not substantially equivalent to either preamendments devices or postamendments devices classified into class I or II are ''new'' devices and fall automatically into class III. Before such devices can be marketed, they must have an approved premarket approval application or be must reclassified into class I or class II.

The Food and Drug Modernization Act of 1997 (FDAMA) (Pub. L. 105–115) was enacted on November 21, 1997, to implement revisions to the FD&C Act by streamlining the process of bringing safe and effective drugs, medical devices, and other therapies to the U.S. market. FDAMA added section 515(d)(6) to the FD&C Act, which provided that PMA supplements were required for all device changes that affect safety and effectiveness unless such changes are modifications to manufacturing procedures or method of manufacture. That type of manufacturing change will require a 30-day notice, or where FDA finds such notice inadequate, a 135-day PMA supplement.

The implementing regulations, contained in part 814 (21 CFR part 814), further specify the contents of a PMA for a medical device and the criteria FDA will employ in approving, denying, or withdrawing approval of a PMA and supplements to PMAs. The regulations' purpose is to establish an efficient and thorough procedure for FDA's review of PMAs and supplements to PMAs for class III medical devices. The regulations facilitate the approval of PMAs and supplements to PMAs for devices that have been shown to be reasonably safe and effective and otherwise meet the statutory criteria for approval. The regulations also ensure the denial of PMAs and supplements to PMAs for devices that have not been

shown to be reasonably safe and effective and that do not otherwise meet the statutory criteria for approval.

The industry-wide burden estimate for PMAs is based on an FDA actual average fiscal year (FY) annual rate of receipt of PMA submissions data FY 2010 through 2012 and our expectations of submissions to come in the next few years. The burden data for PMAs is based on data provided by applicants by device type and cost element in an earlier study.

Reporting Burden: The reporting burden can be broken out by certain sections of the PMA regulations and the FD&C Act as follows:

§ 814.15(b)—Research Conducted Outside the United States

Each foreign study should be performed in accordance with the ''Declaration of Helsinki'' or the laws and regulations of the country in which the study was conducted. If the study was conducted in accordance with the laws of the country, the PMA applicant is required to explain to FDA in detail the differences between the laws of the country and the ''Declaration of Helsinki.'' Based on the number of PMAs received that contained studies from overseas, FDA estimates that the burden estimate necessary to meet this requirement is 50 hours.

§ 814.20—Application

Included in this requirement are the conduct of laboratory and clinical trials as well as the analysis, review, and physical preparation of the PMA application. FDA estimates that 40 applicants, including hospital re-manufacturers of single use devices, will be affected by these requirements which are based on the actual average of FDA receipt of new PMA applications in FY 2010 through 2012. FDA's estimate of the hours per response (668) was derived through FDA's experience and consultation with industry and trade associations. In addition, FDA also based its estimate on the results of an earlier study which accounts for the bulk of the hourly burden for this requirement, which is identified by applicants.

§ 814.37(a) Through (c) and (e)—PMA Amendments and Resubmitted PMAs

As part of the review process, FDA often requests the PMA applicant to submit additional information regarding the device necessary for FDA to file the PMA or to complete its review and make a final decision. The PMA applicant may, also on their own initiative, submit additional information to FDA during the review process. These amendments contain information ranging from additional test results, re-analysis of the original data set, to revised device labeling. Almost all PMAs received by the Agency have amendments submitted during the review process. FDA estimates that 20,040 burden hours are necessary to satisfy this requirement.

§ 814.39(a)—PMA Supplements

FDA believes that 39,000 burden hours are needed to complete the requirements for the range of PMA supplements (180-day fee-based, 180-day non-fee based, and real-time supplements).

§ 814.39(d)—Special PMA Supplements—Changes Being Affected

This type of supplements is intended to enhance the safety of the device or the safe use of the device. The number of PMA supplements received that fit this category averaged 80 per year based on the numbers received from FY 2010 through FY 2012. Because of the minimal data required to be included in this type of supplement, FDA estimates that the burden hours necessary to satisfy this requirement are 480 hours.

§ 814.39(f)—30-Day Notice

Under section 515(d) of the FD&C Act, modifications to manufacturing procedures or methods of manufacture that affect the safety and effectiveness of a device subject to an approved PMA do not require submission of a PMA supplement under paragraph (a) of this section and are eligible to be the subject of a 30-day notice. A 30-day notice shall describe in detail the change, summarize the data or information supporting the change, and state that the change has been made in accordance with the requirements of part 820 (21 CFR part 820). The applicant may distribute the device 30 days after the date on which FDA receives the 30-day notice, unless FDA notifies the applicant within 30 days from receipt of the notice, that it is not adequate. FDA estimates the burden to satisfy this requirement is 24,000 hours.

§ 814.82(a)(9)—Postapproval Requirements

Postapproval requirements concerns approved PMAs that were not reclassified and require a periodic report. After approval, all PMAs require a submission of an annual report. A majority of the submitted PMAs require associated postapproval studies, i.e., followup of patients used in clinical trials to support the PMA or additional preclinical information that is labor-intensive to compile and complete; the remaining PMAs require minimal information. Based on experience and consultation with industry, FDA has estimated that preparation of reports and information required by this section requires 31,050 hours.

§ 814.84(b)—Periodic Reports

Postapproval requirements described in § 814.82(a)(7) require submission of an annual report for each approved PMA. FDA estimates that respondents will average about 10 hours in preparing their reports to meet this requirement. This estimate is based on FDA's experience and consultation with industry. Thus, FDA estimates that the periodic reporting burden required by this section will take 6,000 hours.

Expedited or Priority Review—Section 515(d)(5) of the FD&C Act

FDA will provide special review, which can include expedited processing of a PMA application, for certain devices intended to treat or diagnose life threatening or irreversibly debilitating diseases or conditions. To receive special review, the devices must meet one of the following criteria:

- The device represents a breakthrough technology.
- There are no approved alternatives.
- The use of the device offers significant advantages over existing approved alternatives.
- Availability is in the best interest of the patients.

Agreement Meeting—Section 520(g)(7) of the FD&C Act (21 U.S.C. 360j(g)(7))

Applicants planning to submit a PMA may submit a written request to reach agreement with FDA on the key parameters of the investigational plan.

Determination Meeting—Section 513(a)(3)(D) of the FD&C Act (21 U.S.C. 360c(a)(3)(D))

Applicants planning to submit a PMA may submit a written request to FDA for a meeting to determine the type of information (valid scientific evidence) necessary to support the effectiveness of their device.

Panel of Experts—Section 515(c)(3) of the FD&C Act

An original PMA or panel track PMA supplement is taken to an advisory panel of experts unless FDA determines that the information in the application substantially duplicates information which has previously been reviewed by the panel.

Day 100 Meeting—Section 515(d)(3) of the FD&C Act

FDA must, upon the written request of the applicant, meet with that party

within 100 days of receipt of the filed PMA application to discuss the review status of the application. With the concurrence of the applicant, a different schedule may be established. Prior to this meeting, FDA must inform the applicant in writing of any identified deficiencies and what information is required to correct those deficiencies. FDA must also promptly notify the applicant if FDA identifies additional deficiencies or of any additional information required to complete Agency review.

Recordkeeping

§ 814.82(a)(5) and (a)(6)—Maintenance of Records

The recordkeeping burden under this section requires the maintenance of records, used to trace patients and the organization and indexing of records into identifiable files to ensure the device's continued safety and effectiveness. These records are required of all applicants who have an approved PMA.

PMAs have been required since 1976, and there are 556 active PMAs that could be subject to these requirements, based on actual FDA data, and approximately 25 new PMAs are approved every year. The aggregate burden for the estimated 600 PMA holders of approved original PMAs for the next few years is estimated to be 10,200 hours.

The applicant determines which records should be maintained during product development to document and/or substantiate the device's safety and effectiveness. Records required by the current good manufacturing practices for medical devices regulation (21 CFR part 820) may be relevant to a PMA review and may be submitted as part of an application. In individual instances, records may be required as conditions of approval to ensure the device's continuing safety and effectiveness.

In the **Federal Register** of July 23, 2013 (78 FR 44128), FDA published a 60-day notice requesting public comment on the proposed collection of information. No comments were received.

FDA estimates the burden of this collection of information as follows:

TABLE 1—ESTIMATED ANNUAL REPORTING BURDEN [1]

Activity/21 CFR or FD&C act section	Number of respondents	Number of responses per respondent	Total annual responses	Average burden per response	Total hours
Research conducted outside the United States (814.15(b))	25	1	25	2	50
PMA application (814.20)	40	1	40	668	26,720
PMA amendments and resubmitted PMAs (814.37(a)–(c) and (e))	120	1	120	167	20,040
PMA supplements (814.39(a))	650	1	650	60	39,000
Special PMA supplement—changes being affected (814.39(d))	80	1	80	6	480
30-day notice (814.39(f))	1,500	1	1,500	16	24,000
Postapproval requirements (814.82(a)(9))	230	1	230	135	31,050
Periodic reports (814.84(b))	600	1	600	10	6,000
Agreement meeting (520(g)(7))	3	1	3	50	150
Expedited review request (515(d)(5) of the FD&C Act)	5	1	5	10	50
Determination Meeting (513(1)(3)(D) of the FD&C Act)	5	1	5	50	250
Panel meeting (515(c)(3) of the FD&C Act)	10	1	10	30	300
Day 100 meeting (515(d)(3) of the FD&C Act)	10	1	10	10	100
Total					148,190

[1] There are no capital costs or operating and maintenance costs associated with this collection of information.

TABLE 2—ESTIMATED ANNUAL RECORDKEEPING BURDEN [1]

Activity/21 CFR section	Number of recordkeepers	Number of records per recordkeeper	Total annual records	Average burden per recordkeeping	Total hours
Maintenance of records (814.82(a)(5) and (a)(6))	600	1	600	17	10,200

[1] There are no capital costs or operating and maintenance costs associated with this collection of information.

Dated: October 25, 2013.

Leslie Kux,

Assistant Commissioner for Policy.

[FR Doc. 2013–25960 Filed 10–30–13; 8:45 am]

BILLING CODE 4160–01–P

DEPARTMENT OF HEALTH AND HUMAN SERVICES

Health Resources and Services Administration

Discretionary Grant Funds

AGENCY: Health Resources and Services Administration (HRSA), HHS.

ACTION: Notice of Deviation: Non-Competitive Expansion Supplement Funds to the Healthcare Systems Bureau (HSB).

SUMMARY: HRSA will be issuing a non-competitive award to the Children's Hospital of Alabama's Regional Poison Control Center. The 11-month award for $126,144 will be made available in the form of a supplement to grant funds to the organization's current grant, H4BHS15500. Effective October 1, 2013, the Regional Poison Control Center will be Alabama's sole poison control center. The center's responsibility to provide poisoning triage and treatment to half the state will be expanded to the entire state. The grant supplement will allow

HSB to maintain its mandate to provide grant support to the poison center and ensure ready access to poison control center services.

SUPPLEMENTARY INFORMATION:

Intended Recipient of the Award: Children's Hospital of Alabama's Regional Poison Control Center (Grant #H4BHS15500).

Amount of the Non-Competitive Award: $126,144.

CFDA Number: 93.253.

Period of Supplemental Funding: 10/1/2013—8/31/2014.

Authority: SECTION 1273 of the Public Health Service Act, (42 U.S.C. 300d—73), as amended by the Poison Center Support, Enhancement, and Awareness Act of 2008.

Justification: HSB is legislatively mandated to fund poison centers; establish and maintain a single, national toll-free number (800–222–1222) to ensure universal access to poison center services; and implement a nationwide media campaign to educate the public and health care providers about poison prevention, poison center services, and the toll-free number.

To meet the legislative mandate, HSB funds the Poison Center Support and Enhancement Grant Program (H4B) CFDA 93.253. Grantees are funded based on population. The Children's Hospital of Alabama's Regional Poison Control Center (H4BHS11550) was funded at $874,061 for a 5-year project period that is due to end August 31, 2014. The funding was based on providing services to 50 percent of Alabama's population. Beginning October 1, 2013, the grantee will be responsible for providing poison center services to the state's entire population.

HSB proposes this deviation to provide a single supplement of funds in the amount of $126,144 to support the grantee's ability to provide poison center services to the state's entire population with the least amount of disruption.

FOR FURTHER INFORMATION CONTACT: Elisa Gladstone, Director, Division of Poison Control and Healthcare Facilities, Healthcare Systems Bureau, Health Resources and Services Administration, Room 10–105, Rockville, Maryland 20857; (301) 594–4394; *Egladstone@hrsa.gov.*

Dated: October 24, 2013.

Mary K. Wakefield,

Administrator.

[FR Doc. 2013–25890 Filed 10–30–13; 8:45 am]

BILLING CODE 4165–15–P

DEPARTMENT OF HEALTH AND HUMAN SERVICES

Health Resources and Services Administration

National Advisory Council on Nurse Education and Practice; Notice of Meeting

In accordance with section 10(a)(2) of the Federal Advisory Committee Act (Public Law 92–463), notice is hereby given of the following meeting:

Name: National Advisory Council on Nurse Education and Practice (NACNEP).

Dates and Times: November 7, 2013, 9:00 a.m.–5:00 p.m. Eastern Standard Time; November 8, 2013, 9:00 a.m.–5:00 p.m. Eastern Standard Time.

Place: Webinar Format.

Status: This advisory council meeting will be open to the public.

Purpose: The purpose of this meeting is to identify the key issues facing nursing workforce development to respond to the Affordable Care Act and health care system redesign, and to formulate policy recommendations for Congress and the Secretary to ensure the nursing workforce is ready to meet these challenges. The objectives of the meeting are:

(1) To articulate the key challenges facing nursing workforce development in meeting the health care needs of the nation; (2) to develop goals and priorities for Council action to address these challenges; and (3) to develop recommendations on the activities, initiatives, and partnerships that are critical to advancing twenty-first century public health education and practice models needed to promote the health of the public. This meeting will form the basis for NACNEP's mandated Twelfth Annual Report to the Secretary of Health and Human Services and Congress. The meeting will include presentations and discussion focused around the purpose and objectives of this meeting. The logistical challenges of scheduling this meeting hindered an earlier publication of this meeting notice.

Agenda: The Agenda will be available on the NACNEP Web site, noted below, one day prior to the meeting. Agenda items are subject to change as priorities dictate.

For Further Information Contact: Further information regarding NACNEP including the roster of members, Reports to Congress, and minutes from previous meetings is available at the following Web site: *http://www.hrsa.gov/advisorycommittees/bhpradvisory/nacnep/index.html.* Members of the public and interested parties may request to participate in the meeting by contacting our Staff Assistant, Jeanne Brown, to obtain access information. Access is by invitation only and will be granted on a first come, first served basis. Space is limited.

For additional information regarding NACNEP, please contact Jeanne Brown, Staff Assistant, National Advisory Council on Nurse Education and Practice, Parklawn Building, Room 9–61, 5600 Fishers Lane, Rockville, Maryland 20857; email at *reachDN@hrsa.gov;* or telephone at (301) 443–5688.

Dated: October 24, 2013.

Jackie Painter,

Deputy Director, Division of Policy and Information Coordination.

[FR Doc. 2013–25891 Filed 10–30–13; 8:45 am]

BILLING CODE 4165–15–P

DEPARTMENT OF HEALTH AND HUMAN SERVICES

National Institutes of Health

National Human Genome Research Institute; Amended Notice of Meeting

Notice is hereby given of a change in the meeting of the National Human Genome Research Institute Special Emphasis Panel, October 17, 2013, 08:00 a.m. to October 17, 2013, 06:00 p.m., Renaissance Arlington Capital View Hotel, 2800 South Potomac Ave., Studio E, Arlington, VA 22202 which was published in the **Federal Register** on September 11, 2013, 78 FR 55752.

The October 17, 2013 meeting has been changed to December 19, 2013. The meeting is closed to the public.

Dated: October 25, 2013.

David Clary,

Program Analyst, Office of Federal Advisory Committee Policy.

[FR Doc. 2013–25875 Filed 10–30–13; 8:45 am]

BILLING CODE 4140–01–P

DEPARTMENT OF HEALTH AND HUMAN SERVICES

National Institutes of Health

Center for Scientific Review; Amended Notice of Meeting

Notice is hereby given of a change in the meeting of the Kidney, Nutrition, Obesity and Diabetes Study Section, October 10, 2013, 8:00 a.m. to October 11, 2013, 12:30 p.m., Melrose Hotel, 2430 Pennsylvania Ave. NW., Washington, DC 20037 which was published in the **Federal Register** on September 17, 2013, 78 FR 180, Pgs. 57169–57170.

The meeting will be held at National Institutes of Health, 6701 Rockledge Dr., Bethesda, MD 20892. The meeting will start on December 5, 2013 at 09:30 a.m. and end on December 6, 2013 at 1:00 p.m. The meeting is closed to the public.

Dated: October 25, 2013.

Anna Snouffer,

Deputy Director, Office of Federal Advisory Committee Policy.

[FR Doc. 2013–25886 Filed 10–30–13; 8:45 am]

BILLING CODE 4140–01–P

DEPARTMENT OF HEALTH AND HUMAN SERVICES

National Institutes of Health

National Institute of Dental & Craniofacial Research; Amended Notice of Meeting

Notice is hereby given of a change in the meeting of the National Institute of Dental and Craniofacial Research Special Emphasis Panel, October 7, 2013, 10:00 a.m. to October 7, 2013, 4:00 p.m., National Institutes of Health, 6701 Democracy Blvd., 602, Bethesda, MD 20852 which was published in the **Federal Register** on September 16, 2013, 78 FR 56902.

Meeting date has changed from October 7, 2013 to November 12, 2013. The meeting is closed to the public.

Dated: October 25, 2013.

David Clary,

Program Analyst, Office of Federal Advisory Committee Policy.

[FR Doc. 2013–25905 Filed 10–30–13; 8:45 am]

BILLING CODE 4140–01–P

DEPARTMENT OF HEALTH AND HUMAN SERVICES

National Institutes of Health

Center for Scientific Review; Amended Notice of Meeting

Notice is hereby given of a change in the meeting of the Somatosensory and Chemosensory Systems Study Section, October 1, 2013, 8:00 a.m. to October 2, 2013, 5:30 p.m., National Institutes of Health, 6701 Rockledge Drive, Bethesda, MD 20892 which was published in the **Federal Register** on September 3, 2013, 78 FR 170, Pgs. 54259–54261.

The meeting will start on November 4, 2013 at 8:00 a.m. and end on November 4, 2013 at 6:00 p.m. The meeting location remains the same. The meeting is closed to the public.

Dated: October 25, 2013.

Anna Snouffer,

Deputy Director, Office of Federal Advisory Committee Policy.

[FR Doc. 2013–25882 Filed 10–30–13; 8:45 am]

BILLING CODE 4140–01–P

DEPARTMENT OF HEALTH AND HUMAN SERVICES

National Institutes of Health

National Institute of Allergy and Infectious Diseases; Amended Notice of Meeting

Notice is hereby given of a change in the meeting of the National Institute of Allergy and Infectious Diseases Special Emphasis Panel, October 15, 2013, 11:00 a.m. to October 15, 2013, 3:00 p.m., National Institutes of Health, Rockledge 6700, 6700B Rockledge Drive, Bethesda, MD 20817 which was published in the **Federal Register** on September 23, 2013, 78 FR58323.

The meeting notice is amended to change the date and time of the meeting. The meeting is December 2, 2013 from 1:00 p.m. to 5:00 p.m. The meeting is closed to the public.

Dated: October 25, 2013.

David Clary,

Program Analyst, Office of Federal Advisory Committee Policy.

[FR Doc. 2013–25902 Filed 10–30–13; 8:45 am]

BILLING CODE 4140–01–P

DEPARTMENT OF HEALTH AND HUMAN SERVICES

National Institutes of Health

Center for Scientific Review; Amended Notice of Meeting

Notice is hereby given of a change in the meeting of the Center for Scientific Review Special Emphasis Panel, Revision Applications for Basic, Social and Behavioral Research on the Social, Cultural, Biological and Psychological Mechanisms of Stigma, October 20, 2013, 6:00 p.m. to October 21, 2013, 5:00 p.m., National Institutes of Health, 6701 Rockledge Drive, Bethesda, MD 20892 which was published in the **Federal Register** on September 26, 2013, 78 FR 59362.

The meeting will be held on November 14–15, 2013. The meeting time and location remain the same. The meeting is closed to the public.

Dated: October 25, 2013.

Anna Snouffer,

Deputy Director, Office of Federal Advisory Committee Policy.

[FR Doc. 2013–25880 Filed 10–30–13; 8:45 am]

BILLING CODE 4140–01–P

DEPARTMENT OF HEALTH AND HUMAN SERVICES

National Institutes of Health

Center for Scientific Review; Amended Notice of Meeting

Notice is hereby given of a change in the meeting of the Community-Level Health Promotion Study Section, October 21, 2013, 08:00 a.m. to October 22, 2013, 05:00 p.m., Hyatt Regency Bethesda, One Bethesda Metro Center, 7400 Wisconsin Avenue, Bethesda, MD 20814 which was published in the **Federal Register** on September 26, 2013, 78 FR 187 Pgs. 59361–59362.

The meeting will start on November 25, 2013 at 8:00 a.m. and end on November 25, 2013 at 5:00 p.m. The meeting location remains the same. The meeting is closed to the public.

Dated: October 25, 2013.

Anna Snouffer,

Deputy Director, Office of Federal Advisory Committee Policy.

[FR Doc. 2013–25888 Filed 10–30–13; 8:45 am]

BILLING CODE 4140–01–P

DEPARTMENT OF HEALTH AND HUMAN SERVICES

National Institutes of Health

Center for Scientific Review; Amended Notice of Meeting

Notice is hereby given of a change in the meeting of the Center for Scientific Review Special Emphasis Panel, Genetic Epidemiology, October 29, 2013, 09:30 a.m. to October 29, 2013, 10:30 a.m., Wingate by Wyndham, 105 State Street, York, PA 17404 which was published in the **Federal Register** on October 03, 2013, 78 FR 192 Pgs. 61376–61377.

The meeting will start on December 6, 2013 at 9:30 a.m. and end on December 6, 2013 at 11:00 a.m. The meeting location remains the same. The meeting is closed to the public.

Dated: October 25, 2012.

Anna Snouffer,

Deputy Director, Office of Federal Advisory Committee Policy.

[FR Doc. 2013–25887 Filed 10–30–13; 8:45 am]

BILLING CODE 4140–01–P

DEPARTMENT OF HEALTH AND HUMAN SERVICES

National Institutes of Health

Center for Scientific Review; Amended Notice of Meeting

Notice is hereby given of a change in the meeting of the Biology of the Visual System Study Section, October 16, 2013, 08:00 a.m. to October 17, 2013, 05:30 p.m., Hyatt Regency Bethesda, One Bethesda Metro Center, 7400 Wisconsin Avenue, Bethesda, MD 20814 which was published in the **Federal Register** on September 17, 2013, 78 FR 57169.

The meeting will start on December 5, 2013 at 08:00 a.m. and end on December 6, 2013 at 05:00 p.m. The meeting location remains the same. The meeting is closed to the public.

Dated: October 28, 2013.

Anna Snouffer,

Deputy Director, Office of Federal Advisory Committee Policy.

[FR Doc. 2013–25909 Filed 10–30–13; 8:45 am]

BILLING CODE 4140–01–P

DEPARTMENT OF HEALTH AND HUMAN SERVICES

National Institutes of Health

Center for Scientific Review; Amended Notice of Meeting

Notice is hereby given of a change in the meeting of the Center for Scientific Review Special Emphasis Panel, Small Business: Psycho/Neuropathology, Lifespan Development, and Science Education, October 24, 2013, 08:00 a.m. to October 25, 2013, 06:00 p.m., Renaissance Seattle Hotel, 515 Madison Street, Seattle, WA 98104 which was published in the **Federal Register** on October 01, 2013, 78 FR 60297–60299.

The meeting will be held on November 18, 2013 at the Bethesda Marriott Suites, 6711 Democracy Boulevard, Bethesda, MD 20817. The meeting will start at 8:00 a.m. and end at 2:00 p.m. The meeting is closed to the public.

Dated: October 28, 2013.

Anna Snouffer,

Deputy Director, Office of Federal Advisory Committee Policy.

[FR Doc. 2013–25914 Filed 10–30–13; 8:45 am]

BILLING CODE 4140–01–P

DEPARTMENT OF HEALTH AND HUMAN SERVICES

National Institutes of Health

National Institute of Allergy and Infectious Diseases; Notice of Closed Meeting

Pursuant to section 10(d) of the Federal Advisory Committee Act, as amended (5 U.S.C. App.), notice is hereby given of the following meeting.

The meeting will be closed to the public in accordance with the provisions set forth in sections 552b(c)(4) and 552b(c)(6), Title 5 U.S.C., as amended. The grant applications and the discussions could disclose confidential trade secrets or commercial property such as patentable material, and personal information concerning individuals associated with the grant applications, the disclosure of which would constitute a clearly unwarranted invasion of personal privacy.

Name of Committee: National Institute of Allergy and Infectious Diseases Special Emphasis Panel; Delivering Therapeutics to Residual Active HIV Reservoirs.

Date: November 25, 2013.

Time: 8:00 a.m. to 8:00 p.m.

Agenda: To review and evaluate grant applications.

Place: Sheraton Silver Spring Hotel, 8777 Georgia Avenue, Silver Spring, MD 20910.

Contact Person:, Ellen S. Buczko, Ph.D., Scientific Review Officer, Scientific Review Program, Division of Extramural Activities, National Institutes of Health/NIAID, 6700B Rockledge Drive, MSC 7616, Bethesda, MD 20892–7616, 301–451–2676, *ebuczko1@niaid.nih.gov.*

(Catalogue of Federal Domestic Assistance Program Nos. 93.855, Allergy, Immunology, and Transplantation Research; 93.856, Microbiology and Infectious Diseases Research, National Institutes of Health, HHS)

Dated: October 25, 2013.

David Clary,

Program Analyst Office of Federal Advisory Committee Policy.

[FR Doc. 2013–25908 Filed 10–30–13; 8:45 am]

BILLING CODE 4140–01–P

DEPARTMENT OF HEALTH AND HUMAN SERVICES

National Institutes of Health

Center for Scientific Review Amended Notice of Meeting

Notice is hereby given of a change in the meeting of the Molecular Neuropharmacology and Signaling Study Section, October 7, 2013, 8:00 a.m. to October 8, 2013, 12:00 p.m., The Dupont Hotel, 1500 New Hampshire Avenue NW., Washington, DC 20036 which was published in the **Federal Register** on September 10, 2013, 78 FR 175, Pgs. 55268–55270.

The meeting will start on November 19, 2013 at 8:00 a.m. and end on November 20, 2013 at 12:00 p.m. The location remains the same. The meeting is closed to the public.

Dated: October 25, 2013.

Anna Snouffer,

Deputy Director, Office of Federal Advisory Committee Policy.

[FR Doc. 2013–25883 Filed 10–30–13; 8:45 am]

BILLING CODE 4140–01–P

DEPARTMENT OF HEALTH AND HUMAN SERVICES

National Institutes of Health

Center for Scientific Review; Amended Notice of Meeting

Notice is hereby given of a change in the meeting of the Center for Scientific Review Special Emphasis Panel, Fellowships: Biophysical, Physiological, Pharmacological, and Bioengineering Neurosciences, October 10, 2013, 8:00 a.m. to October 11, 2013, 5:00 p.m., Hilton Garden Inn Bethesda, 7301 Waverly Street, Bethesda, MD 20814 which was published in the **Federal Register** on September 11, 2013, 78 FR 55753.

The meeting will be held at the National Institutes of Health, 6701 Rockledge Drive, Bethesda, MD 20892. The meeting will start on November 14, 2013 at 10:00 a.m. and end on December 15, 2013 at 6:00 p.m. The meeting is closed to the public.

Dated: October 28, 2013.

Anna Snouffer,

Deputy Director, Office of Federal Advisory Committee Policy.

[FR Doc. 2013–25911 Filed 10–30–13; 8:45 am]

BILLING CODE 4140–01–P

DEPARTMENT OF HEALTH AND HUMAN SERVICES

National Institutes of Health

National Institute of Allergy and Infectious Diseases; Amended Notice of Meeting

Notice is hereby given of a change in the meeting of the National Institute of Allergy and Infectious Diseases Special Emphasis Panel, October 30, 2013, 9:00 a.m. to October 30, 2013, 6:00 p.m., National Institutes of Health, 6700B Rockledge Drive, Bethesda, MD, 20817 which was published in the **Federal**

Register on October 25, 2013, 78 FR 63996.

This meeting notice is amended to change the date and time of the meeting. The meeting is November 26, 2013 from 9:00 a.m. to 5:00 p.m. The meeting is closed to the public.

Dated: October 25, 2013.

David Clary,

Program Analyst, Office of Federal Advisory Committee Policy.

[FR Doc. 2013–25903 Filed 10–30–13; 8:45 am]

BILLING CODE 4140–01–P

DEPARTMENT OF HEALTH AND HUMAN SERVICES

National Institutes of Health

Center for Scientific Review; Amended Notice of Meeting

Notice is hereby given of a change in the meeting of the Basic Mechanisms of Cancer Therapeutics Study Section, October 7, 2013, 8:00 a.m. to October 8, 2013, 5:00 p.m., Torrance Marriott South Bay, Torrance, CA 90503 which was published in the **Federal Register** on September 16, 2013, 78 FR 179, Pgs. 56904–56905.

The meeting will be held at Ritz Carlton, 1150 22nd St. NW., Washington, DC 20037. The meeting will start on December 3, 2013 at 8:00 a.m. and end on December 4, 2013 at 12:00 p.m. The meeting is closed to the public.

Dated: October 25, 2013.

Anna Snouffer,

Deputy Director, Office of Federal Advisory Committee Policy.

[FR Doc. 2013–25900 Filed 10–30–13; 8:45 am]

BILLING CODE 4140–01–P

DEPARTMENT OF HEALTH AND HUMAN SERVICES

National Institutes of Health

Center for Scientific Review; Amended Notice of Meeting

Notice is hereby given of a change in the meeting of the Center for Scientific Review Special Emphasis Panel, Molecular Neuroscience of Channels and Receptors, October 18, 2013, 1:00 p.m. to October 18, 2013, 3:00 p.m., National Institutes of Health, 6701 Rockledge Drive, Bethesda, MD 0892 which was published in the **Federal Register** on September 24, 2013, 78 FR 58548.

The meeting will be held on November 21, 2013. The meeting time and location remain the same. The meeting is closed to the public.

Dated: October 28, 2013.

Anna Snouffer,

Deputy Director, Office of Federal Advisory Committee Policy.

[FR Doc. 2013–25894 Filed 10–30–13; 8:45 am]

BILLING CODE 4140–01–P

DEPARTMENT OF HEALTH AND HUMAN SERVICES

National Institutes of Health

National Institute on Minority Health and Health Disparities; Notice of Closed Meeting

Pursuant to section 10(d) of the Federal Advisory Committee Act, as amended (5 U.S.C. App.), notice is hereby given of the following meeting.

The meeting will be closed to the public in accordance with the provisions set forth in sections 552b(c)(4) and 552b(c)(6), Title 5 U.S.C., as amended. The grant applications and the discussions could disclose confidential trade secrets or commercial property such as patentable materials, and personal information concerning individuals associated with the grant applications, the disclosure of which would constitute a clearly unwarranted invasion of personal privacy.

Name of Committee: National Institute on Minority Health and Health Disparities Special Emphasis Panel; NIMHD Research Center in Minority Institution Program (G12).

Date: November 22, 2013.

Time: 12:00 p.m. to 5:00 p.m.

Agenda: To review and evaluate grant applications.

Place: National Institute on Minority Health and Health Disparities, 6707 Democracy Blvd., Suite 800, Bethesda, MD 20892, (Telephone Conference Call).

Contact Person: Maryline Laude-Sharp, Ph.D., Scientific Review Officer, National Institute on Minority Health, and Health Disparities, National Institutes of Health, 6707 Democracy Blvd., Suite 800, Bethesda, MD 20892, (301) 451–9536, *mlaudesharp@mail.nih.gov*.

Dated: October 25, 2013.

David Clary,

Program Analyst, Office of Federal Advisory Committee Policy.

[FR Doc. 2013–25879 Filed 10–30–13; 8:45 am]

BILLING CODE 4140–01–P

DEPARTMENT OF HEALTH AND HUMAN SERVICES

National Institutes of Health

National Institute of Dental & Craniofacial Research; Amended Notice of Meeting

Notice is hereby given of a change in the meeting of the NIDCR Special Grants Review Committee, October 17, 2013, 8:00 a.m. to October 18, 2013, 12:00 p.m., NIH Building 60 (The Cloister), 1 Cloister Court (Center Drive and Convent Drive), Bethesda, MD 20814146 which was published in the **Federal Register** on August 19, 2013, 78 FR 50426.

Meeting date has changed from October 17–18, 2013 to December 9, 2013 from 8:00 a.m. to 6:00 p.m. The meeting is closed to the public.

Dated: October 25, 2013.

David Clary,

Program Analyst, Office of Federal Advisory Committee Policy.

[FR Doc. 2013–25904 Filed 10–30–13; 8:45 am]

BILLING CODE 4140–01–P

DEPARTMENT OF HEALTH AND HUMAN SERVICES

National Institutes of Health

Center for Scientific Review; Amended Notice of Meeting

Notice is hereby given of a change in the meeting of the Center for Scientific Review Special Emphasis Panel, Community-Level Health Promotion: Prevention and Intervention, October 22, 2013, 1:00 p.m. to October 22, 2013, 5:00 p.m., Hyatt Regency Bethesda, One Bethesda Metro Center, 7400 Wisconsin Avenue, Bethesda, MD 20814 which was published in the **Federal Register** on October 1, 2013, 78 FR 190, Pgs. 60294–60296.

The meeting will start on November 25, 2013 at 4:00 p.m. and end on November 25, 2013 at 6:30 p.m. The meeting location remains the same. The meeting is closed to the public.

Dated: October 25, 2013.

Anna Snouffer,

Deputy Director, Office of Federal Advisory Committee Policy.

[FR Doc. 2013–25889 Filed 10–30–13; 8:45 am]

BILLING CODE 4140–01–P

DEPARTMENT OF HEALTH AND HUMAN SERVICES

National Institutes of Health

Center for Scientific Review; Amended Notice of Meeting

Notice is hereby given of a change in the meeting of the Virology-B Study Section, October 17, 2013, 8:30 a.m. to October 18, 2013, 5:00 p.m., Sheraton Gunter Hotel, 205 East Houston St., San Antonio, TX 78205 which was published in the **Federal Register** on September 20, 2013, 78 FR 183, Pgs. 57866–57867.

The meeting will start on November 21, 2013 at 8:30 a.m. and end on November 22, 2013 at 5:00 p.m.

The meeting location remains the same. The meeting is closed to the public.

Dated: October 25, 2013.

Anna Snouffer,

Deputy Director, Office of Federal Advisory Committee Policy.

[FR Doc. 2013–25895 Filed 10–30–13; 8:45 am]

BILLING CODE 4140–01–P

DEPARTMENT OF HEALTH AND HUMAN SERVICES

National Institutes of Health

Center for Scientific Review; Amended Notice of Meeting

Notice is hereby given of a change in the meeting of the Cardiovascular and Sleep Epidemiology Study Section, October 2, 2013, 8:00 a.m. to October 2, 2013, 6:00 p.m., Melrose Hotel, 2430 Pennsylvania Avenue NW., Washington, DC 20037 which was published in the **Federal Register** on September 3, 2013, 78 FR 170, Pgs. 54259–54261.

The meeting will be held at National Institutes of Health, 6701 Rockledge Dr., Bethesda, MD 20892. The meeting will start on December 16, 2013 at 9:30 a.m. and end on December 16, 2013 at 6:00 p.m. The meeting is closed to the public.

Dated: October 25, 2013.

Anna Snouffer,

Deputy Director, Office of Federal Advisory Committee Policy.

[FR Doc. 2013–25897 Filed 10–30–13; 8:45 am]

BILLING CODE 4140–01–P

DEPARTMENT OF HEALTH AND HUMAN SERVICES

National Institutes of Health

Center for Scientific Review; Amended Notice of Meeting

Notice is hereby given of a change in the meeting of the Cellular Signaling and Regulatory Systems Study Section, October 21, 2013, 8:00 a.m. to October 21, 2013, 5:00 p.m., Hotel Nikko San Francisco, 222 Mason Street, San Francisco, CA, 94102 which was published in the **Federal Register** on September 26, 2013, 78 FR 59361.

The meeting will be held at the Renaissance Washington DC, Dupont Circle Hotel, 1143 New Hampshire Avenue NW., Washington, DC 20037 on December 4, 2013, starting at 8:00 a.m. and ending at 6:00 p.m. The meeting is closed to the public.

Dated: October 28, 2013.

Anna Snouffer,

Deputy Director, Office of Federal Advisory Committee Policy.

[FR Doc. 2013–25917 Filed 10–30–13; 8:45 am]

BILLING CODE 4140–01–P

DEPARTMENT OF HEALTH AND HUMAN SERVICES

National Institutes of Health

National Institute of Allergy and Infectious Diseases; Amended Notice of Meeting

Notice is hereby given of a change in the meeting of the Allergy, Immunology, and Transplantation Research Committee, October 16, 2013, 10:00 a.m. to October 16, 2013, 5:30 p.m., National Institutes of Health, Rockledge 6700, 6700B Rockledge Drive, Bethesda, MD 20817 which was published in the **Federal Register** on September 23, 2013, 78 FR 58322.

The date has been changed from October 16, 2013 to November 25, 2013. The meeting is closed to the public.

Dated: October 25, 2013.

David Clary,

Program Analyst, Office of Federal Advisory Committee Policy.

[FR Doc. 2013–25876 Filed 10–30–13; 8:45 am]

BILLING CODE 4140–01–P

DEPARTMENT OF HEALTH AND HUMAN SERVICES

National Institutes of Health

Center for Scientific Review; Amended Notice of Meeting

Notice is hereby given of a change in the meeting of the Intercellular Interactions Study Section, October 3, 2013, 08:00 a.m. to October 4, 2013, 05:00 p.m., Hilton Garden Inn, 7301 Waverly Street, Bethesda, MD 21045 which was published in the **Federal Register** on September 10, 2013, 78 FR 55267.

The meeting will be held on December 5, 2013 from 08:00 a.m. to 06:00 p.m. The meeting location remains the same. The meeting is closed to the public.

Dated: October 28, 2013.

Anna Snouffer,

Deputy Director, Office of Federal Advisory Committee Policy.

[FR Doc. 2013–25916 Filed 10–30–13; 8:45 am]

BILLING CODE 4140–01–P

DEPARTMENT OF HEALTH AND HUMAN SERVICES

National Institutes of Health

Center for Scientific Review; Amended Notice of Meeting

Notice is hereby given of a change in the meeting of the Brain Injury and Neurovascular Pathologies Study Section, October 10, 2013, 08:00 a.m. to October 11, 2013, 05:00 p.m., Hotel Nikko San Francisco, 222 Mason Street, San Francisco, CA 94102 which was published in the **Federal Register** on September 12, 2013, 78 FR 177 Pg. 56239.

The meeting will be held at Embassy Suites Chevy Chase, 4300 Military Rd. NW., Washington, DC 20015. The meeting will start on November 25, 2013 at 8:30 a.m. and end on November 26, 2013 at 5:00 p.m. The meeting is closed to the public.

Dated: October 25, 2013.

Anna Snouffer,

Deputy Director, Office of Federal Advisory Committee Policy.

[FR Doc. 2013–25874 Filed 10–30–13; 8:45 am]

BILLING CODE 4140–01–P

DEPARTMENT OF HEALTH AND HUMAN SERVICES

National Institutes of Health

National Institute on Alcohol Abuse and Alcoholism; Notice of Closed Meeting

Pursuant to section 10(d) of the Federal Advisory Committee Act, as amended (5 U.S.C. App.), notice is hereby given of the following meeting.

The meeting will be closed to the public in accordance with the provisions set forth in sections 552b(c)(4) and 552b(c)(6), Title 5 U.S.C., as amended. The grant applications and the discussions could disclose confidential trade secrets or commercial property such as patentable material, and personal information concerning individuals associated with the grant applications, the disclosure of which would constitute a clearly unwarranted invasion of personal privacy.

Name of Committee: National Institute on Alcohol Abuse and Alcoholism Special Emphasis Panel; NIAAA Member Conflict Applications—Basic Sciences.

Date: November 26, 2013.

Time: 11:00 a.m. to 1:00 p.m.

Agenda: To review and evaluate grant applications.

Place: National Institute of Alcohol Abuse and Alcoholism, 5635 Fishers Lane (Teleconference), Rockville, MD 20855.

Contact Person: Ranga Srinivas, Ph.D., Chief, Extramural Project Review Branch EPRB, NIAAA, National Institutes of Health, 5365 Fishers Lane, Room 2085, Rockville, MD 20852, (301) 451–2067, *srinivar@mail.nih.gov.*

(Catalogue of Federal Domestic Assistance Program No. 93.273, Alcohol Research Programs; National Institutes of Health, HHS).

Dated: October 25, 2013.

Carolyn A. Baum,

Program Analyst, Office of Federal Advisory Committee Policy.

[FR Doc. 2013–25802 Filed 10–30–13; 8:45 am]

BILLING CODE 4140–01–P

DEPARTMENT OF HEALTH AND HUMAN SERVICES

National Institutes of Health

Center for Scientific Review; Amended Notice of Meeting

Notice is hereby given of a change in the meeting of the Hepatobiliary Pathophysiology Study Section, October 15, 2013, 8:00 a.m. to October 16, 2013, 1:00 p.m., Residence Inn Bethesda, 7335 Wisconsin Avenue, Bethesda, MD 20814 which was published in the **Federal Register** on September 16, 2013, 78 FR 56905.

The meeting will be held at the National Institutes of Health, 6701 Rockledge Drive, Bethesda, MD 20892. The meeting will start on December 5, 2013 at 8:00 a.m. and end on December 9, 2013 at 5:00 p.m. The meeting is closed to the public.

Dated: October 25, 2013.

Anna Snouffer,

Deputy Director, Office of Federal Advisory Committee Policy.

[FR Doc. 2013–25884 Filed 10–30–13; 8:45 am]

BILLING CODE 4140–01–P

DEPARTMENT OF HEALTH AND HUMAN SERVICES

National Institutes of Health

Center for Scientific Review; Amended Notice of Meeting

Notice is hereby given of a change in the meeting of the Diseases and Pathophysiology of the Visual System Study Section, October 24, 2013, 08:00 a.m. to October 25, 2013, 05:00 p.m., Renaissance M Street Hotel, 1143 New Hampshire Avenue NW., Washington, DC 20037 which was published in the **Federal Register** on October 01, 2013, 78 FR 60298.

The meeting will be held on November 25–26, 2013 at the Embassy Suites Chevy Chase Pavilion, 4300 Military Road NW., Washington, DC 20015. The meeting time remains the same. The meeting is closed to the public.

Dated: October 28, 2013.

Anna Snouffer,

Deputy Director, Office of Federal Advisory Committee Policy.

[FR Doc. 2013–25910 Filed 10–30–13; 8:45 am]

BILLING CODE 4140–01–P

DEPARTMENT OF HEALTH AND HUMAN SERVICES

National Institutes of Health

Center for Scientific Review; Amended Notice of Meeting

Notice is hereby given of a change in the meeting of the Macromolecular Structure and Function E Study Section, October 1, 2013, 08:00 a.m. to October 2, 2013, 05:00 p.m., St. Gregory Hotel, 2033 M Street NW., Washington, DC 20036 which was published in the **Federal Register** on September 05, 2013, 78 FR 54665.

The meeting will be held at the National Institutes of Health, 6701 Rockledge Drive, Bethesda, MD 20892. The meeting will start on October 23, 2013 at 09:00 a.m. and end on November 5, 2013 at 05:00 p.m. The meeting is closed to the public.

Dated: October 25, 2013.

Anna Snouffer,

Deputy Director, Office of Federal Advisory Committee Policy.

[FR Doc. 2013–25881 Filed 10–30–13; 8:45 am]

BILLING CODE 4140–01–P

DEPARTMENT OF HEALTH AND HUMAN SERVICES

National Institutes of Health

National Institute of Diabetes and Digestive and Kidney Diseases; Amended Notice of Meeting

Notice is hereby given of a change in the meeting of the National Institute of Diabetes and Digestive and Kidney Diseases Special Emphasis Panel, October 1, 2013, 8:00 a.m. to October 2, 2013, 5:00 p.m., the Melrose Hotel, 2430 Pennsylvania Avenue, Washington, DC 20037 which was published in the **Federal Register** on September 9, 2013, 78 FR 55088.

This meeting will be held on November 10, 2013 from 1:00 p.m. until 4:00 p.m. and November 11, 2013 from 9:00 a.m. until 3:00 p.m. This meeting is now a Telephone Conference Call. The meeting is closed to the public.

Dated: October 25, 2013.

David Clary,

Program Analyst, Office of Federal Advisory Committee Policy.

[FR Doc. 2013–25877 Filed 10–30–13; 8:45 am]

BILLING CODE 4140–01–P

DEPARTMENT OF HEALTH AND HUMAN SERVICES

National Institutes of Health

Center for Scientific Review; Amended Notice of Meeting

Notice is hereby given of a change in the meeting of the Macromolecular Structure and Function C Study Section, October 3, 2013, 8:00 a.m. to October 4, 2013, 10:00 a.m., Washington Plaza Hotel, 10 Thomas Circle NW., Washington, DC 20005 which was published in the **Federal Register** on September 9, 2013, 78 FR 174, Pgs. 55086–55087.

The meeting will be held at National Institutes of Health, 6701 Rockledge Dr., Bethesda, MD 20892. The meeting will start on November 18, 2013 at 10:00 a.m. and end on November 20, 2013 at

6:00 p.m. The meeting is closed to the public.

Dated: October 25, 2013.

Anna Snouffer,

Deputy Director, Office of Federal Advisory Committee Policy.

[FR Doc. 2013–25899 Filed 10–30–13; 8:45 am]

BILLING CODE 4140–01–P

DEPARTMENT OF HEALTH AND HUMAN SERVICES

National Institutes of Health

National Institute of Dental & Craniofacial Research; Amended Notice of Meeting

Notice is hereby given of a change in the meeting of the National Institute of Dental and Craniofacial Research Special Emphasis Panel, October 21, 2013, 9:00 a.m. to October 21, 2013, 5:00 p.m., National Institutes of Health, Two Democracy Plaza, 6707 Democracy Boulevard, Bethesda, MD 20892 which was published in the **Federal Register** on September 27, 2013, 78 FR 59708.

Meeting date has changed from October 21, 2013 to November 6, 2013. The meeting is closed to the public.

Dated: October 25, 2013.

David Clary,

Program Analyst, Office of Federal Advisory Committee Policy.

[FR Doc. 2013–25906 Filed 10–30–13; 8:45 am]

BILLING CODE 4140–01–P

DEPARTMENT OF HEALTH AND HUMAN SERVICES

National Institutes of Health

Center for Scientific Review; Amended Notice of Meeting

Notice is hereby given of a change in the meeting of the Sensorimotor Integration Study Section, October 01, 2013, 10:00 a.m. to October 02, 2013, 06:00 p.m., National Institutes of Health, 6701 Rockledge Drive, Bethesda, MD 20892 which was published in the **Federal Register** on September 05, 2013, 78 FR 172, Pgs. 54664–54665.

The meeting will start on November 25, 2013 at 10:00 a.m. and end on November 26, 2013 at 6:00 p.m.

The meeting location remains the same. The meeting is closed to the public.

Dated: October 25, 2013.

Anna Snouffer,

Deputy Director, Office of Federal Advisory Committee Policy.

[FR Doc. 2013–25898 Filed 10–30–13; 8:45 am]

BILLING CODE 4140–01–P

DEPARTMENT OF HEALTH AND HUMAN SERVICES

National Institutes of Health

National Institute of Allergy and Infectious Diseases; Amended Notice of Meeting

Notice is hereby given of a change in the meeting of the National Institute of Allergy and Infectious Diseases Special Emphasis Panel, October 31, 2013, 11:00 a.m. to November 1, 2013, 3:00 p.m., National Institutes of Health, 6700B Rockledge Drive, Bethesda, MD 20817 which was published in the **Federal Register** on October 25, 2013, 78 FR 63996.

The meeting notice is amended to change the date of the meeting. The meeting is November 15–18, 2013. The meeting is closed to the public.

Dated: October 25, 2013.

David Clary,

Program Analyst, Office of Federal Advisory Committee Policy.

[FR Doc. 2013–25907 Filed 10–30–13; 8:45 am]

BILLING CODE 4140–01–P

DEPARTMENT OF HEALTH AND HUMAN SERVICES

National Institutes of Health

Center for Scientific Review; Amended Notice of Meeting

Notice is hereby given of a change in the meeting of the Center for Scientific Review Special Emphasis Panel, Member Conflict: Pain, October 29, 2013, 08:00 a.m. to October 30, 2013, 06:00 p.m., National Institutes of Health, 6701 Rockledge Drive, Bethesda, MD 20892 which was published in the **Federal Register** on October 03, 2013, 78 FR 61376.

The meeting will be held on December 19, 2013. The meeting location and time remain the same. The meeting is closed to the public.

Dated: October 28, 2013.

Anna Snouffer,

Deputy Director, Office of Federal Advisory Committee Policy.

[FR Doc. 2013–25912 Filed 10–30–13; 8:45 am]

BILLING CODE 4140–01–P

DEPARTMENT OF HEALTH AND HUMAN SERVICES

National Institutes of Health

Center for Scientific Review; Amended Notice of Meeting

Notice is hereby given of a change in the meeting of the Gastrointestinal Mucosal Pathobiology Study Section, October 17, 2013, 08:00 a.m. to October 17, 2013, 06:00 p.m., Embassy Suites at the Chevy Chase Pavilion, Embassy Suites at the Chevy Chase Pavilion, 4300 Military Rd. NW., Washington, DC 20015 which was published in the **Federal Register** on September 20, 2013, 78 FR 183, Pgs. 57866–57867.

The meeting will be held at Hyatt Regency Bethesda, 7400 Wisconsin Ave., Bethesda, MD 20814. The meeting will start on December 5, 2013 at 8:00 a.m. and end on December 5, 2013 at 6:00 p.m. The meeting is closed to the public.

Dated: October 25, 2013.

Anna Snouffer,

Deputy Director, Office of Federal Advisory Committee Policy.

[FR Doc. 2013–25896 Filed 10–30–13; 8:45 am]

BILLING CODE 4140–01–P

DEPARTMENT OF HEALTH AND HUMAN SERVICES

National Institutes of Health

Center for Scientific Review; Amended Notice of Meeting

Notice is hereby given of a change in the meeting of the Development-1 Study Section, October 8, 2013, 8:00 a.m. to October 8, 2013, 5:00 p.m., Torrance Marriott South Bay, 3635 Fashion Way, Torrance, CA 90503 which was published in the **Federal Register** on September 10, 2013, 78 FR 55267.

The meeting will be held on November 18, 2013 from 8:00 a.m. to 6:00 p.m. The meeting location remains the same. The meeting is closed to the public.

Dated: October 28, 2013.

Anna Snouffer,

Deputy Director, Office of Federal Advisory Committee Policy.

[FR Doc. 2013–25915 Filed 10–30–13; 8:45 am]

BILLING CODE 4140–01–P

DEPARTMENT OF HEALTH AND HUMAN SERVICES

National Institutes of Health

Center for Scientific Review; Amended Notice of Meeting

Notice is hereby given of a change in the meeting of the Behavioral Genetics and Epidemiology Study Section, October 8, 2013, 8:00 a.m. to October 8, 2013, 6:00 p.m., Melrose Hotel, 2430 Pennsylvania Ave. NW., Washington, DC 20037 which was published in the **Federal Register** on September 11, 2013, 78 FR 55753.

The meeting will be held at the National Institutes of Health, 6701 Rockledge Drive, Bethesda, MD 20892 on December 5, 2013, starting at 8:00 a.m. and ending at 6:00 p.m. The meeting is closed to the public.

Dated: October 25, 2013.

Anna Snouffer,

Deputy Director, Office of Federal Advisory Committee Policy.

[FR Doc. 2013–25885 Filed 10–30–13; 8:45 am]

BILLING CODE 4140–01–P

DEPARTMENT OF HEALTH AND HUMAN SERVICES

National Institutes of Health

Center for Scientific Review; Amended Notice of Meeting

Notice is hereby given of a change in the meeting of the Center for Scientific Review Special Emphasis Panel, Skeletal Biology and Regeneration Overflow, October 9, 2013, 06:30 a.m. to October 9, 2013, 07:30 a.m., Admiral Fell Inn, 888 South Broadway, Baltimore, MD, 21231 which was published in the **Federal Register** on October 3, 2013, 78 FR 61376.

The meeting will be held on November 19, 2013 6:30 p.m. to 7:30 p.m. The meeting location remains the same. The meeting is closed to the public.

Dated: October 28, 2013.

Anna Snouffer,

Program Analyst, Office of Federal Advisory Committee Policy.

[FR Doc. 2013–25913 Filed 10–30–13; 8:45 am]

BILLING CODE 4140–01–P

DEPARTMENT OF HEALTH AND HUMAN SERVICES

National Institutes of Health

Center for Scientific Review; Amended Notice of Meeting

Notice is hereby given of a change in the meeting of the Pathophysiological Basis of Mental Disorders and Addictions Study Section, October 10, 2013, 8:00 a.m. to October 11, 2013, 5:00 p.m., Embassy Suites Washington, DC—Convention Center, 900 10th St. NW., Washington, DC 20001 which was published in the **Federal Register** on September 11, 2013, 78 FR 55753.

The meeting will be held on November 18–19, 2013 at the Melrose Hotel, 2430 Pennsylvania Avenue NW., Washington, DC 20037. The meeting time remains the same. The meeting is closed to the public.

Dated: October 25, 2013.

Anna Snouffer,

Deputy Director, Office of Federal Advisory Committee Policy.

[FR Doc. 2013–25901 Filed 10–30–13; 8:45 am]

BILLING CODE 4140–01–P

DEPARTMENT OF HOMELAND SECURITY

Coast Guard

[USCG–2013–0519]

Collection of Information Under Review by Office of Management and Budget

AGENCY: Coast Guard, DHS.

ACTION: Thirty-day notice requesting comments.

SUMMARY: In compliance with the Paperwork Reduction Act of 1995 the U.S. Coast Guard is forwarding Information Collection Requests (ICRs), abstracted below, to the Office of Management and Budget (OMB), Office of Information and Regulatory Affairs (OIRA), requesting approval of revisions to the following collections of information: 1625–0074, Direct User Fees for Inspection or Examination of U.S. and Foreign Commercial Vessels; 1625–0084, Audit Reports under the International Safety Management Code and 1625–0093, Facilities Transferring Oil or Hazardous Materials in Bulk—Letter of Intent and Operations Manual. Our ICRs describe the information we seek to collect from the public. Review and comments by OIRA ensure we only impose paperwork burdens commensurate with our performance of duties.

DATES: Comments must reach the Coast Guard and OIRA on or before December 2, 2013.

ADDRESSES: You may submit comments identified by Coast Guard docket number [USCG–2013–0519] to the Docket Management Facility (DMF) at the U.S. Department of Transportation (DOT) and/or to OIRA. To avoid duplicate submissions, please use only one of the following means:

(1) *Online:* (a) To Coast Guard docket at *http://www.regulations.gov.* (b) To OIRA by email via: *OIRA-submission@omb.eop.gov.*

(2) *Mail:* (a) DMF (M–30), DOT, West Building Ground Floor, Room W12–140, 1200 New Jersey Avenue SE., Washington, DC 20590–0001. (b) To OIRA, 725 17th Street NW., Washington, DC 20503, attention Desk Officer for the Coast Guard.

(3) *Hand Delivery:* To DMF address above, between 9 a.m. and 5 p.m., Monday through Friday, except Federal holidays. The telephone number is 202–366–9329.

(4) *Fax:* (a) To DMF, 202–493–2251. (b) To OIRA at 202–395–6566. To ensure your comments are received in a timely manner, mark the fax, attention Desk Officer for the Coast Guard.

The DMF maintains the public docket for this Notice. Comments and material received from the public, as well as documents mentioned in this Notice as being available in the docket, will become part of the docket and will be available for inspection or copying at room W12–140 on the West Building Ground Floor, 1200 New Jersey Avenue SE., Washington, DC, between 9 a.m. and 5 p.m., Monday through Friday, except Federal holidays. You may also find the docket on the Internet at *http://www.regulations.gov.*

Copies of the ICRs are available through the docket on the Internet at *http://www.regulations.gov.* Additionally, copies are available from: Commandant (CG–612), Attn: Paperwork Reduction Act Manager, US Coast Guard, 2703 Martin Luther King Jr Ave. SE., STOP 7710, Washington, DC 20593–7710.

FOR FURTHER INFORMATION CONTACT: Anthony Smith, Office of Information Management, telephone 202–475–3532 or fax 202–372–8405, for questions on these documents. Contact Ms. Barbara Hairston, Program Manager, Docket Operations, 202–366–9826, for questions on the docket.

SUPPLEMENTARY INFORMATION:

Public Participation and Request for Comments

This Notice relies on the authority of the Paperwork Reduction Act of 1995;

44 U.S.C. Chapter 35, as amended. An ICR is an application to OIRA seeking the approval, extension, or renewal of a Coast Guard collection of information (Collection). The ICR contains information describing the Collection's purpose, the Collection's likely burden on the affected public, an explanation of the necessity of the Collection, and other important information describing the Collections. There is one ICR for each Collection.

The Coast Guard invites comments on whether these ICRs should be granted based on the Collections being necessary for the proper performance of Departmental functions. In particular, the Coast Guard would appreciate comments addressing: (1) The practical utility of the Collections; (2) the accuracy of the estimated burden of the Collections; (3) ways to enhance the quality, utility, and clarity of information subject to the Collections; and (4) ways to minimize the burden of the Collections on respondents, including the use of automated collection techniques or other forms of information technology. These comments will help OIRA determine whether to approve the ICRs referred to in this Notice.

We encourage you to respond to this request by submitting comments and related materials. Comments to Coast Guard or OIRA must contain the OMB Control Number of the ICR. They must also contain the docket number of this request, [USCG 2013–0519], and must be received by December 2, 2013. We will post all comments received, without change, to *http://www.regulations.gov.* They will include any personal information you provide. We have an agreement with DOT to use their DMF. Please see the ''Privacy Act'' paragraph below.

Submitting Comments

If you submit a comment, please include the docket number [USCG–2013–0519]; indicate the specific section of the document to which each comment applies, providing a reason for each comment. You may submit your comments and material online (via *http://www.regulations.gov*), by fax, mail, or hand delivery, but please use only one of these means. If you submit a comment online via *www.regulations.gov,* it will be considered received by the Coast Guard when you successfully transmit the comment. If you fax, hand deliver, or mail your comment, it will be considered as having been received by the Coast Guard when it is received at the DMF. We recommend you include your name, mailing address, an email address, or other contact information in the body of your document so that we can contact you if we have questions regarding your submission.

You may submit comments and material by electronic means, mail, fax, or delivery to the DMF at the address under **ADDRESSES**, but please submit them by only one means. To submit your comment online, go to *http://www.regulations.gov,* and type ''USCG–2013–0519'' in the ''Keyword'' box. If you submit your comments by mail or hand delivery, submit them in an unbound format, no larger than 8½ by 11 inches, suitable for copying and electronic filing. If you submit comments by mail and would like to know that they reached the Facility, please enclose a stamped, self-addressed postcard or envelope. We will consider all comments and material received during the comment period and will address them accordingly.

Viewing Comments and Documents

To view comments, as well as documents mentioned in this Notice as being available in the docket, go to *http://www.regulations.gov,* click on the ''read comments'' box, which will then become highlighted in blue. In the ''Keyword'' box insert ''USCG–2013–0519'' and click ''Search.'' Click the ''Open Docket Folder'' in the ''Actions'' column. You may also visit the DMF in Room W12–140 on the ground floor of the DOT West Building, 1200 New Jersey Avenue SE., Washington, DC 20590, between 9 a.m. and 5 p.m., Monday through Friday, except Federal holidays.

OIRA posts its decisions on ICRs online at *http://www.reginfo.gov/public/do/PRAMain* after the comment period for each ICR. An OMB Notice of Action on each ICR will become available via a hyperlink in the OMB Control Numbers: 1625–0074, 1625–0084 and 1625–0093.

Privacy Act

Anyone can search the electronic form of comments received in dockets by the name of the individual submitting the comment (or signing the comment, if submitted on behalf of an association, business, labor union, etc.). You may review a Privacy Act statement regarding Coast Guard public dockets in the January 17, 2008, issue of the **Federal Register** (73 FR 3316).

Previous Request for Comments

This request provides a 30-day comment period required by OIRA. The Coast Guard published the 60-day notice (78 FR 42535, July 16, 2013) required by 44 U.S.C. 3506(c)(2). That Notice elicited no comments.

Information Collection Requests

1. *Title:* Direct User Fees for Inspection or Examination of U.S. and Foreign Commercial Vessels.

OMB Control Number: 1625–0074.

Type of Request: Revision of a currently approved collection.

Respondents: Owners of vessels.

Abstract: The Coast Guard is required by the Omnibus Budget Reconciliation Act of 1990 to collect users fees from Coast Guard inspected commercial vessels. In order to do so the Coast Guard requires the submission of identifying information from the owners of these vessels.

Forms: None.

Burden Estimate: The estimated burden has decreased from 4,160 hours to 2,782 hours a year due to a reduction in the estimated annual number of responses.

2. *Title:* Audit Reports under the International Safety Management Code.

OMB Control Number: 1625–0084.

Type of Request: Revision of a currently approved collection.

Respondents: Owners and operators of vessels, and organizations authorized to issue ISM Code certificates for the United States.

Abstract: This information is used to determine the compliance status of U.S. vessels, subject to SOLAS 74, engaged in international trade. Organizations recognized by the Coast Guard to conduct ongoing audits of vessels' and companies' safety management systems. Respondents are vessel owners and operators and recognized organizations.

Forms: None.

Burden Estimate: The estimated burden has decreased from 18,610 hours to 17,660 hours a year due to a reduction in the estimated annual number of respondents.

3. *Title:* Facilities Transferring Oil or Hazardous Materials in Bulk—Letter of Intent and Operations Manual.

OMB Control Number: 1625–0093.

Type of Request: Revision of a currently approved collection.

Respondents: Operators of facilities that transfer oil or hazardous materials in bulk.

Abstract: A letter of Intent is a notice to the Coast Guard Captain of the Port that an operator intends to operate a facility that will transfer bulk oil or hazardous materials to or from vessels. An Operators Manual (OM) is also required. The OM establishes procedures for a facility to follow when conducting transfers and in the event of a spill.

Forms: None.

Burden Estimate: The estimated burden has decreased from 84,247 hours to 45,748 hours a year due to a reduction in the estimated annual number of respondents.

Authority: The Paperwork Reduction Act of 1995; 44 U.S.C. Chapter 35, as amended.

Dated: October 24, 2013.

R.E. Day,

Rear Admiral, U.S. Coast Guard, Assistant Commandant for Command, Control, Communications, Computers and Information Technology.

[FR Doc. 2013–25844 Filed 10–30–13; 8:45 am]

BILLING CODE 9110–04–P

DEPARTMENT OF HOMELAND SECURITY

Coast Guard

[USCG–2013–0861]

Information Collection Request to Office of Management and Budget

AGENCY: Coast Guard, DHS.

ACTION: Sixty-day notice requesting comments.

SUMMARY: In compliance with the Paperwork Reduction Act of 1995, the U.S. Coast Guard intends to submit an Information Collection Request (ICRs) to the Office of Management and Budget (OMB), Office of Information and Regulatory Affairs (OIRA), requesting approval of a revision to the following collection of information: 1625–0025, Carriage of Bulk Solids Requiring Special Handling—46 Code of Federal Regulation Part 148. Our ICR describes the information we seek to collect from the public. Before submitting this ICR to OIRA, the Coast Guard is inviting comments as described below.

DATES: Comments must reach the Coast Guard on or before December 30, 2013.

ADDRESSES: You may submit comments identified by Coast Guard docket number [USCG–2013–0861] to the Docket Management Facility (DMF) at the U.S. Department of Transportation (DOT). To avoid duplicate submissions, please use only one of the following means:

(1) *Online: http://www.regulations.gov.*

(2) *Mail:* DMF (M–30), DOT, West Building Ground Floor, Room W12–140, 1200 New Jersey Avenue SE., Washington, DC 20590–0001.

(3) *Hand delivery:* Same as mail address above, between 9 a.m. and 5 p.m., Monday through Friday, except Federal holidays. The telephone number is 202–366–9329.

(4) *Fax:* 202–493–2251. To ensure your comments are received in a timely manner, mark the fax, to attention Desk Officer for the Coast Guard.

The DMF maintains the public docket for this Notice. Comments and material received from the public, as well as documents mentioned in this Notice as being available in the docket, will become part of the docket and will be available for inspection or copying at room W12–140 on the West Building Ground Floor, 1200 New Jersey Avenue SE., Washington, DC, between 9 a.m. and 5 p.m., Monday through Friday, except Federal holidays. You may also find the docket on the Internet at *http://www.regulations.gov.*

Copies of the ICRs are available through the docket on the Internet at *http://www.regulations.gov.* Additionally, copies are available from: COMMANDANT (CG–612), ATTN PAPERWORK REDUCTION ACT MANAGER, US COAST GUARD, 2703 MARTIN LUTHER KING JR AVE SE. STOP 7710, WASHINGTON, DC 20593–7710.

FOR FURTHER INFORMATION CONTACT: Mr. Anthony Smith, Office of Information Management, telephone 202–475–3532, or fax 202–372–8405, for questions on these documents. Contact Ms. Barbara Hairston, Program Manager, Docket Operations, 202–366–9826, for questions on the docket.

SUPPLEMENTARY INFORMATION:

Public Participation and Request for Comments

This Notice relies on the authority of the Paperwork Reduction Act of 1995; 44 U.S.C. Chapter 35, as amended. An ICR is an application to OIRA seeking the approval, extension, or renewal of a Coast Guard collection of information (Collection). The ICR contains information describing the Collection's purpose, the Collection's likely burden on the affected public, an explanation of the necessity of the Collection, and other important information describing the Collections. There is one ICR for each Collection.

The Coast Guard invites comments on whether these ICRs should be granted based on the Collections being necessary for the proper performance of Departmental functions. In particular, the Coast Guard would appreciate comments addressing: (1) The practical utility of the Collections; (2) the accuracy of the estimated burden of the Collections; (3) ways to enhance the quality, utility, and clarity of information subject to the Collections; and (4) ways to minimize the burden of the Collections on respondents, including the use of automated collection techniques or other forms of information technology. In response to your comments, we may revise these ICRs or decide not to seek approval of revisions of the Collections. We will consider all comments and material received during the comment period.

We encourage you to respond to this request by submitting comments and related materials. Comments must contain the OMB Control Number of the ICR and the docket number of this request, [USCG–2013–0861], and must be received by December 30, 2013. We will post all comments received, without change, to *http://www.regulations.gov.* They will include any personal information you provide. We have an agreement with DOT to use their DMF. Please see the ''Privacy Act'' paragraph below.

Submitting Comments

If you submit a comment, please include the docket number [USCG–2013–0861], indicate the specific section of the document to which each comment applies, providing a reason for each comment. You may submit your comments and material online (*via http://www.regulations.gov*), by fax, mail, or hand delivery, but please use only one of these means. If you submit a comment online via *www.regulations.gov,* it will be considered received by the Coast Guard when you successfully transmit the comment. If you fax, hand deliver, or mail your comment, it will be considered as having been received by the Coast Guard when it is received at the DMF. We recommend you include your name, mailing address, an email address, or other contact information in the body of your document so that we can contact you if we have questions regarding your submission.

You may submit your comments and material by electronic means, mail, fax, or delivery to the DMF at the address under **ADDRESSES**; but please submit them by only one means. To submit your comment online, go to *http://www.regulations.gov,* and type ''USCG–2013–0861'' in the ''Keyword'' box. If you submit your comments by mail or hand delivery, submit them in an unbound format, no larger than 8½ by 11 inches, suitable for copying and electronic filing. If you submit comments by mail and would like to know that they reached the Facility, please enclose a stamped, self-addressed postcard or envelope. We will consider all comments and material received during the comment period and will address them accordingly.

Viewing comments and documents: To view comments, as well as documents mentioned in this Notice as

being available in the docket, go to *http://www.regulations.gov,* click on the ''read comments'' box, which will then become highlighted in blue. In the ''Keyword'' box insert ''USCG–2013–0861'' and click ''Search.'' Click the ''Open Docket Folder'' in the ''Actions'' column. You may also visit the DMF in Room W12–140 on the ground floor of the DOT West Building, 1200 New Jersey Avenue SE., Washington, DC 20590, between 9 a.m. and 5 p.m., Monday through Friday, except Federal holidays.

Privacy Act

Anyone can search the electronic form of comments received in dockets by the name of the individual submitting the comment (or signing the comment, if submitted on behalf of an association, business, labor union, etc.). You may review a Privacy Act statement regarding Coast Guard public dockets in the January 17, 2008, issue of the **Federal Register** (73 FR 3316).

Information Collection Requests

1. *Title:* Carriage of Bulk Solids Requiring Special Handling—46 Code of Federal Regulation Part 148.

OMB Control Number: 1625–0025.

Summary: As specified in 46 Code of Federal Regulation part 148, the application for a Special Permit allows the Coast Guard to determine the manner of safe carriage for unlisted materials. The information required by Dangerous Cargo Manifests and Shipping Papers permit vessel crews and emergency personnel to properly and safely respond to accidents involving hazardous substances. See 46 CFR part 148 Subpart B and §§ 148.60 and 148.70.

Need: The Coast Guard administers and enforces statutes and rules for the safe transport and stowage of hazardous materials, including bulk solids.

Forms: None.

Respondents: Owners and operators of vessels that carry certain bulk solids.

Frequency: On occasion.

Burden Estimate: The estimated burden has increased from 745 hours to 955 hours a year due to an increase in the estimated annual number of responses for Special Permits.

Dated: October 24, 2013.

R.E. Day,

Rear Admiral, U.S. Coast Guard, Assistant Commandant for Command, Control, Communications, Computers and Information Technology.

[FR Doc. 2013–25842 Filed 10–30–13; 8:45 am]

BILLING CODE 9110–04–P

DEPARTMENT OF THE INTERIOR

Fish and Wildlife Service

[FWS–HQ–IA–2013–N236; FXIA16710900000P5–123–FF09A30000]

Endangered Species; Marine Mammals; Receipt of Applications for Permit

AGENCY: Fish and Wildlife Service, Interior.

ACTION: Notice of receipt of applications for permit.

SUMMARY: We, the U.S. Fish and Wildlife Service, invite the public to comment on the following applications to conduct certain activities with endangered species, marine mammals, or both. With some exceptions, the Endangered Species Act (ESA) and Marine Mammal Protection Act (MMPA) prohibits activities with listed species unless Federal authorization is acquired that allows such activities.

DATES: We must receive comments or requests for documents on or before December 2, 2013. We must receive requests for marine mammal permit public hearings, in writing, at the address shown in the **ADDRESSES** section by December 2, 2013.

ADDRESSES: Brenda Tapia, Division of Management Authority, U.S. Fish and Wildlife Service, 4401 North Fairfax Drive, Room 212, Arlington, VA 22203; fax (703) 358–2280; or email *DMAFR@fws.gov.*

FOR FURTHER INFORMATION CONTACT: Brenda Tapia, (703) 358–2104 (telephone); (703) 358–2280 (fax); *DMAFR@fws.gov* (email).

SUPPLEMENTARY INFORMATION:

I. Public Comment Procedures

A. How do I request copies of applications or comment on submitted applications?

Send your request for copies of applications or comments and materials concerning any of the applications to the contact listed under **ADDRESSES**. Please include the **Federal Register** notice publication date, the PRT-number, and the name of the applicant in your request or submission. We will not consider requests or comments sent to an email or address not listed under **ADDRESSES**. If you provide an email address in your request for copies of applications, we will attempt to respond to your request electronically.

Please make your requests or comments as specific as possible. Please confine your comments to issues for which we seek comments in this notice, and explain the basis for your comments. Include sufficient information with your comments to allow us to authenticate any scientific or commercial data you include.

The comments and recommendations that will be most useful and likely to influence agency decisions are: (1) Those supported by quantitative information or studies; and (2) Those that include citations to, and analyses of, the applicable laws and regulations. We will not consider or include in our administrative record comments we receive after the close of the comment period (see **DATES**) or comments delivered to an address other than those listed above (see **ADDRESSES**).

B. May I review comments submitted by others?

Comments, including names and street addresses of respondents, will be available for public review at the street address listed under **ADDRESSES**. The public may review documents and other information applicants have sent in support of the application unless our allowing viewing would violate the Privacy Act or Freedom of Information Act. Before including your address, phone number, email address, or other personal identifying information in your comment, you should be aware that your entire comment—including your personal identifying information—may be made publicly available at any time. While you can ask us in your comment to withhold your personal identifying information from public review, we cannot guarantee that we will be able to do so.

II. Background

To help us carry out our conservation responsibilities for affected species, and in consideration of section 10(a)(1)(A) of the Endangered Species Act of 1973, as amended (16 U.S.C. 1531 *et seq.*), and the Marine Mammal Protection Act of 1972, as amended (16 U.S.C. 1361 *et seq.*), along with Executive Order 13576, ''Delivering an Efficient, Effective, and Accountable Government,'' and the President's Memorandum for the Heads of Executive Departments and Agencies of January 21, 2009—Transparency and Open Government (74 FR 4685; January 26, 2009), which call on all Federal agencies to promote openness and transparency in Government by disclosing information to the public, we invite public comment on these permit applications before final action is taken. Under the MMPA, you may request a hearing on any MMPA application received. If you request a hearing, give specific reasons why a hearing would be appropriate. The holding of such a

hearing is at the discretion of the Service Director.

III. Permit Applications

A. Endangered Species

Applicant: Wildlife Conservation Society, New York, NY; PRT–15467B

The applicant requests a permit to import two captive-bred female snow leopards (*Uncia uncia*) from Zoo Wuppertal and Tiergarten de Stadt, Germany, to the Bronx Zoo for the purpose of enhancement of propagation and survival of the species.

Applicant: U.S. Fish and Wildlife Service, Mexican Wolf Reintroduction Project, Region 2, Albuquerque, NM, PRT–104074

The applicant requests renewal of their permit to export and re-export live Mexican or lobo wolves (*Canis lupus baileyi*) for breeding and reintroduction, as well as the export and re-export of biological samples for genetic studies, for the purpose of enhancement of the survival of the species and scientific research. This notification covers activities to be conducted by the applicant over a 5-year period.

Applicant: Linda Pond, Lind, WA; PRT–17878B

The applicant requests a captive-bred wildlife registration under 50 CFR 17.21(g) for golden parakeet (*Guarouba guarouba*) to enhance the species' propagation or survival. This notification covers activities to be conducted by the applicant over a 5-year period.

Applicant: Hattiesburg Convention Commission (dba Hattiesburg Zoo), Hattiesburg, MS; PRT–18078B

The applicant requests a captive-bred wildlife registration under 50 CFR 17.21(g) for the following species, to enhance the species' propagation or survival. This notification covers activities to be conducted by the applicant over a 5-year period.

Species:

Ring-tailed lemur (*Lemur catta*)
Black and white ruffed lemur (*Varecia variegata*)
Red ruffed lemur (*Varecia rubra*)
Crowned lemur (*Eulemur coronatus*)
Black lemur (*Eulemur macaco*)
Brown lemur (*Eulemur fulvus*)
Cotton-top tamarin (*Saguinus oedipus*)
Lion-tailed macaque (*Macaca silenus*)
Lar gibbon (*Hylobates lar*)
Leopard (*Panthera pardus*)
Sumatran tiger (*Panthera tigris sumatrae*)
Baird's tapir (*Tapirus bairdii*)
Moluccan cockatoo (*Cacatua moluccensis*)
Galapagos tortoise (*Chelonoidis nigra*)
Radiated tortoise (*Astrochelys radiata*)
Yellow-spotted river turtle (*Podocnemis unifilis*)
Spotted pond turtle (*Geoclemys hamiltonii*)
Nile crocodile (*Crocodylus niloticus*)

Applicant: Jordan Mercer, Micanopy, FL; PRT–18705B

The applicant requests a captive-bred wildlife registration under 50 CFR 17.21(g) for radiated tortoise (*Astrochelys radiata*) to enhance the species' propagation or survival. This notification covers activities to be conducted by the applicant over a 5-year period.

Applicant: Triple S Wildlife Ranch, Calvin, OK; PRT–18877B

The applicant requests a captive-bred wildlife registration under 50 CFR 17.21(g) for scimitar-horned oryx (*Oryx dammah*) and addax (*Addax nasomaculatus*) to enhance the species' propagation or survival. This notification covers activities to be conducted by the applicant over a 5-year period.

Applicant: Triple S Wildlife Ranch, Calvin, OK; PRT–18755B

The applicant requests a permit authorizing interstate and foreign commerce, export, and cull of excess scimitar-horned oryx (*Oryx dammah*) and addax (*Addax nasomaculatus*) from the captive herd maintained at their facility, for the purpose of enhancement of the survival of the species. This notification covers activities over a 5-year period.

Applicant: Double B River Ranch, Comanche, TX; PRT–15680B

The applicant requests a captive-bred wildlife registration under 50 CFR 17.21(g) for scimitar-horned oryx (*Oryx dammah*) to enhance the species' propagation or survival. This notification covers activities to be conducted by the applicant over a 5-year period.

Applicant: Double B River Ranch, Comanche, TX; PRT–15681B

The applicant requests a permit authorizing interstate and foreign commerce, export, and cull of excess scimitar-horned oryx (*Oryx dammah*) from the captive herd maintained at their facility, for the purpose of enhancement of the survival of the species. This notification covers activities over a 5-year period.

Applicant: Tufts University, Medford, MA; PRT–19069B

The applicant requests a permit to import 300 biological samples from captive-held White-breasted thrashers (*Ramphocinclus brachyurus*) for the purpose of scientific research.

Applicant: Tyler Thomas, Alexandria Bay, NY; PRT–18729B

The applicant requests a captive-bred wildlife registration under 50 CFR 17.21(g) for the following species, to enhance the species' propagation or survival. This notification covers activities to be conducted by the applicant over a 5-year period.

Species:

Woylie (*Bettongia penicillata*)
Ring-tailed lemur (*Lemur catta*)
Black and white ruffed lemur (*Varecia variegata*)
Red ruffed lemur (*Varecia rubra*)
Cotton-top tamarin (*Saguinus oedipus*)
Moluccan cockatoo (*Cacatua moluccensis*)
Golden parakeet (*Guarouba guarouba*)
Chinese alligator (*Alligator sinensis*)
Radiated tortoise (*Astrochelys radiata*)

Applicant: Azlin Taxidermy, Clute, Texas; PRT–02251B

The applicant requests a permit to export the sport-hunted trophies of two scimitar-horned oryx (*Oryx dammah*) and one addax (*Addax nasomaculatus*) culled from a captive herd maintained in the state of Texas for the purpose of enhancement of the survival of the species.

Applicant: Azlin Taxidermy, Clute, Texas; PRT–02252B

The applicant requests a permit to export the sport-hunted trophies of one scimitar-horned oryx (*Oryx dammah*) and one addax (*Addax nasomaculatus*) culled from a captive herd maintained in the state of Texas for the purpose of enhancement of the survival of the species.

Applicant: Azlin Taxidermy, Clute, Texas; PRT–02253B

The applicant requests a permit to export the sport-hunted trophy of one scimitar-horned oryx (*Oryx dammah*) culled from a captive herd maintained in the state of Texas for the purpose of enhancement of the survival of the species.

Applicant: Joseph Nabers, Katy, TX; PRT–19040B

The applicant requests a permit to import a sport-hunted trophy of one male bontebok (*Damaliscus pygargus pygargus*) culled from a captive herd maintained under the management

program of the Republic of South Africa, for the purpose of enhancement of the survival of the species.

B. Endangered Marine Mammals and Marine Mammals

Applicant: The Marine Mammal Center, Sausalito, CA; PRT–101713

On November 5, 2012 (77 FR 66476), we published a notice of receipt of this application regarding this applicant's request for a permit to take southern sea otters (*Enhydra lutris nereis*) of all ages and sexes for the purpose of enhancement of the survival of the species by rescue, rehabilitation, and release of stranded animals. We have received new information and are reopening the comment period. This notification covers activities to be conducted by the applicant over a 5-year period.

Concurrent with publishing this notice in the **Federal Register**, we are forwarding copies of the above applications to the Marine Mammal Commission and the Committee of Scientific Advisors for their review.

Brenda Tapia,

Program Analyst/Data Administrator, Branch of Permits, Division of Management Authority.

[FR Doc. 2013–25796 Filed 10–30–13; 8:45 am]

BILLING CODE 4310–55–P

DEPARTMENT OF THE INTERIOR

Bureau of Land Management

[AA–6683–G, AA–6683–A2; LLAK940000–L14100000–HY0000–P]

Alaska Native Claims Selection

AGENCY: Bureau of Land Management, Interior.

ACTION: Notice of Decision Approving Lands for Conveyance

SUMMARY: As required by 43 CFR 2650.7(d), notice is hereby given that an appealable decision will be issued by the Bureau of Land Management (BLM) to Stuyahok, Limited. The decision approves the surface estate in the lands described below for conveyance pursuant to the Alaska Native Claims Settlement Act (43 U.S.C. 1601, *et seq.*). The subsurface estate in these lands will be conveyed to Bristol Bay Native Corporation when the surface estate is conveyed to Stuyahok, Limited. The lands are in the vicinity of New Stuyahok, Alaska, and are located in:

Seward Meridian, Alaska

T. 7 S., R. 45 W.,
Sec. 5.
Containing 640 acres.

T. 7 S., R. 48 W.,
Sec. 30.
Containing 476.41 acres.
Aggregating 1,116.41 acres.

Notice of the decision will also be published once a week for four consecutive weeks in the *Bristol Bay Times.*

DATES: Any party claiming a property interest in the lands affected by the decision may appeal the decision in accordance with the requirements of 43 CFR part 4 within the following time limits:

1. Unknown parties, parties unable to be located after reasonable efforts have been expended to locate, parties who fail or refuse to sign their return receipt, and parties who receive a copy of the decision by regular mail which is not certified, return receipt requested, shall have until December 2, 2013 to file an appeal.

2. Parties receiving service of the decision by certified mail shall have 30 days from the date of receipt to file an appeal.

Parties who do not file an appeal in accordance with the requirements of 43 CFR part 4 shall be deemed to have waived their rights. Notices of appeal transmitted by electronic means, such as facsimile or email, will not be accepted as timely filed.

ADDRESSES: A copy of the decision may be obtained from: Bureau of Land Management, Alaska State Office, 222 West Seventh Avenue, #13, Anchorage, Alaska 99513–7504.

FOR FURTHER INFORMATION CONTACT: The BLM by phone at 907–271–5960 or by email at *blm_ak_akso_public_room@blm.gov.* Persons who use a Telecommunications Device for the Deaf (TDD) may call the Federal Information Relay Service (FIRS) at 1–800–877–8339 to contact the BLM during normal business hours. In addition, the FIRS is available 24 hours a day, 7 days a week, to leave a message or question with the BLM. The BLM will reply during normal business hours.

Ralph L. Eluska, Sr.,

Land Transfer Resolution Specialist, Division of Lands and Cadastral.

[FR Doc. 2013–25932 Filed 10–30–13; 8:45 am]

BILLING CODE 4310–JA–P

DEPARTMENT OF THE INTERIOR

Bureau of Land Management

[LLNMA02000.L51010000.ER0000. LVRWG13G0940; NMNM–129147]

Notice of Intent To Prepare an Environmental Impact Statement for the Proposed Lobos CO_2 Pipeline Project in Arizona and New Mexico and Amend the Rio Puerco, Roswell, and Socorro Resource Management Plans

AGENCY: Bureau of Land Management, Interior.

ACTION: Notice of Intent.

SUMMARY: In compliance with the National Environmental Policy Act of 1969, as amended (NEPA), and the Federal Land Policy and Management Act of 1976, as amended (FLPMA), the Bureau of Land Management (BLM), Socorro Field Office, Socorro, New Mexico, intends to prepare an Environmental Impact Statement (EIS) in order to analyze the proposed Lobos carbon dioxide (CO_2) Pipeline Project and consider amendments to the Roswell Resource Management Plan (RMP) (1997), the Rio Puerco RMP (1986), and the Socorro RMP (2010). This notice announces the scoping process to solicit public comments and identifies issues.

DATES: This notice initiates the public scoping process for the RMP amendment with associated EIS. Comments on issues may be submitted in writing until January 29, 2014. The date(s) and location(s) of any scoping meetings will be announced at least 15 days in advance through local news media and the BLM Web site at: *http://www.blm.gov/nm/LobosCO2.* In order to be included in the Draft EIS, all comments must be received prior to the close of the 90-day scoping period or 15 days after the last public meeting, whichever is later. We will provide additional opportunities for public participation as appropriate.

ADDRESSES: You may submit comments by any of the following methods:

- *Email: BLM_NM_SFO_Comments@blm.gov*
- *Fax:* 575–835–0223, Attention: Andi Knight
- *Mail:* Bureau of Land Management, Socorro Field Office, Attention: Andi Knight, 901 S. Highway 85, Socorro, NM 87801–4168.

Documents pertinent to this proposal may be examined at the Socorro Field Office at the address above.

FOR FURTHER INFORMATION CONTACT: Gregory Helseth, Washington Office Project Manager, at 702–515–5173; or

email at *ghelseth@blm.gov.* Contact Mr. Helseth if you wish to have your name added to our mailing list. Persons who use a telecommunications device for the deaf (TDD) may call the Federal Information Relay Service (FIRS) at 1–800–877–8339 to contact the above individual during normal business hours. The FIRS is available 24 hours a day, 7 days a week, to leave a message or question with the above individual. You will receive a reply during normal business hours.

SUPPLEMENTARY INFORMATION: Kinder Morgan CO_2 Company, L.P. (Kinder Morgan) has filed a right-of-way (ROW) application with the BLM pursuant to Title V of FLPMA proposing to construct and operate the Lobos CO_2 Pipeline. This pipeline would consist of about 214 miles of 16-inch diameter pipeline, with an initial capacity of about 200 million standard cubic feet per day of CO_2. The pipeline would originate in the St. Johns CO_2 field in Apache County in eastern Arizona, cross central New Mexico south of Albuquerque, and terminate at the Main Line Valve 160 located along the existing Cortez Pipeline in Torrance County, New Mexico. It is anticipated that up to four pump stations would be strategically located along the proposed new pipeline route and interconnections would be made at the origin and terminus. A 40-mile-long, 30-inch-diameter loop would also be constructed parallel to the existing Cortez Pipeline in Chaves County, New Mexico. A new pump station would be added along the existing Cortez Pipeline at the existing location of Main Line Valve 170 in Torrance County, New Mexico, and upgrades in pumping capacity would be made to the existing Caprock Station on the Cortez Pipeline in Chaves County, New Mexico.

This document provides notice that the Socorro Field Office, Socorro, New Mexico, intends to prepare an EIS and a RMP Amendment for the Proposed Lobos CO_2 Pipeline Project in Arizona and New Mexico, announces the beginning of the scoping process, and seeks public input on issues and planning criteria. The planning area is located in Catron, Socorro, Torrance, and Chaves Counties, New Mexico; and Apache County, Arizona; and encompasses about 773 acres of BLM-managed public land that may result in a linear 58.96-mile right-of-way grant.

The purpose of the public scoping process is to determine relevant issues that will influence the scope of the environmental analysis, including alternatives, and guide the planning process. Preliminary issues for the plan amendment area have been identified by BLM personnel; Federal, State, and local agencies; and other stakeholders. The issues include: Loss of habitat and direct disturbance to plant and animal species (including special and sensitive status species); new visual intrusions on the landscape that would impact the scenic and visual quality of the area; impacts to cultural resources, lands that contain places of traditional cultural or religious importance, and historic sites; impacts to National Scenic or Historic Trails; and potential public health and safety impacts. Preliminary planning criteria include: The RMP Amendment and EIS will be completed in compliance with FLPMA, NEPA, and all other relevant Federal laws, executive orders, and management policies of the BLM; where existing planning decisions are still valid, those decisions may remain unchanged and be incorporated into the new RMP amendment; the RMP amendment will recognize valid existing rights; the RMP Amendment and EIS will be completed by coordination with cooperating agencies, government agencies, tribal entities, and all other interested parties.

You may submit comments on issues and planning criteria in writing to the BLM at any public scoping meeting, or you may submit them to the BLM using one of the methods listed in the **ADDRESSES** section above. To be most helpful, you should submit comments by the close of the 90-day scoping period or within 15 days after the last public meeting, whichever is later.

The BLM will use the NEPA public participation requirements to assist the agency in satisfying the public involvement requirements under Section 106 of the National Historic Preservation Act (NHPA) (16 U.S.C. 470(f)) pursuant to 36 CFR 800.2(d)(3). The information about historic and cultural resources within the area potentially affected by the proposed action will assist the BLM in identifying and evaluating impacts to such resources in the context of both NEPA and Section 106 of the NHPA.

The BLM will consult with Native American tribes and pueblos on a government-to-government basis in accordance with Executive Order 13175 and other policies. Tribal concerns, including impacts on Indian trust assets and potential impacts to cultural resources, will be given due consideration. Federal, State, and local agencies, along with tribes and other stakeholders that may be interested in or affected by the proposed action that the BLM is evaluating, are invited to participate in the scoping process and, if eligible, may request or be requested by the BLM to participate in the development of the environmental analysis as a cooperating agency. Before including your address, phone number, email address, or other personal identifying information in your comment, you should be aware that your entire comment—including your personal identifying information—may be made publicly available at any time. While you can ask us in your comment to withhold your personal identifying information from public review, we cannot guarantee that we will be able to do so.

The minutes and list of attendees for each scoping meeting will be available to the public and open for 30 days after the meeting to any participant who wishes to clarify the views he or she expressed. The BLM will evaluate identified issues to be addressed in the plan, and will place them into one of three categories:

1. Issues to be resolved in the plan amendment;

2. Issues to be resolved through policy or administrative action; or

3. Issues beyond the scope of this plan amendment.

The BLM will provide an explanation in the EIS as to why an issue was placed in category two or three. The public is also encouraged to help identify any management questions and concerns that should be addressed in the plan. The BLM will work collaboratively with interested parties to identify the management decisions that are best suited to local, regional, and national needs and concerns.

The BLM will use an interdisciplinary approach to develop the plan amendment in order to consider the variety of resource issues and concerns identified. Specialists with expertise in the following disciplines will be involved in the planning process: Rangeland management, minerals and geology, outdoor recreation, archaeology, paleontology, wildlife, lands and realty, hydrology, soils, sociology, and economics.

Authority: 40 CFR 1501.7 and 43 CFR 1610.2

Jesse J. Juen,

State Director.

[FR Doc. 2013–25929 Filed 10–30–13; 8:45 am]

BILLING CODE 4310–FB–P

DEPARTMENT OF THE INTERIOR

Bureau of Land Management

[LLUTW00000 L10600000 XZ0000 24 1A]

Notice of Mailing/Street Address Change for the BLM-Utah West Desert District and Salt Lake Field Offices

AGENCY: Bureau of Land Management, Interior.

ACTION: Notice.

SUMMARY: The mailing/street address for the Bureau of Land Management (BLM), West Desert District and Salt Lake Field Offices will be changing from 2370 South 2300 West, Salt Lake City, UT 84119–2022, to 2370 South Decker Lake Blvd., West Valley City, UT 84119–2022.

Persons who use a telecommunications device for the deaf (TDD) may call the Federal Information Relay Service (FIRS) at 1–800–877–8339 to leave a message or question for the above individual. The FIRS is available 24 hours a day, seven days a week. Replies are provided during normal business hours.

DATES: The proposed date will be on or about January 1, 2014.

FOR FURTHER INFORMATION CONTACT: Jared Posey, Administrative Officer, BLM West Desert District Office, at 801–977–4392.

Authority: Departmental Manual 382, Chapter 2.1.

Juan Palma,

State Director.

[FR Doc. 2013–25931 Filed 10–30–13; 8:45 am]

BILLING CODE 4310–DQ–P

DEPARTMENT OF THE INTERIOR

Bureau of Land Management

[LLNML00000 L12200000.DF0000]

Notice of Public Meeting, Las Cruces District Resource Advisory Council Meeting, New Mexico

AGENCY: Bureau of Land Management, Interior.

ACTION: Notice of public meeting.

SUMMARY: In accordance with the Federal Land Policy and Management Act and the Federal Advisory Committee Act, the Bureau of Land Management's (BLM) Las Cruces District Resource Advisory Council (RAC) will meet as indicated below.

DATES: The RAC will meet on November 20, 2013, at the BLM Las Cruces District Office Main Conference Room from 7:30 a.m.–4 p.m. The public may send written comments to the RAC at the BLM Las Cruces District Office, 1800 Marquess Street, Las Cruces, NM 88005.

FOR FURTHER INFORMATION CONTACT: Rena Gutierrez, BLM Las Cruces District, 1800 Marquess Street, Las Cruces, NM, 88005, 575–525–4338. Persons who use a telecommunications device for the deaf (TDD) may call the Federal Information Relay Service (FIRS) at 1–800–877–8229 to contact the above individual during normal business hours. The FIRS is available 24 hours a day, 7 days a week, to leave a message or question with the above individual. You will receive a reply during normal business hours.

SUPPLEMENTARY INFORMATION: The 10-member Las Cruces District RAC advises the Secretary of the Interior, through the BLM, on a variety of planning and management issues associated with public land management in New Mexico. Planned agenda items include a tour to the West Potrillo Wilderness Study Area (WSA) with a briefing on the Restore New Mexico project and management of WSA, opening remarks from the BLM Las Cruces District Manager, updates on ongoing issues and planning efforts, and a presentation on land tenure in the Las Cruces District.

A half-hour public comment period during which the public may address the RAC will begin at 3 p.m. All RAC meetings are open to the public. Depending on the number of individuals wishing to comment and time available, the time for individual oral comments may be limited.

Billy Link Lacewell,

Acting Deputy State Director, Lands and Resources.

[FR Doc. 2013–25870 Filed 10–30–13; 8:45 am]

BILLING CODE 4310–FB–P

DEPARTMENT OF THE INTERIOR

Bureau of Land Management

[14X.LLAZ956000.L14200000.BJ0000.241A]

Notice of Filing of Plats of Survey; Arizona

AGENCY: Bureau of Land Management, Interior.

ACTION: Notice of Filing of Plats of Survey; Arizona.

SUMMARY: The plats of survey of the described lands were officially filed in the Arizona State Office, Bureau of Land Management, Phoenix, Arizona, on dates indicated.

SUPPLEMENTARY INFORMATION:

The Gila and Salt River Meridian, Arizona

The plat representing the dependent resurvey of a portion of the east boundary, a portion of the subdivisional lines, a portion of Homestead Entry Surveys 57 and 173 and the subdivision of section 25, Township 9 North, Range 10 East, accepted October 22, 2013, and officially filed October 23, 2013, for Group 1110, Arizona.

This plat was prepared at the request of the United States Forest Service.

The plat, in three sheets, constituting the map of the legal descriptive boundary of the Davis-Monthan Air Force Base, and the survey in Townships 14 and 15 South, Ranges 14 and 15 East, accepted August 7, 2013, and officially filed August 9, 2013, for Group 1111, Arizona.

This plat was prepared at the request of the General Services Administration.

The plat representing the dependent resurvey of a portion of the subdivisional lines and a portion of the subdivision of section 8 and the subdivision of the NE¼ of the SW¼ of section 8, Township 7 South, Range 27 East, accepted September 4, 2013, and officially filed September 6, 2013, for Group 1119, Arizona.

This plat was prepared at the request of the Bureau of Land Management.

The San Bernardino Meridian, Arizona

The plat representing the subdivision of section 29 and the survey of the meanders of the present left bank of the Colorado River in section 29, Township 16 South, Range 22 East, accepted October 18, 2013, and officially filed October 18, 2013, for Group 1120, Arizona.

This plat was prepared at the request of the Bureau of Land Management.

A person or party who wishes to protest against any of these surveys must file a written protest with the Arizona State Director, Bureau of Land Management, stating that they wish to protest.

A statement of reasons for a protest may be filed with the notice of protest to the State Director, or the statement of reasons must be filed with the State Director within thirty (30) days after the protest is filed.

FOR FURTHER INFORMATION CONTACT: These plats will be available for inspection in the Arizona State Office, Bureau of Land Management, One North Central Avenue, Suite 800, Phoenix, Arizona 85004–4427. Persons who use a telecommunications device for the deaf (TDD) may call the Federal Information Relay Service (FIRS) at 1–800–877–8339 to contact the above individual during normal business hours. The FIRS is available 24 hours a day, 7 days a week, to leave a message or question with the above individual. You will receive a reply during normal business hours.

Stephen K. Hansen,

Chief Cadastral Surveyor of Arizona.

[FR Doc. 2013–25869 Filed 10–30–13; 8:45 am]

BILLING CODE 4310–32–P

DEPARTMENT OF THE INTERIOR

National Park Service

[NPS–WASO–NAGPRA–14043; PPWOCRADN0–PCU00RP14.R50000]

Notice of Inventory Completion: University of Michigan, Ann Arbor, MI

AGENCY: National Park Service, Interior.

ACTION: Notice.

SUMMARY: The University of Michigan has completed an inventory of human remains and associated funerary objects, in consultation with the appropriate Indian tribes or Native Hawaiian organizations, and has determined that there is no cultural affiliation between the human remains and associated funerary objects and any present-day Indian tribes or Native Hawaiian organizations. Representatives of any Indian tribe or Native Hawaiian organization not identified in this notice that wish to request transfer of control of these human remains and associated funerary objects should submit a written request to the University of Michigan. If no additional requestors come forward, transfer of control of the human remains and associated funerary objects to the Indian tribes or Native Hawaiian organizations stated in this notice may proceed.

DATES: Representatives of any Indian tribe or Native Hawaiian organization not identified in this notice that wish to request transfer of control of these human remains and associated funerary objects should submit a written request with information in support of the request to the University of Michigan at the address in this notice by December 2, 2013.

ADDRESSES: Dr. Ben Secunda, NAGPRA Project Manager, University of Michigan, Office of the Vice President for Research, 4080 Fleming Building, 503 Thompson St., Ann Arbor, MI 48109–1340, telephone (734) 647–9085, email *bsecunda@umich.edu.*

SUPPLEMENTARY INFORMATION: Notice is here given in accordance with the Native American Graves Protection and Repatriation Act (NAGPRA), 25 U.S.C. 3003, of the completion of an inventory of human remains and associated funerary objects under the control of the University of Michigan, Ann Arbor, MI. The human remains and associated funerary objects were removed from Jackson, Lenawee, Livingston, Oakland, Sanilac, and Shiawassee Counties, MI.

This notice is published as part of the National Park Service's administrative responsibilities under NAGPRA, 25 U.S.C. 3003(d)(3) and 43 CFR 10.11(d). The determinations in this notice are the sole responsibility of the museum, institution, or Federal agency that has control of the Native American human remains and associated funerary objects. The National Park Service is not responsible for the determinations in this notice.

Consultation

A detailed assessment of the human remains and associated funerary objects was made by the University of Michigan Museum of Anthropology professional staff in consultation with representatives of the Bay Mills Indian Community, Michigan; Chippewa-Cree Indians of the Rocky Boy's Reservation, Montana; Grand Traverse Band of Ottawa and Chippewa Indians, Michigan; Hannahville Indian Community, Michigan; Keweenaw Bay Indian Community, Michigan; Lac Vieux Desert Band of Lake Superior Chippewa Indians of Michigan; Little River Band of Ottawa Indians, Michigan; Little Traverse Bay Bands of Odawa Indians, Michigan; Match-e-be-nash-she-wish Band of Pottawatomi Indians of Michigan; Nottawaseppi Huron Band of the Potawatomi, Michigan (previously listed as the Huron Potawatomi, Inc.); Pokagon Band of Potawatomi Indians, Michigan and Indiana; Saginaw Chippewa Indian Tribe of Michigan; and the Sault Ste. Marie Tribe of Chippewa Indians of Michigan.

Additional requests for consultation were sent to the Bad River Band of the Lake Superior Tribe of Chippewa Indians of the Bad River Reservation, Wisconsin; Bois Forte Band (Nett Lake) of the Minnesota Chippewa Tribe, Minnesota; Citizen Potawatomi Nation, Oklahoma; Fond du Lac Band of the Minnesota Chippewa Tribe, Minnesota; Forest County Potawatomi Community, Wisconsin; Grand Portage Band of the Minnesota Chippewa Tribe, Minnesota; Lac Courte Oreilles Band of Lake Superior Chippewa Indians of Wisconsin; Lac du Flambeau Band of Lake Superior Chippewa Indians of the Lac du Flambeau Reservation of Wisconsin; Leech Lake Band of the Minnesota Chippewa Tribe, Minnesota; Mille Lacs Band of the Minnesota Chippewa Tribe, Minnesota; Ottawa Tribe of Oklahoma; Prairie Band Potawatomi Nation (previously listed as the Prairie Band of Potawatomi Nation, Kansas); Quechan Tribe of the Fort Yuma Indian Reservation, California & Arizona; Red Cliff Band of Lake Superior Chippewa Indians of Wisconsin; Red Lake Band of Chippewa Indians, Minnesota; Sokaogon Chippewa Community, Wisconsin; St. Croix Chippewa Indians of Wisconsin; Turtle Mountain Band of Chippewa Indians of North Dakota; White Earth Band of the Minnesota Chippewa Tribe, Minnesota; and the Wyandotte Nation.

Hereafter, all tribes listed in this section are referred to as ''The Tribes.''

History and Description of the Remains

On an unknown date prior to 1965, human remains representing, at minimum, 1 individual were removed from the O'Brien Road site (20JA247) in Jackson County, MI. Workers unearthed human remains during gravel pit operations near Spring Arbor Township. Amateur archeologists excavated the remains of one adult male from the site and donated them to the University of Michigan Museum of Anthropology (UMMA) in 1964. No date or time period for the human remains could be established. No known individuals were identified. No associated funerary objects are present.

In 1930, human remains representing, at minimum, 12 individuals were removed from the Hayworth site (20JA250) in Jackson County, MI. A landowner unearthed the burials while conducting road-grading activities on his property and collected the remains of ten adults, one infant, and one cremated individual. The ten adults and one infant were found buried in flexed positions, with groupings of individuals noted. The landowner donated the human remains to the UMMA on October 31, 1930. The human remains date to the Pre-Contact Period based on mortuary treatment. No known individuals were identified. No associated funerary objects are present.

On an unknown date prior to 1977, human remains representing, at minimum, 1 individual were removed from the Garrison site (20LE99) in Lenawee County, MI. A landowner found the remains of one adult female while working on her property. The landowner collected the human remains and gave them to a local archeologist in 1976, who subsequently donated the remains to the UMMA within the same year. No date or time period for the human remains could be established. No known individuals were identified. No associated funerary objects are present.

In 1958, human remains representing, at minimum, 8 individuals were removed from the Harsh Family site (20LE1) in Lenawee County, MI. A landowner discovered the burials while conducting dirt removal activities on his property. Dan Morse of the UMMA assisted the landowner with the excavation of two burial pits containing the remains of seven adults and one

child. The landowner donated the collections to the UMMA on October 4, 1958. No date or time period for the human remains could be established. No known individuals were identified. No associated funerary objects are present.

In 1974, human remains representing, at minimum, 12 individuals were removed from the GL–0174 site (20LE38) in Lenawee County, MI. Representatives of the UMMA found and excavated a small borrow pit that contained commingled burials in Macon Township and collected the remains of eight cremated adults, three cremated children, and one non-cremated adult, along with two associated funerary objects. Red ochre was noted as covering the cremations. The human remains date to the Late Archaic Period based on mortuary treatment. No known individuals were identified. The 2 associated funerary objects present are 1 stone ''cloud blower'' pipe fragment and 1 animal bone.

In 1973, human remains representing, at minimum, 1 individual were removed from the Bernard Pepper site (20LE37) in Lenawee County, MI. A landowner discovered the burial on his property during construction activities and contacted the Michigan State Police. The police collected the remains of one older female and one associated funerary and sent them to the UMMA for identification. Donald F. Huelke, Professor of Anatomy, concluded the individual was Native American. The landowner subsequently donated the collections to the UMMA. The human remains date to sometime between the Late Archaic and Middle Woodland Periods based on the funerary object. No known individuals were identified. The 1 associated funerary object present is a *Busycon contrarium* conch shell.

In 1960, human remains representing, at minimum, 1 individual were removed from the Hamburg site (20LV1) in Livingston County, MI. The son of a landowner living near Whitewood Lake found the human remains submerged in the water near the shoreline. They were brought to the UMMA and identified as those of an adult female. The landowner donated the collections to the UMMA in July of 1960. No date or time period for the human remains could be established. No known individuals were identified. No associated funerary are present.

In 1997, human remains representing, at minimum, 1 individual were removed from the Whitmore Lake site in Livingston County, MI. A construction crew engaged in gravel operations near Whitmore Lake discovered the burial and contacted the Whitmore Lake Police Department. The police collected an isolated, fragmented cranium of an adult male and sent the remains to the Washtenaw County Medical Examiner's Office. The Medical Examiner concluded they were Native American and donated them to the UMMA. No date or time period for the human remains could be established. No known individuals were identified. No associated funerary objects are present.

In 1951, human remains representing, at minimum, 2 individuals were removed from the Tessmer site (20OK5) in Oakland County, MI. The burials were discovered on private land east of Pontiac, MI, during commercial gravel operations that destroyed two-thirds of a Pre-Contact Period cemetery. Emerson Greenman of the UMMA excavated the cemetery with the assistance of R. Hatt and A. Spaulding and collected the remains of one adult male, one young adult female, and one associated funerary object. One cranium showed evidence of an ancient plaque removal. Museum records indicate that the UMMA's total holdings from this site entered the museum between the years 1951–1959 as portions of 4 separate accessions. The completion of an artificial lake completely destroyed the site in 1959. The human remains date to the Middle Late Woodland Period (900–1200 A.D.) based on mortuary treatment. No known individuals were identified. The 1 associated funerary object present is a ceramic sherd.

In 1934, human remains representing, at minimum, 14 individuals were removed from the Farmington 1 site (20OK2) in Oakland County, MI. Workers for a commercial gravel pit operation discovered the burials and contacted the Oakland County Sherriff's Department. The Sheriff's Deputies contacted James Griffin of the UMMA to investigate the site. Griffin identified and excavated a large ossuary pit, collecting the remains of 10 adults, one sub-adult (under 12 years old), two children, and one neonate, along with 161 associated funerary objects. Ancient modifications were noted on one set of long bones with the ends cut, shaved, and drilled. Additionally, one cranium of an older male, with two ancient drillings, was found encased in blue clay and with blue clay packed into the nose and mouth cavities. Based on historical documentation, archeologists have associated these types of post-mortem holes/drillings with the ''feast of the dead'' where skeletons were ceremonially re-articulated using such holes. The human remains date to the Middle Late Woodland Period (900–1200 A.D.) based on diagnostic artifacts and mortuary treatment. No known individuals were identified. The 161 associated funerary objects present are all ceramic sherds.

In November 1934, human remains representing, at minimum, 8 individuals were removed from the Yerkes site (20OK3) in Oakland County, MI. A landowner collected the remains of seven adults and one sub-adult, along with 40 associated funerary objects, on his property near 10 Mile Road and donated these collections to the UMMA. The human remains date to sometime during the Middle Late Woodland Period to the Late Late Woodland Period (900–1400 A.D.) based on diagnostic artifacts. The 40 associated funerary objects present are 1 animal mandible fragment, 2 animal teeth, 1 unworked snail shell, 35 ceramic sherds, and 1 worked flint.

In 1927, human remains representing, at minimum, 21 individuals were removed from the Troy Township Gravel Pit site (20OK4) in Oakland County, MI. Workers discovered the burials during gravel pit operations. They contacted Wilbert Hinsdale of the UMMA who excavated the remains of 14 adults, four adolescents, and three children, along with eight associated funerary objects. Within a month after Hinsdale had excavated the burials, a local woman contacted him to report that she had found a bone needle in the vicinity of the site and wanted to donate it to the museum. Hinsdale returned to the site to collect the donation and search the burial site again. He found and collected one small clay cup. The human remains date to the Middle Late Woodland Period (900–1200 A.D.) based on diagnostic artifacts. No known individuals were identified. The 10 associated funerary objects present are 5 ceramic sherds, 3 faunal bones, 1 animal bone needle, and 1 small clay cup with traces of yellow ochre.

In 1957, human remains representing, at minimum, 1 individual were removed from the Union Lake site (20OK8) in Oakland County, MI. A contractor found and removed the remains of one adult male, located in a peat deposit, while constructing an artificial lake. He later donated the human remains to the UMMA on May 18, 1960. The human remains date to the Middle Archaic Period (7000 +/− 400 years B.P.) based on pollen analysis from residues inside the cranium. No known individuals were identified. No associated funerary objects are present.

In 1939, human remains representing, at minimum, 5 individuals were removed from the Hamilton site (20OK338) in Oakland County, MI. A landowner collected the remains of four females and one male from a gravel pit

and donated them to the UMMA on June 13, 1940. Ancient modifications were noted on the remains, with one cranium having been drilled and evidence of cradle boarding noted on several of the crania. The human remains date to the Early-to-Late Woodland Period (500–1400 A.D.) based on mortuary treatment. No known individuals were identified. No associated funerary objects are present.

In September 1978, human remains representing, at minimum, 1 individual were removed from the Tynride site (20OK55) in Oakland County, MI. Construction workers discovered the burial and contacted the Oakland County Medical Examiner. The Medical Examiner collected remains from one young adult female, along with one associated funerary object, and subsequently donated these collections to the UMMA in November of 1978. No date or time period for the human remains could be established. No known individuals were identified. The 1 associated funerary object present is a animal bone.

In 1940, human remains representing, at minimum, 3 individuals were removed from the Schreiber site in (20SL3) Sanilac County, MI. A landowner collected the remains of three adults, along with two associated funerary objects, from a site near the shore of Lake Huron and donated these collections to the UMMA on October 26, 1940. The human remains date to the Early Late Woodland Period (500–1000 A.D.) based on diagnostic artifacts. No known individuals were identified. The 2 associated funerary objects present are both ceramic sherds.

At some time during or prior to June of 1926, human remains representing, at minimum, 7 individuals were removed from the Warren Clough site (20SE29) in Shiawassee County, MI. The UMMA's Emerson Greenman excavated the remains of five adults, one adolescent, and one child from one of three mounds that comprised the site. Museum records indicate that either looters or amateur archeologists had destroyed the other mounds. The human remains date to the Woodland Period (500–1400 A.D.) based on mortuary practices. No known individuals were identified. No associated funerary objects are present.

On an unknown date, human remains representing, at minimum, 2 individuals were removed from the Gilde-Thorpe site (20SE8) in Shiawassee County, MI. Construction workers engaged in gravel operations collected the remains of one adult male and one child, along with two associated funerary objects. Red ochre was noted as being present in the burials. The human remains were donated to the UMMA in 1983. The human remains date to the Archaic Period (3500–500 B.C.) based on mortuary treatment. No known individuals were identified. The 2 associated funerary objects present are 1 piece of red ochre and 1 piece of yellow ochre.

Determinations Made by the University of Michigan Museum of Anthropology

Officials of the University of Michigan Museum of Anthropology have determined that:

- Pursuant to 25 U.S.C. 3001(9), the human remains described in this notice are Native American based on cranial morphology, dental traits, accession documentation, and archeological context.
- Pursuant to 25 U.S.C. 3001(9), the human remains described in this notice represent the physical remains of 101 individuals of Native American ancestry.
- Pursuant to 25 U.S.C. 3001(3)(A), the 220 objects described in this notice are reasonably believed to have been placed with or near individual human remains at the time of death or later as part of the death rite or ceremony.
- Pursuant to 25 U.S.C. 3001(2), a relationship of shared group identity cannot be reasonably traced between the Native American human remains and associated funerary objects and any present-day Indian tribe.
- According to final judgments of the Indian Claims Commission or the Court of Federal Claims, the land from which the Native American human remains and associated funerary objects were removed is the aboriginal land of the Bad River Band of the Lake Superior Tribe of Chippewa Indians of the Bad River Reservation, Wisconsin; Bay Mills Indian Community, Michigan; Bois Forte Band (Nett Lake) of the Minnesota Chippewa Tribe, Minnesota; Chippewa-Cree Indians of the Rocky Boy's Reservation, Montana; Citizen Potawatomi Nation, Oklahoma; Fond du Lac Band of the Minnesota Chippewa Tribe, Minnesota; Forest County Potawatomi Community, Wisconsin; Grand Portage Band of the Minnesota Chippewa Tribe, Minnesota; Grand Traverse Band of Ottawa and Chippewa Indians, Michigan; Hannahville Indian Community, Michigan; Keweenaw Bay Indian Community, Michigan; Lac Courte Oreilles Band of Lake Superior Chippewa Indians of Wisconsin; Lac du Flambeau Band of Lake Superior Chippewa Indians of the Lac du Flambeau Reservation of Wisconsin; Lac Vieux Desert Band of Lake Superior Chippewa Indians of Michigan; Leech Lake Band of the Minnesota Chippewa Tribe, Minnesota; Match-e-be-nash-she-wish Band of Pottawatomi Indians of Michigan; Mille Lacs Band of the Minnesota Chippewa Tribe, Minnesota; Nottawaseppi Huron Band of the Potawatomi, Michigan (previously listed as the Huron Potawatomi, Inc.); Pokagon Band of Potawatomi Indians, Michigan and Indiana; Prairie Band Potawatomi Nation (previously listed as the Prairie Band of Potawatomi Nation, Kansas); Quechan Tribe of the Fort Yuma Indian Reservation, California & Arizona; Red Cliff Band of Lake Superior Chippewa Indians of Wisconsin; Red Lake Band of Chippewa Indians, Minnesota; Saginaw Chippewa Indian Tribe of Michigan; Sault Ste. Marie Tribe of Chippewa Indians, Michigan; Sokaogon Chippewa Community, Wisconsin; St. Croix Chippewa Indians of Wisconsin; Turtle Mountain Band of Chippewa Indians of North Dakota; White Earth Band of the Minnesota Chippewa Tribe, Minnesota; and the Wyandotte Nation.
- Treaties, Acts of Congress, or Executive Orders, indicate that the land from which the Native American human remains and associated funerary objects were removed is the aboriginal land of The Tribes.
- Pursuant to 43 CFR 10.11(c)(1), the disposition of the human remains and associated funerary objects may be to The Tribes.

Additional Requestors and Disposition

Representatives of any Indian tribe or Native Hawaiian organization not identified in this notice that wish to request transfer of control of these human remains and associated funerary objects should submit a written request with information in support of the request to Dr. Ben Secunda, NAGPRA Project Manager, University of Michigan, Office of the Vice President for Research, 4080 Fleming Building, 503 Thompson St., Ann Arbor, MI 48109–1340, telephone (734) 647–9085, email *bsecunda@umich.edu,* by December 2, 2013. After that date, if no additional requestors have come forward, transfer of control of the human remains and associated funerary objects to The Tribes may proceed.

The University of Michigan is responsible for notifying The Tribes that this notice has been published.

Dated: September 16, 2013.

Sherry Hutt,

Manager, National NAGPRA Program.

[FR Doc. 2013–25989 Filed 10–30–13; 8:45 am]

BILLING CODE 4312–50–P

DEPARTMENT OF THE INTERIOR

National Park Service

[NPS–WASO–NAGPRA–14038; PPWOCRADN0–PCU00RP14.R50000]

Notice of Inventory Completion: University of Michigan, Ann Arbor, MI

AGENCY: National Park Service, Interior.

ACTION: Notice.

SUMMARY: The University of Michigan has completed an inventory of human remains and associated funerary objects, in consultation with the appropriate Indian tribes or Native Hawaiian organizations, and has determined that there is no cultural affiliation between the human remains and associated funerary objects and any present-day Indian tribes or Native Hawaiian organizations. Representatives of any Indian tribe or Native Hawaiian organization not identified in this notice that wish to request transfer of control of these human remains and associated funerary objects should submit a written request to the University of Michigan. If no additional requestors come forward, transfer of control of the human remains and associated funerary objects to the Indian tribes or Native Hawaiian organizations stated in this notice may proceed.

DATES: Representatives of any Indian tribe or Native Hawaiian organization not identified in this notice that wish to request transfer of control of these human remains and associated funerary objects should submit a written request with information in support of the request to the University of Michigan at the address in this notice by December 2, 2013

ADDRESSES: Dr. Ben Secunda, NAGPRA Project Manager, University of Michigan, Office of the Vice President for Research, 4080 Fleming Building, 503 Thompson St., Ann Arbor, MI 48109–1340, telephone (734) 647–9085, email *bsecunda@umich.edu.*

SUPPLEMENTARY INFORMATION: Notice is here given in accordance with the Native American Graves Protection and Repatriation Act (NAGPRA), 25 U.S.C. 3003, of the completion of an inventory of human remains and associated funerary objects under the control of the University of Michigan, Ann Arbor, MI. The human remains and associated funerary objects were removed from Emmet County, MI.

This notice is published as part of the National Park Service's administrative responsibilities under NAGPRA, 25 U.S.C. 3003(d)(3) and 43 CFR 10.11(d). The determinations in this notice are the sole responsibility of the museum, institution, or Federal agency that has control of the Native American human remains and associated funerary objects. The National Park Service is not responsible for the determinations in this notice.

Consultation

A detailed assessment of the human remains and associated funerary objects was made by the University of Michigan Museum of Anthropology professional staff in consultation with representatives of the Bay Mills Indian Community, Michigan; Chippewa-Cree Indians of the Rocky Boy's Reservation, Montana; Grand Traverse Band of Ottawa and Chippewa Indians, Michigan; Hannahville Indian Community, Michigan; Keweenaw Bay Indian Community, Michigan; Lac Vieux Desert Band of Lake Superior Chippewa Indians of Michigan; Little River Band of Ottawa Indians, Michigan; Little Traverse Bay Bands of Odawa Indians, Michigan; Match-e-be-nash-she-wish Band of Pottawatomi Indians of Michigan; Nottawaseppi Huron Band of the Potawatomi, Michigan (previously listed as the Huron Potawatomi, Inc.); Pokagon Band of Potawatomi Indians, Michigan and Indiana; Saginaw Chippewa Indian Tribe of Michigan; and the Sault Ste. Marie Tribe of Chippewa Indians, Michigan.

Additional requests for consultation were sent to the Absentee-Shawnee Tribe of Indians of Oklahoma; Bad River Band of the Lake Superior Tribe of Chippewa Indians of the Bad River Reservation, Wisconsin; Bois Forte Band (Nett Lake) of the Minnesota Chippewa Tribe, Minnesota; Citizen Potawatomi Nation, Oklahoma; Delaware Nation, Oklahoma; Delaware Tribe of Indians; Eastern Shawnee Tribe of Oklahoma; Fond du Lac Band of the Minnesota Chippewa Tribe, Minnesota; Forest County Potawatomi Community, Wisconsin; Grand Portage Band of the Minnesota Chippewa Tribe, Minnesota; Kickapoo Traditional Tribe of Texas; Kickapoo Tribe of Indians of the Kickapoo Reservation in Kansas; Kickapoo Tribe of Oklahoma; Lac Courte Oreilles Band of Lake Superior Chippewa Indians of Wisconsin; Lac du Flambeau Band of Lake Superior Chippewa Indians of the Lac du Flambeau Reservation of Wisconsin; Leech Lake Band of the Minnesota Chippewa Tribe, Minnesota; Miami Tribe of Oklahoma; Mille Lacs Band of the Minnesota Chippewa Tribe, Minnesota; Ottawa Tribe of Oklahoma; Peoria Tribe of Indians of Oklahoma; Prairie Band Potawatomi Nation (previously listed as the Prairie Band of Potawatomi Nation, Kansas); Quechan Tribe of the Fort Yuma Indian Reservation, California & Arizona; Red Cliff Band of Lake Superior Chippewa Indians of Wisconsin; Red Lake Band of Chippewa Indians, Minnesota; Shawnee Tribe; Sokaogon Chippewa Community, Wisconsin; St. Croix Chippewa Indians of Wisconsin; Turtle Mountain Band of Chippewa Indians of North Dakota; White Earth Band of the Minnesota Chippewa Tribe, Minnesota; and the Wyandotte Nation.

Hereafter, all tribes listed in this section are referred to as ''The Tribes.''

History and Description of the Remains

On an unknown date prior to 1964, human remains representing, at minimum, 1 individual were removed from the Harbor Springs site (20EM17) in Emmet County, MI. Amateur archeologists or Arthur Jelinek of the University of Michigan Museum of Anthropology (UMMA) found the site. The remains of one middle-aged adult male and 1 lot of small conifer wood fragments were collected from the site. The fragments of wood, which appear to have been worked, were stored at the museum in a box labeled ''from burial'' and were considered to be associated funerary objects. Site records indicate that this site may be the same as, or related to, the Wequetonsing site (20EM6) in Emmet County, MI. No date or time period for the human remains could be established. No known individuals were identified. The 1 associated funerary object present is 1 lot of wood fragments.

Determinations Made by the University of Michigan Museum of Anthropology

Officials of the University of Michigan Museum of Anthropology have determined that:

- Pursuant to 25 U.S.C. 3001(9), the human remains described in this notice are Native American based on cranial morphology, dental traits, accession documentation, and archeological context.
- Pursuant to 25 U.S.C. 3001(9), the human remains described in this notice represent the physical remains of 1 individual of Native American ancestry.
- Pursuant to 25 U.S.C. 3001(3)(A), the 1 lot of objects described in this notice is reasonably believed to have been placed with or near individual human remains at the time of death or later as part of the death rite or ceremony.
- Pursuant to 25 U.S.C. 3001(2), a relationship of shared group identity cannot be reasonably traced between the Native American human remains and

associated funerary objects and any present-day Indian tribe.

• According to final judgments of the Indian Claims Commission or the Court of Federal Claims, the land from which the Native American human remains and associated funerary objects were removed is the aboriginal land of the Bad River Band of the Lake Superior Tribe of Chippewa Indians of the Bad River Reservation, Wisconsin; Bay Mills Indian Community, Michigan; Bois Forte Band (Nett Lake) of the Minnesota Chippewa Tribe, Minnesota; Chippewa-Cree Indians of the Rocky Boy's Reservation, Montana; Fond du Lac Band of the Minnesota Chippewa Tribe, Minnesota; Grand Portage Band of the Minnesota Chippewa Tribe, Minnesota; Grand Traverse Band of Ottawa and Chippewa Indians, Michigan; Keweenaw Bay Indian Community, Michigan; Lac Courte Oreilles Band of Lake Superior Chippewa Indians of Wisconsin; Lac du Flambeau Band of Lake Superior Chippewa Indians of the Lac du Flambeau Reservation of Wisconsin; Lac Vieux Desert Band of Lake Superior Chippewa Indians, Michigan; Leech Lake Band of the Minnesota Chippewa Tribe, Minnesota; Little River Band of Ottawa Indians, Michigan; Little Traverse Bay Bands of Odawa Indians, Michigan; Mille Lacs Band of the Minnesota Chippewa Tribe, Minnesota; Ottawa Tribe of Oklahoma; Red Cliff Band of Lake Superior Chippewa Indians of Wisconsin; Red Lake Band of Chippewa Indians, Minnesota; Saginaw Chippewa Indian Tribe of Michigan; St. Croix Chippewa Indians of Wisconsin; Sault Ste. Marie Tribe of Chippewa Indians of Michigan; Sokaogon Chippewa Community, Wisconsin; Turtle Mountain Band of Chippewa Indians of North Dakota; and the White Earth Band of the Minnesota Chippewa Tribe, Minnesota.

• Treaties, Acts of Congress, or Executive Orders, indicate that the land from which the Native American human remains and associated funerary objects were removed is the aboriginal land of The Tribes.

• Pursuant to 43 CFR 10.11(c)(1), the disposition of the human remains and associated funerary objects may be to The Tribes.

Additional Requestors and Disposition

Representatives of any Indian tribe or Native Hawaiian organization not identified in this notice that wish to request transfer of control of these human remains and associated funerary objects should submit a written request with information in support of the request to Dr. Ben Secunda, NAGPRA Project Manager, University of Michigan, Office of the Vice President for Research, 4080 Fleming Building, 503 Thompson St., Ann Arbor, MI 48109–1340, telephone (734) 647–9085, email *bsecunda@umich.edu,* by December 2, 2013. After that date, if no additional requestors have come forward, transfer of control of the human remains and associated funerary objects to The Tribes may proceed.

The University of Michigan is responsible for notifying The Tribes that this notice has been published.

Dated: September 16, 2013.

Sherry Hutt,

Manager, National NAGPRA Program.

[FR Doc. 2013–25996 Filed 10–30–13; 8:45 am]

BILLING CODE 4312–50–P

DEPARTMENT OF THE INTERIOR

National Park Service

[NPS–WASO–NAGPRA–14169; PPWOCRADN0–PCU00RP14.R50000]

Notice of Inventory Completion: Center for Archaeological Research at the University of Texas at San Antonio, San Antonio, TX

AGENCY: National Park Service, Interior.

ACTION: Notice.

SUMMARY: The Center for Archaeological Research at the University of Texas at San Antonio has completed an inventory of human remains, in consultation with the appropriate Native Hawaiian organizations, and has determined that there is a cultural affiliation between the human remains and present-day Native Hawaiian organizations. Lineal descendants or representatives of any Native Hawaiian organization not identified in this notice that wish to request transfer of control of these human remains should submit a written request to the Center for Archaeological Research at the University of Texas at San Antonio. If no additional requestors come forward, transfer of control of the human remains to the Native Hawaiian organizations stated in this notice may proceed.

DATES: Lineal descendants or representatives of any Native Hawaiian organization not identified in this notice that wish to request transfer of control of these human remains should submit a written request with information in support of the request to the Center for Archaeological Research at the University of Texas at San Antonio at the address in this notice by December 2, 2013.

ADDRESSES: Cynthia Munoz, Center for Archaeological Research, 1 UTSA Circle, San Antonio, TX 78249, telephone (210) 458–4394.

SUPPLEMENTARY INFORMATION: Notice is here given in accordance with the Native American Graves Protection and Repatriation Act (NAGPRA), 25 U.S.C. 3003, of the completion of an inventory of human remains under the control of the Center for Archaeological Research at the University of Texas at San Antonio. The human remains were removed from an unknown location in Hawaii.

This notice is published as part of the National Park Service's administrative responsibilities under NAGPRA, 25 U.S.C. 3003(d)(3). The determinations in this notice are the sole responsibility of the museum, institution, or Federal agency that has control of the Native American human remains. The National Park Service is not responsible for the determinations in this notice.

Consultation

A detailed assessment of the human remains was made by the Center for Archaeological Research at the University of Texas at San Antonio professional staff in consultation with representatives of the Kia'i Kānāwai Compliance Enforcement Office of Hawaiian Affairs of Oahu, Hawaii.

History and Description of the Remains

Sometime between 1940 and 1960, human remains representing two individuals were removed by an U.S. Air Force airman from an unknown location in Hawaii, likely on the island of Oahu. The airman reportedly found the remains eroding from the sand on the beach and subsequently brought the remains to his home in San Antonio, TX. The human remains consist of two complete skulls, one probably male and one probably female, both adults. After the airman died, his son found the remains and donated them to the Center for Archaeological Research at the University of Texas at San Antonio. Documentation with the remains states the remains were removed from a ''Hawaii hotel site.'' No known individuals were identified. No associated funerary objects are present.

The geographic context suggests that the remains are of Native Hawaiian affiliation. The teeth of both individuals are worn, suggesting a diet containing abrasives, likely associated with archaeological remains. Given the absence of associated objects, it is not possible to ascribe tribal affiliation.

Determinations Made by the Center for Archaeological Research at the University of Texas at San Antonio

Officials of the Center for Archaeological Research at the University of Texas at San Antonio have determined that:

• Pursuant to 25 U.S.C. 3001(9), the human remains described in this notice represent the physical remains of two individuals of Native American ancestry.

• Pursuant to 25 U.S.C. 3001(2), there is a relationship of shared group identity that can be reasonably traced between the Native American human remains and Kia'i Kānāwai Compliance Enforcement Office of Hawaiian Affairs of Oahu, Hawaii

Additional Requestors and Disposition

Lineal descendants or representatives of any Native Hawaiian organization not identified in this notice that wish to request transfer of control of these human remains should submit a written request with information in support of the request to Cynthia Munoz, Center for Archaeological Research, 1 UTSA Circle, San Antonio, TX 78249, telephone (210) 458–4394, by December 2, 2013. After that date, if no additional requestors have come forward, transfer of control of the human remains to Kia'i Kānāwai Compliance Enforcement Office of Hawaiian Affairs of Oahu, Hawaii may proceed.

The Center for Archaeological Research at the University of Texas at San Antonio is responsible for notifying the Kia'i Kānāwai Compliance Enforcement Office of Hawaiian Affairs of Oahu, Hawaii that this notice has been published.

Dated: September 23, 2013.

Sherry Hutt,

Manager, National NAGPRA Program.

[FR Doc. 2013–25971 Filed 10–30–13; 8:45 am]

BILLING CODE 4312–50–P

DEPARTMENT OF THE INTERIOR

National Park Service

[NPS–WASO–NAGPRA–14174; PPWOCRADN0–PCU00RP14.R50000]

Notice of Inventory Completion: U.S. Department of the Interior, National Park Service, Capitol Reef National Park, Torrey, UT

AGENCY: National Park Service, Interior.

ACTION: Notice.

SUMMARY: The U.S. Department of the Interior, National Park Service, Capitol Reef National Park has completed an inventory of human remains, in consultation with the appropriate Indian tribes or Native Hawaiian organizations, and has determined that there is no cultural affiliation between the human remains and any present-day Indian tribes or Native Hawaiian organizations. Representatives of any Indian tribe or Native Hawaiian organization not identified in this notice that wish to request transfer of control of these human remains should submit a written request to Capitol Reef National Park. If no additional requestors come forward, transfer of control of the human remains to the Indian tribes or Native Hawaiian organizations stated in this notice may proceed.

DATES: Representatives of any Indian tribe or Native Hawaiian organization not identified in this notice that wish to request transfer of control of these human remains should submit a written request with information in support of the request to Capitol Reef National Park at the address in this notice by December 2, 2013.

ADDRESSES: Leah McGinnis, Superintendent, Capitol Reef National Park, HC 70 Box 15, Torrey, UT 84775–9602, telephone (435) 425–3791, email *leah_mcginnis@nps.gov.*

SUPPLEMENTARY INFORMATION: Notice is here given in accordance with the Native American Graves Protection and Repatriation Act (NAGPRA), 25 U.S.C. 3003, of the completion of an inventory of human remains under the control of Capitol Reef National Park, Torrey, UT. The human remains were removed from Capitol Reef National Park, Wayne County, UT.

This notice is published as part of the National Park Service's administrative responsibilities under NAGPRA, 25 U.S.C. 3003(d)(3) and 43 CFR 10.11(d). The determinations in this notice are the sole responsibility of the Superintendent, Capitol Reef National Park.

Consultation

A detailed assessment of the human remains was made during a region-wide, multi-park process by Capitol Reef National Park professional staff in consultation with representatives of the Ak Chin Indian Community of the Maricopa (Ak Chin) Indian Reservation, Arizona; Gila River Indian Community of the Gila River Indian Reservation, Arizona; Hualapai Indian Tribe of the Hualapai Indian Reservation, Arizona; Mescalero Apache Tribe of the Mescalero Reservation, New Mexico; Moapa Band of Paiute Indians of the Moapa River Indian Reservation, Nevada; Paiute Indian Tribe of Utah (Cedar Band of Paiutes, Kanosh Band of Paiutes, Koosharem Band of Paiutes, Indian Peaks Band of Paiutes, and Shivwits Band of Paiutes) (formerly Paiute Indian Tribe of Utah (Cedar City Band of Paiutes, Kanosh Band of Paiutes, Koosharem Band of Paiutes, Indian Peaks Band of Paiutes, and Shivwits Band of Paiutes)); Paiute-Shoshone Tribe of the Fallon Reservation and Colony, Nevada; Pueblo of Santa Ana, New Mexico; Pueblo of Santa Clara, New Mexico; Salt River Pima-Maricopa Indian Community of the Salt River Reservation, Arizona; San Carlos Apache Tribe of the San Carlos Reservation, Arizona; San Juan Southern Paiute Tribe of Arizona; Southern Ute Indian Tribe of the Southern Ute Reservation, Colorado; Tohono O'odham Nation of Arizona; Ute Indian Tribe of the Uintah & Ouray Reservation, Utah; Ute Mountain Tribe of the Ute Mountain Reservation, Colorado, New Mexico & Utah; and Utu Utu Gwaitu Paiute Tribe of the Benton Paiute Reservation, California (hereafter referred to as ''The Consulted Tribes'').

The following tribes were invited to consult but did not participate: Apache Tribe of Oklahoma; Arapaho Tribe of the Wind River Reservation, Wyoming; Big Pine Paiute Tribe of the Owens Valley (previously listed as the Big Pine Band of Owens Valley Paiute Shoshone Indians of the Big Pine Reservation, California); Bishop Paiute Tribe (previously listed as the Paiute-Shoshone Indians of the Bishop Community of the Bishop Colony, California); Bridgeport Indian Colony (previously listed as the Bridgeport Paiute Indian Colony of California); Burns Paiute Tribe (previously listed as the Burns Paiute Tribe of the Burns Paiute Indian Colony of Oregon); Cheyenne and Arapaho Tribes, Oklahoma (previously listed as the Cheyenne-Arapaho Tribes of Oklahoma); Comanche Nation, Oklahoma; Fort Independence Indian Community of Paiute Indians of the Fort Independence Reservation, California; Fort McDermitt Paiute and Shoshone Tribes of the Fort McDermitt Indian Reservation, Nevada and Oregon; Fort McDowell Yavapai Nation, Arizona; Fort Sill Apache Tribe of Oklahoma; Hopi Tribe of Arizona; Jicarilla Apache Nation, New Mexico; Kaibab Band of Paiute Indians of the Kaibab Indian Reservation, Arizona; Kewa Pueblo, New Mexico (previously listed as the Pueblo of Santo Domingo); Kiowa Indian Tribe of Oklahoma; Las Vegas Tribe of Paiute Indians of the Las Vegas Indian Colony, Nevada; Lone Pine

Paiute-Shoshone Tribe (previously listed as the Paiute-Shoshone Indians of the Lone Pine Community of the Lone Pine Reservation, California); Lovelock Paiute Tribe of the Lovelock Indian Colony, Nevada; Navajo Nation, Arizona, New Mexico & Utah; Ohkay Owingeh, New Mexico (previously listed as the Pueblo of San Juan); Pueblo of Acoma, New Mexico; Pueblo of Cochiti, New Mexico; Pueblo of Isleta, New Mexico; Pueblo of Jemez, New Mexico; Pueblo of Laguna, New Mexico; Pueblo of Nambe, New Mexico; Pueblo of Picuris, New Mexico; Pueblo of Pojoaque, New Mexico; Pueblo of San Felipe, New Mexico; Pueblo of San Ildefonso, New Mexico; Pueblo of Sandia, New Mexico; Pueblo of Taos, New Mexico; Pueblo of Tesuque, New Mexico; Pueblo of Zia, New Mexico; Pyramid Lake Paiute Tribe of the Pyramid Lake Reservation, Nevada; Shoshone-Paiute Tribes of the Duck Valley Reservation, Nevada; Summit Lake Paiute Tribe of Nevada; Tonto Apache Tribe of Arizona; Walker River Paiute Tribe of the Walker River Reservation, Nevada; White Mountain Apache Tribe of the Fort Apache Reservation, Arizona; Yavapai-Apache Nation of the Camp Verde Indian Reservation, Arizona; Yavapai-Prescott Indian Tribe (previously listed as the Yavapai-Prescott Tribe of the Yavapai Reservation, Arizona); Yerington Paiute Tribe of the Yerington Colony & Campbell Ranch, Nevada; and Zuni Tribe of the Zuni Reservation, New Mexico (hereafter referred to as ''The Invited Tribes'').

History and Description of the Remains

At an unknown date, human remains representing, at minimum, one individual were removed from an unknown location in Wayne County, UT. The human remains were found in Capitol Reef National Park's collections and so were likely removed from within the boundaries of Capitol Reef National Park. No known individuals were identified. No associated funerary objects are present.

Determinations Made by Capitol Reef National Park

Officials of Capitol Reef National Park have determined that:

- Pursuant to 25 U.S.C. 3001(9), the human remains described in this notice are Native American based on osteological analysis.
- Pursuant to 25 U.S.C. 3001(9), the human remains described in this notice represent the physical remains of one individual of Native American ancestry.
- Pursuant to 25 U.S.C. 3001(2), a relationship of shared group identity cannot be reasonably traced between the Native American human remains and any present-day Indian tribe.
- According to final judgments of the Indian Claims Commission or the Court of Federal Claims, the land from which the Native American human remains were removed is the aboriginal land of the Kaibab Band of Paiute Indians of the Kaibab Indian Reservation, Arizona; Las Vegas Tribe of Paiute Indians of the Las Vegas Indian Colony, Nevada; Moapa Band of Paiute Indians of the Moapa River Indian Reservation, Nevada; Paiute Indian Tribe of Utah (Cedar Band of Paiutes, Kanosh Band of Paiutes, Koosharem Band of Paiutes, Indian Peaks Band of Paiutes, and Shivwits Band of Paiutes) (formerly Paiute Indian Tribe of Utah (Cedar City Band of Paiutes, Kanosh Band of Paiutes, Koosharem Band of Paiutes, Indian Peaks Band of Paiutes, and Shivwits Band of Paiutes)); and San Juan Southern Paiute Tribe of Arizona.
- Treaties, Acts of Congress, or Executive Orders, indicate that the land from which the Native American human remains were removed is the aboriginal land of the Big Pine Paiute Tribe of the Owens Valley (previously listed as the Big Pine Band of Owens Valley Paiute Shoshone Indians of the Big Pine Reservation, California); Bishop Paiute Tribe (previously listed as the Paiute-Shoshone Indians of the Bishop Community of the Bishop Colony, California); Bridgeport Indian Colony (previously listed as the Bridgeport Paiute Indian Colony of California); Burns Paiute Tribe (previously listed as the Burns Paiute Tribe of the Burns Paiute Indian Colony of Oregon); Fort Independence Indian Community of Paiute Indians of the Fort Independence Reservation, California; Fort McDermitt Paiute and Shoshone Tribes of the Fort McDermitt Indian Reservation, Nevada and Oregon; Kaibab Band of Paiute Indians of the Kaibab Indian Reservation, Arizona; Las Vegas Tribe of Paiute Indians of the Las Vegas Indian Colony, Nevada; Lone Pine Paiute-Shoshone Tribe (previously listed as the Paiute-Shoshone Indians of the Lone Pine Community of the Lone Pine Reservation, California); Lovelock Paiute Tribe of the Lovelock Indian Colony, Nevada; Moapa Band of Paiute Indians of the Moapa River Indian Reservation, Nevada; Paiute Indian Tribe of Utah (Cedar Band of Paiutes, Kanosh Band of Paiutes, Koosharem Band of Paiutes, Indian Peaks Band of Paiutes, and Shivwits Band of Paiutes) (formerly Paiute Indian Tribe of Utah (Cedar City Band of Paiutes, Kanosh Band of Paiutes, Koosharem Band of Paiutes, Indian Peaks Band of Paiutes, and Shivwits Band of Paiutes)); Paiute-Shoshone Tribe of the Fallon Reservation and Colony, Nevada; Pyramid Lake Paiute Tribe of the Pyramid Lake Reservation, Nevada; San Juan Southern Paiute Tribe of Arizona; Shoshone-Paiute Tribes of the Duck Valley Reservation, Nevada; Summit Lake Paiute Tribe of Nevada; Ute Indian Tribe of the Uintah & Ouray Reservation, Utah; Utu Utu Gwaitu Paiute Tribe of the Benton Paiute Reservation, California; Walker River Paiute Tribe of the Walker River Reservation, Nevada; and Yerington Paiute Tribe of the Yerington Colony & Campbell Ranch, Nevada.
- Other credible lines of evidence, including relevant and authoritative governmental determinations and information gathered during government-to-government consultation from subject matter experts, indicate that the land from which the Native American human remains were removed is the aboriginal land of the Pueblo of Santa Ana, New Mexico; Pueblo of Santa Clara, New Mexico; Southern Ute Indian Tribe of the Southern Ute Reservation, Colorado; and Ute Mountain Tribe of the Ute Mountain Reservation, Colorado, New Mexico & Utah.
- Pursuant to 43 CFR 10.11(c)(1), the disposition of the human remains may be to the Big Pine Paiute Tribe of the Owens Valley (previously listed as the Big Pine Band of Owens Valley Paiute Shoshone Indians of the Big Pine Reservation, California); Bishop Paiute Tribe (previously listed as the Paiute-Shoshone Indians of the Bishop Community of the Bishop Colony, California); Bridgeport Indian Colony (previously listed as the Bridgeport Paiute Indian Colony of California); Burns Paiute Tribe (previously listed as the Burns Paiute Tribe of the Burns Paiute Indian Colony of Oregon); Fort Independence Indian Community of Paiute Indians of the Fort Independence Reservation, California; Fort McDermitt Paiute and Shoshone Tribes of the Fort McDermitt Indian Reservation, Nevada and Oregon; Kaibab Band of Paiute Indians of the Kaibab Indian Reservation, Arizona; Las Vegas Tribe of Paiute Indians of the Las Vegas Indian Colony, Nevada; Lone Pine Paiute-Shoshone Tribe (previously listed as the Paiute-Shoshone Indians of the Lone Pine Community of the Lone Pine Reservation, California); Lovelock Paiute Tribe of the Lovelock Indian Colony, Nevada; Moapa Band of Paiute Indians of the Moapa River Indian Reservation, Nevada; Paiute Indian Tribe of Utah (Cedar Band of Paiutes, Kanosh Band of Paiutes, Koosharem

Band of Paiutes, Indian Peaks Band of Paiutes, and Shivwits Band of Paiutes) (formerly Paiute Indian Tribe of Utah (Cedar City Band of Paiutes, Kanosh Band of Paiutes, Koosharem Band of Paiutes, Indian Peaks Band of Paiutes, and Shivwits Band of Paiutes)); Paiute-Shoshone Tribe of the Fallon Reservation and Colony, Nevada; Pueblo of Santa Ana, New Mexico; Pueblo of Santa Clara, New Mexico; Pyramid Lake Paiute Tribe of the Pyramid Lake Reservation, Nevada; San Juan Southern Paiute Tribe of Arizona; Shoshone-Paiute Tribes of the Duck Valley Reservation, Nevada; Southern Ute Indian Tribe of the Southern Ute Reservation, Colorado; Summit Lake Paiute Tribe of Nevada; Ute Indian Tribe of the Uintah & Ouray Reservation, Utah; Ute Mountain Tribe of the Ute Mountain Reservation, Colorado, New Mexico & Utah; Utu Utu Gwaitu Paiute Tribe of the Benton Paiute Reservation, California; Walker River Paiute Tribe of the Walker River Reservation, Nevada; and Yerington Paiute Tribe of the Yerington Colony & Campbell Ranch, Nevada.

Additional Requestors and Disposition

Representatives of any Indian tribe or Native Hawaiian organization not identified in this notice that wish to request transfer of control of these human remains should submit a written request with information in support of the request to Leah McGinnis, Superintendent, Capitol Reef National Park, HC 70 Box 15, Torrey, UT 84775–9602, telephone (435) 425–3791, email *leah_mcginnis@nps.gov,* by December 2, 2013. After that date, if no additional requestors have come forward, transfer of control of the human remains to the Big Pine Paiute Tribe of the Owens Valley (previously listed as the Big Pine Band of Owens Valley Paiute Shoshone Indians of the Big Pine Reservation, California); Bishop Paiute Tribe (previously listed as the Paiute-Shoshone Indians of the Bishop Community of the Bishop Colony, California); Bridgeport Indian Colony (previously listed as the Bridgeport Paiute Indian Colony of California); Burns Paiute Tribe (previously listed as the Burns Paiute Tribe of the Burns Paiute Indian Colony of Oregon); Fort Independence Indian Community of Paiute Indians of the Fort Independence Reservation, California; Fort McDermitt Paiute and Shoshone Tribes of the Fort McDermitt Indian Reservation, Nevada and Oregon; Kaibab Band of Paiute Indians of the Kaibab Indian Reservation, Arizona; Las Vegas Tribe of Paiute Indians of the Las Vegas Indian Colony, Nevada; Lone Pine Paiute-Shoshone Tribe (previously listed as the Paiute-Shoshone Indians of the Lone Pine Community of the Lone Pine Reservation, California); Lovelock Paiute Tribe of the Lovelock Indian Colony, Nevada; Moapa Band of Paiute Indians of the Moapa River Indian Reservation, Nevada; Paiute Indian Tribe of Utah (Cedar Band of Paiutes, Kanosh Band of Paiutes, Koosharem Band of Paiutes, Indian Peaks Band of Paiutes, and Shivwits Band of Paiutes) (formerly Paiute Indian Tribe of Utah (Cedar City Band of Paiutes, Kanosh Band of Paiutes, Koosharem Band of Paiutes, Indian Peaks Band of Paiutes, and Shivwits Band of Paiutes)); Paiute-Shoshone Tribe of the Fallon Reservation and Colony, Nevada; Pueblo of Santa Ana, New Mexico; Pueblo of Santa Clara, New Mexico; Pyramid Lake Paiute Tribe of the Pyramid Lake Reservation, Nevada; San Juan Southern Paiute Tribe of Arizona; Shoshone-Paiute Tribes of the Duck Valley Reservation, Nevada; Southern Ute Indian Tribe of the Southern Ute Reservation, Colorado; Summit Lake Paiute Tribe of Nevada; Ute Indian Tribe of the Uintah & Ouray Reservation, Utah; Ute Mountain Tribe of the Ute Mountain Reservation, Colorado, New Mexico & Utah; Utu Utu Gwaitu Paiute Tribe of the Benton Paiute Reservation, California; Walker River Paiute Tribe of the Walker River Reservation, Nevada; and Yerington Paiute Tribe of the Yerington Colony & Campbell Ranch, Nevada may proceed.

Capitol Reef National Park is responsible for notifying The Consulted Tribes and The Invited Tribes that this notice has been published.

Dated: September 23, 2013.

Sherry Hutt,

Manager, National NAGPRA Program.

[FR Doc. 2013–25988 Filed 10–30–13; 8:45 am]

BILLING CODE 4312–50–P

DEPARTMENT OF THE INTERIOR

National Park Service

[NPS–WASO–NAGPRA–14037; PPWOCRADN0–PCU00RP14.R50000]

Notice of Inventory Completion: University of Michigan, Ann Arbor, MI

AGENCY: National Park Service, Interior.

ACTION: Notice.

SUMMARY: The University of Michigan has completed an inventory of human remains and associated funerary objects, in consultation with the appropriate Indian tribes or Native Hawaiian organizations, and has determined that there is no cultural affiliation between the human remains and associated funerary objects and any present-day Indian tribes or Native Hawaiian organizations. Representatives of any Indian tribe or Native Hawaiian organization not identified in this notice that wish to request transfer of control of these human remains and associated funerary objects should submit a written request to the University of Michigan. If no additional requestors come forward, transfer of control of the human remains and associated funerary objects to the Indian tribes or Native Hawaiian organizations stated in this notice may proceed.

DATES: Representatives of any Indian tribe or Native Hawaiian organization not identified in this notice that wish to request transfer of control of these human remains and associated funerary objects should submit a written request with information in support of the request to the University of Michigan at the address in this notice by December 2, 2013.

ADDRESSES: Dr. Ben Secunda, NAGPRA Project Manager, University of Michigan, Office of the Vice President for Research, 4080 Fleming Building, 503 Thompson St., Ann Arbor, MI 48109–1340, telephone (734) 647–9085, email *bsecunda@umich.edu.*

SUPPLEMENTARY INFORMATION: Notice is here given in accordance with the Native American Graves Protection and Repatriation Act (NAGPRA), 25 U.S.C. 3003, of the completion of an inventory of human remains and associated funerary objects under the control of the University of Michigan, Ann Arbor, MI. The human remains and associated funerary objects were removed from Barry, Branch, Calhoun, Ionia, and Kent Counties, MI.

This notice is published as part of the National Park Service's administrative responsibilities under NAGPRA, 25 U.S.C. 3003(d)(3) and 43 CFR 10.11(d). The determinations in this notice are the sole responsibility of the museum, institution, or Federal agency that has control of the Native American human remains and associated funerary objects. The National Park Service is not responsible for the determinations in this notice.

Consultation

A detailed assessment of the human remains and associated funerary objects was made by the University of Michigan Museum of Anthropology professional staff in consultation with representatives of the Bay Mills Indian Community, Michigan; Chippewa-Cree Indians of the Rocky Boy's Reservation, Montana; Grand Traverse Band of

Ottawa and Chippewa Indians, Michigan; Hannahville Indian Community, Michigan; Keweenaw Bay Indian Community, Michigan; Lac Vieux Desert Band of Lake Superior Chippewa Indians of Michigan; Little River Band of Ottawa Indians, Michigan; Little Traverse Bay Bands of Odawa Indians, Michigan; Match-e-be-nash-she-wish Band of Pottawatomi Indians of Michigan; Nottawaseppi Huron Band of the Potawatomi, Michigan (previously listed as the Huron Potawatomi, Inc.); Pokagon Band of Potawatomi Indians, Michigan and Indiana; Saginaw Chippewa Indian Tribe of Michigan; and the Sault Ste. Marie Tribe of Chippewa Indians, Michigan.

Additional requests for consultation were sent to the Bad River Band of the Lake Superior Tribe of Chippewa Indians of the Bad River Reservation, Wisconsin; Bois Forte Band (Nett Lake) of the Minnesota Chippewa Tribe, Minnesota; Citizen Potawatomi Nation, Oklahoma; Fond du Lac Band of the Minnesota Chippewa Tribe, Minnesota; Forest County Potawatomi Community, Wisconsin; Grand Portage Band of the Minnesota Chippewa Tribe, Minnesota; Lac Courte Oreilles Band of Lake Superior Chippewa Indians of Wisconsin; Lac du Flambeau Band of Lake Superior Chippewa Indians of the Lac du Flambeau Reservation of Wisconsin; Leech Lake Band of the Minnesota Chippewa Tribe, Minnesota; Mille Lacs Band of the Minnesota Chippewa Tribe, Minnesota; Ottawa Tribe of Oklahoma; Prairie Band Potawatomi Nation (previously listed as the Prairie Band of Potawatomi Nation, Kansas); Quechan Tribe of the Fort Yuma Indian Reservation, California & Arizona; Red Cliff Band of Lake Superior Chippewa Indians of Wisconsin; Red Lake Band of Chippewa Indians, Minnesota; Sokaogon Chippewa Community, Wisconsin; St. Croix Chippewa Indians of Wisconsin; Turtle Mountain Band of Chippewa Indians of North Dakota; and the White Earth Band of the Minnesota Chippewa Tribe, Minnesota.

Hereafter, all tribes listed in this section are referred to as ''The Tribes.''

History and Description of the Remains

In 1958, human remains representing, at minimum, 3 individuals were removed from the Middleville site (20BA26) in Barry County, MI. A landowner unearthed human remains while digging a gas line trench on his property. He contacted D.B. Cochran of the University of Michigan Museum of Anthropology (UMMA) who collected the remains of one cremated adult, one adolescent, and one child from the fill soil of the trench. Cochran also surveyed the general area, including both sides of the North Branch Thornapple River, for additional burials or artifacts, but found none. No date or time period for the human remains could be established. No known individuals were identified. No associated funerary objects are present.

In the 1930s, human remains representing, at minimum, 1 individual were removed from the Yankee Springs site in Barry County, MI. Workers unearthed the remains of one adult male during gravel pit operations. An employee of the State of Michigan working at the Yankee Springs Recreational Area collected the remains. The skull was eventually donated to the UMMA in the 1960s. No date or time period for the human remains could be established. No known individuals were identified. No associated funerary objects are present.

In either 1905 or 1906, human remains representing, at minimum, 2 individuals were removed from the Burch site (20BR1) in Branch County, MI. A landowner found and collected an unknown number of human remains and associated funerary objects while digging on his farm. On an unknown date, he transferred one cranium and three long bones from a young adult female to a Professor of Archaeology at Ohio State University and member of the Ohio Historical Society who subsequently donated these remains to the UMMA in 1955. Additionally, the landowner's nephew transferred one cranium from an adult male, along with an unknown number of the associated funerary objects, to a local collector who subsequently donated the cranium and 148 associated funerary objects to the UMMA in 1970. The human remains likely date to the Late Archaic-Early Woodland Period (2550–300 B.C.) and are likely associated with the Glacial Kame cultural complex as inferred from the presence of sandal-sole gorgets made from *Busycon* shell. No known individuals were identified. The 148 associated funerary objects present are 17 copper beads, 114 shell disk beads, 1 copper awl, 3 round shell gorgets perforated at the center, 6 large sandal-sole gorgets with perforations, 2 curved triangular shell gorgets with perforations, 4 oblong shell gorgets, and 1 copper gorget.

In 1924, human remains representing, at minimum, 1 individual were removed from the Enos Short's Farm site (20CA102) in Calhoun County, MI. A farmer collected the remains of one young adult female while removing gravel on farmland near Battle Creek, MI. The individual was buried with her head toward the north and facing to the east. The farmer donated the human remains to the UMMA in September of 1924. No date or time period for the human remains could be established. No known individuals were identified. No associated funerary objects are present.

On an unknown date prior to 1975, human remains representing, at a minimum, 1 adult individual were removed from the Stony Creek site (20IA44) in Ionia County, MI. A local resident collected the human remains, along with an unspecified number of greywacke and quartzite artifacts of unknown type, from a location near Stony Creek. The artifacts were not donated to the UMMA. The artifacts are typical of the Late Archaic Satchell Complex and, along with the presence of copper salt residues on the human remains, help date the human remains to the Archaic Period. No known individuals were identified. No associated funerary objects are present.

On an unknown date, human remains representing, at minimum, 1 individual were removed from the Kent County site in Kent County, MI. Amateur archeologists collected one mandible from a location along the Grand River near the Norton Mounds. It is unclear when the human remains were actually donated to the UMMA, but museum records indicate that the mandible was placed in the teaching collection in 1967. Green staining was noted on the mandible. The human remains date to the Pre-Contact Period based on the presence of numerous documented sites from this period in the same area. No known individuals were identified. No associated funerary objects are present.

In July 1930, human remains representing, at minimum, 9 individuals were removed from the West Side of Flat River site (20KT43) in Kent County, MI. A local resident collected the remains of eight adults and one child, and donated them to the UMMA on December 29, 1930. The site has multiple components and may have burials that date to both the Pre-Contact and Post-Contact Periods. Historical records indicate that the area where the burials were discovered was known to contain a mound from the Pre-Contact Period as well as a Native American burial ground from the Post-Contact Period likely associated with the Odawa leader Keweyooshcum, who had a village located in the vicinity. No date or time period for the human remains could be established. No individuals were identified. No associated funerary objects are present.

Determinations Made by the University of Michigan Museum of Anthropology

Officials of the University of Michigan Museum of Anthropology have determined that:

- Pursuant to 25 U.S.C. 3001(9), the human remains described in this notice are Native American based on cranial morphology, dental traits, accession documentation, and archeological context.
- Pursuant to 25 U.S.C. 3001(9), the human remains described in this notice represent the physical remains of 18 individuals of Native American ancestry.
- Pursuant to 25 U.S.C. 3001(3)(A), the 148 objects described in this notice are reasonably believed to have been placed with or near individual human remains at the time of death or later as part of the death rite or ceremony.
- Pursuant to 25 U.S.C. 3001(2), a relationship of shared group identity cannot be reasonably traced between the Native American human remains and associated funerary objects and any present-day Indian tribe.
- According to final judgments of the Indian Claims Commission or the Court of Federal Claims, the land from which the Native American human remains and associated funerary objects were removed is the aboriginal land of The Tribes.
- Treaties, Acts of Congress, or Executive Orders, indicate that the land from which the Native American human remains and associated funerary objects were removed is the aboriginal land of The Tribes.
- Pursuant to 43 CFR 10.11(c)(1), the disposition of the human remains and associated funerary objects may be to The Tribes.

Additional Requestors and Disposition

Representatives of any Indian tribe or Native Hawaiian organization not identified in this notice that wish to request transfer of control of these human remains and associated funerary objects should submit a written request with information in support of the request to Dr. Ben Secunda, NAGPRA Project Manager, University of Michigan, Office of the Vice President for Research, 4080 Fleming Building, 503 Thompson St., Ann Arbor, MI 48109–1340, telephone (734) 647–9085, email *bsecunda@umich.edu,* by December 2, 2013. After that date, if no additional requestors have come forward, transfer of control of the human remains and associated funerary objects to The Tribes may proceed.

The University of Michigan is responsible for notifying The Tribes that this notice has been published.

Dated: September 16, 2013.

Sherry Hutt,

Manager, National NAGPRA Program.

[FR Doc. 2013–25997 Filed 10–30–13; 8:45 am]

BILLING CODE 4312–50–P

DEPARTMENT OF THE INTERIOR

National Park Service

[NPS–WASO–NAGPRA–14039; PPWOCRADN0–PCU00RP14.R50000]

Notice of Inventory Completion: University of Michigan, Ann Arbor, MI

AGENCY: National Park Service, Interior.

ACTION: Notice.

SUMMARY: The University of Michigan has completed an inventory of human remains, in consultation with the appropriate Indian tribes or Native Hawaiian organizations, and has determined that there is no cultural affiliation between the human remains and any present-day Indian tribes or Native Hawaiian organizations. Representatives of any Indian tribe or Native Hawaiian organization not identified in this notice that wish to request transfer of control of these human remains should submit a written request to the University of Michigan. If no additional requestors come forward, transfer of control of the human remains to the Indian tribes or Native Hawaiian organizations stated in this notice may proceed.

DATES: Representatives of any Indian tribe or Native Hawaiian organization not identified in this notice that wish to request transfer of control of these human remains should submit a written request with information in support of the request to the University of Michigan at the address in this notice by December 2, 2013.

ADDRESSES: Dr. Ben Secunda, NAGPRA Project Manager, University of Michigan, Office of the Vice President for Research, 4080 Fleming Building, 503 Thompson St., Ann Arbor, MI 48109–1340, telephone (734) 647–9085, email *bsecunda@umich.edu.*

SUPPLEMENTARY INFORMATION: Notice is here given in accordance with the Native American Graves Protection and Repatriation Act (NAGPRA), 25 U.S.C. 3003, of the completion of an inventory of human remains under the control of the University of Michigan, Ann Arbor, MI. The human remains were removed from Clinton, Gladwin, Gratiot Counties, MI.

This notice is published as part of the National Park Service's administrative responsibilities under NAGPRA, 25 U.S.C. 3003(d)(3) and 43 CFR 10.11(d). The determinations in this notice are the sole responsibility of the museum, institution, or Federal agency that has control of the Native American human remains. The National Park Service is not responsible for the determinations in this notice.

Consultation

A detailed assessment of the human remains was made by the University of Michigan Museum of Anthropology professional staff in consultation with representatives of the Bay Mills Indian Community, Michigan; Chippewa-Cree Indians of the Rocky Boy's Reservation, Montana; Grand Traverse Band of Ottawa and Chippewa Indians, Michigan; Keweenaw Bay Indian Community, Michigan; Lac Vieux Desert Band of Lake Superior Chippewa Indians of Michigan; Saginaw Chippewa Indian Tribe of Michigan; and the Sault Ste. Marie Tribe of Chippewa Indians, Michigan.

Additional requests for consultation were sent to the Bad River Band of the Lake Superior Tribe of Chippewa Indians of the Bad River Reservation, Wisconsin; Bois Forte Band (Nett Lake) of the Minnesota Chippewa Tribe, Minnesota; Fond du Lac Band of the Minnesota Chippewa Tribe, Minnesota; Grand Portage Band of the Minnesota Chippewa Tribe, Minnesota; Lac Courte Oreilles Band of Lake Superior Chippewa Indians of Wisconsin; Lac du Flambeau Band of Lake Superior Chippewa Indians of the Lac du Flambeau Reservation of Wisconsin; Leech Lake Band of the Minnesota Chippewa Tribe, Minnesota; Mille Lacs Band of the Minnesota Chippewa Tribe, Minnesota; Red Cliff Band of Lake Superior Chippewa Indians of Wisconsin; Red Lake Band of Chippewa Indians, Minnesota; Sokaogon Chippewa Community, Wisconsin; St. Croix Chippewa Indians of Wisconsin; Turtle Mountain Band of Chippewa Indians of North Dakota; and the White Earth Band of the Minnesota Chippewa Tribe, Minnesota.

Hereafter, all tribes listed in this section are referred to as ''The Tribes.''

History and Description of the Remains

In 1954, human remains representing, at minimum, 1 individual were removed from the GL–1997 site in Clinton County, MI. The Clinton County Sheriff's Department collected the remains of one adult male from a location in Essex Township, MI, and sent them to the University of Michigan Museum of Anthropology (UMMA) for identification. The human remains were identified as Native American and

donated to the UMMA on October 16, 1954. No date or time period for the human remains could be established. No known individuals were identified. No associated funerary objects are present.

In 1951, human remains representing, at minimum, 1 individual were removed from the Virgil Olson site (20CL30) in Clinton County, MI. The remains of one adult were found during gravel pit operations on private land, and the Clinton County Sheriff's Department was contacted to investigate. The Sherriff's Department determined the human remains were Native American and donated them to the UMMA. No date or time period for the human remains could be established. No known individuals were identified. No associated funerary objects are present.

On an unknown date in the 1920s, human remains representing, at minimum, 1 individual were removed from the Gladwin site in Gladwin County, MI. The remains of an adult female were removed from a mound near Gladwin, MI, and donated to the UMMA. No date or time period for the human remains could be established. No known individuals were identified. No associated funerary objects are present.

On an unknown date prior to 1924, human remains representing, at minimum, 2 individuals were removed from the St. Louis site in Gratiot County, MI. The remains of one adult female and one juvenile were found in the UMMA's collections in 1924 with a note that reads ''near St. Louis, Gratiot County.'' No date or time period for the human remains could be established. No known individuals were identified. No associated funerary objects are present.

On an unknown date prior to 1925, human remains representing, at minimum, 2 individuals were removed from the Gramon Mound site (20GR5) in Gratiot County, MI. A local resident reportedly found the remains of eight individuals in a mound located near the Montcalm and Gratiot County line. Only one cranium and one mandible were donated to the UMMA. The remains are from two individuals. The cranium is from a middle-aged adult male and the mandible is from a younger adult male. The cranium has an irregular-cut hole on the left parietal made post-mortem, but the cut hole differs from the type of post-mortem cutting typically associated with the practice of plaque removal. It was reported that all of the crania found in the mound showed evidence of post-mortem drilling. The human remains date to the Late Woodland Period based on mortuary treatment. No known individuals were identified. No associated funerary objects are present.

Determinations Made by the University of Michigan Museum of Anthropology

Officials of the University of Michigan Museum of Anthropology have determined that:

- Pursuant to 25 U.S.C. 3001(9), the human remains described in this notice are Native American based on cranial morphology, dental traits, accession documentation, and archeological context.
- Pursuant to 25 U.S.C. 3001(9), the human remains described in this notice represent the physical remains of 7 individuals of Native American ancestry.
- Pursuant to 25 U.S.C. 3001(2), a relationship of shared group identity cannot be reasonably traced between the Native American human remains and any present-day Indian tribe.
- According to final judgments of the Indian Claims Commission or the Court of Federal Claims, the land from which the Native American human remains were removed is the aboriginal land of the Saginaw Chippewa Indian Tribe of Michigan.
- Treaties, Acts of Congress, or Executive Orders, indicate that the land from which the Native American human remains were removed is the aboriginal land of The Tribes.
- Pursuant to 43 CFR 10.11(c)(1), the disposition of the human remains objects may be to The Tribes.

Additional Requestors and Disposition

Representatives of any Indian tribe or Native Hawaiian organization not identified in this notice that wish to request transfer of control of these human remains should submit a written request with information in support of the request to Dr. Ben Secunda, NAGPRA Project Manager, University of Michigan, Office of the Vice President for Research, 4080 Fleming Building, 503 Thompson St., Ann Arbor, MI 48109–1340, telephone (734) 647–9085, email *bsecunda@umich.edu*, by December 2, 2013. After that date, if no additional requestors have come forward, transfer of control of the human remains to The Tribes may proceed.

The University of Michigan is responsible for notifying The Tribes that this notice has been published.

Dated: September 16, 2013.

Sherry Hutt,

Manager, National NAGPRA Program.

[FR Doc. 2013–25986 Filed 10–30–13; 8:45 am]

BILLING CODE 4312–50–P

DEPARTMENT OF THE INTERIOR

National Park Service

[NPS–WASO–NAGPRA–14041; PPWOCRADN0–PCU00RP14.R50000]

Notice of Inventory Completion: University of Michigan, Ann Arbor, MI

AGENCY: National Park Service, Interior.

ACTION: Notice.

SUMMARY: The University of Michigan has completed an inventory of human remains and associated funerary objects, in consultation with the appropriate Indian tribes or Native Hawaiian organizations, and has determined that there is no cultural affiliation between the human remains and associated funerary objects and any present-day Indian tribes or Native Hawaiian organizations. Representatives of any Indian tribe or Native Hawaiian organization not identified in this notice that wish to request transfer of control of these human remains and associated funerary objects should submit a written request to the University of Michigan. If no additional requestors come forward, transfer of control of the human remains and associated funerary objects to the Indian tribes or Native Hawaiian organizations stated in this notice may proceed.

DATES: Representatives of any Indian tribe or Native Hawaiian organization not identified in this notice that wish to request transfer of control of these human remains and associated funerary objects should submit a written request with information in support of the request to the University of Michigan at the address in this notice by December 2, 2013.

ADDRESSES: Dr. Ben Secunda, NAGPRA Project Manager, University of Michigan, Office of the Vice President for Research, 4080 Fleming Building, 503 Thompson St., Ann Arbor, MI 48109–1340, telephone (734) 647–9085, email *bsecunda@umich.edu.*

SUPPLEMENTARY INFORMATION: Notice is here given in accordance with the Native American Graves Protection and Repatriation Act (NAGPRA), 25 U.S.C. 3003, of the completion of an inventory of human remains and associated funerary objects under the control of the University of Michigan, Ann Arbor, MI. The human remains and associated funerary objects were removed from Berrien County, MI.

This notice is published as part of the National Park Service's administrative responsibilities under NAGPRA, 25 U.S.C. 3003(d)(3) and 43 CFR 10.11(d). The determinations in this notice are

the sole responsibility of the museum, institution, or Federal agency that has control of the Native American human remains and associated funerary objects. The National Park Service is not responsible for the determinations in this notice.

Consultation

A detailed assessment of the human remains and associated funerary objects was made by the University of Michigan Museum of Anthropology professional staff in consultation with representatives of the Bay Mills Indian Community, Michigan; Chippewa-Cree Indians of the Rocky Boy's Reservation, Montana; Grand Traverse Band of Ottawa and Chippewa Indians, Michigan; Hannahville Indian Community, Michigan; Keweenaw Bay Indian Community, Michigan; Lac Vieux Desert Band of Lake Superior Chippewa Indians of Michigan; Little River Band of Ottawa Indians, Michigan; Little Traverse Bay Bands of Odawa Indians, Michigan; Match-e-be-nash-she-wish Band of Pottawatomi Indians of Michigan; Nottawaseppi Huron Band of the Potawatomi, Michigan (previously listed as the Huron Potawatomi, Inc.); Pokagon Band of Potawatomi Indians, Michigan and Indiana; Saginaw Chippewa Indian Tribe of Michigan; and the Sault Ste. Marie Tribe of Chippewa Indians, Michigan.

Additional requests for consultation were sent to the Bad River Band of the Lake Superior Tribe of Chippewa Indians of the Bad River Reservation, Wisconsin; Bois Forte Band (Nett Lake) of the Minnesota Chippewa Tribe, Minnesota; Citizen Potawatomi Nation, Oklahoma; Fond du Lac Band of the Minnesota Chippewa Tribe, Minnesota; Forest County Potawatomi Community, Wisconsin; Grand Portage Band of the Minnesota Chippewa Tribe, Minnesota; Kickapoo Traditional Tribe of Texas; Kickapoo Tribe of Indians of the Kickapoo Reservation in Kansas; Kickapoo Tribe of Oklahoma; Lac Courte Oreilles Band of Lake Superior Chippewa Indians of Wisconsin; Lac du Flambeau Band of Lake Superior Chippewa Indians of the Lac du Flambeau Reservation of Wisconsin; Leech Lake Band of the Minnesota Chippewa Tribe, Minnesota; Miami Tribe of Oklahoma; Mille Lacs Band of the Minnesota Chippewa Tribe, Minnesota; Ottawa Tribe of Oklahoma; Peoria Tribe of Indians of Oklahoma; Prairie Band Potawatomi Nation (previously listed as the Prairie Band of Potawatomi Nation, Kansas); Quechan Tribe of the Fort Yuma Indian Reservation, California & Arizona; Red Cliff Band of Lake Superior Chippewa Indians of Wisconsin; Red Lake Band of Chippewa Indians, Minnesota; Sac & Fox Nation of Missouri in Kansas and Nebraska; Sac & Fox Nation, Oklahoma; Sac & Fox Tribe of the Mississippi in Iowa; Sokaogon Chippewa Community, Wisconsin; St. Croix Chippewa Indians of Wisconsin; Turtle Mountain Band of Chippewa Indians of North Dakota; and the White Earth Band of the Minnesota Chippewa Tribe, Minnesota.

Hereafter, all tribes listed in this section are referred to as ''The Tribes.''

History and Description of the Remains

In 1958, human remains representing, at minimum, 1 individual, were removed from the Kimmel site (20BE24) in Berrien County, MI. A landowner was constructing a basement and spreading displaced dirt in his nearby orchard when he discovered that he had unearthed human remains. He contacted amateur archeologists who collected the remains of one adult and an unspecified number of associated funerary objects from out of the displaced dirt. The individual was reportedly buried while lying in an extended position, with a copper gorget and copper beads around the neck, and a copper object lying over the left side of the chest. The human remains and 40 associated funerary objects from the site were donated to the University of Michigan Museum of Anthropology (UMMA). The human remains date to the Late Archaic-to-Early Woodland Periods (900–400 B.C.) based on diagnostic artifacts. No known individuals were identified. The 40 associated funerary objects present are 1 lot of unidentified fibers, 1 lot of animal hide (with copper inclusions adhering to material), 1 lot hide cord (with visible braiding), 33 copper tubular beads, 1 lot copper fragments, 1 copper rectangular gorget (with two perforations and cord present), 1 cane-shaped copper object (with fibers wrapping around one end), and 1 lot of dark fibers (with sand).

On May 27–28, 1961, human remains representing, at minimum, 2 individuals were removed from the Bainbridge Township site in Berrien County, MI. In June of 1961, an amateur archeologist donated the remains of one young adult and one child, along with three associated funerary objects, to the UMMA. The human remains date to the Pre-Contact Period based on diagnostic artifacts. No known individuals were identifies. The 3 associated funerary objects present are 1 flat lithic tool (with perforations) and 2 fragments of red ochre.

On various dates, human remains representing, at minimum, 7 individuals were removed from the Moccasin Bluff site (20BE8) in Berrien County, MI. The Moccasin Bluff site is a multicomponent site for which the UMMA holds 2 separate accessions with collections that date to the Pre-Contact Period. In 1938, an amateur archeologist removed human remains from a refuse pit and a mound at the site. In 1947, he donated the remains of three adults and two juveniles to the UMMA. In 1961, a construction crew partially unearthed human remains while burying utility lines. Arthur Jelinek of the UMMA was called in to conduct a salvage excavation, and he collected remains of two adults from a pit. The human remains date to the Pre-Contact/Woodland Period. No known individuals were identified. No associated funerary objects are present.

Determinations Made by the University of Michigan Museum of Anthropology

Officials of the University of Michigan Museum of Anthropology have determined that:

- Pursuant to 25 U.S.C. 3001(9), the human remains described in this notice are Native American based on cranial morphology, dental traits, accession documentation, and archeological context.
- Pursuant to 25 U.S.C. 3001(9), the human remains described in this notice represent the physical remains of 10 individuals of Native American ancestry.
- Pursuant to 25 U.S.C. 3001(3)(A), the 43 objects described in this notice are reasonably believed to have been placed with or near individual human remains at the time of death or later as part of the death rite or ceremony.
- Pursuant to 25 U.S.C. 3001(2), a relationship of shared group identity cannot be reasonably traced between the Native American human remains and associated funerary objects and any present-day Indian tribe.
- According to final judgments of the Indian Claims Commission or the Court of Federal Claims, the land from which the Native American human remains and associated funerary objects were removed is the aboriginal land of the Citizen Potawatomi Nation, Oklahoma; Forest County Potawatomi Community, Wisconsin; Hannahville Indian Community, Michigan; Match-e-be-nash-she-wish Band of Pottawatomi Indians of Michigan; Nottawaseppi Huron Band of the Potawatomi, Michigan (previously listed as the Huron Potawatomi, Inc.); Pokagon Band of Potawatomi Indians, Michigan and Indiana; Prairie Band Potawatomi Nation (previously listed as the Prairie Band of Potawatomi Nation, Kansas); and the Quechan Tribe of the Fort Yuma

Indian Reservation, California & Arizona.

• Treaties, Acts of Congress, or Executive Orders, indicate that the land from which the Native American human remains and associated funerary objects were removed is the aboriginal land of The Tribes.

• Pursuant to 43 CFR 10.11(c)(1), the disposition of the human remains and associated funerary objects may be to The Tribes.

Additional Requestors and Disposition

Representatives of any Indian tribe or Native Hawaiian organization not identified in this notice that wish to request transfer of control of these human remains and associated funerary objects should submit a written request with information in support of the request to Dr. Ben Secunda, NAGPRA Project Manager, University of Michigan, Office of the Vice President for Research, 4080 Fleming Building, 503 Thompson St., Ann Arbor, MI 48109–1340, telephone (734) 647–9085, email *bsecunda@umich.edu*, by December 2, 2013. After that date, if no additional requestors have come forward, transfer of control of the human remains and associated funerary objects to The Tribes may proceed.

The University of Michigan is responsible for notifying The Tribes that this notice has been published.

Dated: September 16, 2013.

Sherry Hutt,

Manager, National NAGPRA Program.

[FR Doc. 2013–25993 Filed 10–30–13; 8:45 am]

BILLING CODE 4312–50–P

DEPARTMENT OF THE INTERIOR

National Park Service

[NPS–WASO–NAGPRA–14035; PPWOCRADN0–PCU00RP14.R50000]

Notice of Inventory Completion: University of Michigan, Ann Arbor, MI

AGENCY: National Park Service, Interior.

ACTION: Notice.

SUMMARY: The University of Michigan has completed an inventory of human remains, in consultation with the appropriate Indian tribes or Native Hawaiian organizations, and has determined that there is no cultural affiliation between the human remains and any present-day Indian tribes or Native Hawaiian organizations. Representatives of any Indian tribe or Native Hawaiian organization not identified in this notice that wish to request transfer of control of these human remains should submit a written request to the University of Michigan. If no additional requestors come forward, transfer of control of the human remains to the Indian tribes or Native Hawaiian organizations stated in this notice may proceed.

DATES: Representatives of any Indian tribe or Native Hawaiian organization not identified in this notice that wish to request transfer of control of these human remains should submit a written request with information in support of the request to the University of Michigan at the address in this notice by December 2, 2013.

ADDRESSES: Dr. Ben Secunda, NAGPRA Project Manager, University of Michigan, Office of the Vice President for Research, 4080 Fleming Building, 503 Thompson St., Ann Arbor, MI 48109–1340, telephone (734) 647–9085, email *bsecunda@umich.edu*.

SUPPLEMENTARY INFORMATION: Notice is here given in accordance with the Native American Graves Protection and Repatriation Act (NAGPRA), 25 U.S.C. 3003, of the completion of an inventory of human remains under the control of the University of Michigan, Ann Arbor, MI. The human remains were removed from St. Clair County, MI.

This notice is published as part of the National Park Service's administrative responsibilities under NAGPRA, 25 U.S.C. 3003(d)(3) and 43 CFR 10.11(d). The determinations in this notice are the sole responsibility of the museum, institution, or Federal agency that has control of the Native American human remains. The National Park Service is not responsible for the determinations in this notice.

Consultation

A detailed assessment of the human remains was made by the University of Michigan Museum of Anthropology professional staff in consultation with representatives of the Bay Mills Indian Community, Michigan; Chippewa-Cree Indians of the Rocky Boy's Reservation, Montana; Grand Traverse Band of Ottawa and Chippewa Indians, Michigan; Hannahville Indian Community, Michigan; Keweenaw Bay Indian Community, Michigan; Lac Vieux Desert Band of Lake Superior Chippewa Indians of Michigan; Little River Band of Ottawa Indians, Michigan; Little Traverse Bay Bands of Odawa Indians, Michigan; Match-e-be-nash-she-wish Band of Pottawatomi Indians of Michigan; Nottawaseppi Huron Band of the Potawatomi, Michigan (previously listed as the Huron Potawatomi, Inc.); Pokagon Band of Potawatomi Indians, Michigan and Indiana; Saginaw Chippewa Indian Tribe of Michigan; and the Sault Ste. Marie Tribe of Chippewa Indians, Michigan.

Additional requests for consultation were sent to the Bad River Band of the Lake Superior Tribe of Chippewa Indians of the Bad River Reservation, Wisconsin; Bois Forte Band (Nett Lake) of the Minnesota Chippewa Tribe, Minnesota; Citizen Potawatomi Nation, Oklahoma; Fond du Lac Band of the Minnesota Chippewa Tribe, Minnesota; Forest County Potawatomi Community, Wisconsin; Grand Portage Band of the Minnesota Chippewa Tribe, Minnesota; Lac Courte Oreilles Band of Lake Superior Chippewa Indians of Wisconsin; Lac du Flambeau Band of Lake Superior Chippewa Indians of the Lac du Flambeau Reservation of Wisconsin; Leech Lake Band of the Minnesota Chippewa Tribe, Minnesota; Mille Lacs Band of the Minnesota Chippewa Tribe, Minnesota; Ottawa Tribe of Oklahoma; Prairie Band Potawatomi Nation (previously listed as the Prairie Band of Potawatomi Nation, Kansas); Quechan Tribe of the Fort Yuma Indian Reservation, California & Arizona; Red Cliff Band of Lake Superior Chippewa Indians of Wisconsin; Red Lake Band of Chippewa Indians, Minnesota; Seneca Nation of Indians (previously listed as the Seneca Nation of New York); Seneca-Cayuga Tribe of Oklahoma; Sokaogon Chippewa Community, Wisconsin; St. Croix Chippewa Indians of Wisconsin; Tonawanda Band of Seneca (previously listed as the Tonawanda Band of Seneca Indians of New York); Turtle Mountain Band of Chippewa Indians of North Dakota; White Earth Band of the Minnesota Chippewa Tribe, Minnesota; and the Wyandotte Nation.

Hereafter, all tribes listed in this section are referred to as ''The Tribes.''

History and Description of the Remains

On an unknown date prior to 1964, human remains representing, at minimum, 1 individual were removed from the Port Huron Area site in St. Clair County, MI. The remains of 1 adult were collected from a location near Port Huron, MI, and donated to the University of Michigan Museum of Anthropology (UMMA) in 1964. No date or time period for the human remains could be established. No known individuals were identified. No associated funerary objects are present.

On September 28, 1942, human remains representing, at minimum, 1 individual were removed from the Nook site (20SC108) in St. Clair County, MI. Amateur archeologists excavated the remains of an older adult female from a bundle burial found in a large blowhole

near the St. Clair delta. The cranium reportedly had post-mortem perforations. A potsherd, dog bones, and turtle bones were also reportedly found in association with the human remains. In 1952, the amateur archeologists donated some of the human remains to the UMMA, but the museum has no record of the cranium, potsherd, and faunal remains being donated. The human remains date to the Late Woodland Period (900–1200 A.D.) based on the presence of the potsherd. No known individuals were identified. No associated funerary objects are present.

On an unknown date prior to 1924, human remains representing, at minimum, 1 individual were removed from the Bunce Creek site (20SC05) in St. Clair County, MI. The remains of one adult (possibly female) were part of a larger collection of Native American human remains and cultural items collected by L.P. Rowland and sold to the UMMA in 1924. An amateur archeologist later visited the site in 1936, and dated it to the Early-to-Late Woodland Period. No known individuals were identified. No associated funerary objects are present.

Determinations Made by the University of Michigan Museum of Anthropology

Officials of the University of Michigan Museum of Anthropology have determined that:

- Pursuant to 25 U.S.C. 3001(9), the human remains described in this notice are Native American based on cranial morphology, dental traits, accession documentation, and archeological context.
- Pursuant to 25 U.S.C. 3001(9), the human remains described in this notice represent the physical remains of 3 individuals of Native American ancestry.
- Pursuant to 25 U.S.C. 3001(2), a relationship of shared group identity cannot be reasonably traced between the Native American human remains and any present-day Indian tribe.
- According to final judgments of the Indian Claims Commission or the Court of Federal Claims, the land from which the Native American human remains were removed is the aboriginal land of the Bad River Band of the Lake Superior Tribe of Chippewa Indians of the Bad River Reservation, Wisconsin; Bay Mills Indian Community, Michigan; Bois Forte Band (Nett Lake) of the Minnesota Chippewa Tribe, Minnesota; Chippewa-Cree Indians of the Rocky Boy's Reservation, Montana; Citizen Potawatomi Nation, Oklahoma; Fond du Lac Band of the Minnesota Chippewa Tribe, Minnesota; Forest County Potawatomi Community, Wisconsin; Grand Portage Band of the Minnesota Chippewa Tribe, Minnesota; Grand Traverse Band of Ottawa and Chippewa Indians, Michigan; Hannahville Indian Community, Michigan; Keweenaw Bay Indian Community, Michigan; Lac Courte Oreilles Band of Lake Superior Chippewa Indians of Wisconsin; Lac du Flambeau Band of Lake Superior Chippewa Indians of the Lac du Flambeau Reservation of Wisconsin; Lac Vieux Desert Band of Lake Superior Chippewa Indians of Michigan; Leech Lake Band of the Minnesota Chippewa Tribe, Minnesota; Little River Band of Ottawa Indians, Michigan; Little Traverse Bay Bands of Odawa Indians, Michigan; Match-e-be-nash-she-wish Band of Pottawatomi Indians of Michigan; Mille Lacs Band of the Minnesota Chippewa Tribe, Minnesota; Nottawaseppi Huron Band of the Potawatomi, Michigan (previously listed as the Huron Potawatomi, Inc.); Ottawa Tribe of Oklahoma; Pokagon Band of Potawatomi Indians, Michigan and Indiana; Prairie Band Potawatomi Nation (previously listed as the Prairie Band of Potawatomi Nation, Kansas); Quechan Tribe of the Fort Yuma Indian Reservation, California & Arizona; Red Cliff Band of Lake Superior Chippewa Indians of Wisconsin; Red Lake Band of Chippewa Indians, Minnesota; Saginaw Chippewa Indian Tribe of Michigan; Sault Ste. Marie Tribe of Chippewa Indians, Michigan; Sokaogon Chippewa Community, Wisconsin; St. Croix Chippewa Indians of Wisconsin; Turtle Mountain Band of Chippewa Indians of North Dakota; and the White Earth Band of the Minnesota Chippewa Tribe, Minnesota.
- Treaties, Acts of Congress, or Executive Orders, indicate that the land from which the Native American human remains were removed is the aboriginal land of The Tribes.
- Pursuant to 43 CFR 10.11(c)(1), the disposition of the human remains may be to The Tribes.

Additional Requestors and Disposition

Representatives of any Indian tribe or Native Hawaiian organization not identified in this notice that wish to request transfer of control of these human remains should submit a written request with information in support of the request to Dr. Ben Secunda, NAGPRA Project Manager, University of Michigan, Office of the Vice President for Research, 4080 Fleming Building, 503 Thompson St., Ann Arbor, MI 48109–1340, telephone (734) 647–9085, email *bsecunda@umich.edu*, by December 2, 2013. After that date, if no additional requestors have come forward, transfer of control of the human remains to The Tribes may proceed.

The University of Michigan is responsible for notifying The Tribes that this notice has been published.

Dated: September 16, 2013.

Sherry Hutt,

Manager, National NAGPRA Program.

[FR Doc. 2013–26003 Filed 10–30–13; 8:45 am]

BILLING CODE 4312–50–P

DEPARTMENT OF THE INTERIOR

National Park Service

[NPS–WASO–NAGPRA–14099; PPWOCRADN0–PCU00RP14.R50000]

Notice of Inventory Completion: Pima County Office of the Medical Examiner, Tucson, AZ

AGENCY: National Park Service, Interior.

ACTION: Notice.

SUMMARY: The Pima County Office of the Medical Examiner (hereafter referred to as PCOME) has completed an inventory of human remains and associated funerary objects, in consultation with the appropriate Indian tribes or Native Hawaiian organizations, and has determined that there is a cultural affiliation between the human remains and associated funerary objects and present-day Indian tribes or Native Hawaiian organizations. Lineal descendants or representatives of any Indian tribe or Native Hawaiian organization not identified in this notice that wish to request transfer of control of these human remains and associated funerary objects should submit a written request to the PCOME. If no additional requestors come forward, transfer of control of the human remains and associated funerary objects to the lineal descendants, Indian tribes, or Native Hawaiian organizations stated in this notice may proceed.

DATES: Lineal descendants or representatives of any Indian tribe or Native Hawaiian organization not identified in this notice that wish to request transfer of control of these human remains and associated funerary objects should submit a written request with information in support of the request to the PCOME at the address in this notice by December 2, 2013.

ADDRESSES: Dr. Bruce Anderson, Forensic Anthropologist, PCOME, Tucson, AZ 85714, telephone (520) 243–8600.

SUPPLEMENTARY INFORMATION: Notice is here given in accordance with the Native American Graves Protection and Repatriation Act (NAGPRA), 25 U.S.C.

3003, of the completion of an inventory of human remains and associated funerary objects under the control of the PCOME, Tucson, AZ. The human remains and associated funerary objects were removed from a location near the town of San Manuel, Pinal County, AZ.

This notice is published as part of the National Park Service's administrative responsibilities under NAGPRA, 25 U.S.C. 3003(d)(3). The determinations in this notice are the sole responsibility of the museum, institution, or Federal agency that has control of the Native American human remains and associated funerary objects. The National Park Service is not responsible for the determinations in this notice.

Consultation

A detailed assessment of the human remains and associated funerary objects was made by the PCOME professional staff in consultation with representatives of the Ak Chin Indian Community of the Maricopa (Ak Chin) Indian Reservation, Arizona; Fort McDowell Yavapai Nation, Arizona; Gila River Indian Community of the Gila River Indian Reservation, Arizona; Hopi Tribe of Arizona; Pascua Yaqui Tribe of Arizona; Salt River Pima-Maricopa Indian Community of the Salt River Reservation, Arizona; San Carlos Apache Tribe of the San Carlos Reservation, Arizona; Tohono O'odham Nation of Arizona; White Mountain Apache Tribe of the Fort Apache Reservation, Arizona; and the Zuni Tribe of the Zuni Reservation, New Mexico.

History and Description of the Remains

In 2009, human remains representing, at minimum, one individual were removed from a river wash near San Manuel in Pinal County, AZ. The remains were removed from the location by the Pinal County Sheriff's Office and were transferred to Pinal County Medical Examiner's Office for forensic analysis. The Pinal County Medical Examiner, Dr Rebecca Hsu, transferred the remains to the Pima County Office of the Medical Examiner for examination by a forensic anthropologist. Dr. Bruce Anderson, Forensic Anthropologist at the PCOME, examined the remains and determined them likely to be prehistoric and of Native American ancestry. The remains were designated with PCOME case number ML 09–01398. No known individuals were identified. No associated funerary objects are present.

In 2010, human remains representing, at minimum, one individual were removed from a river wash near San Manuel in Pinal County, AZ. The remains were removed from the location by the Pinal County Sheriff's Office and were transferred to Pinal County Medical Examiner's Office for forensic analysis. The Pinal County Medical Examiner, Dr. Rebecca Hsu, transferred the remains to the Pima County Office of the Medical Examiner for examination by a forensic anthropologist. Dr. Bruce Anderson, Forensic Anthropologist at the PCOME, examined the remains and determined them likely to be prehistoric and of Native American ancestry. The remains were designated with PCOME case number ML 10–02448. No known individuals were identified. The 387 associated funerary objects are all *Olivia* shell beads.

The human remains and associated funerary objects described in this notice were removed from a location within a 20 mile radius a known the prehistoric ruin, site BB:7:5. This site is a known Native American Hohokam ruin that was deemed such due to the discovery of Gila Polychrome pottery sherds, *Conus* and *Olivia* shell necklaces, and jackrabbit bone tube necklaces. The Hohokam geographical range is represented by the modern day Gila River Indian Community of the Gila River Indian Reservation, Arizona; Hopi Tribe of Arizona; Tohono O'odham Nation of Arizona; and the Zuni Tribe of the Zuni Reservation, New Mexico.

Determinations Made by the PCOME

Officials of the PCOME have determined that:

- Pursuant to 25 U.S.C. 3001(9), the human remains described in this notice represent the physical remains of at least two individuals of Native American ancestry.
- Pursuant to 25 U.S.C. 3001(3)(A), the 387 objects described in this notice are reasonably believed to have been placed with or near individual human remains at the time of death or later as part of the death rite or ceremony.
- Pursuant to 25 U.S.C. 3001(2), there is a relationship of shared group identity that can be reasonably traced between the Native American human remains and associated funerary objects and the Gila River Indian Community of the Gila River Indian Reservation, Arizona; Hopi Tribe of Arizona; Tohono O'odham Nation of Arizona; and the Zuni Tribe of the Zuni Reservation, New Mexico.

Additional Requestors and Disposition

Lineal descendants or representatives of any Indian tribe or Native Hawaiian organization not identified in this notice that wish to request transfer of control of these human remains and associated funerary objects should submit a written request with information in support of the request to Dr. Bruce Anderson, Pima County Office of the Medical Examiner, 2825 East District, Tucson, AZ 85714, telephone (520)–243–8600, by December 2, 2013. After that date, if no additional requestors have come forward, transfer of control of the human remains and associated funerary objects to the Gila River Indian Community of the Gila River Indian Community of the Gila River Indian Reservation, Arizona; Hopi Tribe of Arizona; Tohono O'odham Nation of Arizona; and the Zuni Tribe of the Zuni Reservation, New Mexico, may proceed.

The PCOME is responsible for notifying Ak Chin Indian Community of the Maricopa (Ak Chin) Indian Reservation, Arizona; Fort McDowell Yavapai Nation, Arizona; Gila River Indian Community of the Gila River Indian Reservation, Arizona; Hopi Tribe of Arizona; Pascua Yaqui Tribe of Arizona; Salt River Pima-Maricopa Indian Community of the Salt River Reservation, Arizona; San Carlos Apache Tribe of the San Carlos Reservation, Arizona; Tohono O'odham Nation of Arizona; White Mountain Apache Tribe of the Fort Apache Reservation, Arizona; and the Zuni Tribe of the Zuni Reservation, New Mexico, that this notice has been published.

Dated: September 16, 2013.

Sherry Hutt,

Manager, National NAGPRA Program.

[FR Doc. 2013–25978 Filed 10–30–13; 8:45 am]

BILLING CODE 4312–50–P

DEPARTMENT OF THE INTERIOR

National Park Service

[NPS–WASO–NAGPRA–14034; PPWOCRADN0–PCU00RP14.R50000]

Notice of Inventory Completion: University of Michigan, Ann Arbor, MI

AGENCY: National Park Service, Interior.

ACTION: Notice.

SUMMARY: The University of Michigan has completed an inventory of human remains and associated funerary objects, in consultation with the appropriate Indian tribes or Native Hawaiian organizations, and has determined that there is no cultural affiliation between the human remains and associated funerary objects and any present-day Indian tribes or Native Hawaiian organizations. Representatives of any Indian tribe or Native Hawaiian organization not identified in this notice that wish to request transfer of control

of these human remains and associated funerary objects should submit a written request to the University of Michigan. If no additional requestors come forward, transfer of control of the human remains and associated funerary objects to the Indian tribes or Native Hawaiian organizations stated in this notice may proceed.

DATES: Representatives of any Indian tribe or Native Hawaiian organization not identified in this notice that wish to request transfer of control of these human remains and associated funerary objects should submit a written request with information in support of the request to the University of Michigan at the address in this notice by December 2, 2013.

ADDRESSES: Dr. Ben Secunda, NAGPRA Project Manager, University of Michigan, Office of the Vice President for Research, 4080 Fleming Building, 503 Thompson St., Ann Arbor, MI 48109–1340, telephone (734) 647–9085, email *bsecunda@umich.edu.*

SUPPLEMENTARY INFORMATION: Notice is here given in accordance with the Native American Graves Protection and Repatriation Act (NAGPRA), 25 U.S.C. 3003, of the completion of an inventory of human remains and associated funerary objects under the control of the University of Michigan, Ann Arbor, MI. The human remains and associated funerary objects were removed from Macomb, Monroe, and Wayne Counties, MI.

This notice is published as part of the National Park Service's administrative responsibilities under NAGPRA, 25 U.S.C. 3003(d)(3) and 43 CFR 10.11(d). The determinations in this notice are the sole responsibility of the museum, institution, or Federal agency that has control of the Native American human remains and associated funerary objects. The National Park Service is not responsible for the determinations in this notice.

Consultation

A detailed assessment of the human remains and associated funerary objects was made by the University of Michigan Museum of Anthropology professional staff in consultation with representatives of the Bay Mills Indian Community, Michigan; Chippewa-Cree Indians of the Rocky Boy's Reservation, Montana; Grand Traverse Band of Ottawa and Chippewa Indians, Michigan; Hannahville Indian Community, Michigan; Keweenaw Bay Indian Community, Michigan; Lac Vieux Desert Band of Lake Superior Chippewa Indians of Michigan; Little River Band of Ottawa Indians, Michigan; Little Traverse Bay Bands of Odawa Indians, Michigan; Match-e-be-nash-she-wish Band of Pottawatomi Indians of Michigan; Nottawaseppi Huron Band of the Potawatomi, Michigan (previously listed as the Huron Potawatomi, Inc.); Pokagon Band of Potawatomi Indians, Michigan and Indiana; Saginaw Chippewa Indian Tribe of Michigan; and the Sault Ste. Marie Tribe of Chippewa Indians, Michigan.

Additional requests for consultation were sent to the Absentee-Shawnee Tribe of Indians of Oklahoma; Bad River Band of the Lake Superior Tribe of Chippewa Indians of the Bad River Reservation, Wisconsin; Bois Forte Band (Nett Lake) of the Minnesota Chippewa Tribe, Minnesota; Citizen Potawatomi Nation, Oklahoma; Delaware Nation, Oklahoma; Delaware Tribe of Indians; Eastern Shawnee Tribe of Oklahoma; Fond du Lac Band of the Minnesota Chippewa Tribe, Minnesota; Forest County Potawatomi Community, Wisconsin; Grand Portage Band of the Minnesota Chippewa Tribe, Minnesota; Kickapoo Traditional Tribe of Texas; Kickapoo Tribe of Indians of the Kickapoo Reservation in Kansas; Kickapoo Tribe of Oklahoma; Lac Courte Oreilles Band of Lake Superior Chippewa Indians of Wisconsin; Lac du Flambeau Band of Lake Superior Chippewa Indians of the Lac du Flambeau Reservation of Wisconsin; Leech Lake Band of the Minnesota Chippewa Tribe, Minnesota; Miami Tribe of Oklahoma; Mille Lacs Band of the Minnesota Chippewa Tribe, Minnesota; Ottawa Tribe of Oklahoma; Peoria Tribe of Indians of Oklahoma; Prairie Band Potawatomi Nation (previously listed as the Prairie Band of Potawatomi Nation, Kansas); Quechan Tribe of the Fort Yuma Indian Reservation, California & Arizona; Red Cliff Band of Lake Superior Chippewa Indians of Wisconsin; Red Lake Band of Chippewa Indians, Minnesota; Sac & Fox Nation of Missouri in Kansas and Nebraska; Sac & Fox Nation, Oklahoma; Sac & Fox Tribe of the Mississippi in Iowa; Seneca Nation of Indians (previously listed as the Seneca Nation of New York); Seneca-Cayuga Tribe of Oklahoma; Shawnee Tribe; Sokaogon Chippewa Community, Wisconsin; St. Croix Chippewa Indians of Wisconsin; Tonawanda Band of Seneca (previously listed as the Tonawanda Band of Seneca Indians of New York); Turtle Mountain Band of Chippewa Indians of North Dakota; White Earth Band of the Minnesota Chippewa Tribe, Minnesota; and the Wyandotte Nation.

Hereafter, all tribes listed in this section are referred to as ''The Tribes.''

History and Description of the Remains

On an unknown date prior to 1962, human remains representing, at minimum, 1 individual were removed from the Verchave #3 site (20MB182) in Macomb County, MI. Farmers found the sun-bleached and very fragmentary remains of one adult on the surface while removing sand and donated the remains to the University of Michigan Museum of Anthropology (UMMA). Archeologist James Fitting later described the burial site as being part of a larger multicomponent site that included a layer of post-contact occupation, including a possible cemetery, over a layer of pre-contact occupation. No date or time period for the human remains could be established. No known individuals were identified. No associated funerary objects are present.

In 1926, human remains representing, at minimum, 2 individuals were removed from the Norton site (20MB5) in Macomb County, MI. Charles Delaney of the UMMA originally reported finding human remains, pottery, and other ''relics'' during surface surveys near Romeo, MI. In 1937, Emerson Greenman of the UMMA carried out excavations in the same area and found evidence of a village approximately 400 yards away. The human remains date to the Springwells Phase of the Late Woodland Period (1200–1400 A.D.) based on the pottery collected from the nearby village. No known individuals were identified. No associated funerary objects are present.

On April 25, 1979, human remains representing, at minimum, 1 individual were removed from the Feick site (20MR281) in Monroe County, MI. A backhoe driver unearthed the human remains during sand removal operations near Exeter Road. The remains were taken to a biology teacher at Monroe High School for identification and later donated to the UMMA by the Monroe County Sheriff's Department. The remains were identified as being Native American and representing one adult, possibly female. No date or time period for the human remains could be established. No known individuals were identified. No associated funerary objects are present.

In June of 1966, human remains representing, at minimum, 1 individual were removed from Otter Creek Road site (20MR44) in Monroe County, MI. David Brose of the UMMA collected the human remains representing one adult during a surface survey on private property. The landowner also collected artifacts from the site, but did not donate them to the UMMA. The

museum has no further information about this collection. The human remains date to the Late Woodland Period (800–1400 A.D.) based on the artifacts collected by the landowner. No known individuals were identified. No associated funerary objects are present.

On an unknown date prior to 1940, human remains representing, at minimum, 2 individuals were removed from the Near Lake Erie site in Monroe County, MI. The remains of two adults were likely found in 1924 during grading activities associated with railroad tracks running through Bedford Township, MI. Museum records indicate that the human remains, along with associated funerary objects, were collected from the site and subsequently donated to the UMMA on an unknown date during the 1930s. The human remains date to the Late Woodland Period (500–1400 A.D.) based on diagnostic artifacts. No known individuals were identified. The 12 associated funerary objects present are ceramic sherds.

In June of 1966, human remains representing, at minimum, 1 individual were removed from the Strasburg Ridge site (20MR128) in Monroe County, MI. David Brose of the UMMA collected the remains of one adult during a surface survey of an open field. No date or time period for the human remains could be established. No known individuals were identified. No associated funerary objects are present.

On multiple dates between 1959 and 1980, human remains representing, at minimum, 26 individuals were removed from the Lucy King site (20MR2) in Monroe County, MI. In 1959, Mark Papworth of the UMMA conducted the first excavation of at least 11 individuals. Papworth collected multiple bundle burials from a small, shallow pit, and noted multiple commingled remains of various ages. A publication about the excavation notes multiple Brewerton stemmed points being found in association with the human remains, but the museum has no record of these points being donated to the UMMA. The presence of these points suggest the human remains date to the Late Archaic Period. In 1972, archeologists from Western Michigan University conducted a second excavation of at least three individuals, and subsequently donated those remains to the UMMA in 1979. Most of the remains from this excavation came from the plow zone and, as a result, are very fragmentary and were not found in an archeological context. In 1977, archeologists from the UMMA conducted a third excavation of at least one individual. Again, most of the human remains came from the plow zone and were not found in an archeological context. Finally, in 1980, a backhoe operating near the site inadvertently unearthed human remains. James J. Krakker of the UMMA was contacted to conduct a salvage excavation of at least 11 individuals. Krakker excavated the undisturbed portion of an ossuary and was also able to assign features at the site. Several individuals were noted as being buried in a flexed position, including one area of the site that showed evidence of having been burned. Marginella beads were found buried in association with one individual from the ossuary. Several of the individuals found during Krakker's excavation showed signs of extensive pathologies suggesting they suffered from infectious disease and possibly treponemal disease. A date or time period for the human remains is difficult to establish due to the complexity of the site and lack of an archeological context for most of the collections. The human remains date to, at the earliest, the Late Archaic Period, and, at the latest, the Woodland/Late Woodland Period (500–1600 A.D.). No known individuals were identified. The 1 associated funerary object is 1 lot of Marginella shells.

In June of 1966, human remains representing, at minimum, 2 individuals were removed from the Bay Creek site (20MR31) in Monroe County, MI. David Brose of the UMMA found the remains of at least one adult and one child during a surface survey south of Bay Creek. The human remains date to between the Late Woodland and Post-Contact Periods (500 A.D.–1850 A.D.) based on diagnostic artifacts collected from other areas of the site. No known individuals were identified. No associated funerary objects are present.

In 1940, human remains representing, at minimum, 13 individuals were removed from the Indian Trails site (20MR4) in Monroe County, MI. Ralph Patton of the UMMA excavated the remains of five adults, five older adults, two juveniles, and one cremated juvenile from a burial pit near Little Swan Creek. The remains of several additional individuals were noted but not collected due to their fragile condition. The site included multiple burials pits wherein various mortuary practices were evident. Patton noted extended burials, bundle burials, cremations, red ochre treatments, and post-mortem modifications such as plaque removals. The human remains date to the Middle Late Woodland Period (1184 A.D. +/−112 years) based on radiocarbon 14 dating. No known individuals were identified. No associated funerary objects are present.

On an unknown date in 1967, and on an unknown date between 1982–1984, human remains representing, at minimum, 1 individual were removed from the Morin site (20MR40) in Monroe County, MI. A landowner unearthed human remains while digging to install a pipeline on his property in Erie Township, MI. In 1967, an amateur archeologist conducted multiple excavations at the site and collected human remains and associated funerary objects. The individuals were noted as being buried in an extended position. The UMMA received some of the associated funerary objects from these initial excavations as donations, but the museum received no human remains from this collector. On an unknown date between 1982 and 1984, another amateur archeologist excavated human remains from the site on multiple occasions. Approximately one-quarter of the site was reportedly excavated. The remains of one adolescent were collected along with associated funerary objects. Additional objects were collected from the site, although these objects date to a different time period than the burials. The human remains date to the Late Woodland Period (500–1200 A.D.) based on diagnostic artifacts and chronometric dating. No known individuals were identified. The 40 associated funerary objects present are 1 biface projectile point (with a corner removed), 1 lot of ceramic sherds (from a single vessel), 19 ceramic sherds (from a single vessel), and 19 bird bones.

On an unknown date prior to 1956, human remains representing, at minimum, 9 individuals were removed from the Foot of First Street site (20WN52) in Wayne County, MI. Workers discovered the burials below First Street while excavating for sewer lines. A local businessman and landowner collected the remains of four adults, two adolescents, and three children, and gave them to an employee of the Detroit Public Library who worked in the Burton Historical Collection. The employee subsequently donated the human remains to the UMMA in 1956. No date or time period for the human remains could be established for the burials, although a note on file from the State Archaeologist's Office of Michigan indicates that the area where the remains were discovered was once the site of a Huron (Wyandot) village in the Post-Contact Period. No known individuals were identified. No associated funerary objects are present.

On April 13, 1953, human remains representing, at minimum, 1 individual

were removed from the Michigan State Police site (20WN1010) in Wayne County, MI. A local resident discovered and collected the cranium of an adult female from a location near State Highway 25. The police concluded the human remains were from a Native American burial site and transferred them to the UMMA. No date or time period for the human remains could be established. No known individuals were identified. No associated funerary objects are present.

On an unknown date in the 1950s, human remains representing, at minimum, 1 individual were removed from the Waywash site in Wayne County, MI. A local resident discovered and collected the remains of one adult from the surface of the ground. The human remains were subsequently donated to the UMMA in 1971. No date or time period for the human remains could be established. No known individuals were identified. No associated funerary objects are present.

Sometime before March 20, 1935, human remains representing, at minimum, 1 individual were removed from the Sanderson D–8 site (20WN240) in Wayne County, MI. A local resident found the human remains on the surface of the ground in a road cut. The remains of one adult were collected and donated to the UMMA on March 20, 1935. No date or time period for the human remains could be established. No known individuals were identified. No associated funerary objects are present.

In 1932, human remains representing, at minimum, 1 individual were removed from the Huron River #3 site (20WN253) in Wayne County, MI. Amateur collectors found the human remains on the surface of the ground while traveling through the area. They collected the human remains and subsequently donated them to the UMMA. No date or time period for the human remains could be established. No known individuals were identified. No associated funerary objects are present.

In 1932, human remains representing, at minimum, 2 individuals were removed from the Holmquist W–19 site (20WN131) in Wayne County, MI. Amateur collectors found the human remains while traveling near the Huron River, representing one adult male and one older adult (possibly female). The remains were subsequently donated to the UMMA. The adult male's cranium had evidence of a post-mortem plaque removal. The human remains date to the Woodland Period (850–1400 A.D.) based on mortuary treatment. No known individuals were identified. No associated funerary objects are present.

On an unknown date prior to 1935, human remains representing, at minimum, 4 individuals were removed from the Granville site in Wayne County, MI. A local resident collected the remains of three adults and one child from a location near New Boston, MI, and gave the remains to an amateur collector who subsequently donated them to the UMMA in 1935. No date or time period for the human remains could be established. No known individuals were identified. No associated funerary objects are present.

In 1889, human remains representing, at minimum, 4 individuals were removed from the Exposition Grounds site (20WN7) in Wayne County, MI. The human remains were likely found during construction activities at the International Exposition Grounds near historic Ft. Wayne in Detroit, MI. The remains of two adults (one possibly male), one child, and one infant were collected and given to a local politician who subsequently donated the collections to the UMMA on an unknown date. Historical sources indicate that the site contained a Native American burial ground known as ''Great Mound.'' This mound was destroyed at some point prior to the construction of the exposition grounds. No date or time period for the human remains could be established. No known individuals were identified. No associated funerary objects are present.

In 1933, 1934, and 1935, human remains representing, at minimum, 28 individuals were removed from the Huron River #2 site (20WN132) in Wayne County, MI. In 1933, an amateur collector found human remains and artifacts near the Huron River in Huron Township, MI. He noted finding two complete skeletons at the site, oriented in an east-west direction, and an additional cranium situated in a north-south direction. The collector also reported finding at least 30 petrosal portions that he suggested were from children. The human remains were not collected, but instead reburied due to their fragile condition. Many artifacts made from flint were noted, but were not collected. Other types of associated funerary objects were collected from the site and subsequently donated to the UMMA. In 1934, Wilbert Hinsdale of the UMMA excavated multiple individuals from this site along with associated funerary objects. Hinsdale noted the individuals were buried in a variety of postures. Some individuals were interred in an extended position, lying side-by-side, with the heads of some individuals in line with the feet of other individuals. Three individuals were interred face down with the cranium of one of these individuals facing to the right. Bundle burials were also present at the site, some intruding into other burials. Some burials were also located above other burials, with mixed ash and charcoal between them. Hinsdale also noted that four craniums of individuals lying in an extended position had post-mortem perforations near the vertex. Additionally, multiple craniums were plastered over with clay pushed into the eye orbits, ears, and nasal area. It is unclear if the craniums with clay were the same as those that had perforations. Hinsdale also noted that fish bones were found in the fill dirt, but they are not present in the collection. In 1935, an amateur collector excavated additional individuals and associated funerary objects from this site, and donated them to the UMMA. Finally, 1 lot of DNA extractions was taken from the site in 2006. The human remains date to the Early Late Woodland Period (500–900 A.D.) based on diagnostic artifacts and mortuary treatment. No known individuals were identified. The 159 associated funerary objects present are 83 ceramic sherds, 4 ceramic sherds without decoration, 33 stone and ceramic sherds, 7 chert flakes and points, 1 lithic scraper, 2 lithic fragments, 23 clay fragments, 1 ceramic elbow pipe, and 5 animal bones.

In 1932, human remains representing, at minimum, 1 individual were removed from the Huron River #6 site (20WN242) in Wayne County, MI. Amateur collectors removed the remains of an adolescent from the surface near the Huron River and subsequently donated them to the UMMA in April of 1936. No date or time period for the human remains could be established. No known individuals were identified. No associated funerary objects are present.

On April 5, 1981, human remains representing the remains of, at minimum, 1 individual were removed from the Rennie site (20WN160) in Wayne County, MI. An amateur archeologist collected the remains of one adult from the surface near the Huron River and subsequently donated them to the UMMA. No date or time period for the human remains could be established. No known individuals were identified. No associated funerary objects are present.

On September 13, 1985, human remains representing, at minimum, 10 individuals were removed from the Arbor Springs site (20WN1008) in Wayne County, MI. A landowner unearthed human remains with a backhoe during construction activities in his yard. He contacted the UMMA, and John O'Shea and Claire McHale conducted a salvage excavation at the

site. They identified a partially destroyed ossuary and collected the remains of nine adults and one infant. The landowner donated only some of the excavated human remains to the museum. The human remains date to the Late Woodland Period (500–1640 A.D.) based on mortuary treatment. No known individuals were identified. No associated funerary objects are present.

In 1890, human remains representing, at minimum, 1 individual were removed from the Warner site (20WN1011) in Wayne County, MI. A local resident collected the remains of an older adult female near Highway 12 in Nankin Township, MI, and donated them to the UMMA in 1933. The museum has no further information about this collection. The human remains date to the Early Late Woodland Period (500–1100 A.D.) based on diagnostic objects. No known individuals were identified. The 20 associated funerary objects present are ceramic sherds.

Determinations Made by the University of Michigan Museum of Anthropology

Officials of the University of Michigan Museum of Anthropology have determined that:

- Pursuant to 25 U.S.C. 3001(9), the human remains described in this notice are Native American based on cranial morphology, dental traits, accession documentation, and archeological context.
- Pursuant to 25 U.S.C. 3001(9), the human remains described in this notice represent the physical remains of 114 individuals of Native American ancestry.
- Pursuant to 25 U.S.C. 3001(3)(A), the 232 objects described in this notice reasonably believed to have been placed with or near individual human remains at the time of death or later as part of the death rite or ceremony.
- Pursuant to 25 U.S.C. 3001(2), a relationship of shared group identity cannot be reasonably traced between the Native American human remains and associated funerary objects and any present-day Indian tribe.
- According to final judgments of the Indian Claims Commission or the Court of Federal Claims, the land from which the Native American human remains and associated funerary objects were removed is the aboriginal land of the Bad River Band of the Lake Superior Tribe of Chippewa Indians of the Bad River Reservation, Wisconsin; Bay Mills Indian Community, Michigan; Bois Forte Band (Nett Lake) of the Minnesota Chippewa Tribe, Minnesota; Chippewa-Cree Indians of the Rocky Boy's Reservation, Montana; Citizen Potawatomi Nation, Oklahoma; Delaware Nation, Oklahoma; Delaware Tribe of Indians; Fond du Lac Band of the Minnesota Chippewa Tribe, Minnesota; Forest County Potawatomi Community, Wisconsin; Grand Portage Band of the Minnesota Chippewa Tribe, Minnesota; Grand Traverse Band of Ottawa and Chippewa Indians, Michigan; Hannahville Indian Community, Michigan; Keweenaw Bay Indian Community, Michigan; Lac Courte Oreilles Band of Lake Superior Chippewa Indians of Wisconsin; Lac du Flambeau Band of Lake Superior Chippewa Indians of the Lac du Flambeau Reservation of Wisconsin; Lac Vieux Desert Band of Lake Superior Chippewa Indians of Michigan; Leech Lake Band of the Minnesota Chippewa Tribe, Minnesota; Little River Band of Ottawa Indians, Michigan; Little Traverse Bay Bands of Odawa Indians, Michigan; Match-e-be-nash-she-wish Band of Pottawatomi Indians of Michigan; Mille Lacs Band of the Minnesota Chippewa Tribe, Minnesota; Nottawaseppi Huron Band of the Potawatomi, Michigan (previously listed as the Huron Potawatomi, Inc.); Ottawa Tribe of Oklahoma; Pokagon Band of Potawatomi Indians, Michigan and Indiana; Prairie Band Potawatomi Nation (previously listed as the Prairie Band of Potawatomi Nation, Kansas); Quechan Tribe of the Fort Yuma Indian Reservation, California & Arizona; Red Cliff Band of Lake Superior Chippewa Indians of Wisconsin; Red Lake Band of Chippewa Indians, Minnesota; Saginaw Chippewa Indian Tribe of Michigan; Sault Ste. Marie Tribe of Chippewa Indians, Michigan; Sokaogon Chippewa Community, Wisconsin; St. Croix Chippewa Indians of Wisconsin; Turtle Mountain Band of Chippewa Indians of North Dakota; White Earth Band of the Minnesota Chippewa Tribe, Minnesota; and the Wyandotte Nation.
- Treaties, Acts of Congress, or Executive Orders, indicate that the land from which the Native American human remains and associated funerary objects were removed is the aboriginal land of The Tribes.
- Pursuant to 43 CFR 10.11(c)(1), the disposition of the human remains and associated funerary objects may be to The Tribes.

Additional Requestors and Disposition

Representatives of any Indian tribe or Native Hawaiian organization not identified in this notice that wish to request transfer of control of these human remains and associated funerary objects should submit a written request with information in support of the request to Dr. Ben Secunda, NAGPRA Project Manager, University of Michigan, Office of the Vice President for Research, 4080 Fleming Building, 503 Thompson St., Ann Arbor, MI 48109–1340, telephone (734) 647–9085, email *bsecunda@umich.edu,* by December 2, 2013. After that date, if no additional requestors have come forward, transfer of control of the human remains and associated funerary objects to The Tribes may proceed.

The University of Michigan is responsible for notifying The Tribes that this notice has been published.

Dated: September 16, 2013.

Sherry Hutt,

Manager, National NAGPRA Program.

[FR Doc. 2013–26005 Filed 10–30–13; 8:45 am]

BILLING CODE 4312–50–P

DEPARTMENT OF THE INTERIOR

National Park Service

[NPS–WASO–NAGPRA–14042; PPWOCRADN0–PCU00RP14.R50000]

Notice of Inventory Completion: University of Michigan, Ann Arbor, MI

AGENCY: National Park Service, Interior.

ACTION: Notice.

SUMMARY: The University of Michigan has completed an inventory of human remains and associated funerary objects, in consultation with the appropriate Indian tribes or Native Hawaiian organizations, and has determined that there is no cultural affiliation between the human remains and associated funerary objects and any present-day Indian tribes or Native Hawaiian organizations. Representatives of any Indian tribe or Native Hawaiian organization not identified in this notice that wish to request transfer of control of these human remains and associated funerary objects should submit a written request to the University of Michigan. If no additional requestors come forward, transfer of control of the human remains and associated funerary objects to the Indian tribes or Native Hawaiian organizations stated in this notice may proceed.

DATES: Representatives of any Indian tribe or Native Hawaiian organization not identified in this notice that wish to request transfer of control of these human remains and associated funerary objects should submit a written request with information in support of the request to the University of Michigan at the address in this notice by December 2, 2013.

ADDRESSES: Dr. Ben Secunda, NAGPRA Project Manager, University of Michigan, Office of the Vice President

for Research, 4080 Fleming Building, 503 Thompson St., Ann Arbor, MI 48109–1340, telephone (734) 647–9085, email *bsecunda@umich.edu*.

SUPPLEMENTARY INFORMATION: Notice is here given in accordance with the Native American Graves Protection and Repatriation Act (NAGPRA), 25 U.S.C. 3003, of the completion of an inventory of human remains and associated funerary objects under the control of the University of Michigan, Ann Arbor, MI. The human remains and associated funerary objects were removed from Gogebic County, MI.

This notice is published as part of the National Park Service's administrative responsibilities under NAGPRA, 25 U.S.C. 3003(d)(3) and 43 CFR 10.11(d). The determinations in this notice are the sole responsibility of the museum, institution, or Federal agency that has control of the Native American human remains and associated funerary objects. The National Park Service is not responsible for the determinations in this notice.

Consultation

A detailed assessment of the human remains and associated funerary objects was made by the University of Michigan Museum of Anthropology professional staff in consultation with representatives of the Chippewa-Cree Indians of the Rocky Boy's Reservation, Montana; Keweenaw Bay Indian Community, Michigan; and the Lac Vieux Desert Band of Lake Superior Chippewa Indians of Michigan.

Additional requests for consultation were sent to the Bad River Band of the Lake Superior Tribe of Chippewa Indians of the Bad River Reservation, Wisconsin; Bois Forte Band (Nett Lake) of the Minnesota Chippewa Tribe, Minnesota; Fond du Lac Band of the Minnesota Chippewa Tribe, Minnesota; Grand Portage Band of the Minnesota Chippewa Tribe, Minnesota; Lac Courte Oreilles Band of Lake Superior Chippewa Indians of Wisconsin; Lac du Flambeau Band of Lake Superior Chippewa Indians of the Lac du Flambeau Reservation of Wisconsin; Leech Lake Band of the Minnesota Chippewa Tribe, Minnesota; Mille Lacs Band of the Minnesota Chippewa Tribe, Minnesota; Red Cliff Band of Lake Superior Chippewa Indians of Wisconsin; Red Lake Band of Chippewa Indians, Minnesota; Sokaogon Chippewa Community, Wisconsin; St. Croix Chippewa Indians of Wisconsin; Turtle Mountain Band of Chippewa Indians of North Dakota; and the White Earth Band of the Minnesota Chippewa Tribe, Minnesota.

Hereafter, all tribes listed in this section are referred to as ''The Tribes.''

History and Description of the Remains

In 1931, human remains representing, at minimum, 2 individuals were removed from the Lake Gogebic site (20GB1) in Gogebic County, MI. Carl E. Guthe of the University of Michigan Museum of Anthropology excavated the central portion of a burial mound and collected remains from one adult and one child, along with 110 associated funerary objects. The human remains date to the Early Late Woodland Period (500–1000 A.D.) based on diagnostic objects and mortuary treatment. No known individuals were identified. The 110 associated funerary objects present are 2 double-pointed copper awls, 1 hammer stone, 2 lithic scrapers, 1 quartz biface, 103 ceramic sherds, and 1 lot of porcupine bones.

Determinations Made by the University of Michigan Museum of Anthropology

Officials of the University of Michigan Museum of Anthropology have determined that:

- Pursuant to 25 U.S.C. 3001(9), the human remains described in this notice are Native American based on cranial morphology, dental traits, accession documentation, and archeological context.
- Pursuant to 25 U.S.C. 3001(9), the human remains described in this notice represent the physical remains of 2 individuals of Native American ancestry.
- Pursuant to 25 U.S.C. 3001(3)(A), the 110 objects described in this notice are reasonably believed to have been placed with or near individual human remains at the time of death or later as part of the death rite or ceremony.
- Pursuant to 25 U.S.C. 3001(2), a relationship of shared group identity cannot be reasonably traced between the Native American human remains and associated funerary objects and any present-day Indian tribe.
- According to final judgments of the Indian Claims Commission or the Court of Federal Claims, the land from which the Native American human remains and associated funerary objects were removed is the aboriginal land of The Tribes.
- Treaties, Acts of Congress, or Executive Orders, indicate that the land from which the Native American human remains and associated funerary objects were removed is the aboriginal land of The Tribes.
- Pursuant to 43 CFR 10.11(c)(1), the disposition of the human remains and associated funerary objects may be to The Tribes.

Additional Requestors and Disposition

Representatives of any Indian tribe or Native Hawaiian organization not identified in this notice that wish to request transfer of control of these human remains and associated funerary objects should submit a written request with information in support of the request to Dr. Ben Secunda, NAGPRA Project Manager, University of Michigan, Office of the Vice President for Research, 4080 Fleming Building, 503 Thompson St., Ann Arbor, MI 48109–1340, telephone (734) 647–9085, email *bsecunda@umich.edu,* by December 2, 2013. After that date, if no additional requestors have come forward, transfer of control of the human remains and associated funerary objects to The Tribes may proceed.

The University of Michigan is responsible for notifying The Tribes that this notice has been published.

Dated: September 16, 2013.

Sherry Hutt,

Manager, National NAGPRA Program.

[FR Doc. 2013–25980 Filed 10–30–13; 8:45 am]

BILLING CODE 4312–50–P

DEPARTMENT OF THE INTERIOR

National Park Service

[NPS–WASO–NAGPRA–14033; PPWOCRADN0–PCU00RP14.R50000]

Notice of Inventory Completion: University of Michigan, Ann Arbor, MI

AGENCY: National Park Service, Interior.

ACTION: Notice.

SUMMARY: The University of Michigan has completed an inventory of human remains and associated funerary objects, in consultation with the appropriate Indian tribes or Native Hawaiian organizations, and has determined that there is no cultural affiliation between the human remains and associated funerary objects and any present-day Indian tribes or Native Hawaiian organizations. Representatives of any Indian tribe or Native Hawaiian organization not identified in this notice that wish to request transfer of control of these human remains and associated funerary objects should submit a written request to the University of Michigan. If no additional requestors come forward, transfer of control of the human remains and associated funerary objects to the Indian tribes or Native Hawaiian organizations stated in this notice may proceed.

DATES: Representatives of any Indian tribe or Native Hawaiian organization not identified in this notice that wish to

request transfer of control of these human remains and associated funerary objects should submit a written request with information in support of the request to the University of Michigan at the address in this notice by December 2, 2013.

ADDRESSES: Dr. Ben Secunda, NAGPRA Project Manager, University of Michigan, Office of the Vice President for Research, 4080 Fleming Building, 503 Thompson St., Ann Arbor, MI 48109–1340, telephone (734) 647–9085, email *bsecunda@umich.edu.*

SUPPLEMENTARY INFORMATION: Notice is here given in accordance with the Native American Graves Protection and Repatriation Act (NAGPRA), 25 U.S.C. 3003, of the completion of an inventory of human remains and associated funerary objects under the control of the University of Michigan, Ann Arbor, MI. The human remains and associated funerary objects were removed from Genesee, Tuscola, and Washtenaw Counties, MI.

This notice is published as part of the National Park Service's administrative responsibilities under NAGPRA, 25 U.S.C. 3003(d)(3) and 43 CFR 10.11(d). The determinations in this notice are the sole responsibility of the museum, institution, or Federal agency that has control of the Native American human remains and associated funerary objects. The National Park Service is not responsible for the determinations in this notice.

Consultation

A detailed assessment of the human remains and associated funerary objects was made by the University of Michigan Museum of Anthropology professional staff in consultation with representatives of the Bay Mills Indian Community, Michigan; Chippewa-Cree Indians of the Rocky Boy's Reservation, Montana; Grand Traverse Band of Ottawa and Chippewa Indians, Michigan; Hannahville Indian Community, Michigan; Keweenaw Bay Indian Community, Michigan; Lac Vieux Desert Band of Lake Superior Chippewa Indians of Michigan; Little River Band of Ottawa Indians, Michigan; Little Traverse Bay Bands of Odawa Indians, Michigan; Match-e-be-nash-she-wish Band of Pottawatomi Indians of Michigan; Nottawaseppi Huron Band of the Potawatomi, Michigan (previously listed as the Huron Potawatomi, Inc.); Pokagon Band of Potawatomi Indians, Michigan and Indiana; Saginaw Chippewa Indian Tribe of Michigan; and the Sault Ste. Marie Tribe of Chippewa Indians, Michigan.

Additional requests for consultation were sent to the Bad River Band of the Lake Superior Tribe of Chippewa Indians of the Bad River Reservation, Wisconsin; Bois Forte Band (Nett Lake) of the Minnesota Chippewa Tribe, Minnesota; Citizen Potawatomi Nation, Oklahoma; Fond du Lac Band of the Minnesota Chippewa Tribe, Minnesota; Forest County Potawatomi Community, Wisconsin; Grand Portage Band of the Minnesota Chippewa Tribe, Minnesota; Lac Courte Oreilles Band of Lake Superior Chippewa Indians of Wisconsin; Lac du Flambeau Band of Lake Superior Chippewa Indians of the Lac du Flambeau Reservation of Wisconsin; Leech Lake Band of the Minnesota Chippewa Tribe, Minnesota; Mille Lacs Band of the Minnesota Chippewa Tribe, Minnesota; Ottawa Tribe of Oklahoma; Prairie Band Potawatomi Nation (previously listed as the Prairie Band of Potawatomi Nation, Kansas); Quechan Tribe of the Fort Yuma Indian Reservation, California & Arizona; Red Cliff Band of Lake Superior Chippewa Indians of Wisconsin; Red Lake Band of Chippewa Indians, Minnesota; Sokaogon Chippewa Community, Wisconsin; St. Croix Chippewa Indians of Wisconsin; Turtle Mountain Band of Chippewa Indians of North Dakota; White Earth Band of the Minnesota Chippewa Tribe, Minnesota; and the Wyandotte Nation.

Hereafter, all tribes listed in this section are referred to as ''The Tribes.''

History and Description of the Remains

On an unknown date prior to 1936, human remains representing, at minimum, 1 individual were removed from the Otisville site in Genesee County, MI. The remains of one adult were collected during gravel pit operations and donated to the University of Michigan Museum of Anthropology (UMMA). A burial mound reportedly once existed in the area. No date or time period for the human remains could be established. No known individuals were identified. No associated funerary objects are present.

On December 13, 1933, human remains representing, at minimum, 4 individuals were removed from the Flint site (20GS2) in Genesee County, MI. James Griffin of the UMMA excavated the remains of three adults and one juvenile found during gravel pit operations near the Flint River. The site was noted as having been partially destroyed. No date or time period for the human remains could be established. No known individuals were identified. No associated funerary objects are present.

On an unknown date prior to 1938, human remains representing, at minimum, 4 individuals were removed from the Unknown Flint site in Genesee County, MI. The remains of two adults, one sub-adult, and one child were found in the Great Lakes Collection of the UMMA with an associated tag reading ''Flint?'' which is believed to mean Flint, MI. No date or time period for the human remains could be established. No known individuals were identified. No associated funerary objects are present.

On an unknown date prior to 1965, human remains representing, at minimum, 4 individuals were identified among a collection of fossils known as the Hibbard Collection held at the UMMA. In 1965, Claude Hibbard, a Professor of Geology at the University of Michigan, donated to the UMMA a large collection of fossils that he collected over years of geological excavations. The human remains were identified and removed from Hibbard's collection during museum cataloguing activities. It is believed that Hibbard collected these human remains, which represent three adults and one adolescent, during one of his geological excavations. A note with the human remains indicates that they were found somewhere near the Flint River in Genesee County, MI. No date or time period for the human remains could be established. No known individuals were identified. No associated funerary objects are present.

On May 24, 1936, human remains representing, at minimum, 3 individuals were removed from the James Kirk Farm site (20TU153) in Tuscola County, MI. Emerson Greenman of the UMMA excavated the human remains of one older adult female, one adult, and one infant from a location near Watrousville, MI. No date or time period for the human remains could be established. No known individuals were identified. No associated funerary objects are present.

On an unknown date prior to 1925, human remains representing, at minimum, 3 individuals were removed from the Atkin site (20TU104) in Tuscola County, MI. On December 16, 1925, farmers unearthed the remains of two adults (one of which was possibly male) and one adolescent female while working on their land near the Cass River. The human remains were collected and donated to the UMMA. The human remains date to the Early Late Woodland Period (850–300 B.C.) based on mortuary treatment. No known individuals were identified. No associated funerary objects are present.

On an unknown date prior to 1936, human remains representing, at

minimum, 2 individuals were removed from the Grant site in Tuscola County, MI. A landowner collected the remains of two adults from a mound and donated them to the UMMA. This site may be the same as the Atkin site (20TU104) also in Tuscola County, MI. The human remains date to the Woodland Period (850 B.C. to 1400 A.D.) based on mortuary treatment. No known individuals were identified. No associated funerary objects are present.

Between May 29 and 31, 1936, human remains representing, at minimum, 7 individuals were removed from the Caro site in Tuscola County, MI. M. Titiea collected the remains of two adult females, one adult, one adolescent, one child, one infant, and one neonate as part of an excavation directed by Emerson Greenman of the UMMA. No date or time period for the human remains could be established. No known individuals were identified. No associated funerary objects are present.

On an unknown date, human remains representing, at minimum, 2 individuals were removed from the Long Sleep site in Tuscola County, MI. The burials were discovered during highway construction activities. A local resident collected the remains of one adult male and one adolescent, and donated them to the UMMA in 1994. No date or time period for the human remains could be established. No known individuals were identified. No associated funerary objects are present.

In May 1930, human remains representing, at minimum, 2 individuals were removed from the Pleasant Lake site (20WA285) in Washtenaw County, MI. A Boy Scout troop from Allen Park, MI, collected the remains of one adult male and one child and donated them to the UMMA. No date or time period for the human remains could be established. No known individuals were identified. No associated funerary objects are present.

On April 29, 1931, human remains representing, at minimum, 2 individuals were removed from the Fred Ewald Farm site in Washtenaw County, MI. The remains of one adult female and one child were collected during construction activities near Dexter, MI, and donated to the UMMA. No date or time period for the human remains could be established. No known individuals were identified. No associated funerary objects are present.

On an unknown date prior to 1951, human remains representing, at minimum, 3 individuals were removed from the Dewey site in Washtenaw County, MI. The remains of one adult, one juvenile, and one infant were collected during road construction activities near Chelsea, MI, and donated to the UMMA. The individuals were reportedly found buried in a flexed position. No date or time period for the human remains could be established. No known individuals were identified. No associated funerary objects are present.

On an unknown date prior to 1924, human remains representing, at minimum, 1 individual was removed from the Barr site (20WA70) in Washtenaw County, MI. A local farmer unearthed the cranium of a young adult female while plowing a field near the Saline River. The remains were reportedly found with a brass kettle that was not donated to the UMMA but that suggests the human remains date to the Post-Contact Period. No known individuals were identified. No associated funerary objects are present.

In April 1945, human remains representing, at minimum, 2 individuals were removed from the Wiley site (20WA2) in Washtenaw County, MI. The remains of two adults, both possibly female, were collected during gravel pit operations near Ford Lake and donated to the UMMA. The human remains are believed to date to the Late Woodland Period (500–1400 A.D.) based on the burials in an ossuary. No known individuals were identified. No associated funerary objects are present.

In 1965, human remains representing, at minimum, 1 individual were removed from the Schaffer Gravel Pit site (20WA52) in Washtenaw County, MI. The remains of a young adult female, buried in a flexed position, were found atop a small ridge on property owned by the Schaffer Lumber Company. Police investigated the site and collected the human remains. The police sent the remains to the University of Michigan's Anatomy Department where they were determined to be Native American. On October 7, 1965, archeologists John Halsey and Richard Wilkinson of the UMMA visited the site and collected more human remains. They were able to identify the burial pit and draw a vertical profile of the pit showing the individual had been buried on an east-west axis. The human remains collected by the police and the archeologists were donated to the UMMA in 1966. The human remains date to the Pre-Contact Period. No known individuals were identified. No associated funerary objects are present.

Prior to 1933, human remains representing, at minimum, 1 individual were removed from the GL–2022 site (20WA1) in Washtenaw County, MI. A landowner discovered the remains of a young adult female on his property located near Dexter, MI, and gave them to Wilbert Hinsdale of the UMMA. No date or time period for the human remains could be established. No known individuals were identified. No associated funerary objects are present.

On April 18, 1946, human remains representing, at minimum, 2 individuals were removed from the Pong site (20WA13) in Washtenaw County, MI. A landowner collected the remains of two adults (one of them female) while digging a basement, and donated them to the UMMA. No date or time period for the human remains could be established. No known individuals were identified. No associated funerary objects are present.

In 1956, human remains representing, at minimum, 8 individuals were removed from the Ford Lake site (20WA80) in Washtenaw County, MI. The burials were discovered during gravel pit operations near Ford Lake. Emerson Greenman of the UMMA collected the commingled human remains of three adult females, two adult males, one older adult male, one adolescent, and one child. One individual was noted as being buried in a flexed position, while another individual was noted as being buried in an extended position. No date or time period for the human remains could be established. No known individuals were identified. No associated funerary objects are present.

On August 11, 1960, human remains representing, at minimum, 1 individual were removed from the Ellis Road site in Washtenaw County, MI. The remains of one child were discovered during gravel pit operations near Ypsilanti, MI. A Michigan State Police Officer brought the collected human remains to the UMMA, where they were identified as Native American. The landowners subsequently donated the collections to the museum. No date or time period for the human remains could be established. No known individuals were identified. No associated funerary objects are present.

Between May 24, 1932, and March 5, 1933, human remains representing, at minimum, 22 individuals were removed from the Huron River #1 site (20WA4) in Washtenaw County, MI. The burials were found during gravel pit operations near Ford Lake on land owned by the Ford Motor Company. Amateur archeologists excavated the remains of nine adults (one of whom had been cremated), seven infants/neonates, and six juveniles, along with six associated funerary objects, and donated these collections to the UMMA. The human remains date to the Early Late Woodland Period (500–900 A.D.) based on diagnostic artifacts and mortuary

treatment. No known individuals were identified. The 6 associated funerary objects present are one ceramic vessel and five projectile points.

On July 29, 1985, human remains representing, at minimum, 5 individuals were removed from the Home Depot site (20WA176) in Washtenaw County, MI. The remains of two adults, two juveniles, and one infant were found during land development activities associated with a retail store. Archeologists from Michigan State University excavated the site between July 29 and August 16, 1985. Three of the individuals were noted as being buried in a tightly flexed position, lying on their left sides, and oriented toward either the east or northeast. There were also two small shells found buried in association with the infant. The collection was donated to the UMMA. The human remains date to the Early Late Woodland period (900–1200 A.D.) based on mortuary treatment and diagnostic artifacts. No known individuals were identified. The 2 associated funerary objects present are two small shells.

In the summer of 1976, human remains representing, at minimum, 4 individuals were removed from the Staebler site (20WA40) in Washtenaw County, MI. Archeologists from Schoolcraft Community College and the UMMA jointly excavated a site near Highway M–14, where human remains had been found on the surface of the ground. Some of the remains had been cremated. The excavation focused on the recovery of archeological remains from the surface and plow zone. The archeologists collected the remains of three adults and one sub-adult, along with one associated funerary object. The human remains date to the Late Woodland Period (500–1400 A.D.) based on a projectile point found with the remains. No known individuals were identified. The 1 associated funerary object present is a projectile point.

In 1978, human remains representing, at minimum, 1 individual were removed from the Olson site (20WA111) in Washtenaw County, MI. Experts from the UMMA excavated human remains from a site located near the Huron River. An older adult male was found buried in a semi-flexed, slumped position with 47 associated funerary objects. The human remains date to the Early Late Woodland Period (500–900 A.D.) based on diagnostic objects. No known individuals were identified. The 47 funerary objects present are 1 unworked deer scapula, 3 worked animal bones, 1 unworked turkey bone, 5 slate discs, 2 chert cores, 2 chert flakes, 1 chert triangular biface, 2 chert blades, 1 chert drill, 1 beaver tooth, 2 stone abraders, 1 mussel shell, 23 ceramic sherds, 1 groundstone pendant, and 1 argillite disc.

In July 1959, human remains representing, at minimum, 1 individual were removed from the Ann Arbor Water Department site (20WA284) in Washtenaw County, MI. City workers engaged in road construction activities unearthed the remains of one adult and contacted the Ann Arbor Police Department. The police collected the human remains and transferred them to the UMMA. After experts at the museum identified the human remains as being Native American, they were donated to the UMMA. No date or time period for the human remains could be established. No known individuals were identified. No associated funerary objects are present.

In 1952, human remains representing, at minimum, 3 individuals were removed from the Duke Site (20WA71) in Washtenaw County, MI. Landowners unearthed human remains while digging a basement for their house. They contacted the Washtenaw County Sherriff's Department. Deputies collected the commingled human remains and sent them to Howard Buettner and Emerson Greenman, at the UMMA, for identification. Greenman determined the remains to be Native American and to represent one middle-aged adult female, one cremated adult, and one adolescent. The landowners donated the collections to the UMMA. The human remains date to the Woodland-Late Pre-Contact Period (500–1610 A.D.) based on diagnostic artifacts from a non-burial area of the overall site. No known individuals were identified. No associated funerary objects are present.

On October 4, 1994, human remains representing, at minimum, 1 individual were removed from the Kuclo site (20WA289) in Washtenaw County, MI. A backhoe operator found the remains in displaced dirt during construction activities associated with a housing development. The Michigan State Police and Washtenaw County Medical Examiner were contacted to investigate the site. They subsequently contacted Russell Nelson of the UMMA, who collected the human remains along with 23 associated funerary objects. The remains of one adult female were identified as Native American. The collection was ultimately donated to the UMMA. The human remains date to the Late Woodland Period (900–1400 A.D.) based on diagnostic objects. No known individuals were identified. The 23 associated funerary objects present are 7 deer bone fragments, 13 ceramic sherds, 2 lithic shatter flakes, and 1 retouched lithic shatter flake.

On September 1, 1998, human remains representing, at minimum, 1 individual were removed from the Brandon Home site (20WA336) in Washtenaw County, MI. The human remains were found during construction activities in a subdivision of Ann Arbor, MI. The remains of a middle-aged female were found inside a stone-lined chamber, with stones stacked and layered to form a roof. The individual was in supine position, with hands folded over the chest and legs drawn upward. Near the left side of the body, 71 associated funerary objects were found. The human remains date to the Early Late Woodland Period (500–1100 A.D.) based on diagnostic objects. No known individuals were identified. The 71 associated funerary objects present are 1 modified animal bone, 1 lot of small animal bones, 3 animal bone fragments, 1 hoe (made from an elk scapula), 1 slate knife, 1 end scraper, 1 quartz flake, 4 retouched flakes, 1 lot of charcoal, 1 shell fragment, and 56 shell fragments (which include aquatic and terrestrial shells).

In 1996, human remains representing, at minimum, 4 individuals were removed from the Nichols Home site (20WA317) in Washtenaw County, MI. Landowners unearthed human remains while digging a basement for their house. The Washtenaw County Medical Examiner was contacted to investigate the site, and determined the remains were Native American. The Medical Examiner contacted the UMMA to conduct a salvage excavation. A backhoe had removed some of the remains. These were collected from the backfill dirt. Additional remains were also collected from portions of the landowner's yard and driveway that had been graded. Faunal remains found in association with the human remains are reported as associated funerary objects. The remains collected represent one adult, one adolescent, one infant, and one perinate. The human remains date to the Archaic Period (7500–100 B.C.) based on the presence of red ochre. No known individuals were identified. The 2 associated funerary objects are 2 lots of faunal bones representing the remains of a dog and a woodchuck.

Determinations Made by the University of Michigan Museum of Anthropology

Officials of the University of Michigan Museum of Anthropology have determined that:

- Pursuant to 25 U.S.C. 3001(9), the human remains described in this notice are Native American based on cranial morphology, dental traits, accession

documentation, and archeological context.

• Pursuant to 25 U.S.C. 3001(9), the human remains described in this notice represent the physical remains of 95 individuals of Native American ancestry.

• Pursuant to 25 U.S.C. 3001(3)(A), the 152 objects described in this notice are reasonably believed to have been placed with or near individual human remains at the time of death or later as part of the death rite or ceremony.

• Pursuant to 25 U.S.C. 3001(2), a relationship of shared group identity cannot be reasonably traced between the Native American human remains and associated funerary objects and any present-day Indian tribe.

• According to final judgments of the Indian Claims Commission or the Court of Federal Claims, the land from which the Native American human remains and associated funerary objects were removed is the aboriginal land of the Bad River Band of the Lake Superior Tribe of Chippewa Indians of the Bad River Reservation, Wisconsin; Bay Mills Indian Community, Michigan; Bois Forte Band (Nett Lake) of the Minnesota Chippewa Tribe, Minnesota; Chippewa-Cree Indians of the Rocky Boy's Reservation, Montana; Citizen Potawatomi Nation, Oklahoma; Fond du Lac Band of the Minnesota Chippewa Tribe, Minnesota; Forest County Potawatomi Community, Wisconsin; Grand Portage Band of the Minnesota Chippewa Tribe, Minnesota; Grand Traverse Band of Ottawa and Chippewa Indians, Michigan; Hannahville Indian Community, Michigan; Keweenaw Bay Indian Community, Michigan; Lac Courte Oreilles Band of Lake Superior Chippewa Indians of Wisconsin; Lac du Flambeau Band of Lake Superior Chippewa Indians of the Lac du Flambeau Reservation of Wisconsin; Lac Vieux Desert Band of Lake Superior Chippewa Indians of Michigan; Leech Lake Band of the Minnesota Chippewa Tribe, Minnesota; Match-e-be-nash-she-wish Band of Pottawatomi Indians of Michigan; Mille Lacs Band of the Minnesota Chippewa Tribe, Minnesota; Nottawaseppi Huron Band of the Potawatomi, Michigan (previously listed as the Huron Potawatomi, Inc.); Pokagon Band of Potawatomi Indians, Michigan and Indiana; Prairie Band Potawatomi Nation (previously listed as the Prairie Band of Potawatomi Nation, Kansas); Quechan Tribe of the Fort Yuma Indian Reservation, California & Arizona; Red Cliff Band of Lake Superior Chippewa Indians of Wisconsin; Red Lake Band of Chippewa Indians, Minnesota; Saginaw Chippewa Indian Tribe of Michigan; Sault Ste. Marie Tribe of Chippewa Indians, Michigan; Sokaogon Chippewa Community, Wisconsin; St. Croix Chippewa Indians of Wisconsin; Turtle Mountain Band of Chippewa Indians of North Dakota; and the White Earth Band of the Minnesota Chippewa Tribe, Minnesota.

• Treaties, Acts of Congress, or Executive Orders, indicate that the land from which the Native American human remains and associated funerary objects were removed is the aboriginal land of Bad River Band of the Lake Superior Tribe of Chippewa Indians of the Bad River Reservation, Wisconsin; Bay Mills Indian Community, Michigan; Bois Forte Band (Nett Lake) of the Minnesota Chippewa Tribe, Minnesota; Chippewa-Cree Indians of the Rocky Boy's Reservation, Montana; Citizen Potawatomi Nation, Oklahoma; Fond du Lac Band of the Minnesota Chippewa Tribe, Minnesota; Forest County Potawatomi Community, Wisconsin; Grand Portage Band of the Minnesota Chippewa Tribe, Minnesota; Grand Traverse Band of Ottawa and Chippewa Indians, Michigan; Hannahville Indian Community, Michigan; Keweenaw Bay Indian Community, Michigan; Lac Courte Oreilles Band of Lake Superior Chippewa Indians of Wisconsin; Lac du Flambeau Band of Lake Superior Chippewa Indians of the Lac du Flambeau Reservation of Wisconsin; Lac Vieux Desert Band of Lake Superior Chippewa Indians of Michigan; Leech Lake Band of the Minnesota Chippewa Tribe, Minnesota; Little River Band of Ottawa Indians, Michigan; Little Traverse Bay Bands of Odawa Indians, Michigan; Match-e-be-nash-she-wish Band of Pottawatomi Indians of Michigan; Mille Lacs Band of the Minnesota Chippewa Tribe, Minnesota; Nottawaseppi Huron Band of the Potawatomi, Michigan (previously listed as the Huron Potawatomi, Inc.); Ottawa Tribe of Oklahoma; Pokagon Band of Potawatomi Indians, Michigan and Indiana; Prairie Band Potawatomi Nation (previously listed as the Prairie Band of Potawatomi Nation, Kansas); Quechan Tribe of the Fort Yuma Indian Reservation, California & Arizona; Red Cliff Band of Lake Superior Chippewa Indians of Wisconsin; Red Lake Band of Chippewa Indians, Minnesota; Saginaw Chippewa Indian Tribe of Michigan; Sault Ste. Marie Tribe of Chippewa Indians, Michigan; Sokaogon Chippewa Community, Wisconsin; St. Croix Chippewa Indians of Wisconsin; Turtle Mountain Band of Chippewa Indians of North Dakota; White Earth Band of the Minnesota Chippewa Tribe, Minnesota; and the Wyandotte Nation.

• Pursuant to 43 CFR 10.11(c)(1), the disposition of the human remains and associated funerary objects may be to The Tribes.

Additional Requestors and Disposition

Representatives of any Indian tribe or Native Hawaiian organization not identified in this notice that wish to request transfer of control of these human remains and associated funerary objects should submit a written request with information in support of the request to Dr. Ben Secunda, NAGPRA Project Manager, University of Michigan, Office of the Vice President for Research, 4080 Fleming Building, 503 Thompson St., Ann Arbor, MI 48109–1340, telephone (734) 647–9085, email *bsecunda@umich.edu,* by December 2, 2013. After that date, if no additional requestors have come forward, transfer of control of the human remains and associated funerary objects to The Tribes may proceed.

The University of Michigan is responsible for notifying The Tribes that this notice has been published.

Dated: September 16, 2013.

Sherry Hutt,

Manager, National NAGPRA Program.

[FR Doc. 2013–26007 Filed 10–30–13; 8:45 am]

BILLING CODE 4312–50–P

DEPARTMENT OF THE INTERIOR

National Park Service

[NPS–WASO–NAGPRA–14036; PPWOCRADN0–PCU00RP14.R50000]

Notice of Inventory Completion: University of Michigan, Ann Arbor, MI

AGENCY: National Park Service, Interior.

ACTION: Notice.

SUMMARY: The University of Michigan has completed an inventory of human remains, in consultation with the appropriate Indian tribes or Native Hawaiian organizations, and has determined that there is no cultural affiliation between the human remains and any present-day Indian tribes or Native Hawaiian organizations. Representatives of any Indian tribe or Native Hawaiian organization not identified in this notice that wish to request transfer of control of these human remains should submit a written request to the University of Michigan. If no additional requestors come forward, transfer of control of the human remains to the Indian tribes or Native Hawaiian organizations stated in this notice may proceed.

DATES: Representatives of any Indian tribe or Native Hawaiian organization not identified in this notice that wish to

request transfer of control of these human remains should submit a written request with information in support of the request to the University of Michigan at the address in this notice by December 2, 2013.

ADDRESSES: Dr. Ben Secunda, NAGPRA Project Manager, University of Michigan, Office of the Vice President for Research, 4080 Fleming Building, 503 Thompson St., Ann Arbor, MI 48109–1340, telephone (734) 647–9085, email *bsecunda@umich.edu*.

SUPPLEMENTARY INFORMATION: Notice is here given in accordance with the Native American Graves Protection and Repatriation Act (NAGPRA), 25 U.S.C. 3003, of the completion of an inventory of human remains under the control of the University of Michigan, Ann Arbor, MI. The human remains were removed from Alpena, Isabella, Grand Traverse, Lake, Leelanau, Montcalm, Montmorency, Newaygo, Roscommon, and Wexford Counties, MI.

This notice is published as part of the National Park Service's administrative responsibilities under NAGPRA, 25 U.S.C. 3003(d)(3) and 43 CFR 10.11(d). The determinations in this notice are the sole responsibility of the museum, institution, or Federal agency that has control of the Native American human remains. The National Park Service is not responsible for the determinations in this notice.

Consultation

A detailed assessment of the human remains was made by the University of Michigan Museum of Anthropology professional staff in consultation with representatives of the Bay Mills Indian Community, Michigan; Chippewa-Cree Indians of the Rocky Boy's Reservation, Montana; Grand Traverse Band of Ottawa and Chippewa Indians, Michigan; Keweenaw Bay Indian Community, Michigan; Lac Vieux Desert Band of Lake Superior Chippewa Indians of Michigan; Little River Band of Ottawa Indians, Michigan; Little Traverse Bay Bands of Odawa Indians, Michigan; Saginaw Chippewa Indian Tribe of Michigan; and the Sault Ste. Marie Tribe of Chippewa Indians, Michigan.

Additional requests for consultation were sent to the Bad River Band of the Lake Superior Tribe of Chippewa Indians of the Bad River Reservation, Wisconsin; Bois Forte Band (Nett Lake) of the Minnesota Chippewa Tribe, Minnesota; Fond du Lac Band of the Minnesota Chippewa Tribe, Minnesota; Grand Portage Band of the Minnesota Chippewa Tribe, Minnesota; Lac Courte Oreilles Band of Lake Superior Chippewa Indians of Wisconsin; Lac du Flambeau Band of Lake Superior Chippewa Indians of the Lac du Flambeau Reservation of Wisconsin; Leech Lake Band of the Minnesota Chippewa Tribe, Minnesota; Mille Lacs Band of the Minnesota Chippewa Tribe, Minnesota; Ottawa Tribe of Oklahoma; Red Cliff Band of Lake Superior Chippewa Indians of Wisconsin; Red Lake Band of Chippewa Indians, Minnesota; Sokaogon Chippewa Community, Wisconsin; St. Croix Chippewa Indians of Wisconsin; Turtle Mountain Band of Chippewa Indians of North Dakota; and the White Earth Band of the Minnesota Chippewa Tribe, Minnesota.

Hereafter, all tribes listed in this section are referred to as ''The Tribes.''

History and description of the remains

On an unknown date prior to 1875, human remains representing, at minimum, 1 individual were removed from the Devil River Mound site (20AL1) in Alpena County, MI. A resident of Ossineke, MI, collected a cranial fragment of one adult (possibly female) sometime before he moved to Ann Arbor, MI. After moving, he donated the human remains to the University of Michigan Museum of Anthropology (UMMA). The cranial fragment has evidence of a drilled perforation made post-mortem. The human remains date to the Late Woodland Period (500–1400 A.D.) based on mortuary treatment. No known individuals were identified. No associated funerary objects are present.

In October 1925, human remains representing, at minimum, 1 individual were removed from the Fred Wilder site (20IB7) in Isabella County, MI. An amateur archeologist excavated a series of mounds and a row of pits located approximately 200 yards away from the mounds in Lincoln Township, MI. The remains of one adult (possibly female) were removed from one of the mounds and subsequently donated to the UMMA. The individual was buried lying on her right side, fully extended, with her left arm flexed and left hand resting over her face. A ceramic bowl was reportedly removed from this mound as well, but it was not donated to the museum. The human remains date to the Woodland Period (850 B.C.–1400 A.D.) based on mortuary treatment. No known individuals were identified. No associated funerary objects are present.

Sometime between July and August of 1965, human remains representing, at minimum, 3 individuals were removed from the Fife Lake site (20GT25) in Grand Traverse County, MI. F.V. Brunett of the UMMA excavated a mound near Dollar Lake and collected remains from at least three children. He also noted soil disturbance from looters during his excavation. The human remains date to the Early-to-Middle Late Woodland Period (500–1200 A.D.) based on mortuary treatment. No known individuals were identified. No associated funerary objects are present.

On August 30, 1928, human remains representing, at minimum, 3 individuals were removed from the Noud Lake site (20LK5) in Lake County, MI. Wilbert Hinsdale of the UMMA excavated the remains of one older adult male, one adult, and one child from a mound near Noud Lake. The human remains date to the Woodland Period (850 B.C.–1400 A.D.) based on mortuary treatment. No known individuals were identified. No associated funerary objects are present.

In 1940, human remains representing, at minimum, 2 individuals were removed from the Round Top site (20LU63) in Leelanau County, MI. A local resident collected the remains of two adults (one an older male) from a mound along the lakeshore near Leland, MI. The human remains date to the Woodland Period (850 B.C.–1400 A.D.) based on mortuary treatment. No known individuals were identified. No associated funerary objects are present.

In 1938, human remains representing, at minimum, 1 individual were removed from the Crystal Lake site in Montcalm County, MI. A landowner collected the remains of one adult female from a gravel pit near Crystal Lake and donated the remains to the UMMA. No date or time period for the human remains could be established. No known individuals were identified. No associated funerary objects are present.

On April 25, 1927, human remains representing, at minimum, 3 individuals were removed from the Lunden site (20MY3) in Montmorency County, MI. A landowner removed the remains of three adults from one of seven mounds located on his property along near West Twin Lake. He donated some of the collected human remains to Wilbert Hinsdale of the UMMA. It is not known whether the landowner collected any objects associated with the burial, but none were donated to the UMMA. The human remains date to the Early Late Woodland Period (600–1100 A.D.) based on mortuary treatment and artifacts found during a subsequent excavation of a separate site. No known individuals were identified. No associated funerary objects are present.

In September 1957, human remains representing, at minimum, 13 individuals were removed from the Croton Bluff Mound site (20NE102) in

Newaygo County, MI. Amateur archeologists excavated three mounds, located on private land, near the backwater of Croton Dam. The remains of nine adults, two children, and two cremated individuals were collected. The first mound showed signs of extensive looting and contained one adult female, buried in a semi-flexed position. The second mound contained two burial pits with a total five individuals, including two adult males, one adult, possibly female, and two cremated individuals. One of the burial pits contained a celt, but it was not donated to the UMMA. The third mound contained the commingled remains of at least four individuals, including three adults and one cremated individual. Additionally, the commingled remains of three individuals were collected from the site, including one adult female, partially burned, and two children, but the particular burial mound from which they were removed is unknown. The human remains date to the Late Woodland Period (800–1400 A.D.) based on mortuary treatment. No known individuals were identified. No associated funerary objects are present.

In the summer of 2004, human remains representing, at minimum, 1 individual were removed from the Cut River Mounds site (20RO01) in Roscommon County, MI. Meghan Howey of the UMMA excavated a multicomponent site comprised of two mounds near the Cut River and Houghton Lake. The remains of one adult were found in four different excavation trenches made near a mound. The overall site spanned the Middle Woodland to the Late Late Woodland Periods (380–1600 A.D.). No known individuals were identified. No associated funerary objects are present.

On an unknown date prior to 1964, human remains representing, at minimum, 1 individual were removed from the Houghton Police Department site in Roscommon County, MI. The Houghton Police Department sent the remains of one adult to the UMMA for identification. The museum concluded that the remains were Native American, and the human remains were subsequently donated to the UMMA in 1964. The remains have no provenience and are believed to be from the Houghton Lake area where other Native American burials have been identified. No date or time period for the human remains could be established. No known individuals were identified. No associated funerary objects are present.

On an unknown date prior to 1924, human remains representing, at minimum, 1 individual were removed from the Cadillac site in Wexford County, MI. The Wexford County Coroner collected the remains of one middle-aged female from an unspecified mound near Cadillac, MI. He donated them to the UMMA in 1924. No date or time period for the human remains could be established. No known individuals were identified. No associated funerary objects are present.

Determinations made by the University of Michigan Museum of Anthropology

Officials of the University of Michigan Museum of Anthropology have determined that:

- Pursuant to 25 U.S.C. 3001(9), the human remains described in this notice are Native American based on cranial morphology, dental traits, accession documentation, and archeological context.
- Pursuant to 25 U.S.C. 3001(9), the human remains described in this notice represent the physical remains of 30 individuals of Native American ancestry.
- Pursuant to 25 U.S.C. 3001(2), a relationship of shared group identity cannot be reasonably traced between the Native American human remains and any present-day Indian tribe.
- According to final judgments of the Indian Claims Commission or the Court of Federal Claims, the land from which the Native American human remains were removed is the aboriginal land of The Tribes.
- Treaties, Acts of Congress, or Executive Orders, indicate that the land from which the Native American human remains were removed is the aboriginal land of The Tribes.
- Pursuant to 43 CFR 10.11(c)(1), the disposition of the human remains may be to The Tribes.

Additional Requestors and Disposition

Representatives of any Indian tribe or Native Hawaiian organization not identified in this notice that wish to request transfer of control of these human remains should submit a written request with information in support of the request to Dr. Ben Secunda, NAGPRA Project Manager, University of Michigan, Office of the Vice President for Research, 4080 Fleming Building, 503 Thompson St., Ann Arbor, MI 48109–1340, telephone (734) 647–9085, email *bsecunda@umich.edu*, by December 2, 2013. After that date, if no additional requestors have come forward, transfer of control of the human remains and associated funerary objects to The Tribes may proceed.

The University of Michigan is responsible for notifying The Tribes that this notice has been published.

Dated: September 16, 2013.

Sherry Hutt,

Manager, National NAGPRA Program.

[FR Doc. 2013–25999 Filed 10–30–13; 8:45 am]

BILLING CODE 4312–50–P

DEPARTMENT OF THE INTERIOR

National Park Service

[NPS–WASO–NAGPRA–14040; PPWOCRADN0–PCU00RP14.R50000]

Notice of Inventory Completion: University of Michigan, Ann Arbor, MI

AGENCY: National Park Service, Interior.

ACTION: Notice.

SUMMARY: The University of Michigan has completed an inventory of human remains, in consultation with the appropriate Indian tribes or Native Hawaiian organizations, and has determined that there is no cultural affiliation between the human remains and any present-day Indian tribes or Native Hawaiian organizations. Representatives of any Indian tribe or Native Hawaiian organization not identified in this notice that wish to request transfer of control of these human remains should submit a written request to the University of Michigan. If no additional requestors come forward, transfer of control of the human remains to the Indian tribes or Native Hawaiian organizations stated in this notice may proceed.

DATES: Representatives of any Indian tribe or Native Hawaiian organization not identified in this notice that wish to request transfer of control of these human remains should submit a written request with information in support of the request to the University of Michigan at the address in this notice by December 2, 2013.

ADDRESSES: Dr. Ben Secunda, NAGPRA Project Manager, University of Michigan, Office of the Vice President for Research, 4080 Fleming Building, 503 Thompson St., Ann Arbor, MI 48109–1340, telephone (734) 647–9085, email *bsecunda@umich.edu.*

SUPPLEMENTARY INFORMATION: Notice is here given in accordance with the Native American Graves Protection and Repatriation Act (NAGPRA), 25 U.S.C. 3003, of the completion of an inventory of human remains under the control of the University of Michigan, Ann Arbor, MI. The human remains were removed from Saginaw County, MI.

This notice is published as part of the National Park Service's administrative responsibilities under NAGPRA, 25 U.S.C. 3003(d)(3) and 43 CFR 10.11(d).

The determinations in this notice are the sole responsibility of the museum, institution, or Federal agency that has control of the Native American human remains. The National Park Service is not responsible for the determinations in this notice.

Consultation

A detailed assessment of the human remains was made by the University of Michigan Museum of Anthropology professional staff in consultation with representatives of the Bay Mills Indian Community, Michigan; Chippewa-Cree Indians of the Rocky Boy's Reservation, Montana; Grand Traverse Band of Ottawa and Chippewa Indians, Michigan; Keweenaw Bay Indian Community, Michigan; Lac Vieux Desert Band of Lake Superior Chippewa Indians of Michigan; Saginaw Chippewa Indian Tribe of Michigan; and the Sault Ste. Marie Tribe of Chippewa Indians, Michigan.

Additional requests for consultation were sent to the Bad River Band of the Lake Superior Tribe of Chippewa Indians of the Bad River Reservation, Wisconsin; Bois Forte Band (Nett Lake) of the Minnesota Chippewa Tribe, Minnesota; Fond du Lac Band of the Minnesota Chippewa Tribe, Minnesota; Grand Portage Band of the Minnesota Chippewa Tribe, Minnesota; Kickapoo Traditional Tribe of Texas; Kickapoo Tribe of Indians of the Kickapoo Reservation in Kansas; Kickapoo Tribe of Oklahoma; Lac Courte Oreilles Band of Lake Superior Chippewa Indians of Wisconsin; Lac du Flambeau Band of Lake Superior Chippewa Indians of the Lac du Flambeau Reservation of Wisconsin; Leech Lake Band of the Minnesota Chippewa Tribe, Minnesota; Mille Lacs Band of the Minnesota Chippewa Tribe, Minnesota; Red Cliff Band of Lake Superior Chippewa Indians of Wisconsin; Red Lake Band of Chippewa Indians, Minnesota; Sac & Fox Nation of Missouri in Kansas and Nebraska; Sac & Fox Nation, Oklahoma; Sac & Fox Tribe of the Mississippi in Iowa; Sokaogon Chippewa Community, Wisconsin; St. Croix Chippewa Indians of Wisconsin; Turtle Mountain Band of Chippewa Indians of North Dakota; and the White Earth Band of the Minnesota Chippewa Tribe, Minnesota.

Hereafter, all tribes listed in this section are referred to as ''The Tribes.''

History and Description of the Remains

On an unknown date between 1915 and 1950, human remains representing, at minimum, 5 individuals were removed from the Green Point site (20SA1) in Saginaw County, MI. An amateur archeologist collected the commingled remains of five adults from the surface of the ground and donated them to the University of Michigan Museum of Anthropology (UMMA). One cranium shows evidence of cradle boarding. No date or time period for the human remains could be established. No known individuals were identified. No associated funerary objects are present.

On an unknown date in the 1930s, human remains representing, at minimum, 1 individual were removed from the Vogelaar site (20SA330) in Saginaw County, MI. An amateur archeologist collected the remains of an infant from the surface of the ground as part of an archeological survey in a plowed agricultural field. He donated the human remains to the UMMA in 1978. During the 1960s, archaeologists from the UMMA conducted excavations in the area of this site and found evidence of a Native American habitation area, but no human remains were discovered. The infant's remains are believed to be associated with the habitation area. The human remains are believed to date to the Middle-to-Late Woodland Period (300 B.C.–1400 A.D.) based on diagnostic artifacts collected from the associated habitation area. No known individuals were identified. No associated funerary objects are present.

On an unknown date between 1915 and 1950, human remains representing, at minimum, 1 individual were removed from the Cavanaugh site (20SA19) in Saginaw County, MI. An amateur archeologist collected the remains of one adult from the surface of the ground near Gratiot Road and donated them to the UMMA in 1957. No date or time period for the human remains could be established. No known individuals were identified. No associated funerary objects are present.

On an unknown date between 1915 and 1950, human remains representing, at minimum, 1 individual, were removed from the Mound Hill site (20SA26) in Saginaw County, MI. An amateur archeologist collected an adult foot phalanx from the surface of the ground. On an unknown date between 1950 and November 13, 1990, these human remains were donated to the UMMA. The human remains date to the Pre-Contact Period (9150 B.C.-1640 A.D.) based on documentation of a mound at the site. No known individuals were identified. No associated funerary objects are present.

On an unknown date prior to 1941, human remains representing, at minimum, 1 individual were removed from the Fisher site (20SA29) in Saginaw County, MI. A local resident collected the remains of one adult from the surface at a location in Bridgeport Township. The human remains were given to an amateur archeologist in 1950, who subsequently donated them to the UMMA. No date or time period for the human remains could be established. No known individuals were identified. No associated funerary objects are present.

In 1913, human remains representing, at minimum, 1 individual were removed from the Huron Valley Cemetery site (20SA36) in Saginaw County, MI. A local farmer and his sons collected the remains of a middle-aged female from the surface of the ground in one of their agricultural fields somewhere near the Cass River. They gave the human remains to an amateur archeologist who subsequently donated them to the UMMA in 1932. A projectile point was found embedded on the anterior blade of the female's right ilium. The projectile point is still present and will be kept with the human remains, but it is not believed to be an associated funerary object. The human remains date to the Late Woodland Period (500–1400 A.D.) based on the projectile point. No known individuals were identified. No associated funerary objects are present.

On an unknown date between 1915 and 1950, human remains representing, at minimum, 1 individual were removed from the Letterman site (20SA41) in Saginaw County, MI. An amateur archaeologist collected the remains of one adult from the surface of the ground near the Cass River and donated them to the UMMA. No date or time period for the human remains could be established. No known individuals were identified. No associated funerary objects are present.

On an unknown date between 1915 and 1950, human remains representing, at minimum, 1 individual were removed from the Sand Ridge site (20SA69) in Saginaw County, MI. An amateur archeologist collected the remains of one adult (probably female) from the surface of the ground near the Pere Marquette Railroad and donated them to the UMMA. Grave looters were known to have visited the area frequently. The human remains date to the Pre-Contact Period (9150 B.C.–1400 A.D.) based on diagnostic artifacts that are not in the UMMA's collections, but are known to have come from the site. No known individuals were identified. No associated funerary objects are present.

On an unknown date in the 1920s, human remains representing, at minimum, 1 individual was removed from the Dead Creek site (20SA34) in Saginaw County, MI. An amateur archeologist collected the remains of

one adult on the surface near Dead Creek in Frankenmuth Township and donated them to the UMMA in 1932. He reported finding evidence of a Native American village in the vicinity, also located near Dead Creek. Researcher H.I. Smith also reported a Pre-Contact Period cemetery, designated as the Simons Cemetery, located in the vicinity. The human remains date to the Pre-Contact Period (8500 B.C.–1400 A.D.) based on the Smith reference. No known individuals were identified. No associated funerary objects are present.

On an unknown date, human remains representing, at minimum, 4 individuals were removed from Near Saginaw site in Saginaw County, MI. The remains were found among the UMMA's collections in 1993 during NAGPRA compliance activities. The remains of two adults, one adolescent, and one child were determined to be Native American based on cranial morphology. No date or time period could be established. No known individuals were identified. No associated funerary objects are present.

On an unknown date in the 1930s, human remains representing, at minimum, 1 individual were removed from the Nason Hill site (20SA121) in Saginaw County, MI. An amateur archeologist collected the human remains, found among a mixture of surface assemblages with no archeological contexts, and donated them to the UMMA in 1978. No date or time period for the human remains could be established. No known individuals were identified. No associated funerary objects are present.

Determinations Made by the University of Michigan Museum of Anthropology

Officials of the University of Michigan Museum of Anthropology have determined that:

- Pursuant to 25 U.S.C. 3001(9), the human remains described in this notice are Native American based on cranial morphology, dental traits, accession documentation, and archeological context.
- Pursuant to 25 U.S.C. 3001(9), the human remains described in this notice represent the physical remains of 18 individuals of Native American ancestry.
- Pursuant to 25 U.S.C. 3001(2), a relationship of shared group identity cannot be reasonably traced between the Native American human remains and any present-day Indian tribe.
- According to final judgments of the Indian Claims Commission or the Court of Federal Claims, the land from which the Native American human remains were removed is the aboriginal land of the Saginaw Chippewa Indian Tribe of Michigan.
- Treaties, Acts of Congress, or Executive Orders, indicate that the land from which the Native American human remains were removed is the aboriginal land of The Tribes.
- Pursuant to 43 CFR 10.11(c)(1), the disposition of the human remains may be to The Tribes.

Additional Requestors and Disposition

Representatives of any Indian tribe or Native Hawaiian organization not identified in this notice that wish to request transfer of control of these human remains should submit a written request with information in support of the request to Dr. Ben Secunda, NAGPRA Project Manager, University of Michigan, Office of the Vice President for Research, 4080 Fleming Building, 503 Thompson St., Ann Arbor, MI 48109–1340, telephone (734) 647–9085, email *bsecunda@umich.edu*, by December 2, 2013. After that date, if no additional requestors have come forward, transfer of control of the human remains to The Tribes may proceed.

The University of Michigan is responsible for notifying The Tribes that this notice has been published.

Dated: September 16, 2013.

Sherry Hutt,

Manager, National NAGPRA Program.

[FR Doc. 2013–25983 Filed 10–30–13; 8:45 am]

BILLING CODE 4312–50–P

DEPARTMENT OF JUSTICE

Notice of Lodging of Consent Decree Pursuant to the Clean Water Act

On September 30, 2013, the Department of Justice lodged a proposed Consent Decree (''Decree'') in the United States District Court for the Western District of Tennessee in the lawsuit entitled *United States of America* v. *ConAgra Foods, Inc., and ConAgra Grocery Products, LLC,* Civil Action No. 2:13–cv–02756. This is a revised notice from the one that was published on October 22, 2013, Vol. 78, No. 204, pages 62661–62662.

This Decree represents a settlement of claims against the Defendants ConAgra Foods, Inc., and ConAgra Grocery Products, LLC (''Defendants'' or ''ConAgra'') for violations of the Clean Water Act, 33 U.S.C. 1321, and Spill Prevention, Control and Countermeasure (''SPCC'') and Facility Response Plan (''FRP'') regulations found at 40 CFR Part 112. The Decree requires that the Defendants pay a civil penalty of $475,000. The Decree further requires that ConAgra implement a formal tank integrity testing program in accordance with the American Petroleum Institute's (''API'') formal standard 653. ConAgra will be required to submit a report annually to EPA summarizing the status of the tank testing and identifying which tanks were inspected during the previous calendar year and which will be inspected in the current year. The Decree provides for stipulated penalties in the event the Defendants fail to comply with the Decree's requirements.

The publication of this notice opens a period for public comment on the Consent Decree. Comments should be addressed to the Assistant Attorney General, Environment and Natural Resources Division, and should refer to *United States* v. *ConAgra Foods, Inc., and ConAgra Grocery Products, LLC,* Civil Action No. 2:13–cv–02756, D.J. Ref. No. 90–5–1–1–10403. All comments must be submitted no later than thirty (30) days after the publication date of this notice. Comments may be submitted either by email or by mail:

To submit comments:	Send them to:
By email	*pubcomment-ees.enrd@usdoj.gov.*
By mail	Assistant Attorney General, U.S. DOJ—ENRD, P.O. Box 7611, Washington, DC 20044–7611.

During the public comment period, the Consent Decree may be examined and downloaded at this Justice Department Web site: *http://www.usdoj.gov/enrd/Consent_Decrees.html.* We will provide a paper copy of the Consent Decree upon written request and payment of reproduction costs. Please mail your request and payment to: Consent Decree Library, U.S. DOJ—ENRD, P.O. Box 7611, Washington, DC 20044–7611.

Please enclose a check or money order for $6.25 (25 cents per page reproduction cost) payable to the United States Treasury for the Consent Decree.

Henry S. Friedman,

Assistant Section Chief, Environmental Enforcement Section, Environment and Natural Resources Division.

[FR Doc. 2013–25856 Filed 10–30–13; 8:45 am]

BILLING CODE 4410–15–P

DEPARTMENT OF JUSTICE

Notice of Lodging of Proposed Consent Decree Under the Safe Drinking Water Act

On Wednesday, October 23, 2013, the Department of Justice lodged a proposed Consent Decree with the United States District Court for the District of Utah (Central Division) in the lawsuit entitled *United States* v. *Newfield Production Company,* Civil Action No. 2:13–cv–00968–DN. To settle the claims against it under the Safe Drinking Water Act (''SDWA''), Newfield Production Company (''Newfield'') will pay a civil penalty of $600,000, and demonstrate adequate financial assurance through the use of a surety bond through the end of 2013, and thereafter by either the continued use of a surety bond or the use of financial statement with specified restrictions and reporting requirements. In return, the United States will grant Newfield a covenant not to sue or take administrative action pursuant to the SDWA for the civil violations alleged in the Complaint, filed simultaneously with the Consent Decree.

The case was brought under Section 1423 of the SDWA, 42 U.S.C. 300h–2, against Newfield for failure to demonstrate adequate financial responsibility for its Class II oil-related injection wells located in the Monument Butte Well Field, substantially on the Uintah & Ouray Indian Reservation in the State of Utah. Newfield failed to meet all of the five financial ratio tests required for the use of financial statement for fiscal years 2009 and 2010. This was a violation of Section 1423 of the SDWA, 42 U.S.C. 300h–2; the requirements of the Underground Injection Control (''UIC'') program found at 40 CFR 144.52(a)(7); and Section F of Newfield's UIC permits. Newfield obtained alternate financial assurance on September 27, 2010, through a Surety Bond with a Standby Trust Agreement, which remains in place at this time.

The publication of this notice opens a period for public comment on the Consent Decree. Comments should be addressed to the Assistant Attorney General, Environment and Natural Resources Division, and should refer to *United States* v. *Newfield Production Company,* D.J. Ref. No. 90–5–1–1–10453. All comments must be submitted no later than thirty (30) days after the publication date of this notice. Comments may be submitted either by email or by mail:

To submit comments:	*Send them to:*
By e-mail	*pubcommentees.enrd@usdoj.gov.*
By mail	Assistant Attorney General, U.S. DOJ—ENRD, P.O. Box 7611, Washington, DC 20044–7611.

During the public comment period, the Consent Decree may be examined and downloaded at this Justice Department Web site: *http://www.usdoj.gov/enrd/Consent_Decrees.html.* We will provide a paper copy of the Consent Decree upon written request and payment of reproduction costs. Please mail your request and payment to: Consent Decree Library, U.S. DOJ—ENRD, P.O. Box 7611, Washington, DC 20044–7611.

Please enclose a check or money order for $6.50 (25 cents per page reproduction cost) payable to the United States Treasury.

Robert Brook,

Assistant Section Chief, Environmental Enforcement Section, Environment and Natural Resources Division.

[FR Doc. 2013–25868 Filed 10–30–13; 8:45 am]

BILLING CODE 4410–15–P

DEPARTMENT OF LABOR

Office of the Secretary

Agency Information Collection Activities; Submission for OMB Review; Comment Request; Requirements for the Occupational Safety and Health Administration Training Institute Education Centers Program and Occupational Safety and Health Administration Outreach Training Program

ACTION: Notice.

SUMMARY: On October 31, 2013, the Department of Labor (DOL) will submit the Occupational Safety and Health Administration (OSHA) sponsored information collection request (ICR) revision titled, ''Requirements for the Occupational Safety and Health Administration Training Institute Education Centers Program and Occupational Safety and Health Administration Outreach Training Program,'' to the Office of Management and Budget (OMB) for review and approval for use in accordance with the Paperwork Reduction Act (PRA) of 1995 (44 U.S.C. 3501 et seq.).

DATES: Submit comments on or before November 30, 2013.

ADDRESSES: A copy of this ICR with applicable supporting documentation; including a description of the likely respondents, proposed frequency of response, and estimated total burden may be obtained free of charge from the RegInfo.gov Web site at *http://www.reginfo.gov/public/do/PRAViewICR?ref_nbr=201310-1218-001* (this link will only become active on November 1, 2013) or by contacting Michel Smyth by telephone at 202–693–4129 (this is not a toll-free number) or sending an email to *DOL_PRA_PUBLIC@dol.gov.*

Submit comments about this request to the Office of Information and Regulatory Affairs, Attn: OMB Desk Officer for DOL–OSHA, Office of Management and Budget, Room 10235, 725 17th Street NW., Washington, DC 20503, Fax: 202–395–6881 (this is not a toll-free number), email: *OIRA_submission@omb.eop.gov.* Commenters are encouraged, but not required, to send a courtesy copy of any comments to the U.S. Department of Labor-OASAM, Office of the Chief Information Officer, Attn: Information Management Program, Room N1301, 200 Constitution Avenue NW., Washington, DC 20210, email: *DOL_PRA_PUBLIC@dol.gov.*

FOR FURTHER INFORMATION CONTACT: Michel Smyth by telephone at 202–693–4129 (this is not a toll-free number) or by email at *DOL_PRA_PUBLIC@dol.gov.*

Authority: 44 U.S.C. 3507(a)(1)(D).

SUPPLEMENTARY INFORMATION: Consistent with Occupational Safety and Health Act (OSH Act) section 21 authority, the OSHA created two educational programs—the OSHA Training Institute (OTI) Education Centers Program and the OSHA Outreach Training Program. To be a participant in the OTI Education Centers Program or the Outreach Training Program, an individual/organization must provide the OSHA with certain information. The requested information is necessary to evaluate the applicant organization and to implement, oversee, and monitor the OTI Education Centers and Outreach Training Programs, courses, and trainers. The information collection requirements include the following: Application to become an OSHA Training Institute Education Center (OTI Education Center); OTI Education Centers Monthly Summary Report for the OTI Education Centers and the Outreach Training Program Monthly Summary Report; Statement of Compliance with Outreach Training Program Requirements; Outreach Training Program Report Forms (includes Construction, General Industry, Maritime, and Disaster Site);

Online Outreach Training Program Report; Active Trainer List; OSHA Training Institute Student Survey (OSHA Form 49 11–05 Edition) (OMB 1225–0059); Attendance Documentation for OTI Education Centers; Outreach Online Training Certification Statement; Instructor and Staff Resumes (this includes anyone who may be assigned to conduct OSHA classes, contractor, subcontractor, employee, adjunct professor, etc.; and Course Material, upon Request by the OSHA from OTI Education Centers. The ICR has been classified as a revision, because the OSHA seeks to add two forms recording (1) outreach trainer audits and (2) activities outside of an OSHA region where the education center is located.

These information collections are subject to the PRA. A Federal agency generally cannot conduct or sponsor a collection of information, and the public is generally not required to respond to an information collection, unless it is approved by the OMB under the PRA and displays a currently valid OMB Control Number. In addition, notwithstanding any other provisions of law, no person shall generally be subject to penalty for failing to comply with a collection of information that does not display a valid Control Number. *See* 5 CFR 1320.5(a) and 1320.6. The DOL obtains OMB approval for this information collection under Control Number 1218–0262.

OMB authorization for an ICR cannot be for more than three (3) years without renewal, and the current approval for this collection is scheduled to expire on October 31, 2013; however, it should be noted that existing information collection requirements submitted to the OMB receive a month-to-month extension while they undergo review. New requirements would only take effect upon OMB approval. For additional substantive information about this ICR, see the related notice published in the **Federal Register** on August 5, 2013 (78 FR 47419).

Interested parties are encouraged to send comments to the OMB, Office of Information and Regulatory Affairs at the address shown in the **ADDRESSES** section by November 30, 2013. In order to help ensure appropriate consideration, comments should mention OMB Control Number 1218–0262. The OMB is particularly interested in comments that:

- Evaluate whether the proposed collection of information is necessary for the proper performance of the functions of the agency, including whether the information will have practical utility;
- Evaluate the accuracy of the agency's estimate of the burden of the proposed collection of information, including the validity of the methodology and assumptions used;
- Enhance the quality, utility, and clarity of the information to be collected; and
- Minimize the burden of the collection of information on those who are to respond, including through the use of appropriate automated, electronic, mechanical, or other technological collection techniques or other forms of information technology, e.g., permitting electronic submission of responses.

Agency: DOL–OSHA.

Title of Collection: Requirements for the Occupational Safety and Health Administration Training Institute Education Centers Program and Occupational Safety and Health Administration Outreach Training Program.

OMB Control Number: 1218–0262.

Affected Public: Federal Government; State, Local, and Tribal Governments; and Private Sector—business or other for profit and not for profit institutions.

Total Estimated Number of Respondents: 13,027.

Total Estimated Number of Responses: 47,177.

Total Estimated Annual Burden Hours: 11,754.

Total Estimated Annual Other Costs Burden: $0.

Dated: October 28, 2013.

Michel Smyth,

Departmental Clearance Officer.

[FR Doc. 2013–25920 Filed 10–30–13; 8:45 am]

BILLING CODE 4510–26–P

DEPARTMENT OF LABOR

Office of the Secretary

Agency Information Collection Activities; Submission for OMB Review; Comment Request; Eligibility Data Form: Uniformed Services Employment and Reemployment Rights Act and Veterans' Preference

ACTION: Notice.

SUMMARY: On October 31, 2013, the Department of Labor (DOL) will submit the Veterans' Employment and Training Service (VETS) sponsored information collection request (ICR) revision titled, ''Eligibility Data Form: Uniformed Services Employment and Reemployment Rights Act and Veterans' Preference,'' to the Office of Management and Budget (OMB) for review and approval for use in accordance with the Paperwork Reduction Act (PRA) of 1995 (44 U.S.C. 3501 et seq.).

DATES: Submit comments on or before November 30, 2013.

ADDRESSES: A copy of this ICR with applicable supporting documentation; including a description of the likely respondents, proposed frequency of response, and estimated total burden may be obtained free of charge from the RegInfo.gov Web site at *http://www.reginfo.gov/public/do/PRAViewICR?ref_nbr=201305-1293-001* (this link will only become active on November 1, 2013) or by contacting Michel Smyth by telephone at 202–693–4129 (this is not a toll-free number) or sending an email to *DOL_PRA_PUBLIC@dol.gov.*

Submit comments about this request to the Office of Information and Regulatory Affairs, Attn: OMB Desk Officer for DOL–VETS, Office of Management and Budget, Room 10235, 725 17th Street NW., Washington, DC 20503, Fax: 202–395–6881 (this is not a toll-free number), email: *OIRA_submission@omb.eop.gov.* Commenters are encouraged, but not required, to send a courtesy copy of any comments to the U.S. Department of Labor—OASAM, Office of the Chief Information Officer, Attn: Information Management Program, Room N1301, 200 Constitution Avenue NW., Washington, DC 20210, email: *DOL_PRA_PUBLIC@dol.gov.*

FOR FURTHER INFORMATION CONTACT: Contact Michel Smyth by telephone at 202–693–4129 (this is not a toll-free number) or by email at *DOL_PRA_PUBLIC@dol.gov.*

Authority: 44 U.S.C. 3507(a)(1)(D).

SUPPLEMENTARY INFORMATION: Complainants submit Form VETS/USERRA/VP–1010 to the VETS in order to allege violations of either the Uniformed Services Employment and Reemployment Rights Act or laws and regulations related to veterans' preference in Federal employment. This ICR has been classified as a revision, because the VETS has proposed minor changes to this form intended to ensure continuity between the paper VETS 1010 form and the electronic version of the form.

This information collection is subject to the PRA. A Federal agency generally cannot conduct or sponsor a collection of information, and the public is generally not required to respond to an information collection, unless it is approved by the OMB under the PRA and displays a currently valid OMB Control Number. In addition, notwithstanding any other provisions of

law, no person shall generally be subject to penalty for failing to comply with a collection of information that does not display a valid Control Number. *See* 5 CFR 1320.5(a) and 1320.6. The DOL obtains OMB approval for this information collection under Control Number 1293–0002. The current approval is scheduled to expire on October 31, 2013; however, it should be noted that existing information collection requirements submitted to the OMB receive a month-to-month extension while they undergo review. New requirements would only take effect upon OMB approval. For additional substantive information about this ICR, see the related notice published in the **Federal Register** on August 14, 2013 (78 FR 49549).

Interested parties are encouraged to send comments to the OMB, Office of Information and Regulatory Affairs at the address shown in the **ADDRESSES** section by November 30, 2013. In order to help ensure appropriate consideration, comments should mention OMB Control Number 1293–0002. The OMB is particularly interested in comments that:

- Evaluate whether the proposed collection of information is necessary for the proper performance of the functions of the agency, including whether the information will have practical utility;
- Evaluate the accuracy of the agency's estimate of the burden of the proposed collection of information, including the validity of the methodology and assumptions used;
- Enhance the quality, utility, and clarity of the information to be collected; and
- Minimize the burden of the collection of information on those who are to respond, including through the use of appropriate automated, electronic, mechanical, or other technological collection techniques or other forms of information technology, e.g., permitting electronic submission of responses.

Agency: DOL–VETS.

Title of Collection: Eligibility Data Form: Uniformed Services Employment and Reemployment Rights Act and Veterans' Preference.

OMB Control Number: 1293–0002.

Affected Public: Individuals or households.

Total Estimated Number of Respondents: 2,250.

Total Estimated Number of Responses: 2,250.

Total Estimated Annual Burden Hours: 1,125.

Total Estimated Annual Other Costs Burden: $0.

Dated: October 25, 2013.

Michel Smyth,

Departmental Clearance Officer.

[FR Doc. 2013–25800 Filed 10–30–13; 8:45 am]

BILLING CODE 4510–79–P

NATIONAL FOUNDATION ON THE ARTS AND THE HUMANITIES

Meeting of National Council on the Humanities

AGENCY: National Endowment for the Humanities.

ACTION: Notice of meeting.

SUMMARY: Pursuant to section 10(a)(2) of the Federal Advisory Committee Act (5 U.S.C. App.), notice is hereby given that the National Council on the Humanities will meet for the following purposes: To advise the Acting Chairman of the National Endowment for the Humanities (NEH) with respect to policies, programs and procedures for carrying out her functions; to review applications for financial assistance under the National Foundation on the Arts and Humanities Act of 1965 (20 U.S.C. 951–960, as amended) and make recommendations thereon to the Acting Chairman; and to consider gifts offered to NEH and make recommendations thereon to the Acting Chairman.

DATES: The meeting will be held on Thursday and Friday, November 14–15, 2013, each day from 9:00 a.m. until adjourned.

ADDRESSES: The meeting will be held at the Old Post Office Building, 1100 Pennsylvania Ave. NW., Washington, DC 20506. See **SUPPLEMENTARY INFORMATION** section for room numbers.

FOR FURTHER INFORMATION CONTACT: Lisette Voyatzis, Committee Management Officer, 1100 Pennsylvania Ave. NW., Room 529, Washington, DC 20506, or call (202) 606–8322. Hearing-impaired individuals are advised that information on this matter may be obtained by contacting the National Endowment for the Humanities' TDD terminal at (202) 606–8282. Please provide advance notice of any special needs or accommodations, including for a sign language interpreter.

SUPPLEMENTARY INFORMATION: The Committee meetings of the National Council for the Humanities will be held on November 14, 2013, as follows: The policy discussion session (open to the public) will convene at 9:00 a.m. and last until approximately 10:30 a.m., followed by the discussion of specific grant applications and programs before the Council (closed to the public) from 10:30 a.m. until adjourned.

Challenge Grants: Room 726A.
Digital Humanities: Room 402.
Education Programs: Room M–07.
Federal/State Partnership: Room 507.
Preservation and Access: Room 415.
Public Programs: Room 421.
Research Programs: Room 315.

The Plenary Session of the National Council for the Humanities will convene on November 15, 2013 at 9:00 a.m. in Room M–09. The agenda for the morning session (open to the public) will be as follows:

A. Minutes of the Previous Meeting
B. Reports
1. Introductory Remarks
2. NEH Film Presentation
3. Staff Report
4. Congressional Report
5. Budget Report
6. Reports on Policy and General Matters
a. Challenge Grants
b. Digital Humanities
c. Education Programs
d. Federal/State Partnership
e. Preservation and Access
f. Public Programs
g. Research Programs

The remainder of the Plenary Session will be for consideration of specific applications and therefore will be closed to the public.

As identified above, portions of the meeting of the National Council on the Humanities will be closed to the public pursuant to sections 552b(c)(4), 552b(c)(6) and 552b(c)(9)(b) of Title 5 U.S.C., as amended. The closed sessions will include review of personal and/or proprietary financial and commercial information given in confidence to the agency by grant applicants, and discussion of certain information, the premature disclosure of which could significantly frustrate implementation of proposed agency action. I have made this determination pursuant to the authority granted me by the Chairman's Delegation of Authority to Close Advisory Committee Meetings dated July 19, 1993.

Dated: October 25, 2013.

Lisette Voyatzis,

Committee Management Officer.

[FR Doc. 2013–25927 Filed 10–30–13; 8:45 am]

BILLING CODE 7536–01–P

NATIONAL SCIENCE FOUNDATION

Notice of Intent To Seek Approval To Establish an Information Collection

AGENCY: National Science Foundation.

ACTION: Notice and Request for Comments.

SUMMARY: The National Science Foundation (NSF) is announcing plans to request clearance of this collection. In accordance with the requirement of Section 3506(c)(2)(A) of the Paperwork Reduction Act of 1995 (Pub. L. 104–13), we are providing opportunity for public comment on this action. After obtaining and considering public comment, NSF will prepare the submission requesting that OMB approve clearance of this collection for no longer than three years.

DATES: Written comments on this notice must be received by December 30, 2013 to be assured of consideration. Comments received after that date will be considered to the extent practicable.

FOR ADDITIONAL INFORMATION OR COMMENTS: Contact Suzanne H. Plimpton, Reports Clearance Officer, National Science Foundation, 4201 Wilson Boulevard, Suite 295, Arlington, Virginia 22230; telephone (703) 292–7556; or send email to *splimpto@nsf.gov*. Individuals who use a telecommunications device for the deaf (TDD) may call the Federal Information Relay Service (FIRS) at 1–800–877–8339 between 8 a.m. and 8 p.m., Eastern time, Monday through Friday. You also may obtain a copy of the data collection instrument and instructions from Ms. Plimpton.

SUPPLEMENTARY INFORMATION:

Title of Collection: Awardee Reporting Requirements for the Experimental Program to Stimulate Competitive Research (EPSCoR) Research Infrastructure Improvement Track-1 (RII Track-1) Program.

OMB Number: 3145–NEW.

Expiration Date of Approval: Not applicable.

Type of Request: Intent to seek approval to establish an information collection.

Abstract:

Proposed Project:

The Experimental Program to Stimulate Competitive Research (EPSCoR) Research Infrastructure Improvement Track-1 (RII Track-1) Program advances science and engineering capabilities in EPSCoR jurisdictions for discovery, innovation and overall knowledge-based prosperity. EPSCoR RII Track-1 projects build human, cyber, and physical infrastructure in EPSCoR jurisdictions, stimulating sustainable improvements in their Research & Development (R&D) capacity and competitiveness.

EPSCoR RII Track-1 projects are founded on key research themes that empower knowledge generation, dissemination and application. They are generally inter- (or multi-)disciplinary and involve effective jurisdictional and regional collaborations among academic, government and private sector stakeholders that advance scientific research, promote innovation and provide multiple societal benefits; and they broaden participation in science and engineering by engaging multiple institutions and organizations at all levels of research and education, and people within and among (EPSCoR jurisdictions.

EPSCoR RII Track-1 projects are required to submit annual reports on progress and plans, which are used as a basis for performance review and determining the level of continued funding. To support this review and the management of an EPSCoR RII Track-1 project, project teams are required to develop a set of performance indicators for building sustainable infrastructure and capacity in terms of a strategic plan for the project; measure performance and revise strategies as appropriate; report on the progress relative to the project's goals and milestones; and describe changes in strategies, if any, for submission annually to NSF. These indicators are both quantitative and descriptive and may include, for example, the characteristics of project personnel and students; aggregate demographics of participants; sources of financial support and in-kind support; expenditures by operational component; characteristics of industrial and/or other sector participation; research activities; workforce development activities; external engagement activities; patents and patent licenses; publications; degrees granted to students involved in project activities; and descriptions of significant advances and other outcomes of the EPSCoR RII Track-1 project's efforts. Part of this reporting takes the form of several spreadsheets to capture specific information to demonstrate progress towards achieving the goals of the program. Such reporting requirements are included in the cooperative agreement which is binding between the awardee institution and NSF.

Each project's annual report addresses the following categories of activities: (1) Research, (2) education, (3) workforce development, (4) partnerships and collaborations, (5) communication and dissemination, (6) sustainability, (7) diversity, (8) management, and (9) evaluation and assessment.

For each of the categories the report is required to describe overall objectives for the year; specific accomplishments, impacts, outputs and outcomes; problems or challenges the project has encountered in making progress towards goals; and anticipated problems in performance during the following year.

Use of the Information: NSF will use the information to continue funding of the EPSCoR RII Track-1 projects, and to evaluate the progress of the program.

Estimate of Burden: 100 hours per project for twenty-nine projects for a total of 2,900 hours.

Respondents: Non-profit institutions.

Estimated Number of Responses per Report: One

Comments: Comments are invited on (a) Whether the proposed collection of information is necessary for the proper performance of the functions of the Agency, including whether the information shall have practical utility; (b) the accuracy of the Agency's estimate of the burden of the proposed collection of information; (c) ways to enhance the quality, utility, and clarity of the information on respondents, including through the use of automated collection techniques or other forms of information technology; and (d) ways to minimize the burden of the collection of information on those who are to respond, including through the use of appropriate automated, electronic, mechanical, or other technological collection techniques or other forms of information technology.

Dated: October 28, 2013.

Suzanne H. Plimpton,

Reports Clearance Officer, National Science Foundation.

[FR Doc. 2013–25938 Filed 10–30–13; 8:45 am]

BILLING CODE 7555–01–P

NUCLEAR REGULATORY COMMISSION

[Docket No. NRC–2013–0131]

Agency Information Collection Activities: Submission for the Office of Management and Budget (OMB) Review; Comment Request

AGENCY: Nuclear Regulatory Commission.

ACTION: Notice of the OMB review of information collection and solicitation of public comment.

SUMMARY: The U.S. Nuclear Regulatory Commission (NRC) has recently submitted to OMB for review the following proposal for the collection of information under the provisions of the Paperwork Reduction Act of 1995 (44 U.S.C. Chapter 35). The NRC hereby informs potential respondents that an agency may not conduct or sponsor, and that a person is not required to respond to, a collection of information unless it displays a currently valid OMB control number. The NRC published a **Federal Register** notice with a 60-day comment

period on this information collection on July 16, 2013 (78 FR 42555).

1. *Type of submission, new, revision, or extension:* Extension.

2. *The title of the information collection:* 10 CFR Part 52, ''Licenses, Certifications, and Approvals for Nuclear Power Plants.''

3. *Current OMB approval number:* 3150–0151.

4. *The form number if applicable:* N/A.

5. *How often the collection is required:* Whenever applications are made for early site permits (ESPs), standard design certifications (SDCs).

6. *Who will be required or asked to report:* Designers of commercial nuclear power plants (NPPs), electric power companies, and any person eligible under the Atomic Energy Act to apply for ESPs, SDCs, COLs, or MLs.

7. *An estimate of the number of annual responses:* 1,050.

8. *The estimated number of annual respondents:* 20.

9. *An estimate of the total number of hours needed annually to complete the requirement or request:* 199,169 (194,867 reporting, 4,302 recordkeeping).

10. *Abstract:* Part 52 of Title 10 of the Code of Federal Regulations (10 CFR), establishes requirements for the granting of ESPs, certifications of standard NPP designs, and licenses which combine in a single license a construction permit, and an operating license with conditions, OLs, MLs, SDAs, and preapplication reviews of site suitability issues. Part 52 also establishes requirements for renewal of those approvals, permits, certifications, and licenses; amendments to them; exemptions from certifications; and variances from ESPs. The NRC uses the information collected to assess the adequacy and suitability of an applicant's site, plant design, construction, training and experience, plans and procedures for the protection of public health and safety. The NRC review of such information and the findings derived from that information form the basis of NRC decisions and actions concerning the issuance, modification or revocation of site permits, DCs, COLs, and MLs for NPPs.

The public may examine and have copied for a fee publicly available documents, including the final supporting statement, at the NRC's Public Document Room, Room O–1F21, One White Flint North, 11555 Rockville Pike, Rockville, Maryland 20852. The OMB clearance requests are available at the NRC's Web site: *http://www.nrc.gov/public-involve/doc-comment/omb/*. The document will be available on the NRC's home page site for 60 days after the signature date of this notice.

Comments and questions should be directed to the OMB reviewer listed below by December 2, 2013. Comments received after this date will be considered if it is practical to do so, but assurance of consideration cannot be given to comments received after this date.

Chad Whiteman, Desk Officer, Office of Information and Regulatory Affairs (3150–0151), NEOB–10202, Office of Management and Budget, Washington, DC 20503.

Comments can also be emailed to *Chad_S_Whiteman@omb.eop.gov* or submitted by telephone at 202–395–4718.

The NRC Clearance Officer is Tremaine Donnell, telephone: 301–415–6258.

Dated at Rockville, Maryland, this 24th day of October, 2013.

For the Nuclear Regulatory Commission.

Tremaine Donnell,

NRC Clearance Officer, Office of Information Services.

[FR Doc. 2013–25864 Filed 10–30–13; 8:45 am]

BILLING CODE 7590–01–P

NUCLEAR REGULATORY COMMISSION

[Docket No. 70–7001; NRC–2013–0099]

United States Enrichment Corporation, Paducah Gaseous Diffusion Plant

AGENCY: Nuclear Regulatory Commission.

ACTION: Notice of permanent cessation of uranium enrichment activities and suspension of staff review.

SUMMARY: On April 2, 2013, the United States Enrichment Corporation (USEC) filed an application with the U.S. Nuclear Regulatory Commission (NRC) for the renewal of its Certificate of Compliance (CoC) for the Paducah Gaseous Diffusion Plant (PGDP). The current CoC for PGDP is set to expire on December 31, 2013. The NRC staff found USEC's renewal application acceptable for docketing and published a notice in the **Federal Register** acknowledging the receipt of the application and providing an opportunity for public comment. On June 3, 2013, USEC notified the NRC of its decision to permanently cease uranium enrichment activities at the PGDP. USEC stated that in 2014, it will return the PGDP facilities to the U.S. Department of Energy (DOE), and that it would request termination of its CoC in 2014. For these reasons, the NRC staff hereby gives notice that its review of USEC's pending renewal application has been suspended. Because the April 2, 2013, application was filed in the required timeframe, in accordance with the NRC's timely renewal regulations, the existing CoC will remain effective until there is a final NRC determination on the renewal application.

ADDRESSES: Please refer to Docket ID NRC–2013–0099 when contacting the NRC about the availability of information regarding this document. You may access publicly-available information related to this action by the following methods:

- Federal Rulemaking Web site: Go to *http://www.regulations.gov* and search for Docket ID NRC–2013–0099. Address questions about NRC dockets to Carol Gallagher; telephone: 301–287–3422; email: *Carol.Gallagher@nrc.gov*. For technical questions, contact the individual listed in the **FOR FURTHER INFORMATION CONTACT** section of this document.
- NRC's Agencywide Documents Access and Management System (ADAMS): You may access publicly available documents online in the NRC library at *http://www.nrc.gov/reading-rm/adams.html*. To begin the search, select ''*ADAMS Public Documents*'' and then select ''*Begin Web-based ADAMS Search.*'' For problems with ADAMS, please contact the NRC's Public Document Room (PDR) reference staff at 1–800–397–4209, 301–415–4737, or by email to *pdr.resource@nrc.gov*. Copies of USEC's Certificate renewal request (except for classified and proprietary portions which are withheld in accordance with section 2.390 of Title 10 of the *Code of Federal Regulations* (10 CFR), ''Availability of Public Records'') and the June 3, 2013, letter are available in ADAMS under Accession Nos. ML13105A010 and ML13176A151, respectively.
- NRC's PDR: You may examine and purchase copies of public documents at the NRC's PDR, Room O1–F21, One White Flint North, 11555 Rockville Pike, Rockville, Maryland 20852.

FOR FURTHER INFORMATION CONTACT: Osiris Siurano-Perez, Office of Nuclear Material Safety and Safeguards, U.S. Nuclear Regulatory Commission, Washington, DC 20555–0001; telephone: 301–287–9070; email: *Osiris.Siurano-Perez@nrc.gov*.

SUPPLEMENTARY INFORMATION:

I. Background

The NRC issued the initial CoC for PGDP on November 26, 1996, authorizing USEC's operation of a uranium enrichment facility in Paducah, Kentucky, using the gaseous

diffusion process. PGDP was last issued a renewed CoC on December 31, 2008, with an expiration date of December 31, 2013.

By letter dated April 2, 2013 (GDP 13–0010, ADAMS Accession No. ML13105A010), USEC submitted its renewal application in accordance with 10 CFR part 76. In its application, USEC requested that the NRC renew the CoC for a 5-year period with an expiration date of December 31, 2018.

On May 22, 2013 (78 FR 30342), the NRC published in the **Federal Register** a notice of the Certificate renewal request and opportunity to comment. The notice stated that a public meeting would be conducted in the vicinity of the PGDP in July of 2013, in accordance with 10 CFR 76.39. An NRC administrative review, documented in an electronic communication to USEC dated May 31, 2013 (ADAMS Accession No. ML13151A356), found the application sufficient to begin a technical review, in accordance with 10 CFR 76.36.

II. Discussion

In a letter dated June 3, 2013, in accordance with 10 CFR 76.66(b), USEC notified the NRC of its decision to terminate its uranium enrichment operations at the PGDP. USEC stated that it plans to continue managing its inventory of NRC-regulated material, and conduct clean-up related activities under its existing CoC, before returning the PGDP facilities to DOE in 2014. Once USEC has completed these activities, it will request termination of the CoC.

In accordance with 10 CFR 76.55, if a sufficient application for a CoC is timely filed, the existing CoC does not expire until a final determination on the application is made by the NRC. As stated above, USEC's renewal application was found to be sufficient to begin a technical review, and it was timely because it was filed prior to April 15, 2013, as required by 10 CFR 76.31. Therefore, the existing CoC may remain in force after its December 31, 2013, expiration date, until the NRC makes a final determination on the renewal application. Based on USEC's decision to terminate its uranium enrichment operations at PGDP, the NRC's Office of Nuclear Materials Safety and Safeguards has suspended its review of USEC's April 2, 2013, renewal application. As a result, the NRC will not meet the 10 CFR 76.43 requirement that final NRC decisions on renewal applications be made within 6 months of receipt, and is therefore publishing this notice in accordance with 10 CFR 76.43. The NRC will establish a date for making its renewal decision if USEC changes the termination plans described in its June 3, 2013, letter.

USEC's activities at the PGDP will continue to be governed by the existing CoC until its termination, and the NRC will continue monitoring USEC's security and control of nuclear material, decontamination, decommissioning, and waste disposal.

Once the NRC receives USEC's request for CoC termination, the NRC will start the decertification process and coordinate with USEC and DOE to ensure that an appropriate transition of regulatory authority from the NRC to the DOE occurs. Upon the CoC's termination, DOE will assume responsibility and regulatory authority of the PGDP facility.

The NRC intends to conduct a public meeting as part of the PGDP decertification process to allow USEC, DOE, relevant stakeholders, and members of the public to ask questions about the NRC process for terminating the CoC at the PGDP. A notice of this meeting will be posted on the NRC's Web site, *http://www.nrc.gov/public-involve/public-meetings/index.cfm.*

Dated at Rockville, Maryland, this 22 day of October, 2013.

For the U.S. Nuclear Regulatory Commission.

Catherine Haney,

Director, Office of Nuclear Material Safety and Safeguards.

[FR Doc. 2013–25966 Filed 10–30–13; 8:45 am]

BILLING CODE 7590–01–P

NUCLEAR REGULATORY COMMISSION

[Docket No. 040–38368; NRC–2013–0241]

Exemption From Licensing for Disposal of Low-Activity Radioactive Waste at the US Ecology Idaho Resource Conservation and Recovery Act Disposal Facility

AGENCY: Nuclear Regulatory Commission.

ACTION: Environmental assessment and finding of no significant impact; issuance.

SUMMARY: The U.S. Nuclear Regulatory Commission (NRC) is issuing an environmental assessment (EA) and finding of no significant impact for the exemption from licensing for disposal of low-activity radioactive waste from the Safety Light Corporation (SLC) site in Bloomsburg, Pennsylvania, at the US Ecology Idaho (USEI) Resource Conservation and Recovery Act (RCRA) Subtitle C disposal facility near Grand View, Idaho.

ADDRESSES: Please refer to Docket ID NRC–2013–0241 when contacting the NRC about the availability of information regarding this document. You may access publicly-available information related to this action by the following methods:

- *Federal Rulemaking Web site:* Go to *http://www.regulations.gov* and search for Docket ID NRC–2013–0241. Address questions about NRC dockets to Carol Gallagher; telephone: 301–287–3422; email: *Carol.Gallagher@nrc.gov.* For technical questions, contact the individual(s) listed in the **FOR FURTHER INFORMATION CONTACT** section of this document.
- *NRC's Agencywide Documents Access and Management System (ADAMS):* You may access publicly available documents online in the NRC Library at *http://www.nrc.gov/reading-rm/adams.html.* To begin the search, select ''*ADAMS Public Documents*'' and then select ''*Begin Web-based ADAMS Search.*'' For problems with ADAMS, please contact the NRC's Public Document Room (PDR) reference staff at 1–800–397–4209, 301–415–4737, or by email to *pdr.resource@nrc.gov.*
- *NRC's PDR:* You may examine and purchase copies of public documents at the NRC's PDR, Room O1–F21, One White Flint North, 11555 Rockville Pike, Rockville, Maryland 20852.

FOR FURTHER INFORMATION CONTACT: Mr. Stephen Lemont, Office of Federal and State Materials and Environmental Management Programs, U.S. Nuclear Regulatory Commission, Washington, DC 20555–0001, telephone: 301–415–5163, email: *Stephen.Lemont@nrc.gov.*

SUPPLEMENTARY INFORMATION:

I. Introduction

The NRC staff is considering a request from the US Ecology, Inc. (US Ecology), dated July 7, 2013 (ADAMS Accession No. ML13198A017), for exemption from licensing to receive and dispose of approximately 7,640 cubic meters (270,000 cubic feet) of low-activity radioactive wastes at the USEI RCRA Subtitle C hazardous and low-activity radioactive waste facility located near Grand View, Idaho. The wastes would consist of bulk debris and materials from the demolition of structures on the SLC site in Bloomsburg, Pennsylvania. This proposed NRC action would exempt the USEI site from Atomic Energy Act and NRC licensing requirements.

The term ''low-activity waste'' does not have a statutory or regulatory definition, but generally means wastes that contain some residual radioactivity, including naturally occurring

radionuclides, which can be safely and economically disposed of in hazardous or municipal solid waste landfills rather than in low-level radioactive waste (LLRW) disposal facilities. Such waste is invariably a fraction of the limits for Class A LLRW contained in part 61 of Title 10 of the *Code of Federal Regulations* (10 CFR), and is often below concentrations that are considered safe for unrestricted release under international standards.

The SLC site (also known as the SLC Superfund Site) was listed on the U.S. Environmental Protection Agency's (USEPA's) National Priorities List on April 27, 2005, and is presently the subject of a remedial action under the Comprehensive Environmental Response, Compensation, and Liability Act (CERCLA). The USEPA is the lead agency for the remedial action. Section 121(d)(3) of CERCLA applies in any CERCLA response action involving off-site transfer of any hazardous substance, or pollutant or contaminant (CERCLA wastes). This section of the statute is interpreted in the USEPA's Offsite Rule (OSR) (40 CFR 300.440), which requires that CERCLA wastes may only be placed in a facility operating in compliance with RCRA or other applicable Federal or State requirements. Therefore, the subject waste from the SLC site must be disposed at an appropriate offsite disposal facility pursuant to the OSR.

The request to the NRC by US Ecology was made under the alternate disposal provision contained in 10 CFR 20.2002 and the exemption provision in 10 CFR 30.11. The Regulations in 10 CFR 20.2001 identify the mechanisms by which a licensee may lawfully dispose of its licensed radioactive waste. It contains seven different disposal paths, including 10 CFR 20.2002, a provision for ''alternative disposal'' authorizations. Section 20.2002 is a general provision that allows for other disposal methods, different from those already defined in the NRC's regulations, provided that radiation doses are maintained as low as is reasonably achievable (ALARA) and within the dose limits in 10 CFR part 20. In practice, § 20.2002 is most often used for disposal of low-activity waste in hazardous or solid waste landfills that are permitted under RCRA.

In Pennsylvania, where the SLC site is located, is an NRC Agreement State, while Idaho, where the USEI RCRA disposal facility is located, is not an Agreement State. As a RCRA facility, USEI is permitted and regulated by the Idaho Department of Environmental Quality (IDEQ), not the NRC. Idaho regulations and USEI's RCRA permit provide for the acceptance and disposal of the low-activity waste material with appropriate NRC exemptions and approval. According to the NRC's March 13, 2012, letter to all Agreement States (ADAMS Accession No. ML12065A038), ''Clarification of the Authorization for Alternate Disposal of Material Issued under 10 CFR 20.2002 and Exemption Provisions in 10 CFR (FSME–12–025),'' there are various approaches that should be taken when both Agreement States and non-Agreement States are involved in the § 20.2002 exemption process. The present action falls under Situation #3 in that letter, which addresses the course of action when an Agreement State licensee requests authorization under the State's § 20.2002-equivalent regulation to dispose of material at an unlicensed facility in a non-Agreement State. According to Situation #3,

> . . . both the Agreement State and the NRC would need to become involved. The Agreement State that regulates the license seeking to dispose of the material at an unlicensed facility in another state would need to approve disposal under the Agreement State's 20.2002-equivalent regulation. The unlicensed facility would then need to obtain a license or an exemption from the NRC prior to accepting the material for disposal.

Accordingly, in a letter dated June 11, 2013 (ADAMS Accession No. ML13296A534), the Pennsylvania Department of Environmental Protection informed the USEPA that it had authorized offsite disposal of the subject material from the SLC site in a controlled environment, such as that provided by a RCRA Subtitle C hazardous waste disposal facility. Approval of the US Ecology request to the NRC would satisfy the requirements of FSME–12–025 Situation #3, the State of Idaho and USEI's RCRA permit, and allow the material to be transported to USEI for disposal.

II. Environmental Assessment Summary

Under the requirements of 10 CFR 51.21 and 51.30(a), the NRC staff developed an EA (ADAMS Accession No. ML13296A807) in support of the proposed federal action, which is for the NRC to grant an exemption from licensing to US Ecology for the USEI RCRA Subtitle C hazardous and low-activity radioactive waste facility, located near Grand View, Idaho, to receive and dispose of approximately 7,640 cubic meters (270,000 cubic feet) of low-activity radioactive wastes, consisting of bulk debris and materials from the demolition of buildings on the SLC site in Bloomsburg, Pennsylvania. If the NRC exemption is granted, the waste could be transported from the SLC site for disposal at the USEI facility.

Radionuclides present in the waste materials originated from the production of luminous materials and other commercial products and are expected to be primarily surface and volumetric contaminants on walls, ceilings, floors, and other equipment. The waste will also include debris and materials associated with or contained within the buildings, such as furniture, ductwork, lighting, wiring, process equipment, metal sheet, and some asbestos-containing material in the form of roofing, floor tile and siding. Specific radionuclides expected in the waste include Actinium-227, Americium-241, Cesium-137, Cobalt-60, Lead-210, Neptunium-237, Nickel-63, Radium-226, Strontium-90, and Tritium. Radionuclide concentrations are not expected to exceed any USEI waste acceptance criteria (WAC), and any material identified that could cause a shipment to exceed the USEI WAC will be segregated and disposed at an appropriately licensed LLRW disposal facility. The remedial action is not expected to generate RCRA hazardous wastes. However, if small quantities of hazardous wastes are generated, they will be segregated and initially separated from the main building debris for classification and radiological assessment. Hazardous waste materials found to contain radiological contaminants will be treated (by micro- and/or macro-encapsulation) and disposed at USEI under the RCRA permit and WAC. If organic compounds that require treatment are present, appropriate methods will be used to treat the organics prior to any stabilization for disposal.

The USEI site comprises an approximately 65-hectare (160-acre) hazardous waste treatment, storage and disposal facility. The facility is permitted under Subtitle C of RCRA and under the Toxic Substances Control Act (TSCA) to treat and dispose of RCRA and TSCA wastes, as well as a wide range of low-activity radioactive wastes and other wastes. The operating disposal area includes two active landfill disposal cells and four surface impoundment disposal units. The site is located in the semi-arid Owyhee Desert where there is limited precipitation. The site's arid climate, deep groundwater, and favorable soil and geologic conditions serve to promote waste isolation.

The information on environmental impacts presented in the EA is focused on those environmental resource areas for which the NRC staff understands that potential impacts of the proposed

action could occur. Both potential radiological and non-radiological impacts were considered. If the NRC grants the exemption, the low-activity SLC waste would be disposed of at the USEI site. The USEI site includes an operating disposal facility, and disposition of the low-activity SLC waste would occur in an existing waste disposal cell at the site. The NRC staff concludes that USEI facility's RCRA permit requirements, site and facility design features, and engineering and administrative controls ensure the protection of workers, members of the public, and the environment. Also, prior major earth disturbances to create the waste disposal cell and other site facilities, and ongoing site operations associated with waste handling and disposal would preclude the existence of listed threatened or endangered species or critical habitat and of historic properties.

The US Ecology request (ADAMS Accession No. ML13198A017) includes a radiological dose assessment for the transport and disposal of the SLC waste material. According to 10 CFR 20.2002, the analysis must show that the radiological doses arising from the proposed action will be ALARA and within the 10 CFR part 20 dose limits. The dose assessment evaluates worker doses for transporting the material to USEI, doses for the onsite workers at the USEI facility, and landfill post closure doses for members of the general public. The analysis used Microshield and RESRAD Version 6.5, as appropriate, to calculate the doses. The NRC staff reviewed and evaluated this dose assessment and performed independent dose calculations, and found the dose assessment to be acceptable under 10 CFR part 20.

The dose assessment uses a conservative source term and site-specific parameter values, and assessed a range of possible exposure scenarios. Estimated doses to workers associated with both the transport and disposal processes were all below 0.01 millisievert/year (mSv/yr) (1 millirem/year (mrem/yr)). Regardless of the radionuclide concentrations used, the post-closure dose to a member of the public was also below 0.01 mSv/yr (1 mrem/yr). By comparison, the 10 CFR part 20 dose limits, as total effective dose equivalents, are 50 mSv/yr (5000 mrem/yr) to workers (10 CFR 20.1201(a)(1)(i)) and 1 mSv/yr (100 mrem/yr) to individual members of the public (10 CFR 20.1301(a)(1)). Also, based on the results of these analyses, the staff concludes that the proposed disposal action will not significantly add to the annual cumulative dose from all exempted and naturally occurring radioactive material received at the USEI disposal facility.

As a result of the dose assessment and other considerations, the staff concludes that the exemption of the USEI site from NRC licensing requirements will not significantly increase the probability or consequences of accidents, no changes are being made in the types of any effluents that may be released off site, and there is no significant increase in occupational or public radiation exposure.

The staff considered the no-action alternative as an alternative to the proposed action. Under the no-action alternative, the NRC would deny the present US Ecology exemption request and the SLC waste could not be received and disposed at the USEI RCRA disposal facility. However, the staff assumes that the subject SLC waste would still be generated under the USEPA's CERCLA response action and, for this response action to be in compliance with the OSR, the SLC waste would still need to be transported to and disposed at another acceptable offsite facility. This facility could be another appropriately permitted disposal site, such as another RCRA hazardous disposal facility, a municipal landfill, or a licensed LLRW disposal site. Under these circumstances, the potential environmental impacts of the proposed action and the no-action alternative at the disposal facilities would be similar, although denial of the US Ecology request by the NRC may result in delayed demolition of the structures at the SLC site or delayed offsite shipment of the demolition wastes, potentially resulting in increased exposure of site workers and members of the public to the low-activity materials. Also, disposal of the material at a LLRW disposal facility would be at higher cost than at a RCRA hazardous waste landfill or municipal landfill permitted to accept low-activity radioactive wastes but with little or no commensurate reduction of risk, and disposal in a RCRA hazardous waste or municipal landfill would conserve LLRW disposal capacity for higher activity wastes.

III. Finding of No Significant Impact

The NRC staff has prepared an EA in support of the proposed action. The staff has concluded that the proposed action, for the NRC to grant an exemption from licensing for the USEI RCRA Subtitle C hazardous and low-activity radioactive waste facility to receive and dispose of specified low-activity radioactive wastes from the SLC Superfund Site, will not significantly impact the quality of the human environment, and that the proposed action is the preferred alternative. The USEI site includes an operating disposal facility where the low-activity SLC waste would be disposed of pursuant to a RCRA permit in an existing waste disposal cell. The protection of workers, members of the public, and the environment are ensured by USEI permit requirements, site and facility design features, and engineering and administrative controls. Further, estimated radiological doses associated with transport and disposal of the waste to workers and members of the public would be below 0.01 mSv/yr (1 mrem/yr), which is orders of magnitude below the 10 CFR part 20 dose limits of 50 mSv/yr (5000 mrem/yr) to workers and 1 mSv/yr (100 mrem/yr) to individual members of the public. Also, the staff concludes that the proposed disposal action will not significantly add to the annual cumulative dose from all exempted and naturally occurring radioactive material received at the USEI disposal facility.

On the basis of the conclusion of the EA, the NRC finds that there are no significant environmental impacts from the proposed action, and that preparation of an environmental impact statement is not warranted. Accordingly, the NRC has determined that a Finding of No Significant Impact is appropriate.

Dated at Rockville, Maryland, this 25th day of October 2013.

For the Nuclear Regulatory Commission.

Kevin Hsueh,

Acting Deputy Director, Environmental Protection and Performance Directorate, Division of Waste Management and Environmental Protection, Office of Federal and State Materials and Environmental Management Programs.

[FR Doc. 2013–25965 Filed 10–30–13; 8:45 am]

BILLING CODE 7590–01–P

POSTAL SERVICE

Product Change—Parcel Return Service Negotiated Service Agreement

AGENCY: Postal Service™.

ACTION: Notice.

SUMMARY: The Postal Service gives notice of filing a request with the Postal Regulatory Commission to add a domestic shipping services contract to the list of Negotiated Service Agreements in the Mail Classification Schedule's Competitive Products List.

DATES: *Effective date:* October 31, 2013.

FOR FURTHER INFORMATION CONTACT: Elizabeth A. Reed, 202–268–3179.

SUPPLEMENTARY INFORMATION: The United States Postal Service® hereby gives notice that, pursuant to 39 U.S.C. 3642 and 3632(b)(3), on October 23, 2013, it filed with the Postal Regulatory Commission a *Request of the United States Postal Service To Add Parcel Return Service Contract 5 to Competitive Product List.* Documents are available at *www.prc.gov,* Docket Nos. MC2014–4, CP2014–4.

Stanley F. Mires,

Attorney, Legal Policy & Legislative Advice.

[FR Doc. 2013–25807 Filed 10–30–13; 8:45 am]

BILLING CODE 7710–12–P

POSTAL SERVICE

Product Change—Priority Mail Express and Priority Mail Negotiated Service Agreement

AGENCY: Postal Service™.

ACTION: Notice.

SUMMARY: The Postal Service gives notice of filing a request with the Postal Regulatory Commission to add a domestic shipping services contract to the list of Negotiated Service Agreements in the Mail Classification Schedule's Competitive Products List.

DATES: *Effective date:* October 31, 2013.

FOR FURTHER INFORMATION CONTACT: Elizabeth A. Reed, 202–268–3179.

SUPPLEMENTARY INFORMATION: The United States Postal Service® hereby gives notice that, pursuant to 39 U.S.C. 3642 and 3632(b)(3), on October 23, 2013, it filed with the Postal Regulatory Commission a *Request of the United States Postal Service To Add Priority Mail Express & Priority Mail Contract 15 to Competitive Product List.* Documents are available at *www.prc.gov,* Docket Nos. MC2014–3, CP2014–3.

Stanley F. Mires,

Attorney, Legal Policy & Legislative Advice.

[FR Doc. 2013–25810 Filed 10–30–13; 8:45 am]

BILLING CODE 7710–12–P

POSTAL SERVICE

Product Change—Priority Mail Negotiated Service Agreement

AGENCY: Postal Service™.

ACTION: Notice.

SUMMARY: The Postal Service gives notice of filing a request with the Postal Regulatory Commission to add a domestic shipping services contract to the list of Negotiated Service Agreements in the Mail Classification Schedule's Competitive Products List.

DATES: *Effective date;* October 31, 2013.

FOR FURTHER INFORMATION CONTACT: Elizabeth A. Reed, 202–268–3179.

SUPPLEMENTARY INFORMATION: The United States Postal Service® hereby gives notice that, pursuant to 39 U.S.C. 3642 and 3632(b)(3), on October 23, 2013, it filed with the Postal Regulatory Commission a *Request of the United States Postal Service To Add Priority Mail Contract 66 to Competitive Product List.* Documents are available at *www.prc.gov,* Docket Nos. MC2014–2, CP2014–2.

Stanley F. Mires,

Attorney, Legal Policy & Legislative Advice.

[FR Doc. 2013–25812 Filed 10–30–13; 8:45 am]

BILLING CODE 7710–12–P

SECURITIES AND EXCHANGE COMMISSION

[Release No. 30764; File No. 812–14189]

Ameritas Life Insurance Corp., et al; Notice of Application

October 25, 2013.

AGENCY: The Securities and Exchange Commission (''Commission'').

ACTION: Notice of application for an order approving the substitution of certain securities pursuant to Section 26(c) of the Investment Company Act of 1940, as amended (the ''1940 Act'').

APPLICANTS: Ameritas Life Insurance Corp., Ameritas Life Insurance Corp. of New York, The Union Central Life Insurance Company (each, a ''Life Insurance Company'' and, collectively, the ''Life Insurance Companies''), and their respective separate accounts: Ameritas Variable Separate Account VA–2, Ameritas Variable Separate Account V, Ameritas Variable Separate Account VA, Ameritas Variable Separate Account VL (the ''Ameritas Life Accounts''); Ameritas Life of NY Separate Account VA, Ameritas Life of NY Separate Account VUL (the ''Ameritas Life of NY Accounts''); and the Carillon Life Account (each an ''Account'' and together with the Life Insurance Companies, the ''Applicants'').

SUMMARY OF APPLICATION: The Applicants seek an order under Section 26(c) of the 1940 Act approving the substitution of shares of the VIP Money Market Portfolio, Initial Class (the ''Replacement Portfolio'') of the Variable Insurance Products Fund V (''VIPFV'') for shares of the Calvert VP Money Market Portfolio (the ''Current Portfolio'') of the Calvert Variable Series, Inc. (''CVSI'') held by the Accounts to support certain variable annuity contracts or variable life insurance contracts (collectively, the ''Contracts'') issued by the Life Insurance Companies (the ''Substitution'').

DATES: *Filing Date:* The application was filed on July 31, 2013, and an amended and restated application was filed on October 25, 2013.

HEARING OR NOTIFICATION OF HEARING: An order granting the application will be issued unless the Commission orders a hearing. Interested persons may request a hearing by writing to the Commission's Secretary and serving Applicants with a copy of the request, personally or by mail. Hearing requests should be received by the Commission by 5:30 p.m. on November 14, 2013, and should be accompanied by proof of service on the Applicants, in the form of an affidavit or, for lawyers, a certificate of service. Hearing requests should state the nature of the requester's interest, the reason for the request, and the issues contested. Persons may request notification of a hearing by writing to the Secretary of the Commission.

ADDRESSES: Secretary, Securities and Exchange Commission, 100 F Street NE., Washington, DC 20549–1090. Applicants: Ameritas Life Insurance Corp., Ameritas Variable Separate Account VA–2, Ameritas Variable Separate Account V, Ameritas Variable Separate Account VA, and Ameritas Variable Separate Account VL, 5900 ''O'' Street, Lincoln, Nebraska 68510; Ameritas Life Insurance Corp. of New York, Ameritas Life of NY Separate Account VA, Ameritas Life of NY Separate Account VUL, 1350 Broadway, Suite 2201, New York, New York 10018; and The Union Central Life Insurance Company and Carillon Life Account, 5900 ''O'' Street, Lincoln, Nebraska 68510.

FOR FURTHER INFORMATION CONTACT: Michelle Roberts, Senior Counsel, or Joyce M. Pickholz, Branch Chief, Insured Investments Office, Division of Investment Management at (202) 551–6795.

SUPPLEMENTARY INFORMATION: The following is a summary of the application. The complete application may be obtained via the Commission's Web site by searching for the file number, or an applicant using the Company name box, at *http://www.sec.gov/search/search.htm* or by calling (202) 551–8090.

Applicants' Representations

1. The Life Insurance Companies, on their own behalf and on behalf of their respective separate accounts, propose to substitute shares of the Replacement Portfolio for shares of the Current Portfolio held by the Accounts to fund the Contracts.

2. Ameritas Life Insurance Corp. is the depositor and sponsor of the Ameritas Life Accounts. Ameritas Life Insurance Corp. of New York is the depositor and sponsor of the Ameritas Life of NY Accounts. The Union Central Life Insurance Company is the depositor and sponsor of the Carillon Life Account.

3. Each Account is a ''separate account'' as defined by Rule 0–1(e) under the 1940 Act, and is registered with the Commission as a unit investment trust. Security interests under the Contracts have been registered under the Securities Act of 1933, as amended (the ''1933 Act''). The application sets forth the registration statement file numbers for the Contracts and the Separate Accounts.

4. Each Account is divided into subaccounts, each of which invests exclusively in shares of a corresponding investment portfolio (a ''Portfolio'') of a series-type management investment company, including CVSI.

5. Pursuant to the Contracts, the Life Insurance Companies reserve the right to substitute shares of one Portfolio for shares of another. The prospectuses for the Contracts also disclose that the Life Insurance Companies reserve this right.

6. CVSI is an open-end management investment company (File No. 811–03591) that currently consists of six investment portfolios, including the Current Portfolio, and issues a separate series of shares in connection with each. CVSI has registered such shares under the 1933 Act (File No. 002–80154).

7. Calvert Investment Management, Inc. (''CIM'') serves as the investment adviser to each CVSI Portfolio. CIM is an indirect wholly-owned subsidiary of AMHC.

8. The VIPFV is an open-end management investment company (File No. 811–05361) that currently consists of 32 investment portfolios, one of which, the Replacement Portfolio, is the subject of the proposed Substitution. VIPFV issues a separate series of shares in connection with each Portfolio and has registered such shares under the 1933 Act (File No. 033–17704).

9. Fidelity Management & Research Company (''FMR'') serves as the manager of each Portfolio of VIPFV. FMR receives an investment management fee from each Portfolio. Fidelity Investments Money Management, Inc. (''FIMM'') and other affiliates of FMR serve as sub-advisers for the Replacement Portfolio. FIMM has the day-to-day responsibility of choosing investments for the Replacement Portfolio. In addition, other affiliates of FMR serve as sub-advisers for the Replacement Portfolio and may provide investment research and advice for the Replacement Portfolio. None of VIPFV, FMR, FIMM, or other affiliates of FMR are affiliated persons (or affiliated persons of affiliated person) of any of the Applicants. Likewise, none of the Applicants are affiliated persons (or affiliated persons of affiliated persons) of VIPFV, FMR, FIMM or other affiliates of FMR.

10. The Applicants state that Replacement Portfolio's and Current Portfolio's respective investment objectives, strategies and risks are substantially the same. A comparison of the investment objectives, strategies and risks of the Replacement Portfolio and the Current Portfolio is included in the application.

11. The following table compares the fees and expenses of the Current Portfolio and the Replacement Portfolio as of the year ended December 31, 2012:

	Current portfolio	Replacement portfolio
	Calvert Variable Series, Inc., Calvert VP Money Market Portfolio	Variable Insurance Products Fund V, VIP Money Market Portfolio, Initial Class
Management Fee	0.25%	0.17%.
Distribution and Service (12b–1) Fee	None	None.
Other Expenses	0.14%	0.09%.
Total Operating Expenses	0.39%	0.26%.
Fee Waivers and Expense Reimbursements	None [1]	None.
Net Operating Expenses	0.39% [2]	0.26%.

[1] The Investment Advisor, CIM, has contractually agreed to limit direct net annual portfolio operating expenses through April 30, 2014 to 0.40%. Under the terms of the contractual expense limitation, operating expenses do not include interest expense, brokerage commissions, taxes and extraordinary expenses. Only the Board of Directors of CVSI may terminate a Portfolio's expense cap before the contractual period expires.

[2] The Advisor further voluntarily reimbursed expenses of $88,900 or 0.11%, for Net Operating Expenses of 0.28% to maintain a positive yield during the year ended December 31, 2012.

12. The Applicants state that the proposed Substitution is in response to a decision by the Board of Directors for CVSI, at a meeting held on June 5, 2013, to approve the dissolution of the Current Portfolio on or about November 15, 2013 (the ''Liquidation Date''). The board's decision to liquidate the Current Portfolio requires the Life Insurance Companies to transfer accumulated Contract value invested in the Current Portfolio to an alternative investment option available under the Contracts on or before the Liquidation Date. Currently, the only money market portfolio investment option offered under the Contracts is the Current Portfolio. Accordingly, the proposed Substitution is necessary in order to provide the Contract owners with continued access to a money market portfolio investment option. Consequently, the Life Insurance Companies have determined to replace the Current Portfolio with the Replacement Portfolio via the Substitution.

13. The Life Insurance Companies submit that the Replacement Portfolio is an appropriate alternative for Contract owners for several reasons. First, its investment objectives, strategies and risks are substantially the same as those of the Current Portfolio. Second, it is substantially larger than the Current Portfolio, has had lower overall expense levels than the Portfolio in recent years, and has had higher yields in recent years than the Current Portfolio. Third, the Contracts and other variable annuity and variable life insurance contracts issued by the Life Insurance Companies currently offer one or more VIPFV portfolios (other than the Replacement Portfolio).

14. The Applicants believe that Contract owners would benefit from the significantly larger size of the Replacement Portfolio and the somewhat higher yields of the Replacement Portfolio, as contrasted

with the size and recent yields of the Current Portfolio. The yield for the Current Portfolio for the seven days ending December 31, 2012 was 0.01%. The net asset value of the Current Portfolio was $85,913,000 as of December 31, 2012. The yield for the Replacement Portfolio Initial Class shares for the seven days ending December 31, 2012 was 0.08%. The net asset value of the Replacement Portfolio supporting Initial Class shares was $889,797,000 as of December 31, 2012.

15. The Applicants believe that Contract owners will benefit from the reduction in overall expenses of the Replacement Portfolio as compared to the Current Portfolio. Specifically, the management fee, other expenses, and total operating expenses are less than those of the Current Portfolio. Both Portfolios have no charge for Rule 12b–1 distribution and services fees. The total annual operating expense of the Replacement Portfolio is less than that of the Current Portfolio. Given this decrease, the Applicants believe that the Substitution would benefit Contract owners by reducing the overall level of Portfolio expenses.

Legal Analysis and Conditions

1. The Applicants request that the Commission issue an order pursuant to Section 26(c) of the 1940 Act approving the proposed Substitution. Section 26(c) of the 1940 Act requires the depositor of a registered unit investment trust holding securities of a single issuer to obtain Commission approval before substituting the securities held by the trust.

2. Applicants submit that the proposed Substitution is not the type of substitution that Section 26(c) was designed to prevent. Section 26(c) was intended to provide for Commission scrutiny of a proposed Substitution which could, in effect, force shareholders dissatisfied with the substitute security to redeem their shares, thereby possibly incurring a loss of the sales load deducted from initial premium, an additional sales load upon reinvestment of the proceeds of redemption, or both, as well as possibly suffering adverse tax consequences upon redemption. Consequently, the section was designed to forestall the ability of a depositor to present holders of interest in a unit investment trust with situations in which a holder's only choice would be to continue an investment in an unsuitable underlying security, or to elect a costly and, in effect, forced redemption.

3. Applicants submit that the proposed substitution will provide Contract owners with substantially the same investment vehicle and would not raise any of the aforementioned concerns that Congress intended to address when the 1940 Act was amended to include Section 26(c).

4. Applicants represent that redemptions and purchases will occur simultaneously so that contract values will remain fully invested at all times. All redemptions of shares of the Current Portfolio and purchases of shares of the Replacement Portfolio will be effected in accordance with Section 22(c) of the Act and Rule 22c–1 thereunder. The Substitution will take place at relative net asset value as of the effective date of the Substitution (''Effective Date'') with no change in the amount of any Contract owner's contract value or death benefit or in the dollar value of his or her investments in the money market subaccount of the applicable Account.

5. Contract values attributable to investments in the Current Portfolio will be transferred to the Replacement Portfolio without charge (including sales charges or surrender charges) and without counting toward the number of transfers that may be permitted without charge. Contract owners will not incur any additional fees or charges as a result of the Substitution, nor will their rights or the Life Insurance Companies' respective obligations under the Contracts be altered in any way and the Substitution will not change Contract owners' insurance benefits under the Contracts. All expenses incurred in connection with the Substitution, including legal, accounting, transactional, and other fees and expenses, including brokerage commissions, will be paid by the Life Insurance Companies. In addition, the Substitution will not impose any tax liability on Contract owners.

6. The Applicants also represent that the Substitution will not cause the Contract fees and charges currently paid by existing Contract owners to be greater after the Substitution than before the Substitution. The Life Insurance Companies will not exercise any right they may have under the Contracts to impose restrictions on transfers under the Contracts for the period beginning on the date of the Pre-Substitution Notice (defined below) through at least thirty (30) days following the Effective Date.

7. Existing Contract owners will be notified of the proposed Substitution by means of a prospectus or prospectus supplement for each of the Contracts (''Pre-Substitution Notice'') at least thirty (30) days before the Effective Date. New purchasers of the Contracts will be provided the Pre-Substitution Notice, the Contract prospectus, and the prospectus for the Replacement Portfolio in accordance with all applicable legal requirements.

8. The Pre-Substitution Notice will: (i) State that the Applicants filed the application seeking approval of the Substitution; (ii) set forth the anticipated Effective Date; (iii) explain that the Contract values attributable to investments in the Current Portfolio would be attributable to the Replacement Portfolio as of the Effective Date; (iv) state that, from the date of the Pre-Substitution Notice until the Effective Date, Contract Owners are permitted to transfer Contract value out of any Current Portfolio sub-account to any other sub-account(s) offered under the Contract without the transfer being treated as a transfer for purposes of transfer limitations and fees that would otherwise be applicable under the terms of the Contract; (v) advise Contract owners that any contract value remaining in the Current Portfolio sub-account on the Effective Date will be transferred to a sub-account investing in the Replacement Portfolio, and that the Substitution will take place at relative net asset value; (vi) inform Contract owners that for at least thirty (30) days following the Effective Date, the applicable Life Insurance Company will permit Contract owners to make transfers of contract value out of the sub-account investing in the Replacement Portfolio to any other available sub-accounts offered under their Contracts without the transfer being counted as a transfer for purposes of transfer limitations and fees, if any, that would otherwise be applicable under the terms of the Contracts; and (vii) inform Contract owners that, except as described in the market timing limitations section of the relevant prospectus, the applicable Life Insurance Company will not exercise any rights reserved by it under the Contracts to impose additional restrictions on transfers out of the sub-account investing in the Replacement Portfolio for at least thirty (30) days after the Effective Date.

9. All Contract owners will have received a copy of the most recent prospectus for the Replacement Portfolio prior to the Substitution. In addition, within five (5) days following the Substitution, Contract owners affected by the Substitution will be notified in writing that the Substitution was carried out. This notice will restate the relevant information set forth in the Pre-Substitution Notice, and will also explain that the contract values attributable to investments in the Current Portfolio were transferred to the Replacement Portfolio without charge

(including sales charges or surrender charges) and without counting toward the number of transfers that may be permitted without charge.

10. The Applicants represent that the Life Insurance Companies will not receive, for three (3) years after the Effective Date, any direct or indirect benefits from the Replacement Portfolio, its advisor or underwriter (or their affiliates), in connection with assets attributable to the Contracts affected by the Substitution, at a higher rate than the Life Insurance Companies had received from the Current Portfolio, its advisor or underwriter (or their affiliates), including without limitation 12b–1 fees, revenue sharing or other arrangements. The Applicants further represent that the Substitution and the selection of the Replacement Portfolio were not motivated by any financial consideration paid or to be paid to a Life Insurance Company or its affiliates by the Replacement Portfolio, its advisor or underwriter, or their affiliates.

11. Applicants submit that the replacement of the Current Portfolio with the Replacement Portfolio is consistent with the protection of Contract owners and the purposes fairly intended by the policy and provisions of the 1940 Act and, thus, meets the standards necessary to support an order pursuant to Section 26(c) of the 1940 Act. In addition, the Applicants submit that the proposed Substitution meets the standards that the Commission and its staff have applied to Substitutions that have been approved in the past.

Conclusion

For the reasons and upon the facts set forth above in the application, the Applicants believe that the requested order meets the standards set forth in Section 26(c) of the 1940 Act and should therefore be granted.

For the Commission, by the Division of Investment Management, pursuant to delegated authority.

Kevin M. O'Neill,

Deputy Secretary.

[FR Doc. 2013–25831 Filed 10–30–13; 8:45 am]

BILLING CODE 8011–01–P

SECURITIES AND EXCHANGE COMMISSION

[Release No. 34–70756; File No. SR–BX–2013–016]

Self-Regulatory Organizations; NASDAQ OMX BX Inc.; Order Disapproving Proposed Rule Change To Adopt a Directed Order Process

October 25, 2013.

I. Introduction

On February 21, 2013, NASDAQ OMX BX Inc. (''Exchange'' or ''BX'') filed with the Securities and Exchange Commission (''Commission''), pursuant to Section 19(b)(1) of the Securities Exchange Act of 1934 (''Act''),[1] and Rule 19b–4 thereunder,[2] a proposed rule change to establish a directed order process for the trading of listed options. The proposed rule change was published for comment in the **Federal Register** on March 11, 2013.[3] The Commission received a comment letter on the proposal,[4] BX's response to the comment letter,[5] and a follow up comment letter from the same commenter.[6] On April 17, 2013, BX filed Amendment No. 1 to the proposed rule change.[7] On April 22, 2013, BX extended to June 6, 2013 the time period within which the Commission must approve the proposed rule change, disapprove the proposed rule change, or institute proceedings to determine whether to disapprove the proposed rule change. On June 3, 2013, the Commission instituted proceedings to determine whether to approve or disapprove the proposed rule change.[8] The Commission received a letter from BX responding to the Order Instituting Proceedings,[9] another comment letter from the same commenter—NYSE Euronext—who had commented previously on the proposed rule change,[10] and a follow up letter from BX in response to NYSE Euronext's comment letter.[11] This order disapproves the proposed rule change.

II. Description of the Proposal

BX proposes to establish a directed order process that would permit members of BX (''BX Participants'') to direct orders in listed options (''Directed Orders'') to a particular market maker on BX (''Directed Market Maker'').[12] As detailed below, a Directed Market Maker would be eligible to receive an allocated percentage of the Directed Order (40%) at all price levels at which the Directed Market Maker has a quote or order (a ''Directed Allocation'').[13] To receive a Directed Allocation, the Directed Market Maker would be required to have quotes or orders at the National Best Bid or National Best Offer (''NBBO'') at the time of the execution of the Directed Order; the Directed Market Maker would not be required to be quoting at the NBBO at the time the Directed Order is received.[14] If a Directed Order is not executed upon receipt, it would be

[1] 15 U.S.C. 78a.

[2] 17 CFR 240.19b–4.

[3] *See* Securities Exchange Act Release No. 69040 (March 5, 2013), 78 FR 15385 (''Notice'').

[4] *See* Letter, dated April 2, 2013, to Elizabeth M. Murphy, Secretary, Commission, from Janet McGuiness, Executive Vice President, Secretary and General Counsel, NYSE Euronext (''NYSE Euronext Letter 1''). For a summary of this letter, *see* Securities Exchange Act Release No. 69684 (June 3, 2013), 78 FR 34683 (June 10, 2013) (''Order Instituting Proceedings'').

[5] *See* Letter, dated April 17, 2013, to Elizabeth M. Murphy, Secretary, Commission, from Edith Hallahan, Principal Associate General Counsel, BX (''BX Letter 1''). For a summary of this letter, *see* Order Instituting Proceedings, *supra* note 4, 78 FR at 34685.

[6] *See* Letter, dated May 10, 2013, to Elizabeth M. Murphy, Secretary, Commission, from Janet McGuiness, Executive Vice President, Secretary and General Counsel, NYSE Euronext (''NYSE Euronext Letter 2''). For a summary of this letter, *see* Order Instituting Proceedings, *supra* note 4, 78 FR at 34685.

[7] Amendment No. 1, which the Commission believes is technical in nature and not subject to notice and comment, clarifies that, when a Directed Order (as defined below) is submitted in an options class that is subject to the price/time priority on BX, the Directed Market Maker's Directed Allocation (as defined below) would be capped at 40%, unless the Directed Market Maker's size at the first position in time priority at that price exceeds 40%, in which case the Directed Market Maker would have priority for that size.

[8] *See* Order Instituting Proceedings, *supra* note 4.

[9] *See* Letter, dated July 1, 2013, to Elizabeth M. Murphy, Secretary, Commission, from Edith Hallahan, Principal Associate General Counsel, BX (''BX Letter 2'').

[10] *See* Letter, dated July 15, 2013, to Elizabeth M. Murphy, Secretary, Commission, from Janet McGuiness, Executive Vice President, Secretary and General Counsel, NYSE Euronext (''NYSE Euronext Letter 3'').

[11] *See* Letter, dated August 28, 2013, to Elizabeth M. Murphy, Secretary, Commission, from Edith Hallahan, Principal Associate General Counsel, BX (''BX Letter 3'').

[12] Specifically, BX proposes to add BX Chapter VI, Section 1(e)(1) to Chapter VI to define a Directed Order as ''an order to buy or sell which has been directed (pursuant to BX's instructions on how to direct an order) to a particular Market Maker (''Directed Market Maker'') after the opening.'' BX also proposes to amend BX Chapter VI, Section 6(a)(2) to include Directed Order to the list of orders handled within the BX System.

[13] Proposed BX Chapter VI, Section 10(3)(iv)(C).

[14] For example, as shown in Example 4 in the Notice, if BX was not at the National Best Offer (''NBO'') and the Directed Market Maker was quoting one tick away from the NBO at the time a Directed Order was received, once the NBO was exhausted and BX became the new NBO, the Directed Order could be executed at this new NBO and the Directed Market Maker would receive its Directed Allocation, even though the Directed Market Maker was not at the NBO at when the order was received.

placed on the BX book and would retain its status as a Directed Order.[15]

The calculation of a Directed Market Maker's Directed Allocation would depend on whether the Directed Order is submitted in an options class that is subject to price/time priority or in an options class that is subject to the size pro-rata execution algorithm on BX. Specifically, if an option is subject to price/time priority, a Directed Market Maker who has time priority at a particular price would receive the amount of the Directed Order equal to the Directed Market Maker's quotes/orders with time priority at that price. However, if the Directed Market Maker does not have time priority for a size equal to or greater than 40% of the Directed Allocation, the Directed Market Maker would receive a Directed Allocation of 40% of the Directed Order at a particular price.[16]

If a Directed Order is submitted in an options class that is subject to the size pro-rata execution algorithm, any public customer limit orders resting on the limit order book at the execution price would first be executed against the Directed Order.[17] Once all public customer limit orders are executed, the Directed Market Maker would receive the greater of: (1) The pro-rata allocation to which such Directed Market Maker would be entitled or (2) 40% of the original size of the Directed Order at that particular price. Once the Directed Allocation is determined, BX proposes to allocate all remaining contracts of the Directed Order on a size pro-rata basis among all remaining participants (except for the Directed Market Maker).

If the calculation of the 40% Directed Allocation results in a fractional remainder, BX proposes to round up the Directed Market Maker's Directed Allocation to the next whole number whether the Directed Order is submitted in an options class subject to price/time priority or in an options class that is subject to the size pro-rata execution algorithm.[18] In addition, the Directed Market Maker would not be entitled to receive a number of contracts that is greater than the size associated with its quote or order at a particular price.[19]

BX also proposes to reduce the quoting obligations applicable to its Market Makers that are not Directed Market Makers. Currently, BX Market Makers are required to quote during regular market hours on a continuous basis (*i.e.,* 90% of the trading day) in at least 60% of the series in options in which the Market Maker is registered. The proposed rule would reduce this requirement such that Market Makers would be required to quote 60% of the trading day (as a percentage of the total number of minutes in such trading day) or such higher percentage as BX may announce in advance, in all options in which the Market Maker is registered.

The quoting obligations applicable to Directed Market Makers would be higher than those applicable to Market Makers that are not Directed Market Makers. Specifically, Directed Market Makers would be required to quote such options 90% of the trading day (as a percentage of the total number of minutes in such trading day) or such higher percentage as BX announces in advance, applied collectively to all series in all of the option classes in which the Directed Market Maker receives Directed Orders (rather than on an option-by-option basis). Once a Directed Market Maker receives a Directed Order, the heightened quoting obligation is triggered and applies to the options in which the Directed Market Maker receives the Directed Order. The Directed Market Maker would be required to comply with the heightened quoting requirements only upon receiving a Directed Order in a class, and the heightened quoting requirements would be applicable until the end of the calendar month.

III. Discussion

Under Section 19(b)(2)(C) of the Act, the Commission shall approve a proposed rule change of a self-regulatory organization if the Commission finds that such proposed rule change is consistent with the requirements of the Act, and the rules and regulations thereunder that are applicable to such organization.[20] The Commission shall disapprove a proposed rule change if it does make such a finding.[21] The Commission's Rules of Practice, under Rule 700(b)(3), state that the ''burden to demonstrate that a proposed rule change is consistent with the [Act] . . . is on the self-regulatory organization that proposed the rule change'' and that a ''mere assertion that the proposed rule change is consistent with those requirements . . . is not sufficient.'' [22]

After careful consideration, the Commission does not find that the proposed rule change is consistent with the requirements of the Act and the rules and regulations thereunder applicable to a national securities exchange.[23] In particular, the Commission does not find that the proposed rule change is consistent with Section 6(b)(5) of the Act,[24] which requires that the rules of a national securities exchange be designed, among other things, to prevent fraudulent and manipulative acts and practices, to promote just and equitable principles of trade, to remove impediments to and perfect the mechanism of a free and open market and a national market system, and to protect investors and the public interest.

In the Order Instituting Proceedings, the Commission summarized the comments received and BX's response, and noted several concerns that raise questions as to whether the BX proposal is consistent with the requirements of Section 6(b)(5) of the Act, including whether the proposed process for handling Directed Orders would promote just and equitable principles of trade, perfect the mechanism of a free and open market and the national market system, or protect investors and the public interest.[25] Specifically, the Commission stated that the proposal raises the following issues: (1) Whether BX's proposal would protect investors in that the proposal would provide Directed Market Makers with priority for Directed Allocations ahead of public customer limit orders that arrived first in time; and (2) how the proposed rules

[15] Proposed BX Chapter VI, Section 10(3)(iv)(C). For example, if a marketable non-routable Directed Order to buy is received on BX and BX is not quoting at the NBO, the order could not be executed on BX and could not route. *See* BX Chapter VI, Section 7(b)(3)(C) (providing that ''[a]n order will not be executed at a price that trades through another market. . . .''). Thus, under BX's rules, the order would be posted on the BX book at the current NBB but displayed one minimum price increment below the NBO. *See* BX Chapter VI, Section 7(b)(3)(C). If the market moves such that the BX best offer is now the NBO, the Directed Order would be executed against the BX best offer, which is now the NBO, and the Directed Market Maker would receive a Directed Allocation of 40% of the Directed Order. *See* Notice, *supra* note 3, at 15390.

[16] Proposed BX Chapter VI, Section 10(3)(i)(A). *See also* Amendment No. 1, *supra* note 7.

[17] Proposed BX Chapter VI, Section 10(3)(i)(B).

[18] Proposed BX Chapter VI, Section 10(3)(iv)(B).

[19] Proposed BX Chapter VI, Section 10(3)(iv)(A).

[20] 15 U.S.C. 78s(b)(2)(C)(i).

[21] 15 U.S.C. 78s(b)(2)(C)(i); *see also* 17 CFR 201.700(b)(3) and note 25 *infra,* and accompanying text.

[22] 17 CFR 201.700(b)(3). The description of a proposed rule change, its purpose and operation, its effect, and a legal analysis of its consistency with applicable requirements must all be sufficiently detailed and specific to support an affirmative Commission finding. *See id.* Any failure of a self-regulatory organization to provide the information solicited by Form 19b–4 may result in the Commission not having a sufficient basis to make an affirmative finding that a proposed rule change is consistent with the Act and the rules and regulations issued thereunder that are applicable to the self-regulatory organization. *Id.*

[23] In disapproving the proposed rule change, the Commission has considered the proposed rule's impact on efficiency, competition, and capital formation. 15 U.S.C. 78c(f).

[24] 15 U.S.C. 78f(b)(5).

[25] *See* Order Instituting Proceedings, *supra* note 4, at 34686.

would impact quote competition on BX, and how any impact on quote competition on BX in turn would impact execution quality on BX.[26] The Commission invited interested persons to submit written views with respect to these concerns. The Commission received three letters in response to the Order Instituting Proceedings, two of which were from BX.[27]

The Commission recognizes that it has previously approved rules of other national securities exchanges that provide for directed order programs.[28] BX's proposed Directed Order rules, however, deviate from the directed order rules of other exchanges previously approved by the Commission, as described in more detail below. First, BX proposes to provide a Directed Market Maker time priority over pre-existing customer orders in certain instances. In addition, unlike other exchanges with directed order programs, BX would not require its Directed Market Makers to quote at the NBBO at the time a Directed Order is *received* to be eligible to receive an execution guarantee; rather, BX would only require its Directed Market Makers to be at the NBBO at the time the Directed Order is *executed.* BX also deviates from other exchanges in its proposal to apply heightened quoting requirements only after a Directed Market Maker receives a Directed Order in a given month.

A. No Public Customer Priority

As outlined above, BX's proposed Directed Order rule would provide, in options classes utilizing the price/time allocation methodology, the Directed Market Maker with priority for the 40% allocation ahead of public customer orders. Specifically, the Directed Market Maker's allocation would go ahead of public customer orders that otherwise had time priority over the Directed Market Maker's quote.

NYSE Euronext commented on this aspect of BX's proposal, noting that, under BX's proposal, a Directed Market Maker that submits a quote after a public customer who has aggressively improved the NBBO would receive a Directed Allocation that the earlier-arriving public customer could potentially have completely filled. According to NYSE Euronext, public customers would not be fully rewarded for providing an aggressive quote and thus the incentives to improve the NBBO would decrease, resulting in fewer displayed public customer orders and fewer public customers willing to improve the NBBO.[29]

In response to NYSE Euronext's comment letter, BX argues that customer priority is not mandated by the Act or the rules and regulations thereunder.[30] BX also argues that it is reasonable and consistent with applicable statutory standards for a Directed Market Maker's quote to execute against a Directed Order before a priority customer order that goes ahead of the Directed Market Maker quote in time priority, stating that public customer orders are not precluded from participating in the trade, but rather continue to stand in time priority once the Directed Order's execution guarantee is satisfied.[31] BX contends that public customers may not have otherwise received an execution on BX because the Directed Market Maker may have attracted the Directed Order to BX as a result of the Directed Market Maker's relationship with the order flow provider.[32]

NYSE Euronext also notes the longstanding history of distinguishing public customers from professionals and allowing advantages to public customer orders.[33] NYSE Euronext states its belief that BX is attempting to ''turn this distinction [between a public customer and a professional] on its head'' by providing preferential treatment to sophisticated professionals rather than public customers.[34] NYSE Euronext argues further that it would be inconsistent with the protection of investors if other exchanges followed the approach of treating directed orders in the same manner as BX, resulting in public customers losing priority and receiving fewer fills.[35]

In response, BX states its view that the distinction between public customers and professionals was rooted in floor-based trading models where customers were not charged fees and in pro rata priority models where there were opportunities for professionals to ''size out'' public customers, therefore there was a particular need for public customer priority.[36] BX argues that currently other trading models are used by the options exchanges, and that under a price/time model public customers do not need the same protection as under a pro rata model. BX also argues that its proposal rewards a specific category of market participants who have general market making obligations that are critical to the functioning of the market in addition to enhanced obligations, which qualify them for a Directed Allocation.[37] In response to NYSE Euronext's argument that it would be inconsistent with the protection of investors if other exchanges followed the approach of treating directed orders in the same manner as BX, BX notes that NYSE Euronext can choose not to adopt a similar approach on its markets, and if BX's proposed approach is not successful based on its treatment of customer orders, NYSE Euronext might benefit.[38] BX also reiterates its argument that Directed Orders attract liquidity to the Exchange, and that a customer order on BX could remain unfilled if a Directed Order is not routed to BX, in favor of another option exchange that would allow the order to be directed to a particular market maker.[39]

The directed order rules of other exchanges all provide for public customer priority over directed order market makers at a particular price level, whether the exchange has a pro-rata allocation methodology or a price/time allocation methodology.[40] The

[26] *Id.*

[27] *See* BX Letter 2, *supra* note 9 and NYSE Euronext Letter 3, *supra* note 10; *see also* BX Letter 3, *supra* note 11.

[28] *See* Securities Exchange Act Release No. 51759 (May 27, 2005), 70 FR 32860 at 32861 (June 6, 2005) (SR–Phlx–2004–91) (''Phlx Order''); *see also e.g.,* Securities Exchange Act Release Nos. 47628 (April 3, 2003), 68 FR 17697 (April 10, 2003) (SR–CBOE–00–55) (''CBOE Order''); 52331 (August 24, 2005), 70 FR 51856 (August 31, 2005) (SR–ISE–2004–16) (''ISE Order''); 59472 (February 27, 2009) 74 FR 9843 (March 6, 2009) (SR–NYSEALTR–2008–14) (''NYSEALTR Order''); 60469 (August 10, 2009), 74 FR 41478 (August 17, 2009) (SR–NYSEArca–2009–73) (''NYSE Arca Notice''); and 68070 (October 18, 2012), 77 FR 65037 (October 18, 2012) (SR–C2–2012–24) (''C2 Order'').

[29] *See* NYSE Euronext Letter 2, *supra* note 6, at 3–4.

[30] *See* BX Letter 2, *supra* note 9, at 3.

[31] *See* Notice, *supra* note 3, at 15388. *See also* BX Letter 2, *supra* note 9, at 3–4.

[32] *Id.*

[33] *See* NYSE Euronext Letter 2, *supra* note 6, at 3–4.

[34] *See* NYSE Euronext Letter 3, *supra* note 10, at 4. *See also* NYSE Euronext Letter 2, *supra* note 6, at 2–3.

[35] *See* NYSE Euronext Letter 3, *supra* note 10, at 5. (citing Securities Exchange Act Release No. 42808 (May 22, 2000), 65 FR 34515, 34517 (May 30, 2000) (SR–ISE–00–01)).

[36] *See* BX Letter 2, *supra* note 9, at 3.

[37] *See* BX Letter 3, *supra* note 11, at 2.

[38] *Id.*

[39] *Id.; see also* BX Letter 2, *supra* note 9, at 3–4.

[40] *See, e.g.,* C2 Rules 6.12 and 8.17; CBOE Rule 8.13; NYSE Rule 964NY; and ISE Rule 713 (pro-rata allocation methodology) and NYSE Arca Rule 6.76A (time priority allocation methodology. *See, e.g.,* Securities Exchange Act Release 42808 (May 22, 2000), 65 FR 34515, 34517 (May 30, 2000) (SR–ISE–00–01) (''Although the Commission recognizes that intramarket competition, as well as protection of public customers, could be compromised if such a participation right constituted an absolute guarantee or if it consumed too great a percentage of order flow, the Commission believes that the ISE's proposal sets forth reasonable safeguards against such potential harms. The ISE's proposal prioritizes public customer limit orders on the book. Indeed, if sufficient existing customer interest exists a PMM might not receive any allocation of a given incoming order. . . . The Commission believes that these limits on a PMM's participation

rules of the one options exchange that has a directed order program in a price/time allocation market do not allow the directed market maker participation entitlement to step ahead of customer orders that have time priority over the directed market maker's quote or order.[41] Similar to the other exchanges, under BX's proposal, if the option is subject to the pro-rata execution algorithm, public customer limit orders resting on the limit order book at the execution price will execute against the Directed Order first, before the 40% allocation to the Directed Market Maker.[42] To the contrary, however, BX's proposal would not protect any public customer orders under a price/time allocation methodology. Instead, it would allow the Directed Market Maker's quote or order to go ahead of earlier-arriving public customer orders based solely on the relationship of the Directed Market Maker with the order flow provider that sent the Directed Order.

The Commission believes that BX's failure to accord protection to public customer orders would result in an execution allocation that is inconsistent with Section 6(b)(5) of the Act, which requires that the rules of an exchange must designed, among other things, to protect investors.[43] Specifically, rather than giving priority to public customer orders or placing public customers and Directed Market Makers on an equal footing, BX's proposal would, by allowing Directed Market Maker quotes or orders to ''jump'' the price/time queue over previously received public customers limit orders, disadvantage public customer orders in order to give a trading benefit to Directed Market Makers in contravention of Section 6(b)(5) of the Exchange Act.[44]

B. NBBO Quoting Requirement

Unlike other exchanges with directed order programs, BX would not require its Directed Market Makers to be quoting at the NBBO at the time a Directed Order is *received* to be eligible to receive an execution guarantee.[45] Rather, BX would only require its Directed Market Makers to be quoting at the NBBO at the time the Directed Order is *executed*.[46] In its filing, BX supports this aspect of its proposal by stating its belief that because executions occur across multiple prices with simultaneous routing, the availability of the participation entitlement should not be limited by the requirement that Directed Market Makers be quoting at the NBBO at the time the Directed Order is received.[47]

NYSE Euronext expressed concern with BX's proposed rule to allow a Market Maker to receive a Directed Allocation when the Market Maker does not have a quote at the NBBO at the time the Directed Order is received by BX. NYSE Euronext stated that in approving rule proposals that guarantee an allocation to a market maker, the Commission has consistently focused on two distinct aspects of the proposals, one of which is that the market maker's quote is equal to the NBBO at the time of receipt of the order.[48] NYSE Euronext states that the Commission has granted the increased reward of a preferential directed order allocation only to market makers who are taking the commensurate risk of quoting at the NBBO, and appropriately so: posting firm quotes acceptable by all participants at the NBBO is a benefit to all participants in that it fosters price discovery and transparency.[49]

NYSE Euronext states that BX's proposed rule would be unprecedented and would be detrimental to transparency and price discovery by destroying incentives for market makers to quote aggressively at the NBBO.[50] Specifically, NYSE Euronext argues that by rewarding market makers whose quotes are not the most aggressive, the BX proposal will encourage market makers to quote away from the inside market, and that the Exchange's proposal would deteriorate market makers' incentives to compete for incoming orders based on price.[51] According to NYSE Euronext, a market maker could ''lay in wait'' outside the NBBO, allowing other participants to participate in the order at less attractive prices, while the market maker receives a 40% participation entitlement for that portion of the Directed Order that trades at the more attractive price.[52] NYSE Euronext also believes that Directed Market Makers will have no incentive to match or improve the NBBO of a thinly traded option due to the low risk that a Directed Order will be fully executed against a better-priced order.[53]

NYSE Euronext further argues that, although BX believes its proposed rule will increase depth of market, BX fails to acknowledge that such an increase would be the result of fewer Directed Market Makers quoting at the NBBO.[54] Rather than create additional liquidity, NYSE Euronext believes that BX's proposal would shift liquidity from the top-of-book to depth-of-book.[55]

In response to these concerns, BX acknowledges that its proposal does break new ground, but stresses that to receive an execution of a Directed Order, a Directed Market Maker must be quoting at the NBBO at the time of execution, and that there would never be an allocation to a quote outside the NBBO.[56] BX maintains that its proposed program will help make market makers quote more competitively, not less.[57] Specifically, BX notes that, in order for a Directed Market Maker to execute an order at a particular price, all orders at more aggressive prices will first have to be executed.[58] As a result, BX believes that Directed Market Makers will be incentivized to provide their best quote and add depth to the market.[59]

BX also argues that a market maker who chooses to quote at a price other than the inside is providing value and depth at that price when orders trade at

right should assure reasonable protection for public customers and prevent impediments to a free and open market that might otherwise result from an absolute specialist guarantee.'') (order approving rules related to market maker participation rights).

[41] *See* NYSE Arca Rule 6.76A, which provides that the participation entitlement has priority over other orders *except* customer orders that were ranked ahead of the directed market maker's quote or order in time priority. *See* NYSE Arca Notice, *supra* note 28, at 41479.

[42] Proposed BX Chapter VI, Section 10(3)(i)(B).

[43] 15 U.S.C. 78f(b)(5).

[44] 15 U.S.C. 78f(b)(5).

[45] *See, e.g.,* Securities Exchange Act Release 51818 (June 10, 2005), 70 FR 35146, 35149–50 (June 16, 2005) (SR–ISE–2005–18) (''The Commission has previously approved rules that guarantee a Primary Market Maker a portion of each order when the Primary Market Maker's quote is equal to the NBBO . . . . [A] Preferred Market Maker will have to be quoting at the NBBO at the time the Preferenced Order is received to capitalize on the participation guarantee. The Commission believes it is critical that the Preferred Market Maker cannot step up and match the NBBO after it receives an order, but must be publicly quoting at that price when the order is received.'') (order approving rules relating to preferencing of market maker orders).

[46] Under BX's proposal, if the Directed Market Maker is not at the NBBO at the time a Directed Order is received, the order would first execute against available interest at the NBBO. If the orders at the NBBO on BX and on away markets are executed so that the Directed Market Maker is at the NBBO, and there is remaining size available from the Directed Order, the Directed Market Maker would receive its execution guarantee (40% of the remaining shares) at each price level at which the Directed Market Maker has quotes/orders.

[47] *See* Notice, *supra* note 3, at 15389.

[48] *See* NYSE Euronext Letter 2, *supra* note 6, at 2.

[49] *See* NYSE Euronext Letter 1, *supra* note 4, at 5.

[50] *Id.*

[51] *See* NYSE Euronext Letter 2, *supra* note 6, at 1.

[52] *See* NYSE Euronext Letter 1, *supra* note 4, at 5.

[53] *See* NYSE Euronext Letter 2, *supra* note 6, at 4.

[54] *See* NYSE Euronext Letter 3, *supra* note 10, at 2.

[55] *Id.* at 4.

[56] *See* BX Letter 1, *supra* note 5, at 2.

[57] *See* BX Letter 3, *supra* note 11, at 2.

[58] *See* BX Letter 1, *supra* note 5, at 3.

[59] *Id.*

multiple price levels and when that price becomes the NBBO, thus benefitting investors.[60] In particular, BX argues that its proposal addresses the reality of multiple prices and creates an ability to efficiently execute a larger volume of an order, particularly when the NBBO is for a small size. Thus, according to BX, its proposal ''recognizes the new NBBO and *preserves* the requirement that the Directed Market Maker be at the NBBO'' (emphasis in original).[61]

BX disagrees with NYSE Euronext's contention that liquidity would be shifted from the top-of-book to depth-of-book. BX instead contends that market participants and market makers in particular have independent and varied motivations for their pricing decisions and pricing points and that a directed order program would not affect those motivations.[62] BX argues that a market maker who chooses to quote at a price other than the inside is providing value and depth at that price when orders trade at multiple price levels as well as when that price level becomes the NBBO.[63]

The Commission has considered the arguments raised by both BX and NYSE Euronext. On the one hand, the existing requirement to be quoting at the NBBO in order to receive a directed order may incentivize market makers to quote tighter spreads, and therefore contribute to more efficient markets. On the other hand, BX's proposal to allow Directed Market Makers to receive Directed Orders when they are not quoting at the NBBO at the time of receipt of the Directed Order may, as BX argues, contribute to greater depth in the market, which also could contribute to market efficiency. However, BX has not provided sufficient information in its proposal to overcome the Commission's fundamental concerns about the impact the proposal could have on participants' incentives to quote competitively and the potential impact on overall prices in the market. For example, a directed market maker's incentive to quote in the depth-of-book is likely related to the frequency with which marketable orders execute against not just the NBBO but also the depth-of-book. BX, however, has not provided any analysis regarding the frequency or nature of such marketable orders or any data showing the interaction of such orders with the market makers' orders or quotes. Accordingly, the Commission does not believe that BX has met its burden in demonstrating that this aspect of the proposed rule change is consistent with the Act.[64]

C. Application of Heightened Quoting Requirement

The rules approved by the Commission governing the directed order programs of other options exchanges require that directed market makers on those exchanges satisfy quoting requirements that are higher than those imposed on market makers not receiving directed orders.[65] BX also would impose a heightened quoting requirement on its Directed Market Makers that receive Directed Orders. However, unlike the directed order rules in place at other options exchanges, BX proposes that the heightened quoting requirements for its Directed Market Makers apply only *after* the Directed Market Maker receives its first Directed Order in a given month. BX argues that this provision is appropriate because a Directed Market Maker does not know if and when it will receive a Directed Order, and therefore should not be required to quote at a heightened level unless and until it receives a Directed Order.[66] BX also argues that if the Directed Market Maker is not quoting, the Directed Order will not execute against such Directed Market Maker and thus the Directed Market Maker has an incentive to quote competitively in as many series as possible to attract Directed Orders. BX then asserts its view that this provision properly balances the benefit of receiving enhanced allocations with the obligations of heightened quoting.[67]

The Commission does not believe that BX has sufficiently demonstrated why requiring Directed Market Makers to be quoting at a heightened level only after receiving a Directed Order would not inappropriately upset the balance between a Directed Market Maker's obligations (including quoting obligations) and the benefits it receives (*i.e.,* its participation entitlement). Accordingly, the Commission does not believe that BX has met its burden in demonstrating that this aspect of the proposed rule change is consistent with the Act.[68]

IV. Conclusion

For the reasons set forth above, the Commission does not believe that BX has met its burden to demonstrate that the proposed rule change is consistent with the requirements of the Act and the rules and regulations thereunder applicable to a national securities exchange, and in particular, Section 6(b)(5) of the Act.

It is therefore ordered, pursuant to Section 19(b)(2) of the Act, that the proposed rule change (SR–BX–2013–016) be, and hereby is, disapproved.

For the Commission, by the Division of Trading and Markets, pursuant to delegated authority.[69]

Kevin M. O'Neill,

Deputy Secretary.

[FR Doc. 2013–25829 Filed 10–30–13; 8:45 am]

BILLING CODE 8011–01–P

SECURITIES AND EXCHANGE COMMISSION

[Release No. 34–70757; File No. SR–ISE–2013–53]

Self-Regulatory Organizations; International Securities Exchange, LLC; Notice of Filing and Immediate Effectiveness of a Proposed Rule Change To Amend the Schedule of Fees

October 25, 2013.

Pursuant to Section 19(b)(1) of the Securities Exchange Act of 1934 (the ''Act''),[1] and Rule 19b–4 thereunder,[2] notice is hereby given that on October 17, 2013, the International Securities Exchange, LLC (the ''Exchange'' or ''ISE'') filed with the Securities and Exchange Commission (the ''Commission'') the proposed rule change as described in Items I, II, and III below, which Items have been prepared by the self-regulatory organization. The Commission is publishing this notice to solicit comments on the proposed rule change from interested persons.

I. Self-Regulatory Organization's Statement of the Terms of Substance of the Proposed Rule Change

The ISE proposes to amend its network fees. The text of the proposed rule change is available on the Exchange's Web site (*http://www.ise.com*), at the principal office of

[60] *See* BX Letter 1, *supra* note 5, at 3. *See also* BX Letter 2, *supra* note 9, at 2.

[61] *See* BX Letter 1, *supra* note 5, at 2. *See also* BX Letter 2, *supra* note 9, at 2, 4.

[62] *See* BX Letter 3, *supra* note 11, at 2.

[63] *Id.*

[64] 17 CFR 201.700(b)(3).

[65] *See* C2 Rule 8.17; CBOE Rule 8.13; ISE Rule 811; NYSE Rule 964NY; NYSEArca Rule 6.88; and Phlx Rule 1014.

[66] *See* BX Letter 2, *supra* note 9, at 4. The proposal would allow a Market Maker to accept Directed Orders at the end of each month and then only quote at a heightened level for the remainder of that month.

[67] *Id.*

[68] 17 CFR 201.700(b)(3).

[69] 17 CFR 200.30–3(a)(12).

[1] 15 U.S.C. 78s(b)(1).

[2] 17 CFR 240.19b–4.

the Exchange, and at the Commission's Public Reference Room.

II. Self-Regulatory Organization's Statement of the Purpose of, and Statutory Basis for, the Proposed Rule Change

In its filing with the Commission, the self-regulatory organization included statements concerning the purpose of, and basis for, the proposed rule change and discussed any comments it received on the proposed rule change. The text of these statements may be examined at the places specified in Item IV below. The self-regulatory organization has prepared summaries, set forth in sections A, B, and C below, of the most significant aspects of such statements.

A. Self-Regulatory Organization's Statement of the Purpose of, and Statutory Basis for, the Proposed Rule Change

1. Purpose

The purpose of this proposed rule change is to amend the Exchange's network fees. Specifically, the Exchange proposes to adopt a network fee for a new 40 Gigabit (Gb) low latency Ethernet connectivity option. The Exchange currently offers three Ethernet connection options, a 1 Gb connection at a cost of $500 per month, a 10 Gb connection at a cost of $4,000 per month, and a 10 Gb low latency connection at a cost of $7,000 per month.

In keeping with changes in technology, the Exchange now proposes to provide an enhanced bandwidth option to enable a more efficient connection to the Exchange. The growth in the size of consolidated and proprietary data feeds has resulted in demand for higher bandwidth. As the number of feeds available and the size of the feeds increases, the bandwidth required for market data feeds steadily rises. Through the use of new, advanced hardware, the proposed new connectivity option will provide increased bandwidth and improved latency, and will thereby satisfy demand for more efficient, lower latency connections to the Exchange's trading system.

The Exchange proposes to charge $12,500 per month for this connection. ISE has expended significant amount of resources in developing this infrastructure and the proposed fees will allow the Exchange to recoup its investment. The Exchange's new network connectivity option will provide Members the option to select the bandwidth that is appropriate for their current needs. This new connectivity option is voluntary and, therefore, the Exchange will retain the existing connectivity options for those Members who choose not to utilize the new network connection.

2. Statutory Basis

The Exchange believes that the proposed rule change is consistent with the provisions of Section 6 of the Securities Exchange Act of 1934 (''Act''),[3] in general, and with Section 6(b)(4) of the Act,[4] in particular, in that it provides for the equitable allocation of reasonable dues, fees and other charges among Exchange members and other persons using its facilities.

The Exchange's new low latency 40 Gb Ethernet network connection will provide Members the ability to increase data transmission and reduce latency, thereby enhancing their operations. The Exchange believes the proposed fees for this new connection to the Exchange are reasonable because the fees charged will allow the Exchange to cover the hardware, installation, testing and connection costs to maintain and manage the enhanced connection. The proposed fees will allow the Exchange to recoup costs associated with providing the low latency 40 Gb connection while aiding Members in making their network connectivity more efficient, and reducing the potential for data spikes and data gapping issues that result from the transmission of the growing size of the consolidated and proprietary market data feeds. Moreover, the Exchange believes that the proposed fees are reasonable in that they are lower than the fees charged by other trading venues for similar connectivity services.[5]

The Exchange further believes that the proposed change is reasonable because the proposed fees directly relate to the level of services provided by the Exchange and, in turn, received by Members connecting to the exchange. In this regard, the fees proposed for 40 Gb connections are higher than, for example, the fees for 10 Gb connections because costs for the initial purchase and ongoing maintenance of the 40 Gb connections are generally higher than those of the lower-bandwidth connections. However, these costs are not anticipated to be four times higher than the existing 10 Gb connection. The Exchange therefore notes that while the proposed bandwidth of the low latency 40 Gb connection is four times greater than the existing low latency 10 Gb connection, the proposed fees for the 40 Gb connection are significantly less than four times the fees for the 10 Gb connection. The Exchange believes that this supports a finding that the proposed pricing is reasonable because the Exchange anticipates realizing efficiencies as customers adopt higher-bandwidth connections, and is in turn reflecting such efficiencies in the pricing for the new connectivity option.

The Exchange also believes the proposed fee for 40 Gb connectivity to the Exchange is equitably allocated in that all Members that voluntarily select this service option will be charged the same amount to maintain and manage the enhanced connection. Moreover, the Exchange believes the proposed 40 Gb fee for connectivity to the Exchange is not unfairly discriminatory in that all Members will have the option of selecting the 40 Gb connection, and there is no differentiation among Members with regard to the fees charged for this option.

B. Self-Regulatory Organization's Statement on Burden on Competition

In accordance with Section 6(b)(8) of the Act,[6] the Exchange believes that the proposed rule change will not impose any burden on intermarket or intramarket competition that is not necessary or appropriate in furtherance of the purposes of the Act. Instead, the Exchange believes that the proposed change will enhance competition by making a service available to Members and thereby satisfy demand for more efficient, lower-latency connections. The proposed low latency 40 Gb connection would make a service available to Members that require the increased bandwidth, but Members that do not require the increased bandwidth could continue to request an existing lower-bandwidth connection and pay the correspondingly lower fees.

The Exchange notes that it operates in a highly competitive market in which Members can readily direct their order flow to competing venues if they deem fee levels at a particular venue to be excessive. In such an environment, the Exchange must continually review, and consider adjusting, its fees to remain competitive with other exchanges. For the reasons described above, the Exchange believes that the proposed fee

[3] 15 U.S.C. 78f.

[4] 15 U.S.C. 78f(b)(4).

[5] For example, NYSE Arca Options charges $20,000 per month for a 40 Gb liquidity center network connection plus a $15,000 per connection initial charge. *See* Securities Exchange Act Release No. 70286 (Aug. 29, 2013) 78 FR 54710 (Sept. 5, 2013) (SR–NYSEARCA–2013–82). NASDAQ OMX PHLX, LLC charges $15,000 per month for a 40 Gb fiber connection with an installation fee of $1,500. *See* Securities Exchange Act Release No. 66429 (Feb. 21, 2012) 77 FR 11611 (Feb. 27, 2013) (SR–PHLX–2012–20).

[6] 15 U.S.C. 78f(b)(8).

changes reflect this competitive environment.

C. Self-Regulatory Organization's Statement on Comments on the Proposed Rule Change Received From Members, Participants, or Others

The Exchange has not solicited, and does not intend to solicit, comments on this proposed rule change. The Exchange has not received any unsolicited written comments from members or other interested parties.

III. Date of Effectiveness of the Proposed Rule Change and Timing for Commission Action

The foregoing rule change has become effective pursuant to Section 19(b)(3)(A) of the Act [7] and paragraph (f) of Rule 19b–4 [8] thereunder. At any time within 60 days of the filing of the proposed rule change, the Commission summarily may temporarily suspend such rule change if it appears to the Commission that such action is necessary or appropriate in the public interest, for the protection of investors, or otherwise in furtherance of the purposes of the Act. If the Commission takes such action, the Commission will institute proceedings to determine whether the proposed rule change should be approved or disapproved.

IV. Solicitation of Comments

Interested persons are invited to submit written data, views, and arguments concerning the foregoing, including whether the proposed rule change is consistent with the Act. Comments may be submitted by any of the following methods:

Electronic Comments

- Use the Commission's Internet comment form (*http://www.sec.gov/rules/sro.shtml*); or
- Send an email to *rule-comments@sec.gov*. Please include File Number SR–ISE–2013–53 on the subject line.

Paper Comments

- Send paper comments in triplicate to Elizabeth M. Murphy, Secretary, Securities and Exchange Commission, 100 F Street NE., Washington, DC 20549–1090.

All submissions should refer to File Number SR–ISE–2013–53. This file number should be included on the subject line if email is used. To help the Commission process and review your comments more efficiently, please use only one method. The Commission will post all comments on the Commission's Internet Web site (*http://www.sec.gov/rules/sro.shtml*). Copies of the submission, all subsequent amendments, all written statements with respect to the proposed rule change that are filed with the Commission, and all written communications relating to the proposed rule change between the Commission and any person, other than those that may be withheld from the public in accordance with the provisions of 5 U.S.C. 552, will be available for Web site viewing and printing in the Commission's Public Reference Room, 100 F Street NE., Washington, DC 20549 on official business days between the hours of 10:00 a.m. and 3:00 p.m. Copies of the filing also will be available for inspection and copying at the principal office of the Exchange. All comments received will be posted without change; the Commission does not edit personal identifying information from submissions. You should submit only information that you wish to make available publicly. All submissions should refer to File Number SR–ISE–2013–53 and should be submitted on or before November 21, 2013.

For the Commission, by the Division of Trading and Markets, pursuant to delegated authority.[9]

Kevin M. O'Neill,

Deputy Secretary.

[FR Doc. 2013–25830 Filed 10–30–13; 8:45 am]

BILLING CODE 8011–01–P

[7] 15 U.S.C. 78s(b)(3)(A).

[8] 17 CFR 240.19b–4(f).

[9] 17 CFR 200.30–3(a)(12).

SECURITIES AND EXCHANGE COMMISSION

[Release No. 34–70755; File No. SR–CBOE–2013–102]

Self-Regulatory Organizations; Chicago Board Options Exchange, Incorporated; Notice of Filing of Proposed Rule Change To Amend CBOE Rule 6.2B To Establish Modified Hybrid Opening System Opening Procedures for All Volatility Index Constituent Options

October 25, 2013.

Pursuant to Section 19(b)(1) of the Securities Exchange Act of 1934 (''Act'') [1] and Rule 19b–4 thereunder,[2] notice is hereby given that on October 15, 2013, the Chicago Board Options Exchange, Incorporated (''Exchange'' or ''CBOE'') filed with the Securities and Exchange Commission (''Commission'') the proposed rule change as described in Items I, II, and III below, which Items have been prepared by the self-regulatory organization. The Commission is publishing this notice to solicit comments on the proposed rule change from interested persons.

I. Self-Regulatory Organization's Statement of the Terms of Substance of the Proposed Rule Change

CBOE proposes to amend CBOE Rule 6.2B to establish modified Hybrid Opening System (''HOSS'') opening procedures for all option series that are used to calculate volatility indexes. The text of the proposed rule change is available on the Exchange's Web site *http://www.cboe.com/AboutCBOE/CBOELegalRegulatoryHome.aspx*), at the Exchange's Office of the Secretary, and at the Commission.

II. Self-Regulatory Organization's Statement of the Purpose of, and Statutory Basis for, the Proposed Rule Change

In its filing with the Commission, the self-regulatory organization included statements concerning the purpose of and basis for the proposed rule change and discussed any comments it received on the proposed rule change. The text of those statements may be examined at the places specified in Item IV below. The Exchange has prepared summaries, set forth in sections A, B, and C below, of the most significant parts of such statements.

A. Self-Regulatory Organization's Statement of the Purpose of, and Statutory Basis for, the Proposed Rule Change

1. Purpose

On the expiration/final settlement date for volatility index options and futures, modified Hybrid Opening System (HOSS) opening procedures are used for Hybrid 3.0 options and series that are used to calculate the exercise settlement/final settlement value for expiring volatility index options and futures contracts.[3] The exercise settlement/final settlement value for volatility index options and futures is a

[1] 15 U.S.C. 78s(b)(1).

[2] 17 CFR 240.19b–4.

[3] The expiration/final settlement date for volatility index options and futures is the same day that the exercise settlement/final settlement value is calculated for those contracts. *See* CBOE Rule 24.9(a)(5) and CBOE Futures Exchange, LLC (''CFE'') Rule 1202(b). This date is on the Wednesday that is thirty days prior to the third Friday of the calendar month immediately following the month in which the applicable volatility index options or futures contract expires. If the third Friday of the month subsequent to expiration of the applicable volatility index option or futures contract is a CBOE holiday, the exercise settlement/final settlement value will be calculated on the business day immediately preceding that Friday.

Special Opening Quotation (''SOQ'') of the respective volatility index calculated from the sequence of opening prices, as traded on CBOE, of a single strip of constituent options used to calculate the exercise settlement value on expiration dates. The opening price for any constituent option series in which there is no trade on CBOE is the average of that option series' bid price and ask price as determined at the opening of trading.

Standard expiration options (*i.e.,* third Friday expirations) on the S&P 500 index are the only Hybrid 3.0 option series for which modified HOSS opening procedures are utilized (''SPX option series''). SPX option series are used to calculate the CBOE Volatility Index (''VIX'' or ''VIX index'').[4] As a result, the only volatility index products whose exercise settlement/final settlement values are currently calculated in this manner are VIX options traded on CBOE and VIX futures contracts traded on CFE.

CBOE and CFE, however, trade options and futures on other volatility indexes[5] and normal HOSS opening procedures are used on all days for the constituent options in those volatility indexes, including the expiration/final settlement dates for those volatility index contracts. This is because the constituent option series of those volatility indexes trade on the Hybrid platform and the modified HOSS opening procedures for Hybrid 3.0 classes and series are not applicable to those classes and series. The purpose of this filing is to align the opening procedures for calculating the exercise settlement/final settlement value for all volatility index products as closely as possible to the existing and known modified HOSS opening procedures used to calculate the VIX exercise/final settlement value.

In addition to the existing volatility indexes calculated using Hybrid option series, the Exchange has created a new volatility index that measures a 9-day period of implied volatility: The CBOE Short-Term Volatility Index (''VXST'' or ''VXST index'').[6] The Exchange understands that there is an unmet market demand for derivatives that expire each week on a short-term volatility index. In order to respond to that demand, the Exchange plans to introduce VXST security options (to be traded on CBOE) and VXST futures (to be traded on CFE) that expire every Wednesday. These new VXST products will trade alongside existing VIX options and VIX futures, (which expire on a monthly basis) and on one Wednesday each month, the Exchange plans to calculate two exercise settlement/final settlement values based on S&P 500 index option series to settle expiring VIX and VXST options and futures.

In terms of product launches, the Exchange anticipates that CFE will list VXST futures prior to CBOE listing VXST options. This order of product launches is consistent with the past practice of introducing volatility index futures prior to volatility index options due to the use by many market participants of futures as proxies for forward volatility index levels when pricing options.

The VXST index is calculated using S&P 500 index option series that expire on every Friday, including standard SPX option series (*i.e.,* third Friday expirations). The non-standard expiration constituent S&P 500 index option series are: (1) Listed under various Exchange rules; (2) may expire on Fridays other than the third Friday of the month; (3) Hybrid series and Hybrid 3.0 series; and (4) considered part of the S&P 500 index option class. The below chart sets forth a hypothetical listing schedule identifying the VXST derivative expiration/final settlement date, the constituent S&P 500 index option series and expiration/final settlement date and the trading platform of the constituent option series:

VXST derivative expiration/final settlement date	Constituent S&P 500 index option series and expiration date	Type of constituent series
Wednesday, August 31, 2016	End-of-Week Expiration * (ticker: SPXW), Expires Friday, September 9, 2016	Hybrid.
Wednesday, September 7, 2016	Standard Expiration (ticker: SPX), Expires Friday, September 16, 2016	Hybrid 3.0.
Wednesday, September 14, 2016	End-of-Week Expiration * (ticker: SPXW), Expires Friday, September 23, 2016	Hybrid.
Wednesday, September 21, 2016	Quarterly Index Expiration ** (ticker: SPXQ), Expires on Friday, September 30, 2016	Hybrid 3.0.

* Listed under Rule 24.9(e).
** Listed under Rule 24.9(c).

As shown above, because some VXST constituent S&P 500 index option series are Hybrid series, the modified HOSS opening procedures for Hybrid 3.0 series are not applicable to those S&P 500 index option series.[7] This filing proposes to align the opening procedures on Wednesdays for all VXST constituent S&P 500 index option series to the existing and known modified HOSS opening procedures used to calculate the exercise/final settlement value for VIX derivatives.

What are the modified HOSS opening procedures?

The main feature of the modified HOSS opening procedures utilized in Hybrid 3.0 classes and series (*i.e.,* SPX options) on VIX derivative expiration/final settlement dates is the strategy order[8] cut-off time for the SPX option series that will be used to calculate the exercise settlement/final settlement value for VIX derivatives. Rule 6.2B.01(c)(iii)(B)(1)–(3) sets forth three characteristics that the Exchange considers strategy orders to possess:

(1) The orders are for options series with the expiration month that will be used to calculate the settlement price of the applicable volatility index option or futures contract;

(2) The orders are for options series spanning the full range of strike prices in the appropriate expiration month for options series that will be used to calculate the settlement price of the applicable volatility index option or futures contract, though they will not

[4] Some series of the S&P 500 index option class are Hybrid series.

[5] For example: the CBOE Nasdaq-100 Volatility Index (''VXN''), the CBOE Russell 2000 Volatility Index (''RVX''), the CBOE Gold ETF Volatility Index (''GVZ'') and the CBOE Crude Oil ETF Volatility Index (''OVX''). This list is not exhaustive.

[6] The VIX index measures a 30-day period of expected volatility and is calculated using S&P 500 index option series that expire in 30 days. The VXST index measures a 9-day period of expected volatility and is calculated using S&P 500 index option series that expire in 9 days.

[7] The Exchange is proposing this change in order to calculate a final settlement value for VXST futures contracts. The Exchange will submit a filing to the Commission to list VXST options separately.

[8] Option orders that are related to position in, or a trading strategy involving, volatility index options or futures are known as ''strategy orders,'' under Rule 6.2B.01(c)(iii).

necessarily include every available strike price; and

(3) The orders are for put options with strikes prices less than the ''at-the-money'' strike price or for call options with strike prices greater than the ''at-the-money'' strike price. The orders may also be for put and call options with ''at-the-money'' strike prices.

Rule 6.2B.01(c)(iii)(B) also gives the Exchange discretion to deem other types of orders to fall within the category of ''strategy orders'' if the Exchange determines that the applicable facts and circumstances warrant. Under current Rule 6.2B.01(c)(iii), all strategy orders must be submitted by 8:15 a.m. (Chicago time).[9] In two limited circumstances, strategy orders may be cancelled.[10]

As background, the Exchange notes that market participants that actively trade VIX derivatives (*e.g.,* options and futures) often hedge their positions with the SPX option series that will be used to calculate the VIX exercise settlement/final settlement value. Traders holding hedged VIX derivatives positions can be expected to trade out of their SPX option series on the relevant VIX expiration/final settlement date. Specifically, traders holding short, hedged VIX products would liquidate that hedge by selling their SPX option series, while traders holding long, hedged VIX products would liquidate their hedge by buying SPX option series. In order to seek convergence with the VIX exercise settlement/final settlement value, these traders would be expected to liquidate their hedges by submitting market orders or limit orders in the appropriate SPX option series during the SPX opening on the VIX expiration/final settlement date.

The strategy order cut-off time exists because trades to liquidate hedges can contribute to an order imbalance during the SPX opening on VIX expiration/final settlement dates. For example, traders liquidating hedges may predominately be on one side of the market (*e.g.,* seek to buy the particular SPX option series) and those traders' orders may create buy or sell order imbalances during the SPX opening on a VIX expiration/final settlement date. As a result of having a strategy order cut-off time in place, the Exchange has created a window to encourage additional participation in the modified HOSS opening procedures among market participants who may wish to place off-setting orders against imbalances to which strategy orders may have contributed.[11] The Exchange also hopes that during this time period market participants will also enter orders that will result in price improvement in those SPX options series that are used to calculate the VIX exercise settlement/final settlement value.

For the same reasons set forth above, the Exchange now seeks to establish a strategy order cut-off time: (1) For all constituent option series used to calculate volatility indexes on the expiration/final settlement dates for volatility index derivatives; and (2) for all constituent SPX option series used to calculate the VXST on every Wednesday.

Proposed Modified HOSS Opening Procedures for Hybrid Classes and Series

The Exchange proposes to adopt new Interpretation and Policy .08 to Rule 6.2B to set forth the modified HOSS opening procedures for Hybrid classes and series used to calculate volatility indexes.

First, the Exchange proposes to set forth the applicable days for when the modified HOSS opening procedures would apply. (All provisions set forth in Rule 6.2B would remain in effect unless superseded or modified by proposed Rule 6.2B.08.) For 30-day volatility indexes, the modified HOSS opening procedures would be utilized on the days that the exercise settlement value and final settlement value is calculated for options (as determined under Rule 24.9(a)(5)) or (security) futures contracts on volatility indexes measuring a 30-day volatility period.[12] For short-term volatility indexes, the modified HOSS opening procedures would be utilized every Wednesday for Hybrid classes and series that are used to calculate volatility indexes measuring a 9-day volatility period. If a Wednesday is an Exchange holiday or if the Friday in the business [sic] following a Wednesday is an Exchange holiday, then the modified HOSS opening procedures would be utilized on a Tuesday.[13]

Second, the Exchange proposes to provide that on applicable days, all orders in Hybrid classes and series used to calculate 30-day and short-term volatility indexes (including public customer, broker-dealer, Exchange Market-Maker, away Market-Maker and Specialist orders), other than spread or contingency orders, would be eligible to be placed on the electronic book for the purpose of permitting those orders to participate in the opening price calculation for the applicable option class or series.

Third, the Exchange proposes to establish criteria for strategy orders, a cut-off time to be established by the Exchange on a class-by-class basis and a prohibition against cancelling strategy orders; with the limited exception that would permit strategy order to be cancelled if the order is (i) not executed in the modified HOSS opening procedures and the cancellation is submitted after the procedures have concluded, or (ii) cancelled to correct a legitimate error. These proposed provisions are substantially the same as the existing provisions set forth in Rule 6.2B.01. The specific provisions proposed to be adopted are:

On the days that the modified HOSS opening procedures would be utilized, the following provisions would apply to all volatility index option components:

- All option orders for participation in modified HOSS opening procedures that are related to positions in, or a trading strategy involving, volatility index options or (security) futures, and any change to or cancellation of any such order:
  - must be received prior to the applicable strategy order cut-off time for the affected option series (established by the Exchange on a class-by-class basis), provided that the strategy order cut-off time will be no earlier than 8:00 a.m. and no later than the opening of trading in the option series. All pronouncements regarding changes to the applicable strategy order cut-off time would be announced at least one day prior to implementation.
  - may not be cancelled or changed after the applicable strategy order cut-off

[9] The applicable cut-off time for the entry of strategy orders is established by the Exchange on class-by-class. *See* Rule 6.2B.01(c)(i)(A) and CBOE Regulatory Circular RG08–43 (Cut-Off Time for Submission of Strategy Orders for Participation in SPX Modified HOSS Opening Procedure).

[10] These circumstances include when the order is not executed in the modified HOSS opening procedures and the cancellation or change is submitted after the modified HOSS opening procedures are concluded or if there is a legitimate error and the procedures for cancelling or changing a legitimate error are followed as set forth in Rule 6.2B.01(c)(iii)(B).

[11] Any imbalance of contracts to buy over contracts to sell in the applicable index option series, or vice versa, as indicated on the electronic book, as well as expected opening prices and sizes are periodically published in a snapshot form on the CBOE and CFE Web sites as soon as practicable up through the opening on settlement days when the modified HOSS opening procedures are utilized. *See* CBOE Rule 6.2B.01(vi). They are also periodically disseminated on the Hybrid trading system.

[12] *See supra* note 1 [sic].

[13] The Exchange is identifying the days that the modified HOSS opening procedures would apply in proposed Rule 6.2B.08 because those days need to be identified in order to calculate a final settlement value for VXST futures. The Exchange expects to amend this provision when the Exchange makes a filing with the Commission to list VXST options. Specifically, the Exchange plans to establish an expiration date and exercise settlement rule for VXST options that would be comparable to Rule 24.9(a)(5).

time established in accordance with paragraph (c)(i) to Rule 6.2B.08, unless the order is not executed in the modified HOSS opening procedures and the cancellation or change is submitted after the modified HOSS opening procedures are concluded (provided that any such order may be changed or cancelled after the applicable strategy order cut-off time established in accordance with paragraph (c)(i) to Rule 6.2B.08 and prior to applicable cut-off time established in accordance with paragraph (d) to Rule 6.2B.08 in order to correct a legitimate error, in which case the Trading Permit Holder submitting the change or cancellation would be required to prepare and maintain a memorandum setting forth the circumstances that resulted in the change or cancellation and shall file a copy of the memorandum with the Exchange no later than the next business day in a form and manner prescribed by the Exchange).

In general, the Exchange would consider option orders to be related to positions in, or a trading strategy involving, volatility index options or (security) futures for purposes of Rule 6.2B.08 if the orders possess the following three characteristics:

- The orders are for option series with the expirations that will be used to calculate the exercise settlement or final settlement value of the applicable volatility index option or (security) futures contract.
- The orders are for options series spanning the full range of strike prices for the appropriate expiration for options series that will be used to calculate the exercise settlement or final settlement value of the applicable volatility index option or (security) futures contract, but not necessarily every available strike price.
- The orders are for put options with strike prices less than the ''at-the-money'' strike price and for call options with strike prices greater than the ''at-the-money'' strike price. The orders may also be for put and call options with ''at-the-money'' strike prices.

Whether option orders are related to positions in, or a trading strategy involving, volatility index options or (security) futures for purposes of this Rule 6.2B.08 would depend upon specific facts and circumstances. Order types other than those provided above may also be deemed by the Exchange to fall within this category of orders if the Exchange determines that to be the case based upon the applicable facts and circumstances.

Fourth, the Exchange proposes to provide that the provisions of Rule 6.2B.08 may be suspended by two Floor Officials in the event of unusual market conditions.

Fifth, the Exchange proposes to provide that all other option orders for participation in the modified HOSS opening procedures, and any change to or cancellation of any such order, would be required to be received prior to the applicable cut-off time in order to participate at the opening price for the applicable option series. The applicable cut-off time for the affected option series would be established by the Exchange on a class-by-class basis, provided the cut-off time would be no earlier than 8:25 a.m. and no later than the opening of trading in the option series. All pronouncements regarding changes to the applicable cut-off time would be announced at least one day prior to implementation.

Sixth, the Exchange proposes to provide that any imbalance of contracts to buy over contracts to sell in the applicable option series, or vice versa, as indicated on the electronic book, would be published as soon as practicable up through the opening of trading in the affected series on days that the modified HOSS opening procedures are utilized.

The Exchange notes that there are certain provisions set forth in Rule 6.2B.01 that the Exchange is not proposing to adopt as parallel provision to proposed Rule 6.2B.08. The provisions set forth in Rules 6.2B.01(a), (b) and (c)(ii) pertain to opening requirements for liquidity providers that only apply to Hybrid 3.0 classes and series. For Hybrid classes and series, the applicable opening provisions for liquidity providers are set forth in Rule 6.2B. The key difference is that liquidity providers in Hybrid 3.0 classes and series are required to enter opening quotes whereas no such requirement exists for Hybrid classes and series.

In addition, the Exchange is not proposing to adopt a provision similar to Rule 6.2B.01(c)(v) which provides that the HOSS system automatically generates cancels immediately prior to the opening of the applicable index option series for broker-dealer, Exchange Market-Maker, away Market-Maker, and Specialist orders which remain on the electronic book following the modified HOSS opening procedures. This is another difference between Hybrid 3.0 classes and series and Hybrid classes and series in that a similar automatic cancellation function does not occur for Hybrid classes and series because orders from those participants would be permitted to rest in the electronic book following the modified HOSS opening procedures.

Proposed Non-Substantive Changes to Rule 6.2B.01

The Exchange is taking this opportunity to make some non-substantive changes to Rule 6.2B.01. First, the Exchange is proposing to delete the sentence that is set forth in from [sic] Rule 6.2B.01(b). This provision provides that (on all days), series will not open if there is not a quote present in that series that complies with the bid/ask different [sic] requirements that the Exchange establishes on a class-by-class basis. This same requirement is set forth earlier in Rule 6.2(e). Therefore, the second sentence to Rule 6.2B.01(b) can be deleted.

Second, the Exchange is proposing to amend Rule 6.2B.01(c)(i). On all days, non-customer orders in Hybrid 3.0 classes and series are not permitted to rest in the book after the open. Accordingly, non-customers must submit ''opening rotation orders'' (''OPG'') in order to participate in the opening.[14] If non-customer orders are not submitted as OPG orders, those orders will not participate in the opening rotation. An OPG order is not technically a contingency but is a requirement for non-customers to participate in the opening for Hybrid 3.0 classes and series. As a result, the Exchange proposes to add the phrase ''non-OPG'' before ''contingency orders'' in Rule 6.2B.01(c)(i) to make that rule clearer.

Third, the Exchange is proposing amend Rule 6.2B.01 to include the correct terminology conventions for options and futures throughout Rule 6.2B.01. The Exchange notes that options expire on an expiration date and settle to an exercise settlement value. Futures settle on a final settlement date and settle to a final settlement value. Where appropriate, the Exchange is adding the correct terminology throughout Rule 6.2B.01.

Fourth, the Exchange is proposing to change the reference to ''month'' as used in Rule 6.2B.01(c)(i) and (c)(iii)(B)(2) [sic] to ''expiration.'' The reference to month is used to designate which month's option series will be used to calculate a 30-day volatility index. Because options series that expire more often than monthly will be used to calculate the VXST, the Exchange is proposing to amend these provisions to account for the existence of volatility

[14] *See* Rule 6.53(l), which defines ''Opening Rotation Order.'' After the opening rotation is concluded, unfilled OPG orders are cancelled. *See also* CBOE Regulatory Circular RG07–097 (SPX Trading on Hybrid 3.0).

indexes that expire more frequently than on a once per month basis.

Fifth, the Exchange is proposing to add more specific rule citations throughout Rule 6.2B.01. Currently, there are several cross references throughout Rule 6.2B.01 to Rule 6.2B and Rule 6.2B.01. In order to be more clear (because some of the same numbering conventions are used in these provisions and could be confusing), the Exchange is proposing to add specific rule references (instead of just subparagraphs) throughout Rule 6.2B.01.

Sixth, the Exchange is proposing to replace the reference to the ''opening bell'' to [sic] the ''opening of trading in the affected series'' in Rule 6.2B.01(vi) [sic]. This change is being proposed to make that provision more specific in its description of when imbalances will be published.

Finally, the Exchange is proposing to make a few grammatical changes throughout Rule 6.2B.01.

Proposed Changes to Rule 24.9(a)(5)

The Exchange is proposing to amend Rule 24.9(a)(5), which sets forth the method of determining the day that the exercise settlement value will be calculated and of determining the expiration date and last trading day for volatility index options. Specifically, the Exchange is proposing to add the phrase ''Measure a 30-Day Volatility Period.'' This change is being proposed to account for the existence of two different volatility index products that overlie different implied volatility measurement periods. As described in footnote 13, when the Exchange makes a filing with the Commission to list VXST options, the Exchange plans to establish a proposed similar rule setting forth similar information for VXST options.

Surveillance

The Exchange currently conducts heightened surveillance on the days when the modified HOSS opening procedures are utilized. Those same heightened surveillance practices will be utilized on every Wednesday and the Exchange represents that these surveillance practices shall be adequate to monitor trading in all constituent option series used to calculate volatility indexes. The Exchange expects to enhance surveillance practices in tandem with any resultant trading volume growth.

2. Statutory Basis

The Exchange believes the proposed rule change is consistent with the Act and the rules and regulations thereunder applicable to the Exchange and, in particular, the requirements of Section 6(b) of the Act.[15] Specifically, the Exchange believes the proposed rule change is consistent with the Section 6(b)(5)[16] requirements that the rules of an exchange be designed to promote just and equitable principles of trade, to prevent fraudulent and manipulative acts, to remove impediments to and to perfect the mechanism for a free and open market and a national market system, and, in general, to protect investors and the public interest.

The primary purpose of the proposed rule change is to establish a strategy-order cut-off time for option series on the day those option series are used to calculate the exercise settlement/final settlement value for volatility index options and futures. Because those option series are typically used to hedge VIX derivatives, market participant [sic] liquidating their hedges on expiration/final settlement dates may contributed to an order imbalance. The proposed rule change will protect investors and the public interest because the strategy order cut-off time provides a time period prior to the open of trading during which market participants may help reduce order imbalances for volatility index options. The Exchange notes that a series will not open if there is an imbalance. By creating a window of opportunity to enter orders that reduce any order imbalances to which strategy orders may have contributed, the Exchange is establishing a procedure that is designate [sic] to facilitate a more stable opening process.

In addition, the Exchange hopes that the establishment of a strategy cut-off time will result in market participants submitting orders that would result in price improvement to the option series used to calculate exercise settlement/final settlement values for volatility index derivatives.

B. Self-Regulatory Organization's Statement on Burden on Competition

CBOE does not believe that the proposed rule change will impose any burden on competition not necessary or appropriate in furtherance of the purposes of the Act. Specifically, CBOE believes that the establishment of a strategy-order cut-off time results in all market participants, that hedge volatility index derivative using constituent volatility index options, being treated the same and does not impose any burden on competition.

[15] 15 U.S.C. 78f(b).

[16] 15 U.S.C. 78f(b)(5).

C. Self-Regulatory Organization's Statement on Comments on the Proposed Rule Change Received From Members, Participants or Others

No written comments were solicited or received with respect to the proposed rule change.

III. Date of Effectiveness of the Proposed Rule Change and Timing for Commission Action

Within 45 days of the date of publication of this notice in the **Federal Register** or within such longer period up to 90 days (i) as the Commission may designate if it finds such longer period to be appropriate and publishes its reasons for so finding or (ii) as to which the Exchange consents, the Commission will:

A. By order approve or disapprove such proposed rule change, or

B. institute proceedings to determine whether the proposed rule change should be disapproved.

IV. Solicitation of Comments

Interested persons are invited to submit written data, views, and arguments concerning the foregoing, including whether the proposed rule change is consistent with the Act. Comments may be submitted by any of the following methods:

Electronic Comments

- Use the Commission's Internet comment form (*http://www.sec.gov/rules/sro.shtml*); or
- Send an email to *rule-comments@sec.gov.* Please include File Number SR–CBOE–2013–102 on the subject line.

Paper Comments

- Send paper comments in triplicate to Elizabeth M. Murphy, Secretary, Securities and Exchange Commission, 100 F Street NE., Washington, DC 20549–1090.

All submissions should refer to File Number *SR–CBOE–2013–102.* This file number should be included on the subject line if email is used. To help the Commission process and review your comments more efficiently, please use only one method. The Commission will post all comments on the Commission's Internet Web site (*http://www.sec.gov/rules/sro.shtml*). Copies of the submission, all subsequent amendments, all written statements with respect to the proposed rule change that are filed with the Commission, and all written communications relating to the proposed rule change between the Commission and any person, other than those that may be withheld from the

public in accordance with the provisions of 5 U.S.C. 552, will be available for Web site viewing and printing in the Commission's Public Reference Room, 100 F Street NE., Washington, DC 20549, on official business days between the hours of 10:00 a.m. and 3:00 p.m. Copies of the filing also will be available for inspection and copying at the principal office of the Exchange. All comments received will be posted without change; the Commission does not edit personal identifying information from submissions. You should submit only information that you wish to make available publicly. All submissions should refer to File Number SR–CBOE–2013–102 and should be submitted on or before November 21, 2013.

For the Commission, by the Division of Trading and Markets, pursuant to delegated authority.[17]

Kevin M. O'Neill,

Deputy Secretary.

[FR Doc. 2013–25828 Filed 10–30–13; 8:45 am]

BILLING CODE 8011–01–P

SECURITIES AND EXCHANGE COMMISSION

[Release No. 34–70754; File No. SR–NYSEArca–2013–105]

Self-Regulatory Organizations; NYSE Arca, Inc.; Notice of Filing of Proposed Rule Change To List and Trade Shares of the SPDR MFS Systematic Core Equity ETF, SPDR MFS Systematic Growth Equity ETF, and SPDR MFS Systematic Value Equity ETF Under NYSE Arca Equities Rule 8.600

October 25, 2013.

Pursuant to Section 19(b)(1)[1] of the Securities Exchange Act of 1934 (the ''Act'')[2] and Rule 19b–4 thereunder,[3] notice is hereby given that, on October 10, 2013, NYSE Arca, Inc. (the ''Exchange'' or ''NYSE Arca'') filed with the Securities and Exchange Commission (the ''Commission'') the proposed rule change as described in Items I and II below, which Items have been prepared by the self-regulatory organization. The Commission is publishing this notice to solicit comments on the proposed rule change from interested persons.

I. Self-Regulatory Organization's Statement of the Terms of Substance of the Proposed Rule Change

The Exchange proposes to list and trade shares of the following under NYSE Arca Equities Rule 8.600 (''Managed Fund Shares''): SPDR MFS Systematic Core Equity ETF; SPDR MFS Systematic Growth Equity ETF; and SPDR MFS Systematic Value Equity ETF. The text of the proposed rule change is available on the Exchange's Web site at *www.nyse.com,* at the principal office of the Exchange, and at the Commission's Public Reference Room.

II. Self-Regulatory Organization's Statement of the Purpose of, and Statutory Basis for, the Proposed Rule Change

In its filing with the Commission, the self-regulatory organization included statements concerning the purpose of, and basis for, the proposed rule change and discussed any comments it received on the proposed rule change. The text of those statements may be examined at the places specified in Item IV below. The Exchange has prepared summaries, set forth in sections A, B, and C below, of the most significant parts of such statements.

A. Self-Regulatory Organization's Statement of the Purpose of, and the Statutory Basis for, the Proposed Rule Change

1. Purpose

The Exchange proposes to list and trade shares (''Shares'') of the following under NYSE Arca Equities Rule 8.600, which governs the listing and trading of Managed Fund Shares: SPDR MFS Systematic Core Equity ETF; SPDR MFS Systematic Growth Equity ETF; and SPDR MFS Systematic Value Equity ETF (each a ''Fund'' and, collectively, the ''Funds'').[4] The Shares will be offered by SSgA Active ETF Trust (the ''Trust''), which is organized as a Massachusetts business trust and is registered with the Commission as an open-end management investment company.[5] SSgA Funds Management, Inc. (the ''Adviser'' or ''SSgA FM'') will serve as the investment adviser to the Funds. Massachusetts Financial Services Company (the ''Sub-Adviser'' or ''MFS'') will be the sub-adviser for the Funds.[6] State Street Global Markets, LLC (the ''Distributor'' or ''Principal Underwriter'') will be the principal underwriter and distributor of the Funds' Shares. State Street Bank and Trust Company (the ''Administrator'', ''Custodian'' or ''Transfer Agent'') will serve as administrator, custodian and transfer agent for the Funds.[7]

Commentary .06 to Rule 8.600 provides that, if the investment adviser to the investment company issuing Managed Fund Shares is affiliated with a broker-dealer, such investment adviser shall erect a ''fire wall'' between the investment adviser and the broker-dealer with respect to access to information concerning the composition and/or changes to such investment company portfolio. In addition, Commentary .06 further requires that personnel who make decisions on the open-end fund's portfolio composition must be subject to procedures designed to prevent the use and dissemination of material nonpublic information regarding the open-end fund's portfolio.[8] Commentary .06 to Rule

[17] 17 CFR 200.30–3(a)(12).

[1] 15 U.S.C. 78s(b)(1).

[2] 15 U.S.C. 78a.

[3] 17 CFR 240.19b–4.

[4] A Managed Fund Share is a security that represents an interest in an investment company registered under the Investment Company Act of 1940 (15 U.S.C. 80a–1) (''1940 Act'') organized as an open-end investment company or similar entity that invests in a portfolio of securities selected by its investment adviser consistent with its investment objectives and policies. In contrast, an open-end investment company that issues Investment Company Units, listed and traded on the Exchange under NYSE Arca Equities Rule 5.2(j)(3), seeks to provide investment results that correspond generally to the price and yield performance of a specific foreign or domestic stock index, fixed income securities index or combination thereof.

[5] The Trust is registered under the 1940 Act. On December 21, 2012, the Trust filed with the Commission an amendment to its registration statement on Form N–1A under the Securities Act of 1933 (15 U.S.C. 77a) (''Securities Act''), and under the 1940 Act relating to the Funds (File Nos. 333–173276 and 811–22542) (''Registration Statement''). The description of the operation of the Trust and the Funds herein is based, in part, on the Registration Statement. In addition, the Commission has issued an order granting certain exemptive relief to the Trust under the1940 Act. *See* Investment Company Act Release No. 29524 (December 13, 2010) (File No. 812–13487) (''Exemptive Order'').

[6] MFS is a subsidiary of Sun Life of Canada (U.S.) Financial Services Holdings, Inc., which in turn is an indirect majority owned subsidiary of Sun Life Financial Inc. (a diversified financial services organization).

[7] The Commission has previously approved listing and trading on the Exchange of a number of actively managed funds under Rule 8.600. *See, e.g.,* Securities Exchange Act Release Nos. 57801 (May 8, 2008), 73 FR 27878 (May 14, 2008) (SR–NYSEArca–2008–31) (order approving Exchange listing and trading of twelve actively-managed funds of the WisdomTree Trust); 60460 (August 7, 2009), 74 FR 41468 (August 17, 2009) (SR–NYSEArca–2009–55) (order approving listing of Dent Tactical ETF); 62502 (July 15, 2010), 75 FR 42471 (July 21, 2010) (SR–NYSEArca–2010–57) (order approving listing of AdviserShares WCM/BNY Mellon Focused Growth ADR ETF); 63076 (October 12, 2010), 75 FR 63874 (October 18, 2010) (SR–NYSEArca–2010–79) (order approving listing of Cambria Global Tactical ETF).

[8] An investment adviser to an open-end fund is required to be registered under the Investment Advisers Act of 1940 (the ''Advisers Act''). As a

Continued

8.600 is similar to Commentary .03(a)(i) and (iii) to NYSE Arca Equities Rule 5.2(j)(3); however, Commentary .06 in connection with the establishment of a ''fire wall'' between the investment adviser and the broker-dealer reflects the applicable open-end fund's portfolio, not an underlying benchmark index, as is the case with index-based funds. The Adviser and Sub-Adviser are not registered as broker-dealers but are affiliated with one or more broker-dealers and have implemented a ''fire wall'' with respect to such broker-dealers regarding access to information concerning the composition and/or changes to the Funds' portfolios. In the event (a) the Adviser or Sub-Adviser becomes a registered broker-dealer or becomes newly affiliated with a broker-dealer, or (b) any new adviser or sub-adviser is a registered broker-dealer or becomes affiliated with a broker-dealer, they will implement a fire wall with respect to their relevant personnel or broker-dealer affiliate regarding access to information concerning the composition and/or changes to a portfolio, and will be subject to procedures designed to prevent the use and dissemination of material non-public information regarding such portfolio.

SPDR MFS Systematic Core Equity ETF

According to the Registration Statement, the SPDR MFS Systematic Core Equity ETF's investment objective will be to seek capital appreciation. Under normal circumstances,[9] the Fund will invest substantially all of its assets in the SSgA MFS Systematic Core Equity Portfolio (the ''Core Equity Portfolio''), a separate series of the SSgA Master Trust with an identical investment objective as the Fund. As a result, the Fund will invest indirectly through the Core Equity Portfolio (as described below).[10]

Under normal circumstances, the Adviser or Sub-Adviser, with respect to the Core Equity Portfolio, will invest at least 80% of such Portfolio's net assets (plus the amount of borrowings for investment purposes) in equity securities. Equity securities in which the Portfolio may invest include common stocks, preferred stocks, securities convertible into stocks, and real estate investment trusts (''REITs''). REITs pool investors' funds for investment primarily in income producing real estate or real estate loans or interests.

In selecting securities for the Core Equity Portfolio, MFS will utilize a bottom-up approach to buying and selling investments for the Portfolio. Investments are selected based on fundamental and quantitative analysis. MFS uses fundamental analysis of individual issuers and their potential in light of their financial condition, and market, economic, political, and regulatory conditions to identify potential investments. Factors considered may include analysis of an issuer's earnings, cash flows, competitive position, and management ability. MFS then uses quantitative models that systematically evaluate an issuer's valuation, price and earnings momentum, earnings quality, and other factors to select investments. While the Sub-Adviser may invest the Core Equity Portfolio's assets in companies of any size, the Sub-Adviser generally will focus on companies with large market capitalizations. In selecting investments for the Core Equity Portfolio, the Sub-Adviser is not constrained to any particular investment style. The Sub-Adviser may invest the Core Equity Portfolio's assets in the stocks of companies it believes have above average earnings growth potential compared to other companies (growth companies), in the stocks of companies it believes are undervalued compared to their perceived worth (value companies), or in a combination of growth and value companies.

The Adviser or Sub-Adviser may invest in exchange-traded products (''ETPs'').[11] ETPs include exchange-traded funds registered under the 1940 Act; exchange traded commodity trusts; and exchange traded notes (''ETNs'').[12] The Adviser or Sub-Adviser may invest up to 20% of its total assets in one or more ETPs that are qualified publicly traded partnerships (''QPTPs'') and whose principal activities are the buying and selling of commodities or options, futures, or forwards with respect to commodities. Income from QPTPs is generally qualifying income for purposes of Subchapter M of the Internal Revenue Code.[13]

result, the Adviser and Sub-Adviser and their related personnel are subject to the provisions of Rule 204A–1 under the Advisers Act relating to codes of ethics. This Rule requires investment advisers to adopt a code of ethics that reflects the fiduciary nature of the relationship to clients as well as compliance with other applicable securities laws. Accordingly, procedures designed to prevent the communication and misuse of non-public information by an investment adviser must be consistent with Rule 204A–1 under the Advisers Act. In addition, Rule 206(4)–7 under the Advisers Act makes it unlawful for an investment adviser to provide investment advice to clients unless such investment adviser has (i) adopted and implemented written policies and procedures reasonably designed to prevent violation, by the investment adviser and its supervised persons, of the Advisers Act and the Commission rules adopted thereunder; (ii) implemented, at a minimum, an annual review regarding the adequacy of the policies and procedures established pursuant to subparagraph (i) above and the effectiveness of their implementation; and (iii) designated an individual (who is a supervised person) responsible for administering the policies and procedures adopted under subparagraph (i) above.

[9] The term ''under normal circumstances'' includes, but is not limited to, the absence of extreme volatility or trading halts in the equity markets or the financial markets generally; operational issues causing dissemination of inaccurate market information; or force majeure type events such as systems failure, natural or man-made disaster, act of God, armed conflict, act of terrorism, riot or labor disruption or any similar intervening circumstance. In the absence of normal circumstances, a Fund may (either directly or through the corresponding Portfolio (as described below) temporarily depart from its normal investment policies and strategies provided that the alternative is consistent with a Fund's investment objective and is in the best interest of a Fund. For example, a Fund may hold a higher than normal proportion of its assets in cash in times of extreme market stress.

[10] According to the Registration Statement, the Funds are intended to be managed in a ''master-feeder'' structure, under which each Fund will invest substantially all of its assets in, respectively, the Core Equity Portfolio, and, as described further below, the SSgA MFS Systematic Growth Equity Portfolio or the SSgA MFS Systematic Value Equity Portfolio (each of which is also referred to herein as ''Portfolio'' and, collectively, the ''Portfolios''). Each Portfolio is a ''master fund, which is a separate mutual fund that has an identical investment objective to its respective Portfolio. As a result, each Fund (*i.e.,* a ''feeder fund'') has an indirect interest in all of the securities owned by the corresponding Portfolio.[10] Because of this indirect interest, each Fund's investment returns should be the same as those of the corresponding Portfolio, adjusted for the expenses of a Fund. In extraordinary instances, each Fund reserves the right to make direct investments in securities. Each Fund may discontinue investing through the master-feeder arrangement and pursue its investment objectives directly if the Fund's Board of Trustees determines that doing so would be in the best interests of shareholders.

[11] For each of the Portfolios, ETPs include Investment Company Units (as described in NYSE Arca Equities Rule 5.2(j)(3)); Index-Linked Securities (as described in NYSE Arca Equities Rule 5.2(j)(6)); Portfolio Depositary Receipts (as described in NYSE Arca Equities Rule 8.100); Trust Issued Receipts (as described in NYSE Arca Equities Rule 8.200); Commodity-Based Trust Shares (as described in NYSE Arca Equities Rule 8.201); Currency Trust Shares (as described in NYSE Arca Equities Rule 8.202); Commodity Index Trust Shares (as described in NYSE Arca Equities Rule 8.203); Trust Units (as described in NYSE Arca Equities Rule 8.500); Managed Fund Shares (as described in NYSE Arca Equities Rule 8.600), and closed-end funds. The ETPs all will be listed and traded in the U.S. on registered exchanges. While the Funds may invest in inverse ETPs, the Funds will not invest in leveraged or inverse leveraged ETPs (e.g., 2X or 3X).

[12] ETNs are debt obligations of investment banks which are traded on exchanges and the returns of which are linked to the performance of market indexes. In addition to trading ETNs on exchanges, investors may redeem ETNs directly with the issuer on a weekly basis, typically in a minimum amount of 50,000 units, or hold the ETNs until maturity.

[13] 26 U.S.C. 851 *et seq.* Examples of such entities are the PowerShares DB Energy Fund, PowerShares DB Oil Fund, PowerShares DB Precious Metals Fund, PowerShares DB Gold Fund, PowerShares DB Silver Fund, PowerShares DB Base Metals Fund, and PowerShares DB Agriculture Fund, which are

SPDR MFS Systematic Growth Equity ETF

According to the Registration Statement, the SPDR MFS Systematic Growth Equity ETF's investment objective will be to seek capital appreciation. Under normal circumstances, the Fund will invest substantially all of its assets in the SSgA MFS Systematic Growth Equity Portfolio (the ''Growth Equity Portfolio''), a separate series of the SSgA Master Trust with an identical investment objective as the Fund. As a result, the Fund will invest indirectly through the Growth Equity Portfolio.

Under normal circumstances, the Adviser or Sub-Adviser, with respect to the Growth Equity Portfolio, will invest at least 80% of such Portfolio's net assets (plus the amount of borrowings for investment purposes) in equity securities. Equity securities in which the Growth Equity Portfolio may invest include common stocks, preferred stocks, securities convertible into stocks, and REITs.

In selecting securities for the Growth Equity Portfolio, MFS will utilize a bottom-up approach to buying and selling investments for the Growth Equity Portfolio. Investments are selected based on fundamental and quantitative analysis. MFS uses fundamental analysis of individual issuers and their potential in light of their financial condition, and market, economic, political, and regulatory conditions to identify potential investments. Factors considered may include analysis of an issuer's earnings, cash flows, competitive position, and management ability. MFS then uses quantitative models that systematically evaluate an issuer's valuation, price and earnings momentum, earnings quality, and other factors to select investments. While the Sub-Adviser may invest the Growth Equity Portfolio's assets in companies of any size, the Sub-Adviser generally will focus on companies with large market capitalizations. In selecting investments for the Growth Equity Portfolio, the Sub-Adviser will invest the Growth Equity Portfolio's assets in the stocks of companies it believes have above average earnings growth potential compared to other companies (growth companies).

The Adviser or Sub-Adviser may invest in ETPs.[14] The Adviser or Sub-Adviser may invest up to 20% of the Fund's total assets in one or more ETPs that are QPTPs and whose principal activities are the buying and selling of commodities or options, futures, or forwards with respect to commodities. Income from QPTPs is generally qualifying income for purposes of Subchapter M of the Internal Revenue Code.[15]

SPDR MFS Systematic Value Equity ETF

According to the Registration Statement, the SPDR MFS Systematic Value Equity ETF's investment objective will be to seek capital appreciation. Under normal circumstances, the Fund will invest substantially all of its assets in the SSgA MFS Systematic Value Equity Portfolio (the ''Value Equity Portfolio''), a separate series of the SSgA Master Trust with an identical investment objective as the Fund. As a result, the Fund will invest indirectly through the Value Equity Portfolio.

Under normal circumstances, the Adviser or Sub-Adviser, with respect to the Value Equity Portfolio, will invest at least 80% of such Portfolio's net assets (plus the amount of borrowings for investment purposes) in equity securities. Equity securities in which the Value Equity Portfolio may invest include common stocks, preferred stocks, securities convertible into stocks, and REITs.

In selecting securities for the Value Equity Portfolio, MFS will utilize a bottom-up approach to buying and selling investments for the Value Equity Portfolio. Investments are selected based on fundamental and quantitative analysis. MFS uses fundamental analysis of individual issuers and their potential in light of their financial condition, and market, economic, political, and regulatory conditions to identify potential investments. Factors considered may include analysis of an issuer's earnings, cash flows, competitive position, and management ability. MFS then uses quantitative models that systematically evaluate an issuer's valuation, price and earnings momentum, earnings quality, and other factors to select investments. While the Sub-Adviser may invest the Value Equity Portfolio's assets in companies of any size, the Sub-Adviser generally will focus on companies with large market capitalizations. In selecting investments for the Value Equity Portfolio, the Sub-Adviser will invest the Value Equity Portfolio's assets in the stocks of companies it believes are undervalued compared to their perceived worth (value companies).

The Adviser or Sub-Adviser may invest in ETPs.[16] The Adviser or Sub-Adviser may invest up to 20% of the Fund's total assets in one or more ETPs that are QPTPs and whose principal activities are the buying and selling of commodities or options, futures, or forwards with respect to commodities. Income from QPTPs is generally qualifying income for purposes of Subchapter M of the Internal Revenue Code.[17]

Other Investments

While, under normal circumstances, the Adviser or Sub-Adviser, with respect to each Portfolio, will invest at least 80% of such Portfolio's net assets in equity securities, as described above, the Adviser or Sub-Adviser may invest up to 20% of a Portfolio's net assets in other securities and financial instruments, as described below.

A Fund may (indirectly through its investments in the respective Portfolio or, in extraordinary circumstances, directly) invest in the following types of investments. The investment practices of each Portfolio will be the same in all material respects to those of its respective Fund.

Each Portfolio may invest in bonds, including corporate bonds. The investment return of corporate bonds reflects interest on the bond and changes in the market value of the bond.

Each Portfolio may invest in collateralized loan obligations (''CLOs''). A CLO is a financing company (generally called a Special Purpose Vehicle), created to reapportion the risk and return characteristics of a pool of assets. While the assets underlying CLOs are typically ''senior loans'', the assets may also include (i) unsecured loans, (ii) other debt securities that are rated below investment grade, (iii) debt tranches of other CLOs and (iv) equity securities incidental to investments in senior loans.

Each Portfolio may invest up to 10% of a Portfolio's net assets in high yield debt securities.

The Portfolios may purchase U.S.-listed common stocks and U.S.-listed preferred securities of foreign corporations, as well as U.S. registered, dollar-denominated bonds of foreign corporations, governments, agencies and supra-national entities.

Each Portfolio may purchase investments in common stock of foreign corporations in the form of depositary receipts, including American Depositary Receipts (''ADRs''), Global Depositary Receipts (''GDRs'') and European

listed and traded on the Exchange pursuant to NYSE Arca Equities Rule 8.200.

[14] *See* note 11, *supra*.

[15] *See* note 13, *supra*.

[16] *See* note 11, *supra*.

[17] *See* note 13, *supra*.

Depositary Receipts (''EDRs'') (collectively ''Depositary Receipts'').[18]

Each Portfolio may invest in sovereign debt. Sovereign debt obligations are issued or guaranteed by foreign governments or their agencies. Sovereign debt may be in the form of conventional securities or other types of debt instruments such as loans or loan participations.

Each Portfolio may invest in U.S. Government obligations. U.S. Government obligations include securities issued or guaranteed as to principal and interest by the U.S. Government, its agencies or instrumentalities.

The Portfolios may invest in variable and floating rate securities. Variable rate securities are instruments issued or guaranteed by entities such as (1) U.S. Government, or an agency or instrumentality thereof, (2) corporations, (3) financial institutions, (4) insurance companies, or (5) trusts that have a rate of interest subject to adjustment at regular intervals but less frequently than annually. A variable rate security provides for the automatic establishment of a new interest rate on set dates. The Portfolios may also purchase floating rate securities. A floating rate security provides for the automatic adjustment of its interest rate whenever a specified interest rate changes. Interest rates on these securities are ordinarily tied to, and are a percentage of, a widely recognized interest rate, such as the yield on 90-day U.S. Treasury bills or the prime rate of a specified bank.

Each Portfolio may invest in Variable Rate Demand Obligations (VRDO). VRDOs are short-term tax exempt fixed income instruments whose yield is reset on a periodic basis.[19]

The Portfolios may invest in inflation-protected public obligations, commonly known as ''TIPS,'' of the U.S. Treasury, as well as TIPS of major governments and emerging market countries, excluding the United States. TIPS are a type of security issued by a government that are designed to provide inflation protection to investors. TIPS are income-generating instruments whose interest and principal payments are adjusted for inflation.

The Portfolios may each invest in U.S. agency mortgage pass-through securities. As described in the Registration Statement, the term ''U.S. agency mortgage pass-through security'' refers to a category of pass-through securities backed by pools of mortgages and issued by one of several U.S. Government-sponsored enterprises: Government National Mortgage Association (''Ginnie Mae''), Federal National Mortgage Association (''Fannie Mae'') or Federal Home Loan Mortgage Corporation (''Freddie Mac'').

The Portfolios will seek to obtain exposure to U.S. agency mortgage pass-through securities primarily through the use of ''to-be-announced'' or ''TBA transactions.'' ''TBA'' refers to a commonly used mechanism for the forward settlement of U.S. agency mortgage pass-through securities, and not to a separate type of mortgage-backed security. Most transactions in mortgage pass-through securities occur through the use of TBA transactions. TBA transactions generally are conducted in accordance with widely-accepted guidelines which establish commonly observed terms and conditions for execution, settlement and delivery. In a TBA transaction, the buyer and seller decide on general trade parameters, such as agency, settlement date, par amount, and price.[20]

The Portfolios may invest up to 15% of net assets in asset-backed and commercial mortgaged-backed securities. Asset-backed securities are securities backed by installment contracts, credit-card receivables or other assets. Commercial mortgage-backed securities are securities backed by commercial real estate properties. Both asset-backed and commercial mortgage-backed securities represent interests in ''pools'' of assets in which payments of both interest and principal on the securities are made on a regular basis. The payments are, in effect, ''passed through'' to the holder of the securities (net of any fees paid to the issuer or guarantor of the securities).

Each Portfolio may invest in restricted securities. Restricted securities are securities that are not registered under the Securities Act, but which can be offered and sold to ''qualified institutional buyers'' under Rule 144A under the Securities Act.[21] According to the Registration Statement, when Rule 144A restricted securities present an attractive investment opportunity and meet other selection criteria, a Portfolio may make such investments whether or not such securities are ''illiquid'' depending on the market that exists for the particular security. The Board has delegated the responsibility for determining the liquidity of Rule 144A restricted securities that a Portfolio may invest in to the Adviser.[22]

The Portfolios may conduct foreign currency transactions on a spot (*i.e.,* cash) or forward basis (*i.e.,* by entering into forward contracts to purchase or sell foreign currencies). At the discretion of the Adviser, the Portfolios may enter into forward currency exchange contracts for hedging purposes to help reduce the risks and volatility caused by changes in foreign currency exchange rates, or to gain exposure to certain currencies.

Each Portfolio may invest a portion of its assets in Build America Bonds.[23]

Each Portfolio may invest in repurchase agreements with commercial banks, brokers or dealers to generate income from its excess cash balances and to invest securities lending cash collateral. A repurchase agreement is an

[18] According to the Registration Statement, Depositary Receipts are receipts, typically issued by a bank or trust company, which evidence ownership of underlying securities issued by a foreign corporation. For ADRs, the depository is typically a U.S. financial institution and the underlying securities are issued by a foreign issuer. For other Depositary Receipts, the depository may be a foreign or a U.S. entity, and the underlying securities may have a foreign or a U.S. issuer. Depositary Receipts will not necessarily be denominated in the same currency as their underlying securities. Generally, ADRs, in registered form, are designed for use in the U.S. securities market, and EDRs, in bearer form, are designated for use in European securities markets. GDRs are tradable both in the United States and in Europe and are designed for use throughout the world. A Portfolio may invest in unsponsored ADRs. The issuers of unsponsored ADRs are not obligated to disclose material information in the United States, and, therefore, there may be less information available regarding such issuers and there may not be a correlation between such information and the market value of the Depositary Receipts. Not more than 10% of the net assets of a Fund will be invested in unsponsored ADRs.

[19] According to the Registration Statement, VRDO securities tend to be issued with long maturities of up to 30 or 40 years; however, they are considered short-term instruments because they include a put feature which coincides with the periodic yield reset. For example, a VRDO whose yield resets weekly will have a put feature that is exercisable upon seven days' notice. VRDOs are put back to a bank or other entity that serves as a liquidity provider, who then tries to resell the VRDOs or, if unable to resell, holds them in its own inventory. VRDOs are generally supported by either a ''Letter of Credit'' or a ''Stand-by Bond Purchase Agreement'' to provide credit enhancement.

[20] According to the Registration Statement, to minimize the risk of default by a counterparty, a Portfolio will enter into TBA transactions only with established counterparties (such as major broker-dealers) and the Adviser will monitor the creditworthiness of such counterparties.

[21] 15 U.S.C. 77a.

[22] *See* note 28, *infra.*

[23] According to the Registration Statement, Build America Bonds offer an alternative form of financing to state and local governments whose primary means for accessing the capital markets has historically been through the issuance of tax-free municipal bonds. Issuance of Build America Bonds ceased on December 31, 2010. The Build America Bonds outstanding continue to be eligible for the federal interest rate subsidy, which continues for the life of the Build America Bonds; however, no bonds issued following expiration of the Build America Bond program are eligible for the federal tax subsidy.

agreement under which a fund acquires a financial instrument (*e.g.,* a security issued by the U.S. Government or an agency thereof, a banker's acceptance or a certificate of deposit) from a seller, subject to resale to the seller at an agreed upon price and date (normally, the next Business Day—as defined below). A repurchase agreement may be considered a loan collateralized by securities. The resale price reflects an agreed upon interest rate effective for the period the instrument is held by a fund and is unrelated to the interest rate on the underlying instrument.

Each Portfolio may enter into reverse repurchase agreements, which involve the sale of securities with an agreement to repurchase the securities at an agreed-upon price, date and interest payment and have the characteristics of borrowing. The securities purchased with the funds obtained from the agreement and securities collateralizing the agreement will have maturity dates no later than the repayment date.

Each Portfolio may invest in commercial paper. Commercial paper consists of short-term, promissory notes issued by banks, corporations and other entities to finance short-term credit needs. These securities generally are discounted but sometimes may be interest bearing.

In addition to repurchase agreements, each Portfolio may invest in short-term instruments, including money market instruments, (including money market funds advised by the Adviser), cash and cash equivalents, on an ongoing basis to provide liquidity or for other reasons.[24]

Each Portfolio may invest in the securities of other investment companies, including affiliated funds, money market funds and closed-end funds, subject to applicable limitations under Section 12(d)(1) of the 1940 Act. Each Fund will invest substantially all of its assets in the corresponding Portfolio.

Other Fund Restrictions

According to the Registration Statement, each Portfolio will be classified as ''diversified.'' [25] The Portfolios do not intend to concentrate their investments in any particular industry.[26] The Portfolios intend to qualify for and to elect treatment as a separate regulated investment company (''RIC'') under Subchapter M of the Internal Revenue Code.[27]

Each Portfolio may hold up to an aggregate amount of 15% of its net assets in illiquid securities (calculated at the time of investment), including Rule 144A securities deemed illiquid by the Adviser or Sub-Adviser, consistent with Commission guidance.[28] The Portfolios will monitor their respective portfolio liquidity on an ongoing basis to determine whether, in light of current circumstances, an adequate level of liquidity is being maintained, and will consider taking appropriate steps in order to maintain adequate liquidity if, through a change in values, net assets, or other circumstances, more than 15% of a Fund's net assets are held in illiquid securities. Illiquid securities include securities subject to contractual or other restrictions on resale and other instruments that lack readily available markets as determined in accordance with Commission staff guidance.[29]

Neither the Funds nor the Portfolios will invest in options contracts, futures contracts, or swap agreements.

With the exception of unsponsored ADRs, which will comprise no more than 10% of a Fund's net assets, all equity securities in which the Funds may invest will trade on markets that are members of the Intermarket Surveillance Group (''ISG'') or that have entered into a comprehensive surveillance agreement with the Exchange.[30]

Each Fund's investments will be consistent with its respective investment objective and will not be used to enhance leverage.

Net Asset Value

According to the Registration Statement, each Fund will calculate net asset value (''NAV'') using the NAV of the respective Portfolio. NAV per Share for each Portfolio will be computed by dividing the value of the net assets of the Portfolio (i.e., the value of its total assets less total liabilities) by the total number of Shares outstanding, rounded to the nearest cent. Expenses and fees, including the management fees, will be accrued daily and taken into account for purposes of determining NAV. The NAV of a Portfolio will be calculated by the Custodian and determined at the close of the regular trading session on the New York Stock Exchange (''NYSE'') (ordinarily 4:00 p.m. Eastern time (''E.T.'')) on each day that such exchange is open, provided that fixed-income assets (and, accordingly, a Portfolio's NAV) may be valued as of the announced closing time for trading in fixed-income instruments on any day that the Securities Industry and Financial Markets Association (''SIFMA'') (or applicable exchange or market on which a Portfolio's investments are traded) announces an early closing time. Creation/redemption order cut-off times may also be earlier on such days.

According to the Adviser, each Portfolio's investments will be valued at market value or, in the absence of market value with respect to any investment, at fair value in accordance with valuation procedures adopted by the Board of Trustees of the Trust (''Board'') and in accordance with the 1940 Act. Common stocks and equity

[24] According to the Registration Statement, money market instruments are generally short-term investments that may include but are not limited to: (i) Shares of money market funds (including those advised by the Adviser); (ii) obligations issued or guaranteed by the U.S. Government, its agencies or instrumentalities (including government-sponsored enterprises); (iii) negotiable certificates of deposit (''CDs''), bankers' acceptances, fixed time deposits and other obligations of U.S. and foreign banks (including foreign branches) and similar institutions; (iv) commercial paper rated at the date of purchase ''Prime-1'' by Moody's Investor's Service or ''A–1'' by Standard & Poor's, or if unrated, of comparable quality as determined by the Adviser; (v) non-convertible corporate debt securities (*e.g.,* bonds and debentures) with remaining maturities at the date of purchase of not more than 397 days and that satisfy the rating requirements set forth in Rule 2a-7 under the 1940 Act; and (vi) short-term U.S. dollar-denominated obligations of foreign banks (including U.S. branches) that, in the opinion of the Adviser, are of comparable quality to obligations of U.S. banks which may be purchased by a Portfolio. Commercial paper consists of short-term, promissory notes issued by banks, corporations and other entities to finance short-term credit needs. Any of these instruments may be purchased on a current or a forward-settled basis.

[25] The diversification standard is set forth in Section 5(b)(1) of the 1940 Act (15 U.S.C. 80a–5(b)(1)).

[26] *See* Form N–1A, Item 9. The Commission has taken the position that a fund is concentrated if it invests more than 25% of the value of its total assets in any one industry. *See, e.g.,* Investment Company Act Release No. 9011 (October 30, 1975), 40 FR 54241 (November 21, 1975).

[27] 26 U.S.C. 851 *et seq.*

[28] In reaching liquidity decisions, the Adviser or Sub-Adviser may consider the following factors: The frequency of trades and quotes for the security; the number of dealers wishing to purchase or sell the security and the number of other potential purchasers; dealer undertakings to make a market in the security; and the nature of the security and the nature of the marketplace trades (*e.g.,* the time needed to dispose of the security, the method of soliciting offers, and the mechanics of transfer).

[29] The Commission has stated that long-standing Commission guidelines have required open-end funds to hold no more than 15% of their net assets in illiquid securities and other illiquid assets. *See* Investment Company Act Release No. 28193 (March 11, 2008), 73 FR 14618 (March 18, 2008), footnote 34. *See also,* Investment Company Act Release No. 5847 (October 21, 1969), 35 FR 19989 (December 31, 1970) (Statement Regarding ''Restricted Securities''); Investment Company Act Release No. 18612 (March 12, 1992), 57 FR 9828 (March 20, 1992) (Revisions of Guidelines to Form N–1A). A fund's portfolio security is illiquid if it cannot be disposed of in the ordinary course of business within seven days at approximately the value ascribed to it by the fund. *See* Investment Company Act Release No. 14983 (March 12, 1986), 51 FR 9773 (March 21, 1986) (adopting amendments to Rule 2a–7 under the 1940 Act); Investment Company Act Release No. 17452 (April 23, 1990), 55 FR 17933 (April 30, 1990) (adopting Rule 144A under the 1933 Act).

[30] *See* note 39, *infra.*

securities (including shares of ETFs) traded on a national securities exchange will be valued at the last reported sale price or the official closing price on that exchange where the stock is primarily traded on the day that the valuation is made. Portfolio securities traded in the over-the-counter market will be valued at the last reported sale price on the valuation date. Foreign equities and listed ADRs will be valued at the last sale or official closing price on the relevant exchange on the valuation date. If, however, neither the last sales price nor the official closing price is available, each of these securities will be valued at either the last reported sale price or official closing price as of the close of regular trading of the principal market on which the security is listed consistent with the respective primary benchmark.

According to the Adviser, fixed income securities, including municipal bonds, mortgage-backed securities, treasuries, corporate bonds, and foreign bonds will generally be valued at bid prices received from independent pricing services as of the announced closing time for trading in fixed-income instruments in the respective market or exchange. In determining the value of a fixed income investment, pricing services determine valuations for normal institutional-size trading units of such securities using valuation models or matrix pricing, which incorporates yield and/or price with respect to bonds that are considered comparable in characteristics such as rating, interest rate and maturity date and quotations from securities dealers to determine current value. Short-term investments that mature in less than 60 days when purchased will be valued at cost adjusted for amortization of premiums and accretion of discounts.

Any assets or liabilities denominated in currencies other than the U.S. dollar are converted into U.S. dollars at the current market rates on the date of valuation as quoted by one or more sources.

If a security's market price is not readily available or does not otherwise accurately reflect the fair value of the security, the security will be valued by another method that the Board believes will better reflect fair value in accordance with the Trust's valuation policies and procedures. The Board has delegated the process of valuing securities for which market quotations are not readily available or do not otherwise accurately reflect the fair value of the security to the Pricing and Investment Committee (the ''Committee'').[31] The Committee, subject to oversight by the Board, may use fair value pricing in a variety of circumstances, including but not limited to, situations when trading in a security has been suspended or halted. Accordingly, a Portfolio's net asset value may reflect certain securities' fair values rather than their market prices. Fair value pricing involves subjective judgments and it is possible that the fair value determination for a security is materially different than the value that could be received on the sale of the security.

The pre-established pricing methods and valuation policies and procedures outlined above may change, subject to the review and approval of the Committee and Board, as necessary.

Creation and Redemption of Shares

According to the Registration Statement, each Fund will offer and issue Shares only in aggregations of a specified number of Shares (each, a ''Creation Unit''). Creation Unit sizes will be 50,000 Shares per Creation Unit. The Creation Unit size for a Fund may change. Each Fund will issue and redeem Shares only in Creation Units at the NAV next determined after receipt of an order on a continuous basis on a ''Business Day''. A Business Day with respect to a Fund will be, generally, any day on which the NYSE is open for business. The NAV of a Fund will be determined once each Business Day, normally as of the close of trading on the NYSE (normally, 4:00 p.m. E.T.). An order to purchase or redeem Creation Units will be deemed to be received on the Business Day on which the order is placed provided that the order is placed in proper form prior to the applicable cut-off time (typically required by 2:00 p.m. E.T.).

The consideration for purchase of a Creation Unit of a Fund will generally consist of the in-kind deposit of a designated portfolio of securities (the ''Deposit Securities'') per each Creation Unit and a specified cash payment (the ''Cash Component''). However, consideration may consist of the cash value of the Deposit Securities (''Deposit Cash'') and the Cash Component.

Together, the Deposit Securities or Deposit Cash, as applicable, and the Cash Component will constitute the ''Fund Deposit,'' which represents the minimum initial and subsequent investment amount for a Creation Unit of any Fund. The ''Cash Component'' is an amount equal to the difference between the NAV of the Shares (per Creation Unit) and the market value of the Deposit Securities or Deposit Cash, as applicable. The Cash Component will serve the function of compensating for any differences between the NAV per Creation Unit and the market value of the Deposit Securities or Deposit Cash, as applicable.

The Custodian, through the National Securities Clearing Corporation (''NSCC''), will make available on each Business Day, immediately prior to the opening of business on the Exchange (currently 9:30 a.m. E.T.), the list of the names and the required number of shares of each Deposit Security or the required amount of Deposit Cash, as applicable, to be included in the current Fund Deposit (based on information at the end of the previous Business Day) for a Fund.

The Trust reserves the right to permit or require the substitution of an amount of cash (*i.e.,* a ''cash in lieu'' amount) to be added to the Cash Component to replace any Deposit Security, as described in the Registration Statement.

Shares may be redeemed only in Creation Units at their NAV next determined after receipt of a redemption request in proper form by a Fund through the Transfer Agent and only on a Business Day.

With respect to each Fund, the Custodian, through the NSCC, will make available immediately prior to the opening of business on the Exchange (currently 9:30 a.m. E.T.) on each Business Day, the list of the names and share quantities of each Fund's portfolio securities that will be applicable (subject to possible amendment or correction) to redemption requests received in proper form on that day (''Fund Securities'').

Redemption proceeds for a Creation Unit typically will be paid in-kind; however, such proceeds may be paid in cash or a combination of in-kind and cash, as determined by the Trust. With respect to in-kind redemptions of a Fund, redemption proceeds for a Creation Unit will consist of Fund Securities—as announced by the Custodian on the Business Day of the request for redemption received in proper form plus cash in an amount equal to the difference between the NAV of the Shares being redeemed, as next determined after a receipt of a request in proper form, and the value of the Fund Securities (the ''Cash Redemption Amount''), less a fixed redemption transaction fee and any applicable additional variable charge. All persons redeeming Shares during a Business Day will be treated in the same manner with

[31] The Pricing and Investment Committee has implemented procedures designed to prevent the use and dissemination of material, non-public information regarding the Portfolios and the Funds.

respect to payment of proceeds in-kind, in cash, or in a combination thereof.

The Trust may, in its discretion, exercise its option to redeem Shares in cash, and the redeeming Shareholders will be required to receive its redemption proceeds in cash, as described in the Registration Statement. The investor will receive a cash payment equal to the NAV of its Shares based on the NAV of Shares of the relevant Fund next determined after the redemption request is received in proper form.

Availability of Information

The Funds' Web site (*www.spdrs.com*), which will be publicly available prior to the public offering of Shares, will include a form of the prospectus for the Funds that may be downloaded. The Funds' Web site will include additional quantitative information updated on a daily basis, including, for the Funds, (1) daily trading volume, the prior business day's reported closing price, NAV and mid-point of the bid/ask spread at the time of calculation of such NAV (the ''Bid/Ask Price''),[32] and a calculation of the premium and discount of the Bid/Ask Price against the NAV, and (2) data in chart format displaying the frequency distribution of discounts and premiums of the daily Bid/Ask Price against the NAV, within appropriate ranges, for each of the four previous calendar quarters. On each business day, before commencement of trading in Shares in the Core Trading Session on the Exchange, the Funds will disclose on their Web site the Disclosed Portfolio as defined in NYSE Arca Equities Rule 8.600(c)(2) that will form the basis for the Funds' calculation of NAV at the end of the business day.[33]

On a daily basis, the Adviser will disclose for each portfolio security and other financial instrument of the Funds and of the Portfolios the following information on the Funds' Web site: Ticker symbol (if applicable), name of security and financial instrument, number of shares (if applicable) and dollar value of financial instruments held in the portfolio, and percentage weighting of the security and financial instrument in the portfolio. The Web site information will be publicly available at no charge.

In addition, a basket composition file, which includes the security names and share quantities required to be delivered in exchange for a Fund's Shares, together with estimated and cash component, will be publicly disseminated daily prior to the opening of the NYSE via NSCC. The basket represents one Creation Unit of each Fund.

Investors can also obtain the Trust's Statement of Additional Information (''SAI''), the Funds' Shareholder Reports, and the Trust's Form N–CSR and Form N–SAR, filed twice a year. The Trust's SAI and Shareholder Reports are available free upon request from the Trust, and those documents and the Form N–CSR and Form N–SAR may be viewed on-screen or downloaded from the Commission's Web site at *www.sec.gov.*

Information regarding market price and trading volume of the Shares will be continually available on a real-time basis throughout the day on brokers' computer screens and other electronic services. Information regarding the previous day's closing price and trading volume information for the Shares will be published daily in the financial section of newspapers. Quotation and last sale information for the Shares will be available via the Consolidated Tape Association (''CTA'') high-speed line and, for the ETPs, will be available from the national securities exchange on which they are listed.

Every fifteen seconds during NYSE Arca Core Trading Session, an indicative optimized portfolio value (''IOPV'') relating to each Fund will be disseminated by one or more major market data vendors.[34] The IOPV is the Portfolio Indicative Value as defined in NYSE Arca Equities Rule 8.600(c)(3).[35] The IOPV is based on a pro-rata slice of a Portfolio's holdings, all of which will be included in each respective IOPV. The dissemination of the Portfolio Indicative Value, together with the Disclosed Portfolio, will allow investors to determine the value of the underlying portfolio of the Funds and of the Portfolios on a daily basis and to provide a close estimate of that value throughout the trading day. The intra-day, closing and settlement prices of the Portfolio securities are also readily available from the exchanges trading such securities, automated quotation systems, published or other public sources, or on-line information services such as Bloomberg or Reuters.

Additional information regarding the Trust and the Shares, including investment strategies, risks, creation and redemption procedures, fees, portfolio holdings disclosure policies, distributions and taxes is included in the Registration Statement. All terms relating to the Funds that are referred to, but not defined in, this proposed rule change are defined in the Registration Statement.

Trading Halts

With respect to trading halts, the Exchange may consider all relevant factors in exercising its discretion to halt or suspend trading in the Shares of the Funds.[36] Trading in Shares of the Funds will be halted if the circuit breaker parameters in NYSE Arca Equities Rule 7.12 have been reached. Trading also may be halted because of market conditions or for reasons that, in the view of the Exchange, make trading in the Shares inadvisable. These may include: (1) The extent to which trading is not occurring in the securities and/or the financial instruments comprising the Disclosed Portfolio of the Funds; or (2) whether other unusual conditions or circumstances detrimental to the maintenance of a fair and orderly market are present. Trading in the Shares will be subject to NYSE Arca Equities Rule 8.600(d)(2)(D), which sets forth circumstances under which Shares of a Fund may be halted.

Trading Rules

The Exchange deems the Shares to be equity securities, thus rendering trading in the Shares subject to the Exchange's existing rules governing the trading of equity securities. Shares will trade on the NYSE Arca Marketplace from 4:00 a.m. to 8:00 p.m. E.T. in accordance with NYSE Arca Equities Rule 7.34 (Opening, Core, and Late Trading Sessions). The Exchange has appropriate rules to facilitate transactions in the Shares during all trading sessions. As provided in NYSE Arca Equities Rule 7.6, Commentary .03, the minimum price variation (''MPV'') for quoting and entry of orders in equity

[32] The Bid/Ask Price of the Funds will be determined using the mid-point of the highest bid and the lowest offer on the Exchange as of the time of calculation of the Funds' NAV. The records relating to Bid/Ask Prices will be retained by the Funds and their service providers.

[33] Under accounting procedures followed by the Funds, trades made on the prior business day (''T'') will be booked and reflected in NAV on the current business day (''T+1''). Accordingly, the Funds will be able to disclose at the beginning of the business day the portfolio that will form the basis for the NAV calculation at the end of the business day.

[34] The IOPV calculations are estimates of the value of the Funds' NAV per Share using market data converted into U.S. dollars at the current currency rates. The IOPV price is based on quotes and closing prices from the securities' local market and may not reflect events that occur subsequent to the local market's close. Premiums and discounts between the IOPV and the market price may occur. This should not be viewed as a ''real-time'' update of the NAV per Share of the Funds, which is calculated only once a day.

[35] Currently, it is the Exchange's understanding that several major market data vendors display and/or make widely available IOPVs taken from CTA or other data feeds.

[36] *See* NYSE Arca Equities Rule 7.12.

securities traded on the NYSE Arca Marketplace is $0.01, with the exception of securities that are priced less than $1.00 for which the MPV for order entry is $0.0001.

The Shares of each Fund will conform to the initial and continued listing criteria under NYSE Arca Equities Rule 8.600. The Exchange represents that, for initial and/or continued listing, the Funds will be in compliance with Rule 10A–3 [37] under the Act, as provided by NYSE Arca Equities Rule 5.3. A minimum of 100,000 Shares for each Fund will be outstanding at the commencement of trading on the Exchange. The Exchange will obtain a representation from the issuer of the Shares that the NAV per Share will be calculated daily and that the NAV and the Disclosed Portfolio will be made available to all market participants at the same time.

Surveillance

The Exchange represents that trading in the Shares will be subject to the existing trading surveillances, administered by the Financial Industry Regulatory Authority (''FINRA'') on behalf of the Exchange, which are designed to detect violations of Exchange rules and applicable federal securities laws.[38] The Exchange represents that these procedures are adequate to properly monitor Exchange trading of the Shares in all trading sessions and to deter and detect violations of Exchange rules and applicable federal securities laws.

The surveillances referred to above generally focus on detecting securities trading outside their normal patterns, which could be indicative of manipulative or other violative activity. When such situations are detected, surveillance analysis follows and investigations are opened, where appropriate, to review the behavior of all relevant parties for all relevant trading violations.

FINRA, on behalf of the Exchange, will communicate as needed regarding trading in the Shares and exchange-traded securities underlying the Shares with other markets and other entities that are members of the ISG, and FINRA, on behalf of the Exchange, may obtain trading information regarding trading in the Shares and exchange-traded securities underlying the Shares from such markets and other entities. In addition, the Exchange may obtain information regarding trading in the Shares and exchange-traded securities underlying the Shares from markets and other entities that are members of ISG or with which the Exchange has in place a comprehensive surveillance sharing agreement.[39]

With the exception of unsponsored ADRs, which will comprise no more than 10% of a Fund's net assets, all equity securities that the Fund may invest in will trade on markets that are members of ISG or that have entered into a comprehensive surveillance agreement with the Exchange.

In addition, the Exchange also has a general policy prohibiting the distribution of material, non-public information by its employees.

Information Bulletin

Prior to the commencement of trading, the Exchange will inform its Equity Trading Permit (''ETP'') Holders in an Information Bulletin (''Bulletin'') of the special characteristics and risks associated with trading the Shares. Specifically, the Bulletin will discuss the following: (1) The procedures for purchases and redemptions of Shares in Creation Units (and that Shares are not individually redeemable); (2) NYSE Arca Equities Rule 9.2(a), which imposes a duty of due diligence on its ETP Holders to learn the essential facts relating to every customer prior to trading the Shares; (3) the risks involved in trading the Shares during the Opening and Late Trading Sessions when an updated Portfolio Indicative Value will not be calculated or publicly disseminated; (4) how information regarding the Portfolio Indicative Value is disseminated; (5) the requirement that ETP Holders deliver a prospectus to investors purchasing newly issued Shares prior to or concurrently with the confirmation of a transaction; and (6) trading information.

In addition, the Bulletin will reference that the Funds are subject to various fees and expenses described in the Registration Statement. The Bulletin will discuss any exemptive, no-action, and interpretive relief granted by the Commission from any rules under the Act. The Bulletin will also disclose that the NAV for the Shares will be calculated after 4:00 p.m. E.T. each trading day.

2. Statutory Basis

The basis under the Act for this proposed rule change is the requirement under Section 6(b)(5) [40] that an exchange have rules that are designed to prevent fraudulent and manipulative acts and practices, to promote just and equitable principles of trade, to remove impediments to, and perfect the mechanism of a free and open market and, in general, to protect investors and the public interest.

The Exchange believes that the proposed rule change is designed to prevent fraudulent and manipulative acts and practices in that the Shares will be listed and traded on the Exchange pursuant to the initial and continued listing criteria in NYSE Arca Equities Rule 8.600. The Exchange has in place surveillance procedures that are adequate to properly monitor trading in the Shares in all trading sessions and to deter and detect violations of Exchange rules and applicable federal securities laws. The Adviser and Sub-Adviser have implemented a ''fire wall'' with respect to its respective affiliated broker-dealer regarding access to information concerning the composition and/or changes to the Funds' portfolios. In addition, the Trust's Pricing and Investment Committee has implemented procedures designed to prevent the use and dissemination of material, non-public information regarding the Portfolios and the Funds. FINRA, on behalf of the Exchange, will communicate as needed regarding trading in the Shares and exchange-traded securities underlying the Shares with other markets and other entities that are members of the ISG, and FINRA, on behalf of the Exchange, may obtain trading information regarding trading in the Shares and exchange-traded securities underlying the Shares from such markets and other entities. In addition, the Exchange may obtain information regarding trading in the Shares and exchange-traded securities underlying the Shares from markets and other entities that are members of ISG or with which the Exchange has in place a comprehensive surveillance sharing agreement. With the exception of unsponsored ADRs, which will comprise no more than 10% of the Fund's net assets, all equity securities that the Fund may invest in will trade on markets that are members of ISG or that have entered into a comprehensive surveillance agreement with the Exchange. The Portfolios may invest up to 15% of net assets in asset-backed and commercial mortgaged-backed securities, as described above. The Portfolios will invest only in equity securities that trade in markets that are members of the ISG or are parties to a

[37] 17 CFR 240.10A–3.

[38] FINRA surveils trading on the Exchange pursuant to a regulatory services agreement. The Exchange is responsible for FINRA's performance under this regulatory services agreement.

[39] For a list of the current members of ISG, *see www.isgportal.org.* The Exchange notes that not all components of the Disclosed Portfolio for the Funds may trade on markets that are members of ISG or with which the Exchange has in place a comprehensive surveillance sharing agreement.

[40] 15 U.S.C. 78f(b)(5).

comprehensive surveillance sharing agreement with the Exchange. While the Funds may invest in inverse ETPs, the Funds will not invest in leveraged or inverse leveraged ETPs (*e.g.,* 2X or 3X). Neither the Funds nor the Portfolios will invest in options contracts, futures contracts, or swap agreements.

The proposed rule change is designed to promote just and equitable principles of trade and to protect investors and the public interest in that the Exchange will obtain a representation from the issuer of the Shares that the NAV per Share will be calculated daily and that the NAV and the Disclosed Portfolio will be made available to all market participants at the same time. In addition, a large amount of information is publicly available regarding the Funds and the Shares, thereby promoting market transparency. The Funds' portfolio holdings will be disclosed on their Web site daily after the close of trading on the Exchange and prior to the opening of trading on the Exchange the following day. Moreover, the IOPV will be widely disseminated by one or more major market data vendors at least every 15 seconds during the Exchange's Core Trading Session. On each business day, before commencement of trading in Shares in the Core Trading Session on the Exchange, the Funds will disclose on their Web site the Disclosed Portfolio that will form the basis for the Funds' calculation of NAV at the end of the business day. Information regarding market price and trading volume of the Shares will be continually available on a real-time basis throughout the day on brokers' computer screens and other electronic services, and quotation and last sale information will be available via the CTA high-speed line. The Web site for the Funds will include a form of the prospectus for the Funds and additional data relating to NAV and other applicable quantitative information. Moreover, prior to the commencement of trading, the Exchange will inform its ETP Holders in an Information Bulletin of the special characteristics and risks associated with trading the Shares. Trading in Shares of the Funds will be halted if the circuit breaker parameters in NYSE Arca Equities Rule 7.12 have been reached or because of market conditions or for reasons that, in the view of the Exchange, make trading in the Shares inadvisable, and trading in the Shares will be subject to NYSE Arca Equities Rule 8.600(d)(2)(D), which sets forth circumstances under which Shares of the Funds may be halted. In addition, as noted above, investors will have ready access to information regarding the Funds' holdings, the IOPV, the Disclosed Portfolio, and quotation and last sale information for the Shares.

The proposed rule change is designed to perfect the mechanism of a free and open market and, in general, to protect investors and the public interest in that it will facilitate the listing and trading of additional types of actively-managed exchange-traded products that will enhance competition among market participants, to the benefit of investors and the marketplace. As noted above, the Exchange has in place surveillance procedures relating to trading in the Shares and may obtain information via ISG from other exchanges that are members of ISG or with which the Exchange has entered into a comprehensive surveillance sharing agreement. In addition, as noted above, investors will have ready access to information regarding the Funds' holdings, the IOPV, the Disclosed Portfolio, and quotation and last sale information for the Shares.

B. Self-Regulatory Organization's Statement on Burden on Competition

The Exchange does not believe that the proposed rule change will impose any burden on competition that is not necessary or appropriate in furtherance of the purpose of the Act. The Exchange notes that the proposed rule change will facilitate the listing and trading of additional types of actively-managed exchange-traded products that, under normal circumstances, will invest principally in equity securities and that will enhance competition with respect to such products among market participants, to the benefit of investors and the marketplace.

C. Self-Regulatory Organization's Statement on Comments on the Proposed Rule Change Received From Members, Participants, or Others

No written comments were solicited or received with respect to the proposed rule change.

III. Date of Effectiveness of the Proposed Rule Change and Timing for Commission Action

Within 45 days of the date of publication of this notice in the **Federal Register** or within such longer period up to 90 days (i) as the Commission may designate if it finds such longer period to be appropriate and publishes its reasons for so finding or (ii) as to which the self-regulatory organization consents, the Commission will:

(A) By order approve or disapprove the proposed rule change, or

(B) institute proceedings to determine whether the proposed rule change should be disapproved.

IV. Solicitation of Comments

Interested persons are invited to submit written data, views, and arguments concerning the foregoing, including whether the proposed rule change is consistent with the Act. Comments may be submitted by any of the following methods:

Electronic Comments

- Use the Commission's Internet comment form (*http://www.sec.gov/rules/sro.shtml*); or
- Send an email to *rule-comments@sec.gov.* Please include File No. SR–NYSEARCA–2013–105 on the subject line.

Paper Comments

- Send paper comments in triplicate to Elizabeth M. Murphy, Secretary, Securities and Exchange Commission, 100 F Street NE., Washington, DC 20549–1090.

All submissions should refer to File No. SR–NYSEARCA–2013–105. This file number should be included on the subject line if email is used. To help the Commission process and review your comments more efficiently, please use only one method. The Commission will post all comments on the Commission's Web site (*http://www.sec.gov/rules/sro.shtml*). Copies of the submission, all subsequent amendments, all written statements with respect to the proposed rule change that are filed with the Commission, and all written communications relating to the proposed rule change between the Commission and any person, other than those that may be withheld from the public in accordance with the provisions of 5 U.S.C. 552, will be available for Web site viewing and printing in the Commission's Public Reference Room, 100 F Street NE., Washington, DC 20549, on official business days between the hours of 10:00 a.m. and 3:00 p.m. Copies of such filing also will be available for inspection and copying at the principal office of the Exchange. All comments received will be posted without change; the Commission does not edit personal identifying information from submissions. You should submit only information that you wish to make available publicly. All submissions should refer to File No. SR–NYSEArca–2013–105 and should be submitted on or before November 21, 2013.

For the Commission, by the Division of Trading and Markets, pursuant to delegated authority.[41]

Kevin M. O'Neill,

Deputy Secretary.

[FR Doc. 2013–25827 Filed 10–30–13; 8:45 am]

BILLING CODE 8011–01–P

SMALL BUSINESS ADMINISTRATION

Military Reservist Economic Injury Disaster Loans Interest Rate for First Quarter FY 2014

In accordance with the Code of Federal Regulations 13—Business Credit and Assistance § 123.512, the following interest rate is effective for Military Reservist Economic Injury Disaster Loans approved on or after October 18, 2013.

Military Reservist Loan Program: 4.000%

Dated: October 21, 2013.

James E. Rivera,

Associate Administrator for Disaster Assistance.

[FR Doc. 2013–25455 Filed 10–30–13; 8:45 am]

BILLING CODE P

TENNESSEE VALLEY AUTHORITY

Supplemental Environmental Impact Statement—Integrated Resource Plan

AGENCY: Tennessee Valley Authority.

ACTION: Notice of Intent.

SUMMARY: The Tennessee Valley Authority (TVA) is conducting a study of its energy resources in order to update and replace the integrated Resource Plan (IRP) and the associated Environmental Impact Statement (EIS) that it completed in 2011. The IRP is a comprehensive study of how TVA will meet the demand for electricity in its service territory over the next 20 years. The 2011 IRP is being updated in response to major changes in electrical utility industry trends since 2011. As part of the study, TVA intends to prepare a programmatic Supplemental EIS to assess the impacts associated with the implementation of the updated IRP. TVA will use the EIS process to elicit and prioritize the values and concerns of stakeholders; identify issues, trends, events, and tradeoffs affecting TVA's policies; formulate, evaluate and compare alternative portfolios of energy resource options; provide opportunities for public review and comment; and ensure that TVA's evaluation of alternative energy resource strategies reflects a full range of stakeholder input. Public comment is invited concerning both the scope of the Supplemental EIS and environmental issues that should be addressed as a part of this Supplemental EIS.

DATES: Comments on the scope of the EIS must be received on or before November 22, 2013. To facilitate the scoping process, TVA will hold public scoping meetings; see *http://www.tva.gov/irp* for more information on the meetings.

ADDRESSES: Written comments should be sent to Charles P. Nicholson, Tennessee Valley Authority, 400 West Summit Hill Drive, WT 11D, Knoxville, Tennessee 37902. Comments also may be submitted on the project Web site at *http://www.tva.gov/irp,* or by email at *IRP@tva.gov.*

FOR FURTHER INFORMATION CONTACT: For general information on the NEPA process, contact Mr. Nicholson at the address above, by email at *cpnicholson@tva.gov,* or by phone at 865–632–3582. For general information on the IRP process, contact Gary Brinkworth, Tennessee Valley Authority, 1101 Market Street, MR 3K–C, Chattanooga, Tennessee 37401, or email at *gsbrinkworth@tva.gov.*

SUPPLEMENTARY INFORMATION: This notice is provided in accordance with the Council on Environmental Quality's Regulations (40 CFR parts 1500 to 1508) and TVA's procedures for implementing the National Environmental Policy Act (NEPA).

TVA is an agency and instrumentality of the United States, established by an act of Congress in 1933, to foster the social and economic welfare of the people of the Tennessee Valley region and to promote the proper use and conservation of the region's natural resources. One component of this mission is the generation, transmission, and sale of reliable and affordable electric energy.

TVA Power System

TVA operates the nation's largest public power system, producing 4 percent of all the electricity in the nation. TVA provides electricity to most of Tennessee and parts of Virginia, North Carolina, Georgia, Alabama, Mississippi, and Kentucky. It serves about 9 million people in this seven-state region through 155 power distributors and 57 directly served large industries and federal facilities. The TVA Act requires the TVA power system to be self-supporting and operated on a nonprofit basis and directs TVA to sell power at rates as low as are feasible.

Dependable net summer capacity on the TVA power system is approximately 36,580 megawatts. TVA generates most of the power it distributes with 3 nuclear plants, 10 coal-fired plants, 9 simple-cycle combustion turbine plants, 5 combined-cycle combustion turbine plants, 29 hydroelectric dams, a pumped-storage facility, a methane-gas cofiring facility, a diesel-fired facility, and several small solar photovoltaic facilities. A portion of delivered power is provided through long-term power purchase agreements. About 41 percent of TVA's recent annual generation is from coal; 38 percent is from nuclear; 12 percent from natural gas; and the remainder is from hydro and other renewable energy resources. TVA transmits electricity from these facilities over 16,000 circuit miles of transmission lines. Like other utility systems, TVA has power interchange agreements with utilities surrounding its region and purchases and sells power on an economy basis almost daily.

Resource Planning Activities

In April 2011, TVA completed the *Integrated Resource Plan—TVA's Environmental and Energy Future* and associated Final EIS. These documents, developed with extensive public involvement, evaluated six alternative energy resource strategies which differed in the amount of purchased power, energy efficiency and demand response efforts, renewable energy resources, nuclear generating capacity additions, and coal-fired generation. The alternative strategies were analyzed in the context of eight different scenarios which described plausible future economic, financial, regulatory and legislated conditions, as well as social trends and adoption of technological innovations. Potential 20-year energy resource plans or portfolios were developed for each combination of strategy and scenario using a capacity planning model. The portfolios were ranked by several metrics including revenue requirements, short-term system average rates, financial risk, carbon dioxide emissions, thermal cooling requirements, waste handling costs, and changes in total employment and personal income. The strategy selected to guide planning activities, Strategy R—Recommended Planning Direction, consisted of a range of additions by resource type that reflected an optimized mix of diversified energy resources that would be added to the TVA power system under a variety of plausible futures. This strategy will be the baseline for the evaluations conducted as part of this new IRP and EIS process.

[41] 17 CFR 200.30–3(a)(12).

The major components of the implemented 2011 IRP strategy included 3,600 to 5,100 MW of energy efficiency and demand response by 2020; 1,500 to 2,500 MW of cost effective renewable energy additions by 2020; idling of 2,400 to 4,700 MW of coal capacity by 2017; 850 MW of new pumped storage capacity in 2020–2024; 1,150 to 5,900 MW of new nuclear capacity in 2013–2029; and 900 to 9,300 MW of new natural gas capacity in 2012–2029.

Since 2011, several dramatic changes, both industry-wide and TVA-specific, have led TVA to begin development of the new IRP and associated Supplemental EIS ahead of the 5-year cycle identified in the 2011 IRP. Natural gas supplies have become abundant and available at lower cost. Electricity demand growth has been lower than forecast and, for TVA, has decreased since 2011. Additional TVA-specific changes to underlying assumptions used in the 2011 IRP study include: The delay in the startup of the first nuclear capacity addition, Watts Bar Unit 2, from 2013 to 2015; the delay of the startup of the next nuclear addition, Bellefonte Unit 1, beyond the early date of 2018; and the postponement of planning studies for new pumped storage capacity, with eventual startup delayed beyond the 2020 early date.

Proposed Issues To Be Addressed

Based on both internal and external stakeholder discussions, TVA anticipates that the major issues to be addressed in the IRP Supplemental EIS will be the cost and reliability of power, the effects of power production on the environment, including climate change, the effects of climate change on the Valley, the availability and use of renewable power resources, the effectiveness and implementation of demand side management options, including energy efficiency, handling waste and byproducts of TVA's power operations, and the relationship of the economy to all of these activities. Generic resource options will be the primary focus of the Supplemental EIS. TVA also anticipates a more robust evaluation of electrical transmission system additions and upgrades necessary to transmit power from TVA generating facilities and from facilities outside the TVA region.

Because of the programmatic nature of this study, TVA anticipates that the environmental effects which are examined will primarily be those at a regional level with some extending to a national or global level. This would include such potential environmental effects and issues as emissions of greenhouse gases, air quality, water quality and quantity, waste generation and disposal, and ecological and cultural resources. Socioeconomic impacts within the region that may result from alternative energy strategies will also be considered. The more site-specific effects will not be addressed in detail and would be addressed in later tiered assessments of specific implementing activities.

This list of issues is preliminary and is intended to facilitate public comment on the scope of this Supplemental EIS. TVA invites suggestions concerning the list of issues which should be addressed. TVA also invites specific comments on the questions that will begin to be answered by IRP:

- Should the current power generation mix (e.g., coal, nuclear power, natural gas, hydro, renewables) change? If so, how?
- Should renewable power be available and added in the Valley at a significant scale? If so, how?
- How should energy efficiency and demand response be considered in planning for future energy needs and how can TVA directly affect electricity usage by consumers?
- And how will all of this affect reliability and the price we pay for electricity?

Analytical Approach

TVA anticipates using an analytical approach similar to that of the 2011 IRP/EIS described above. The number of alternative energy resource strategies and scenarios to be evaluated may differ from the 2011 IRP/EIS and will be determined after the completion of scoping. The IRP planning period is 20 years.

Scoping Process

Scoping, which is integral to the process for implementing NEPA, provides an early and open process to ensure that (1) issues are identified early and properly studied; (2) issues of little significance do not consume substantial time and effort; (3) the draft EIS is thorough and balanced; and (4) delays caused by an inadequate EIS are avoided.

With the help of the public, TVA will identify the most effective energy resource strategy that will meet TVA's mission and serve the people of the Valley for the next 20 years. To ensure that the full range of issues and a comprehensive portfolio of energy resources are addressed, TVA invites members of the public as well as federal, state, and local agencies and Indian tribes to comment on the scope of the IRP EIS. As part of the EIS process, TVA anticipates asking representatives from key stakeholder groups to participate in a public review group which will meet several times over the course of the study to learn about the issues, discuss tradeoffs associated with different resource options, and assist TVA in developing an optimal energy resource strategy.

Comments on the scope of this Supplemental EIS should be submitted no later than the date given under the **DATES** section of this notice. Any comments received, including names and addresses, will become part of the administrative record and will be available for public inspection.

After consideration of the comments received during this scoping period, TVA will develop and distribute a document which will summarize public and agency comments that were received and identify the issues and alternatives to be addressed in the Supplemental EIS and identify the schedule for completing the EIS process. Following analysis of the issues, TVA will prepare a draft EIS for public review and comment. Notice of availability of the draft EIS will be published by the U.S. Environmental Protection Agency in the **Federal Register**. TVA will solicit comments on the draft IRP and Supplemental EIS and hold public meetings to address it. TVA expects to release the draft IRP and Supplemental EIS in late 2014. The final IRP and Supplemental EIS, along with the Record of Decision, will be issued in 2015.

Dated: October 23, 2013.

Brenda E. Brickhouse,

Vice President, Environment.

[FR Doc. 2013–25867 Filed 10–30–13; 8:45 am]

BILLING CODE 8120–01–P

DEPARTMENT OF TRANSPORTATION

Federal Aviation Administration

Notice of Request To Release Airport Property

AGENCY: Federal Aviation Administration (FAA), DOT.

ACTION: Notice of Intent to Rule on Request to Release Airport Property at the Kearney Regional Airport (EAR), Kearney, Nebraska.

SUMMARY: The FAA proposes to rule and invites public comment on the release of land at the Kearney Regional Airport, Kearney, Nebraska, under the provisions of 49 U.S.C. 47107(h)(2).

DATES: Comments must be received on or before December 2, 2013.

ADDRESSES: Comments on this application may be mailed or delivered to the FAA at the following address: Lynn D. Martin, Airports Compliance Specialist, Federal Aviation Administration, Airports Division, ACE–610C, 901 Locust Room 364, Kansas City, MO 64106.

In addition, one copy of any comments submitted to the FAA must be mailed or delivered to: Michael Tye, City Attorney, 1419 Central Avenue, P.O. Box 636, Kearney, NE 68848–0636, (308) 237–3155.

FOR FURTHER INFORMATION CONTACT: Lynn D. Martin, Airports Compliance Specialist, Federal Aviation Administration, Airports Division, ACE–610C, 901 Locust Room 364, Kansas City, MO 64106, (816) 329–2644, *lynn.martin@faa.gov.*

The request to release property may be reviewed, by appointment, in person at this same location.

SUPPLEMENTARY INFORMATION: The FAA invites public comment on the request to release approximately 67.72± acres of airport property at the Kearney Regional Airport (EAR) under the provisions of 49 U.S.C. 47107(h)(2). On July 1, 2013, the City Attorney at the Kearney Regional Airport requested from the FAA that approximately 67.72± acres of property be released for sale to the City of Kearney for them to transfer to the Veteran's Administration for construction of the Central Nebraska Veteran's Home. On September 29, 2013, the FAA determined that the request to release property at the Kearney Regional Airport (EAR) submitted by the Sponsor meets the procedural requirements of the Federal Aviation Administration and the release of the property does not and will not impact future aviation needs at the airport. The FAA may approve the request, in whole or in part, no sooner than thirty days after the publication of this notice.

The following is a brief overview of the request:

The Kearney Regional Airport (EAR) is proposing the release of airport property totaling 67.72 acres, more or less. This land is to be used for construction of a new Central Nebraska Veteran's Home. The release of land is necessary to comply with Federal Aviation Administration Grant Assurances that do not allow federally acquired airport property to be used for non-aviation purposes. The sale of the subject property will result in the land at the Kearney Regional Airport (EAR) being changed from aeronautical to non-aeronautical use and release the lands from the conditions of the Airport Improvement Program Grant Agreement Grant Assurances. In accordance with 49 U.S.C. 47107(c)(2)(B)(i) and (iii), the airport will receive fair market value for the property, which will be subsequently reinvested in another eligible airport improvement project for general aviation facilities at the Kearney Regional Airport.

Any person may inspect, by appointment, the request in person at the FAA office listed above under **FOR FURTHER INFORMATION CONTACT**. In addition, any person may, upon appointment and request, inspect the application, notice and other documents determined by the FAA to be related to the application in person at the Kearney Regional Airport.

Issued in Kansas City, MO, on October 2, 2013.

Jim A. Johnson,

Manager, Airports Division.

[FR Doc. 2013–25852 Filed 10–30–13; 8:45 am]

BILLING CODE 4910–13–P

DEPARTMENT OF TRANSPORTATION

Federal Aviation Administration

Order 1050.1F Environmental Impacts: Policies and Procedures

AGENCY: Federal Aviation Administration (FAA), DOT.

ACTION: Notice requesting comment on proposed Order 1050.1F Environmental Impacts: Policies and Procedures; Re-Opening of Comment Period.

SUMMARY: This action re-opens the comment period for the notice of draft Order 1050.1F, Environmental Impacts: Policies and Procedures that was published on August 14, 2013. Airports Council International—North America (ACI–NA), which represents local, regional and state governing bodies that own and operate commercial airports across the United States, requested that the FAA extend the comment period for 14 days.

DATES: The notice of the comment period for the Order was published on August 14, 2013 (78 FR 49596), closed September 30, 2013, and is re-opened until November 8, 2013.

ADDRESSES: You may send comments identified by Docket No. FAA–2013–0685 using any of the following methods:

Federal eRulemaking Docket: Go to *http://www.regulations.gov.* Follow the online instructions for sending your comments electronically.

Facsimile: Fax comments to the docket operations personnel at 202–493–2251.

Mail: Send comments to the U.S. Department of Transportation, Docket Operations, M–30, West Building Ground Floor, Room W12–140, 1200 New Jersey Avenue SE., Washington, DC 20590–0001.

Hand Deliver: Deliver comments to the Docket Operations Room on the ground floor of the West Building at U.S. Department of Transportation, Docket Operations, M–30, West Building Ground Floor, Room W12–140, 1200 New Jersey Avenue SE., Washington, DC, between 9:00 a.m. and 5:00 p.m., Monday through Friday, except Federal holidays.

Privacy: We will post all comments we receive, without change, to *http://www.regulations.gov,* including any personal information the commenter provides. Using the search function of the docket Web site, anyone can find and read the electronic form of all comments received into any FAA docket, including the name of the individual sending the comment (or signing the comment for an association, business, labor union, etc.). DOT's complete Privacy Act Statement can be found in the **Federal Register** published on April 11, 2000 (65 FR 19477), as well as at *http://DocketsInfo.dot.gov.*

Docket: You may examine the docket, including comments received, on the Internet at *http://www.regulations.gov* or in person at the U.S. Department of Transportation Docket Operations office between 9:00 a.m. and 5:00 p.m., Monday through Friday, except Federal holidays, at U.S. Department of Transportation, Docket Operations, M–30, West Building Ground Floor, Room W12–140, 1200 New Jersey Avenue SE., Washington, DC.

FOR FURTHER INFORMATION CONTACT: Donald Scata, Office of Environment and Energy (AEE–400), Federal Aviation Administration, 800 Independence Avenue SW., Washington, DC 20591; telephone (202) 267–9890; email *donald.scata@faa.gov.*

Background: On August 14, 2013, the FAA issued a Notice requesting comment on proposed Order 1050.1F, Environmental Impacts: Policies and Procedures. In that notice, the FAA sought comment on proposed revisions to Order 1050.1E, which contains policies and procedures for implementing the National Environmental Policy Act (78 FR 49596). The draft revised order, re-numbered as Order 1050.1F, is available at *http://www.faa.gov/about/office_org/headquarters_offices/apl/environ_policy_guidance/policy/.* The notice stated that comments to that document were to be received on or before September 30, 2013.

By letter dated September 16, 2013, Airports Council International—North America (ACI–NA), which represents local, regional and state governing bodies that own and operate commercial airports across the United States, requested that the FAA extend the comment period for 14 days. ACI–NA noted that the comment period occurs during an extremely busy time for airports, and stated that the requested extension is necessary for the organization to consider issues raised by the proposed revisions to Order 1050.1E.

In response to ACI–NA's request, the FAA is re-opening the comment period until November 8, 2013. Absent unusual circumstances, the FAA does not anticipate any further extension of the comment period for this rulemaking.

Re-Opening of Comment Period: The FAA has reviewed ACI–NA's request for an extension of the comment period for this notice. ACI–NA has shown a substantive interest in the proposed policy and good cause for re-opening of the comment period. The FAA has determined that re-opening of the comment period is consistent with the public interest, and that good cause exists for taking this action.

Accordingly, the comment period for this notice is extended to November 8, 2013. All comments received between August 14, 2013 and November 8, 2013 will be considered.

Issued in Washington, DC, on October 25, 2013.

Lourdes Q. Maurice,

Executive Director, Office of Environment and Energy.

[FR Doc. 2013–25820 Filed 10–30–13; 8:45 am]

BILLING CODE 4910–13–P

DEPARTMENT OF TRANSPORTATION

Federal Aviation Administration

Approval of Noise Compatibility Program for Tucson International Airport, Tucson, Arizona

AGENCY: Federal Aviation Administration, DOT.

ACTION: Notice.

SUMMARY: The Federal Aviation Administration (FAA) announces its findings on the noise compatibility program submitted by the Tucson Airport Authority (TAA) under the provisions of 49 U.S.C. 47501 et seq. (formerly the Aviation Safety and Noise Abatement Act, hereinafter referred to as ''the Act'') and 14 Code of Federal Regulations (CFR) Part 150 (hereinafter referred to as ''Part 150''). On March 20, 2013, the FAA determined that the noise exposure maps submitted by the TAA under Part 150 were in compliance with applicable requirements. On September 9, 2013, the FAA approved the Tucson International Airport noise compatibility program. Most of the recommendations of the program were approved. No program elements relating to new or revised flight procedures for noise abatement were proposed.

DATED: *Effective Date:* This notice is effective October 31, 2013 and applicable September 9, 2013.

FOR FURTHER INFORMATION CONTACT: Jared Raymond, Airport Planner, FAA Phoenix Airports Field Office, 2800 North 44th Street, Phoenix, Arizona 85008, telephone number (602) 379–3022. Documents reflecting this FAA action may be reviewed at this same location.

SUPPLEMENTARY INFORMATION: This notice announces that the FAA has given its overall approval to the Noise Compatibility Program for Tucson International Airport, effective September 9, 2013. Under section 104(a) of the Aviation Safety and Noise Abatement Act of 1979, as amended (herein after referred to as the ''Act'') [recodified as 49 U.S.C. 47504], an airport operator who has previously submitted a Noise Exposure Map may submit to the FAA a Noise Compatibility Program which sets forth the measures taken or proposed by the airport operator for the reduction of existing non-compatible land uses and prevention of additional non-compatible land uses within the area covered by the Noise Exposure Maps. The Act requires such programs to be developed in consultation with interested and affected parties including local communities, government agencies, airport users, and FAA personnel.

Each airport noise compatibility program developed in accordance with Federal Aviation Regulations (FAR) Part 150 is a local program, not a Federal program. The FAA does not substitute its judgment for that of the airport proprietor with respect to which measures should be recommended for action. The FAA's approval or disapproval of FAR Part 150 program recommendations is measured according to the standards expressed in Part 150 and the Act, and is limited to the following determinations:

a. The Noise Compatibility Program was developed in accordance with the provisions and procedures of FAR Part 150;

b. Program measures are reasonably consistent with achieving the goals of reducing existing non-compatible land uses around the airport and preventing the introduction of additional non-compatible land uses;

c. Program measures would not create an undue burden on interstate or foreign commerce, unjustly discriminate against types or classes of aeronautical uses, violate the terms of airport grant agreements, or intrude into areas preempted by the Federal Government; and

d. Program measures relating to the use of flight procedures can be implemented within the period covered by the program without derogating safety, adversely affecting the efficient use and management of the navigable airspace and air traffic control systems, or adversely affecting other powers and responsibilities of the Administrator prescribed by law.

Specific limitations with respect to FAA's approval of an airport noise compatibility program are delineated in FAR Part 150, section 150.5. Approval is not a determination concerning the acceptability of land uses under Federal, state, or local law. Approval does not by itself constitute an FAA implementing action. A request for Federal action or approval to implement specific noise compatibility measures may be required, and an FAA decision on the request may require an environmental assessment of the proposed action. Approval does not constitute a commitment by the FAA to financially assist in the implementation of the program nor a determination that all measures covered by the program are eligible for grant-in-aid funding from the FAA under the Airport and Airway Improvement Act of 1982, as amended. Where federal funding is sought, requests for project grants must be submitted to the FAA Airports Field Office in Phoenix, Arizona.

The TAA submitted to the FAA on November 26, 2013, the Noise Exposure Maps for evaluation. The FAA determined that the Noise Exposure Maps for Tucson International Airport were in compliance with applicable requirements on March 20, 2013. Notice of this determination was published in the **Federal Register** on March 29, 2013 (Volume 78/No. 61/pages 19355–19356).

The Tucson International Airport study contains a proposed noise compatibility program comprised of actions designed for phased implementation by airport management and adjacent jurisdictions. It was requested that the FAA evaluate and approve this material as a Noise Compatibility Program as described in 49 U.S.C. 47504 (formerly Section 104(b) of the Act). The FAA began its review of the program on March 20,

2013, and was required by a provision of the Act to approve or disapprove the program within 180 days (other than the use of new or modified flight procedures for noise control). Failure to approve or disapprove such program within the 180-day period shall be deemed to be an approval of such program.

The Noise Compatibility Program recommended three Noise Abatement Elements, five Land Use Planning Elements and two Program Management Elements. The FAA completed its review and determined that the procedural and substantive requirements of the Act and FAR Part 150 have been satisfied. The overall program was approved, by the Manager of the Airports Division, Western-Pacific Region, effective September 9, 2013.

Approval was granted for four Land Use Planning Elements and one Program Management Element. The approved measures include: Working with the City of Tucson to review and if necessary modify the boundaries of the Airport Environs Zone (AEZ) Overlay; work with the City of Tucson to review and if necessary modify the land use regulations within the AEZ Overlay as defined in Section 2.8.5 of the City of Tucson Land Use Code; Work with Pima County to review and if necessary modify the boundaries of the Airport Environs and facilities Overlay Zone (AEFZ); work with Pima County to review and if necessary modify the land use regulations within the AEFZ Overlay as defined in Pima County Code; and periodically review and if necessary, update the Noise Exposure Maps (NEM'S) and the Noise Compatibility Program (NCP). Approval as a voluntary measure was given for two Noise Abatement Elements and one Program Management Element. These measures include: Formalizing an agreement with the Arizona Air National Guard (AANG) to limit nighttime/early morning and weekend operations; work with the AANG to develop restrictions on ground operations, including optimal orientation of aircraft during final checks prior to departure to reduce noise impacts, and formalize and expand current public outreach programs. One Noise Abatement Element and one Land Use Planning Element was disapproved for purposes of Part 150, since they did not reduce incompatible land uses or lacked a demonstrated noise benefit to noncompatible land uses exposed to noise levels in the yearly day/night average sound level (DNL) 65 noise contours. These measures included: Study implementing an Optimized Profile Descent (OPD) procedure for one or more runway ends and to investigate opportunities to design Airport development in a manner that both reduces interior noise levels of the development and that acts as a barrier to shield neighboring communities from aircraft noise.

The FAA determinations are set forth in detail in the Record of Approval signed by the Manager of the Airports Division, Western-Pacific Region, on September 9, 2013. The Record of Approval, as well as other evaluation materials and the documents comprising the submittal, are available for review at the FAA office listed above and at the administrative offices of the Tucson International Airport. The Record of Approval also will be available on-line at: *http://www.faa.gov/airports/environmental/airport_noise/part_150/states/.*

Issued in Hawthorne, California, on October 23, 2013.

Brian Q. Armstrong,

Acting Manager, Airports Division, Western-Pacific Region, AWP–600.

[FR Doc. 2013–25826 Filed 10–30–13; 8:45 am]

BILLING CODE 4910–13–P

DEPARTMENT OF TRANSPORTATION

Federal Highway Administration

Environmental Impact Statement, Portageville Bridge Project (Wyoming and Livingston Counties, New York)

AGENCY: Federal Highway Administration (FHWA), United States Department of Transportation (USDOT).

ACTION: Notice of Intent.

SUMMARY: FHWA, as lead agency, is issuing this notice to advise the public that an Environmental Impact Statement (EIS) will be prepared for the proposed project to provide a modern rail crossing at the location of the existing Portageville Bridge (also known as the ''Portage High Bridge'') over the Genesee River in Wyoming and Livingston Counties, New York.

FOR FURTHER INFORMATION CONTACT: Raymond Hessinger, New York State Department of Transportation, 50 Wolf Road, Albany, New York 12232, Telephone: (518) 457–8075; or Jonathan McDade, New York Division Administrator, Federal Highway Administration, Leo W. O'Brien Federal Building, 7th Floor, Room 719, Clinton Avenue and North Pearl Street, Albany, New York 12207, Telephone: (518) 431–4127.

SUPPLEMENTARY INFORMATION: The FHWA, in cooperation with the New York State Department of Transportation (NYSDOT) and Norfolk Southern Railway Company, will prepare an EIS in accordance with the National Environmental Policy Act (NEPA) on a proposal to construct a modern rail crossing of the Genesee River between Wyoming and Livingston Counties in New York.

The purpose of the Project is to address the existing deficiencies at Norfolk Southern's Portageville Bridge (also known as the ''Portage High Bridge'') by providing a modern rail crossing of the Genesee River that is capable of carrying current industry standard freight rail loads, to the greatest degree possible meeting FRA Class 4 speeds, while reducing ongoing maintenance efforts and costs. The Project is needed in order for Norfolk Southern to continue safe, reliable and efficient rail operations on the Southern Tier route. These operations are critical to the economic viability and growth of the Southern Tier and other affected areas of New York.

Alternatives under consideration include: The no-build alternative; rehabilitation or reconstruction of the existing bridge; and construction of a new bridge at approximately the same location or at another location. The NEPA documentation will consider this list of alternatives and evaluations conducted to date, including information documented in a previously-published Draft EIS prepared pursuant to the New York State Environmental Review Act (SEQRA). The NEPA documentation will also consider reasonable and feasible alternatives identified during scoping. The EIS will identify a preferred alternative that meets the Project purpose and need of the project and is considered feasible based on engineering, cost, and social, economic, and environmental considerations.

Information describing the project, alternatives under consideration, and opportunities for agency and public involvement in the process will be sent to the appropriate Cooperating and Participating Agencies and to private organizations and citizens that have expressed an interest in this action. This information will also be available on the Project Web site (*www.dot.ny.gov/portagevillebridge*). The public and agencies will be offered an opportunity to comment on the Purpose and Need, range of alternatives, level of detail, methodologies, etc. This will be accomplished through public and agency outreach which will consist of: A formal public scoping meeting to be held in Mount Morris, New York in November 2013; a public hearing on the

Draft EIS; meetings with the applicable Cooperating and Participating Agencies; and meeting with Section 106 Consulting Parties including federally recognized Indian tribes. The Draft EIS will also be available for public and agency review and comment. FHWA and NYSDOT will provide public notification of the time and location of the meetings and hearings.

The meetings will be accessible to persons with disabilities. If special services, such as an interpreter or sign language services, are needed, please contact Raymond Hessinger, New York State Department of Transportation.

To ensure that a full range of issues related to this proposed action are addressed and all significant issues are identified, comments and suggestions are invited from all interested parties. Comments or questions concerning this proposed action and the EIS should be directed to the FHWA or NYSDOT at the addresses provided above.

(Catalog of Federal Domestic Assistance Program Number 20.205, Highway Planning and Construction. The regulations implementing Executive Order 12372 regarding intergovernmental consultation on Federal programs and activities apply to this program.)

Issued on October 25, 2013.

Jonathan McDade,

New York Division Administrator, Federal Highway Administration.

[FR Doc. 2013–25865 Filed 10–30–13; 8:45 am]

BILLING CODE 4910–22–P

DEPARTMENT OF TRANSPORTATION

Federal Railroad Administration

[Docket No. FRA–2010–0005–N–21]

Proposed Agency Information Collection Activities; Comment Request

AGENCY: Federal Railroad Administration (FRA), Department of Transportation (DOT).

ACTION: Notice and Request for Comments.

SUMMARY: In compliance with the Paperwork Reduction Act of 1995, this notice announces that the Information Collection Request (ICR) abstracted below will be forwarded to the Office of Management and Budget (OMB) for review and comment. The ICR describes the nature of the information collection and its expected burden. The **Federal Register** notice with a 60-day comment period soliciting comments on the following collections of information was published on August 13, 2013.

DATES: Comments must be submitted on or before December 2, 2013.

FOR FURTHER INFORMATION CONTACT: Mr. Robert Brogan, Office of Safety, Planning and Evaluation Division, RRS–21, Federal Railroad Administration, 1200 New Jersey Ave. SE., 3rd Floor, Mail Stop 25, Washington, DC 20590 (telephone: (202) 493–6292), or Ms. Kimberly Toone, Office of Information Technology, RAD–20, Federal Railroad Administration, 1200 New Jersey Ave. SE., 3rd Floor, Mail Stop 35, Washington, DC 20590 (telephone: (202) 493–6132). (These telephone numbers are not toll-free.)

SUPPLEMENTARY INFORMATION: The Paperwork Reduction Act of 1995 (PRA), Public Law 104–13, Section 2, 109 Stat. 163 (1995) (codified as revised at 44 U.S.C. 3501–3520), and its implementing regulations, 5 CFR Part 1320, require Federal agencies to issue two notices seeking public comment on information collection activities before OMB may approve paperwork packages. 44 U.S.C. 3506, 3507; 5 CFR 1320.5, 1320.8(d)(1), 1320.12. On August 13, 2013, FRA published a 60-day notice in the **Federal Register** soliciting comment on this ICR that the agency was seeking OMB approval. 78 FR 49321. FRA received no comments in response to this notice.

Before OMB decides whether to approve these proposed collections of information, it must provide 30 days for public comment. 44 U.S.C. 3507(b); 5 CFR 1320.12(d). Federal law requires OMB to approve or disapprove paperwork packages between 30 and 60 days after the 30 day notice is published. 44 U.S.C. 3507 (b)-(c); 5 CFR 1320.12(d); *see also* 60 FR 44978, 44983, Aug. 29, 1995. OMB believes that the 30 day notice informs the regulated community to file relevant comments and affords the agency adequate time to digest public comments before it renders a decision. 60 FR 44983, Aug. 29, 1995. Therefore, respondents should submit their respective comments to OMB within 30 days of publication to best ensure having their full effect. 5 CFR 1320.12(c); *see also* 60 FR 44983, Aug. 29, 1995.

The summary below describes the nature of the information collection request (ICR) and the expected burden for the ICR that will be submitted for clearance by OMB as required by the PRA.

Title: Alleged Violation Reporting Form

OMB Control Number: 2130–0590

Type of Request: Regular Approval of a Currently Approved Information Collection

Affected Public: U.S. Residents

Abstract: The Alleged Violation Reporting Form is a response to Section 307(b) of the Rail Safety Improvement Act of 2008, signed into law by President George W. Bush on October 16, 2008, which requires Federal Railroad Administration (FRA) to ''provide a mechanism for the public to submit written reports of potential violations of Federal railroad safety and hazardous materials transportation laws, regulations, and orders to the Federal Railroad Administration.'' The Alleged Violation Reporting Form allows the general public to submit alleged violations directly to FRA. The form's goal is to allow FRA to collect information necessary to investigate the alleged violation and to provide follow up correspondence with the submitting party.

The Alleged Violation Reporting Form collects the name, phone number and email of the person submitting the alleged violations; the preferred method by which to contact the person; the railroad or company name that committed the alleged violation, the date and time the alleged violation occurred; the location the alleged violation occurred; and details about the violation. All information is voluntary. FRA will collect the information via a form on the FRA public Web site. FRA may share the information collected with FRA employees, State DOT partners, and law enforcement agencies.

Form Number(s): FRA F 6180.151

Annual Estimated Burden Hours: 50 hours

Addressee: Send comments regarding this information collection to the Office of Information and Regulatory Affairs, Office of Management and Budget, 725 Seventeenth Street NW., Washington, DC 20503, Attention: FRA Desk Officer. Comments may also be sent via email to OMB at the following address: *oira_submissions@omb.eop.gov*

Comments are invited on the following: Whether the proposed collection of information is necessary for the proper performance of the functions of the Department, including whether the information will have practical utility; the accuracy of the Department's estimate of the burden of the proposed information collection; ways to enhance the quality, utility, and clarity of the information to be collected; and ways to minimize the burden of the collection of information on respondents, including the use of automated collection techniques or other forms of information technology.

A comment to OMB is best assured of having its full effect if OMB receives it

within 30 days of publication of this notice in the **Federal Register**.

Authority: 44 U.S.C. 3501–3520.

Rebecca Pennington,

Chief Financial Officer.

[FR Doc. 2013–25952 Filed 10–30–13; 8:45 am]

BILLING CODE 4910–06–P

DEPARTMENT OF TRANSPORTATION

Federal Railroad Administration

Agency Request for Emergency Processing of Collections of Information Associated With Today's Publication of Notice of Funding Availability and Solicitation of Applications

AGENCY: Federal Railroad Administration (FRA), United States Department of Transportation (DOT).

ACTION: Notice.

SUMMARY: The Federal Railroad Administration (FRA) hereby gives notice that it has submitted the following information collection request (ICR) to the Office of Management and Budget (OMB) for Emergency Processing under the Paperwork Reduction Act of 1995 (Pub. L. 104–13, 44 U.S.C. 3501 *et seq.*). FRA requests that OMB authorize the collection of information identified below on or before November 6, 2013, for 180 days after the date of approval by OMB. A copy of this ICR, with applicable supporting documentation, may be obtained by calling FRA's Clearance Officer, Mr. Robert Brogan (tel. (202) 493–6292). These numbers are not toll-free. A copy of this ICR may also be obtained electronically by contacting Mr. Brogan at *robert.brogan@dot.gov.* Comments and questions about the ICR identified below should be directed to the Office of Information and Regulatory Affairs (OIRA), Attn: FRA OMB Desk Officer, 725 17th St. NW., Washington, DC 20503. Comments and questions about the ICR identified below may also be transmitted electronically to OIRA at *oira_submissions@omb.eop.gov.*

DATES: Comments should be submitted as soon as possible upon publication of this notice in the **Federal Register**.

Title: Notice of Funding Availability and Solicitation of Applications for Grants under the Railroad Rehabilitation and Repair Grant Program.

OMB Control Number: 2130—New.

Frequency: One-time.

Affected Public: 49 States.

Form(s): SF–424, SF–424C, SF–424D, SF LLL.

Other Instruments: Collection of Information Associated with the NOFA Published in Today's **Federal Register**.

Estimated Total Annual Number of Responses: 10.0 Grant Applications (Electronic).

Estimated Total Annual Burden Hours: 4,790 hours.

SUPPLEMENTARY INFORMATION: There is approximately $1,870,000 available in the Railroad Rehabilitation and Repair Grant Program, which was originally supported with up to $20,000,000 of Federal funds provided to FRA as part of the Consolidated Security, Disaster Assistance, and Continuing Appropriations Act, 2009 (Pub. L. 110–329, September 30, 2008) (the Act). On November 6, 2008, FRA issued a Notice of Funding Availability (NOFA) soliciting applications for grants to fund eligible projects. FRA received applications and evaluated them according to criteria described in the notice. Based on the applications submitted and the subsequent evaluations, FRA selected projects totaling approximately $15,000,000 under this Program. Then on October 7, 2009, FRA issued another NOFA for the remaining $5,000,000. FRA received applications and evaluated them according to criteria described in the notice and subsequently selected 10 additional projects to receive funding. Due to a variety of factors, such as projects completed under their awarded amount, FRA has approximately $1,870,000 in funds remaining for this program.

Funds provided under this Program will assist Class II and Class III railroads to repair and rehabilitate infrastructure damaged by hurricanes, floods, and other natural disasters in areas for which the President declared a major disaster after January 1, 2008, under Title IV of the Robert T. Stafford Disaster Relief and Emergency Assistance Act of 1974. Applicant eligibility is limited to State departments of transportation.

The funding provided under these grants will be made available to grantees on a reimbursement basis. FRA anticipates awarding grants to multiple eligible participants. FRA may choose to award a grant or grants within the available funds in any amount. The grantees must exhaust all other Federal and State resources prior to seeking assistance under this Program. FRA will begin accepting grant applications on November 6, 2013. Applications may be submitted until 5:00 p.m. EST, December 9, 2013.

Issued in Washington, DC, on October 29, 2013.

Corey Hill,

Director, Office of Passenger and Freight Programs.

[FR Doc. 2013–26082 Filed 10–30–13; 8:45 am]

BILLING CODE 4910–06–P

DEPARTMENT OF TRANSPORTATION

Federal Railroad Administration

Notice of Funding Availability and Solicitation of Applications for Grants Under the Railroad Rehabilitation and Repair Grant Program

AGENCY: Federal Railroad Administration (FRA), Department of Transportation (DOT).

ACTION: Notice of funding availability; solicitation of applications.

SUMMARY: Under this Notice, the FRA encourages interested State departments of transportation to submit applications for grants to repair and rehabilitate Class II and Class III railroad infrastructure damaged by hurricanes, floods, and other natural disasters in areas for which the President declared a major disaster after January 1, 2008, under Title IV of the Robert T. Stafford Disaster Relief and Emergency Assistance Act of 1974. The funding opportunities described in this notice are available under Catalog of Federal Domestic Assistance (CFDA) number 20.314.

DATES: FRA will begin accepting grant applications on November 6, 2013. Applications may be submitted until 5 p.m. EST, December 9, 2013. FRA reserves the right to modify this deadline.

ADDRESSES: Applications for grants under this Program must be submitted electronically to ''Grants.gov'' at *http://www.grants.gov.* Grants.Gov allows organizations to find and apply electronically for competitive grant opportunities from all Federal grant-making agencies. Any State wishing to submit an application pursuant to this notice should immediately initiate the process of registering with Grants.Gov.

For application materials that an applicant is unable to submit via Grants.Gov (such as oversized engineering drawings), applicants may submit an original and two (2) copies to FRA at the following address: Federal Railroad Administration, Attention: Katy Bryant, Office of Passenger and Freight Programs, 1200 New Jersey Avenue SE., Mail Stop 20,Washington, DC 20590.

FOR FURTHER INFORMATION CONTACT: Mary Ann McNamara, Office of Passenger and Freight Programs, Federal Railroad Administration, 1200 New Jersey Avenue SE., Mail Stop 20, Washington, DC 20590; Phone: (202) 493–6393; Fax: (202) 493–6333.

SUPPLEMENTARY INFORMATION: There is approximately $1,870,000 available in the Railroad Rehabilitation and Repair Grant Program, which was originally supported with up to $20,000,000 of Federal funds provided to FRA as part of the Consolidated Security, Disaster Assistance, and Continuing Appropriations Act, 2009 (Pub. L.110–329, September 30, 2008) (the Act). On November 6, 2008, FRA issued a Notice of Funding Availability (NOFA) soliciting applications for grants to fund eligible projects. FRA received applications and evaluated them according to criteria described in the notice. Based on the applications submitted and the subsequent evaluations, FRA selected projects totaling approximately $15,000,000 under this Program. Then on October 7, 2009, FRA issued another NOFA for the remaining $5,000,000. FRA received applications and evaluated them according to criteria described in the notice and subsequently selected 10 additional projects to receive funding. Due to a variety of factors, such as projects completed under their awarded amount, FRA has approximately $1,870,000 in funds remaining for this program.

Purpose: Funds provided under this Program will assist Class II and Class III railroads recover from disasters declared between January 1, 2008 and the publication date of this notice of funding availability.

Authority: The Consolidated Security, Disaster Assistance, and Continuing Appropriations Act, 2009 (Pub. L. 110–329, September 30, 2008).

Funding: Approximately $1,870,000 of the $20,000,000 originally appropriated remains available until expended. The Act directs the Secretary of Transportation to competitively award grants covering up to 80 percent of project costs. The remaining grantee match should be provided in non-Federal cash, equipment, or supplies. The funding provided for these grants will be made available to the grantee(s) on a reimbursable basis. It is anticipated that the available funding could support projects proposed by multiple applicants. FRA may choose to award a grant or grants in any amount within the limit of the available funds. The grantees must exhaust all other Federal and State resources prior to seeking assistance under this Program.

Schedule for Railroad Rehabilitation and Repair Grant Program: FRA will begin accepting grant applications on November 6, 2013. All applications must be received by 5:00 p.m. EST, December 9, 2013.

Eligible Applicants: The department of transportation of any eligible State may apply for funding under this notice, provided that the applicant State has an eligible project and has exhausted all other Federal and State resources prior to seeking assistance under this Program.

Eligible Projects: To be eligible for funding under this Program, a project must include the rehabilitation and repair of Class II or Class III railroad infrastructure damaged by hurricanes, floods, and other natural disasters in counties for which the President declared a major disaster under Title IV of the Robert T. Stafford Disaster Relief and Emergency Assistance Act of 1974 between January 1, 2008 and the date of the publication of this notice in the **Federal Register** (*http://www.fema.gov/news/disasters.fema#sev1*). Rehabilitation or repairs must be made to rights-of-way, bridges, signals, and other infrastructure which are part of the general railroad system of transportation and primarily used by railroads to move freight traffic.

Funding Period: Funds will be available under this program only for the reimbursement of costs incurred after a major disaster declaration that was made between January 1, 2008 and the date of the publication of this notice of funding availability in the counties covered by such a declaration.

Selection Criteria: FRA will consider the following selection factors in evaluating applications for grants under this Program:

1. The inability of the Class II or Class III railroad to fund the project without Federal funding under the Railroad Rehabilitation and Repair Grant Program, including the applicant demonstrating that it has exhausted all other Federal and State resources.

2. The effects on rail operations, specifically the movement of freight, of the proposed rehabilitation or repair.

3. The likelihood of the continued railroad operations on the track that is proposed to be repaired or rehabilitated for more than three years after project work is complete.

Required Grant Application Documents: Applications are required to contain the following documents:

1. Project Narrative/Statement of Work (additional instructions below);

2. Detailed Budget (additional instructions below);

3. SF 424: Application for Federal Assistance (available at *http://www.fra.dot.gov/Page/P0267*);

4. SF 424C: Budget Information-Construction (available at *http://www.fra.dot.gov/Page/P0267*);

5. SF 424D: Assurances-Construction (available at *http://www.fra.dot.gov/Page/P0267*);

6. SF LLL: Disclosure of Lobbying Activities (available at *http://www.whitehouse.gov/sites/default/files/omb/grants/sflllin.pdf*);

7. A copy of the applicant's most recent audit performed in compliance with OMB Circular A–133, if available (information on Circular A–133 can be found at *http://www.whitehouse.gov/omb/circulars/a133/a133.html*); and

8. FRA's Additional Assurance and Certifications (available at *http://www.fra.dot.gov/eLib/Details/L02985*).

Project Narrative/Statement of Work: The following points describe the minimum content which will be required in the Project Narrative/Statement of Work elements of grant applications. These requirements must be satisfied through a narrative statement submitted by the applicant, and may be supported by spreadsheet documents, tables, drawings, and other materials, as appropriate. FRA recommends that applicants read this section carefully and submit all required information. If an application does not address each of these requirements to FRA's satisfaction, the application may be considered incomplete and removed from consideration for award. Each Project Narrative/Statement of Work must:

1. Designate a point of contact for the applicant and provide his or her name, title, and contact information, including phone number, mailing address and email address. The point of contact must be an employee of the applicant (i.e. a State employee).

2. Include an explanation of why the project is an eligible project (including the Federal Emergency Management Agency disaster declaration number, which is listed at *http://www.fema.gov/news/disasters.fema#sev1*) and a thorough discussion of how the project meets all of the selection criteria described above. Applicants should note that FRA evaluates applications based upon the selection criteria. If an application does not sufficiently address the selection criteria, FRA will have little or no basis on which to evaluate the application; thus, it will likely not be a competitive application.

3. In responding to the first selection criteria listed above, applicants must

identify all funds (including amounts) received from other Federal and/or State disaster relief programs that directly benefited the project(s) for which funds are being sought under this Program, or demonstrate that all such efforts at procuring such funding have failed or been exhausted. This demonstration should include a recitation of specific Federal and State disaster relief programs investigated by the applicant. Among the Federal programs which the applicant might investigate are those administered by the Federal Emergency Management Agency, the Small Business Administration, the Federal Highway Administration, and the U.S. Department of Agriculture.

4. Provide an overview of all work done to date to rehabilitate and repair damage caused by the natural disaster.

5. Provide a detailed description of the scope of work for the proposed project and include the anticipated, or actual, project schedule. Describe the proposed project's physical location, mile-post limits, and include any drawings, plans, or schematics that have been prepared relating to the proposed project.

If funding requested under this Program is only going to support a portion of the overall rehabilitation and repair of the applicant's project, describe the complete project and specify which portion will involve Federal funding. In addition, FRA strongly encourages applicants to estimate total project costs and explain how the affected Class II and Class III railroad will finance the completed project.

6. Describe the source and amount of non-Federal funds, broken down by cash, equipment, or supplies.

7. Describe proposed project implementation and an overview of project management arrangements. Include descriptions of expected arrangements for project contracting, contract oversight, change-order management, risk management, and conformance to Federal requirements for project progress reporting (described in Appendices 1 and 2).

8. For the railroad(s) operating on the infrastructure proposed to be rehabilitated or repaired, describe the frequency of service, axle-load limits, and estimated railroad gross ton miles per mile for the first full year after completion of the project.

9. Describe the status or progress toward completing any environmental documentation or clearance for the proposed project under the National Environmental Policy Act, the National Historic Preservation Act, section 4(f) of the DOT Act, or other applicable federal or state environmental impact assessment laws. FRA's Procedures for Considering Environmental Impacts (64 FR 28545) (May 26, 1999) (*http://www.fra.dot.gov/Page/P0215*) describe FRA's process for the assessment of environmental impacts and the preparation and processing of appropriate documents. For projects that may be categorically excluded from detailed environmental review, as discussed in FRA's Procedures, categorical exclusion worksheets are available at: *http://www.fra.dot.gov/Page/P0550.* Applicants are encouraged to contact FRA as early as possible in the environmental/historic preservation review process to discuss the environmental review.

Detailed Budget: Applicants must present a detailed budget for the proposed project that includes both Federal funds and matching funds. Items of cost included in the budget must be reasonable, allocable and necessary for the project. The budget for the cost of the project should separate the total cost of the project into the following categories, if applicable: (1) Administrative and legal expenses; (2) Land, structures, rights-of-way, and appraisals; (3) Relocation expenses and payments; (4) Architectural and engineering fees; (5) Project inspection fees; (6) Site work; (7) Demolition and removal; 8) Construction labor, supervision, management, and materials, by type (e.g. ties, rail, signals, switches); (9) Equipment; (10) Miscellaneous; and (11) Contingencies. Costs may be reimbursed as long as expenditures were incurred after the date of the natural disaster. Additional information on project budgets is contained in Appendix 3.

Format: Excluding spreadsheets, drawings, and tables, the Project Narrative/Statement of Work for grant applications may not exceed twenty-five pages in length. With the exclusion of oversized engineering drawings (which may be submitted in hard copy to the FRA at the address indicated above), all application materials should be submitted as attachments through Grants.Gov. Spreadsheets consisting of budget or financial information should be submitted via Grants.Gov as Microsoft Excel (or compatible) documents.

Labor Standards: The Act requires that all grantees comply with the Davis-Bacon Act (40 U.S.C. 3141 et seq.) as provided for in 49 U.S.C. 24312. The Davis-Bacon Act is a measure that fixes a floor under wages on Federal government projects and provides, in pertinent part, that the minimum wages to be paid for classes of workers under a contract for the construction, alteration, and/or repair of a Federal public building or public work must be based upon wage rates determined by the Secretary of Labor to be prevailing for corresponding classes of workers employed on projects of a character similar to the contract work in the civil subdivision of the State in which the work is to be performed.

Award Notices: Applications selected for funding will be announced after the application review period. FRA will contact applicants with successful applications after announcement with information and instructions about the award process. Notification of a selected application is not an authorization to begin proposed project activities. The period of performance for this grant program is dependent on the project. However, any unobligated funds will be deobligated 120 days after the period of performance end date of the grant, as described in Appendix 2.4. Extensions to the period of performance will be considered only through written requests to FRA with specific and compelling justifications for why an extension is required.

Appendix 1: Administrative and National Policy Requirements

Appendix 1.1 Standard Financial and Program Administration Requirements

Grant recipients must follow all standard financial and program administration requirements, including:

Administrative Requirements

- 49 CFR Part 18, Uniform Administrative Requirements for Grants and Cooperative Agreements to State and Local Governments
- 49 CFR Part 19, Uniform Administrative Requirements for Grants and Cooperative Agreements with Institutions of Higher Education, Hospitals, and Other Non-Profit Organizations (OMB Circular A–110)

Cost Principles

- 2 CFR Part 225, Cost Principles for State, Local, and Indian Tribal Governments (OMB Circular A–87)
- 2 CFR Part 220, Cost Principles for Educational Institutions (OMB Circular A–21)
- 2 CFR Part 230, Cost Principles for Non-Profit Organizations (OMB A–122)
- Federal Acquisition Regulations (FAR), Part 31.2 Contract Cost Principles and Procedures, Contracts with Commercial Organizations

Audit Requirements

- OMB Circular A–133, Audits of States, Local Governments, and Non-Profit Organizations

Appendix 1.2 Administrative and National Policy Requirements

Grant recipients must follow all administrative and national policy requirements including: Procurement

standards, compliance with Federal civil rights laws and regulations, disadvantaged business enterprises (DBE), debarment and suspension, drug-free workplace, FRA's and OMB's Assurances and Certifications, Americans with Disabilities Act (ADA), environmental protection, National Environmental Policy Act (NEPA), and environmental justice.

Appendix 1.3 Freedom of Information Act (FOIA)

As a Federal agency, FRA is subject to the Freedom of Information Act (FOIA) (5 U.S.C. 552), which generally provides that any person has a right, enforceable in court, to obtain access to Federal agency records, except to the extent that such records (or portions of them) are protected from public disclosure by one of nine exemptions or by one of three special law enforcement record exclusions. Grant applications and related materials submitted by applicants pursuant to this guidance will become agency records, and thus are subject to the FOIA and to public release through individual FOIA requests. FRA also recognizes that certain information submitted in support of an application for funding in accordance with this guidance could be exempt from public release under FOIA as a result of the application of one of the FOIA exemptions, most particularly Exemption 4, which protects trade secrets and commercial or financial information obtained from a person that is privileged or confidential (5 U.S.C. 552(b)(4)). In the context of this grant program, commercial or financial information obtained from a person could be confidential if disclosure is likely to cause substantial harm to the competitive position of the person from whom the information was obtained (see *National Parks & Conservation Association v. Morton,* 498 F.2d 765, 770 (D.C. Cir. 1974)). Entities seeking exempt treatment must provide a detailed statement supporting and justifying the request and should follow FRA's existing procedures for requesting confidential treatment in the railroad safety context found at 49 CFR 209.11. As noted in the Department's FOIA implementing regulation (49 CFR part 7), the burden is on the entity requesting confidential treatment to identify all information for which exempt treatment is sought and to persuade the agency that the information should not be disclosed (see 49 CFR 7.17). The final decision as to whether the information meets the standards of Exemption 4 rests with FRA.

Appendix 2: Additional Information on Award Administration and Grant Conditions

Appendix 2.1 Reporting Requirements

Reporting requirements must be met throughout the life of the grant (additional detail will be included in the award package provided to selected applicants).

• *Progress Reports*—Progress reports are to be submitted quarterly. These reports must relate the state of completion of items in the Statement of Work to expenditures of the relevant budget elements. The grant recipient must furnish the quarterly progress report to the FRA on or before the 30th calendar day of the month following the end of the quarter being reported. Grantees must submit reports for the periods: January 1–March 31, April 1–June 30, July 1–September 30, and October 1–December 31. Each quarterly report must set forth concise statements concerning activities relevant to the project, and should include, but not be limited to, the following: (a) An account of significant progress (findings, events, trends, etc.) made during the reporting period; (b) a description of any technical and/or cost problem(s) encountered or anticipated that will affect completion of the grant within the time and fiscal constraints as set forth in the agreement, together with recommended solutions or corrective action plans (with dates) to such problems, or identification of specific action that is required by the FRA, or a statement that no problems were encountered; and (c) an outline of work and activities planned for the next reporting period.

• *Quarterly Federal Financial Report (SF–425)*—The Grantee must submit a quarterly Federal financial report electronically in FRA's web-based grant management system, GrantSolutions, on or before the thirtieth (30th) calendar day of the month following the end of the quarter being reported (e.g., for quarter ending March 31, the SF–425 is due no later than April 30). A report must be submitted for every quarter of the period of performance, including partial calendar quarters, as well as for periods where no grant activity occurs. The Grantee must use SF–425, Federal Financial Report, in accordance with the instructions accompanying the form, to report all transactions, including Federal cash, Federal expenditures and unobligated balance, recipient share, and program income.

• *Interim Report(s)*—If required, interim reports will be due at intervals specified in the Statement of Work and must be submitted to FRA.

• *Final Report(s)*—Within 90 days after the period of performance end date of the grant or termination by FRA, the Grantee must submit a Summary Project Report in the GrantSolutions system. This report should detail the results and benefits of the Grantee's improvement efforts.

• *Reports, Presentations and Other Deliverables*—Whether for technical examination, administrative review, or publication, all submittals shall be of a professional quality and suitable for their intended purpose. Due dates for submittals shall be based on the specified intervals or days from the effective date of the agreement.

Appendix 2.2 Audit Requirements

Grant recipients that expend $500,000 or more of Federal funds during their fiscal year, combined from all sources, are required to submit an organization-wide financial and compliance audit report. The audit must be performed in accordance with U.S. General Accountability Office, Government Auditing Standards, located at *http://www.gao.gov/govaud/ybk01.htm*, and OMB Circular A–133, Audits of States, Local Governments, and Non-Profit Organizations, located at *http://www.whitehouse.gov/omb/circulars/a133/a133.html*. Currently, audit reports must be submitted to the Federal Audit Clearinghouse no later than nine months after the end of the recipient's fiscal year. In addition, FRA and the Comptroller General of the United States must have access to any books, documents, and records of grant recipients for audit and examination purposes. The grant recipient will also give FRA or the Comptroller, through any authorized representative, access to, and the right to examine all records, books, papers or documents related to the grant. Grant recipients must require that sub-grantees comply with the audit requirements set forth in OMB Circular A–133. Grant recipients are responsible for ensuring that sub-recipient audit reports are received and for resolving any audit findings.

Appendix 2.3 Monitoring Requirements

Grant recipients will be monitored periodically by FRA to ensure that the project goals, objectives, performance requirements, timelines, milestones, budgets, and other related program criteria are being met. FRA may conduct monitoring activities through a combination of office-based reviews and onsite monitoring visits. Monitoring will involve the review and analysis of the financial, programmatic, and compliance issues relative to each program and will identify areas where technical assistance and other support may be needed. The recipient is responsible for monitoring award activities, including sub-awards and sub-grantees, to provide reasonable assurance that the award is being administered in accordance with Federal requirements. Financial monitoring responsibilities include the accounting of recipients and expenditures, cash management, maintaining of adequate financial records, and refunding expenditures disallowed by audits.

Appendix 2.4 Closeout Process

Project closeout occurs when all required project work and all administrative procedures described in 49 CFR section 262.19, as applicable, have been completed, and when FRA notifies the grant recipient and forwards the final Federal assistance payment, or when FRA acknowledges the grant recipient's remittance of the proper refund. Project closeout should not invalidate any continuing obligations imposed on the Grantee by an award or by the FRA's final notification or acknowledgment. Within 90 days after the period of performance end date of the grant or termination by FRA, grantees agree to submit a final Federal Financial Report (SF–425), a certification or summary of project expenses, a final report, and third party audit reports, as applicable.

Appendix 3: Additional Information on Applicant Budgets

The information contained in this appendix is intended to assist applicants with developing the SOW budget and OMB Standard Form 424C: Budget Information—Construction Programs. Applicants must present a detailed budget for the proposed project that includes both Federal funds and matching funds. Items of cost included in the budget must be reasonable, allocable, and necessary for the project. At a minimum, the budget should separate total cost of the

project into the following categories and provide a basis of computation for each cost:

• *Administrative and Legal Expenses:* List the estimated amounts needed to cover administrative expenses. Do not include costs which are related to the normal functions of government. Allowable legal costs are generally only those associated with the purchases of land which is allowable for Federal participation and certain services in support of construction of the project. This may include:

○ Hours/Rate and total cost of local government staff
○ Hours/Rate and total cost of outside counsel fees
○ Hours/Rate and total cost of consultants

• *Land, structures, rights-of-way, appraisals, and related items:* List the estimate site and right(s)-of-way acquisition costs (this includes purchase, lease, and/or easements). If possible, include details of number of acres, acre cost, square-footage, and square footage cost.

• *Relocation expenses and payments:* List the estimated costs relation to relocation advisory assistance, replacement of housing, relocation payments to displaces persons and businesses, etc. This may include:

○ The gross salaries and wages of employees for the grantee who will be directly engaged in performing demolition or removal of structures from developed land

• *Architectural and engineering fees:* List the estimated basic engineering fees related to construction (this includes start-up services and preparation of project performance work plan).

• *Other architectural and engineering fees:* List the estimated engineering costs, such as surveys, tests, soil borings, etc.

• *Project inspection fees:* List the estimated engineering inspection costs. This may include:

○ Rate of project inspector
○ Construction monitoring
○ Audit or construction programs

• *Site Work:* List the estimated costs of site preparation and restoration which are not included in the basic construction contract. This may include:

○ Clearing
○ Erosion control
○ Reseeding

• *Demolition and removal:* List the estimated costs related to demolition activities.

• *Construction:* List the estimated cost of the construction contract. This may include costs for:

○ Labor costs, e.g., associated with site preparation and installation of grade crossings, highway warning signs, etc.
○ Equipment rental/purchase, e.g., an excavator or bulldozer
○ Materials, e.g., Rail anchors, retaining walls, etc.

• *Equipment:* List the estimated cost of office, shop, laboratory, safety equipment, etc. to be used at the facility, if such costs are not included in the construction contract.

• *Miscellaneous:* List the estimated miscellaneous costs.

• *Contingencies:* List the estimated contingency costs.

Issued in Washington, DC, on October 29, 2013.

Corey Hill,

Director, Office of Passenger and Freight Programs.

[FR Doc. 2013–26081 Filed 10–30–13; 8:45 am]

BILLING CODE 4910–06–P

NATIONAL HIGHWAY TRAFFIC SAFETY ADMINISTRATION

[Docket No. NHTSA–2013–0115]

Technical Report: Evaluation of the Certified-Advanced Air Bags

AGENCY: National Highway Traffic Safety Administration (NHTSA), Department of Transportation.

ACTION: Request for comments on technical report.

SUMMARY: This notice announces NHTSA's publication of a Technical Report reviewing and evaluating certified-advanced air bags. The report's title is: *Evaluation of the Certified-Advanced Air Bags.*

DATES: Comments must be received no later than February 28, 2014.

ADDRESSES:

Report: The technical report is available on the Internet for viewing in PDF format at *http://www-nrd.nhtsa.dot.gov/Pubs/811834.pdf.* You may obtain a copy of the report free of charge by sending a self-addressed mailing label to Nathan K. Greenwell (NVS–431), National Highway Traffic Safety Administration, Room W53–438, 1200 New Jersey Avenue SE., Washington, DC 20590.

Comments: You may submit comments [identified by Docket Number NHTSA–2013–0115] by any of the following methods:

• *Federal eRulemaking Portal:* Go to *http://www.regulations.gov.* Follow the online instructions for submitting comments.

• *Fax:* 1–202–366–3189.

• *Mail:* Docket Management Facility, M–30, U.S. Department of Transportation, West Building, Ground Floor, Rm. W12–140, 1200 New Jersey Avenue SE., Washington, DC 20590.

• *Hand Delivery:* West Building Ground Floor, Room W12–140, 1200 New Jersey Avenue SE., between 9 a.m. and 5 p.m. Eastern Time, Monday through Friday, except Federal holidays.

You may call Docket Management at 202–366–9826.

Instructions: For detailed instructions on submitting comments, see the Procedural Matters section of this document. Note that all comments received will be posted without change to *http://www.regulations.gov*, including any personal information provided.

FOR FURTHER INFORMATION CONTACT: Nathan K. Greenwell, Mathematical Statistician, Evaluation Division, NVS–431, National Center for Statistics and Analysis, National Highway Traffic Safety Administration, Room W53–438, 1200 New Jersey Avenue SE., Washington, DC 20590. Telephone: 202–366–3860. Email: *nathan.greenwell@dot.gov.*

For information about NHTSA's evaluations of the effectiveness of existing regulations and programs: You may see a list of published evaluation reports at *http://www-nrd.nhtsa.dot.gov/cats/listpublications.aspx?Id=226&ShowBy=Category* and if you click on any report you will be able to view it in PDF format.

SUPPLEMENTARY INFORMATION: The purpose of this report is to analyze the changes and redesigns of frontal air bags and their effect on occupant protection in frontal crashes. Frontal air bags have gone through a series of changes in response to amendments to Federal Motor Vehicle Safety Standard No. 208, ''Occupant crash protection.'' In 1998–1999, vehicle manufacturers were permitted to sled test in lieu of a barrier impact to certify that the air bags would protect an unbelted occupant (''sled certification''), which allowed air bags to be redesigned by depowering and/or reducing the volume or rearward extent of air bags. Then in 2003–2006, air bags were required to not deploy at all for children or deploy only at a low level of force (''certified-advanced air bags''). Most manufacturers chose to not deploy air bags at all for children, using occupant detection sensors to suppress the air bags. Statistical analyses of crash data compare fatality risk with certified-advanced and sled-certified air bags.

• Fatality risk in frontal crashes was 4 percent lower for drivers with certified-advanced air bags than with sled-certified air bags; for right-front passengers, it was 2 percent higher; at neither position is the difference between certified-advanced and sled-certified air bags statistically significant.

• The fatality rate, in frontal crashes per billion vehicle registration years showed a 4 percent reduction overall, 5 percent reduction for drivers, and 5 percent reduction for child right-front passengers 12 and younger, after vehicles were equipped with certified-advanced air bags. None of these were statistically significant.

Overall, the analysis found no evidence that certified-advanced air bags result in higher fatality risk to front-seat

occupants in frontal crashes when compared to sled-certified air bags.

Procedural Matters

How can I influence NHTSA's thinking on this subject?

NHTSA welcomes public review of the technical report. NHTSA will submit to the Docket a response to the comments and, if appropriate, will supplement or revise the report.

How do I prepare and submit comments?

Your comments must be written and in English. To ensure that your comments are correctly filed in the Docket, please include the Docket number of this document (NHTSA–2013–0115) in your comments.

Your primary comments must not be more than 15 pages long (49 CFR 553.21). However, you may attach additional documents to your primary comments. There is no limit on the length of the attachments.

Anyone is able to search the electronic form of all comments received into any of our dockets by the name of the individual submitting the comment (or signing the comment, if submitted on behalf of an association, business, labor union, etc.). You may review DOT's complete Privacy Act Statement in the **Federal Register** published on April 11, 2000 (65 FR 19477) or you may visit *http://www.regulations.gov.*

Please send two paper copies of your comments to Docket Management, fax them, or use the Federal eRulemaking Portal. The mailing address is U.S. Department of Transportation, Docket Management Facility, M–30, West Building, Ground Floor, Rm. W12–140, 1200 New Jersey Avenue SE., Washington, DC 20590. The fax number is 1–202–366–3189. To use the Federal eRulemaking Portal, go to *http://www.regulations.gov* and follow the online instructions for submitting comments.

We also request, but do not require you to send a copy to Nathan K. Greenwell, Mathematical Statistician, Evaluation Division, NVS–431, National Highway Traffic Safety Administration, Room W53–438, 1200 New Jersey Avenue SE., Washington, DC 20590 (or email them to *nathan.greenwell@dot.gov*). He can check if your comments have been received at the Docket and he can expedite their review by NHTSA.

How can I be sure that my comments were received?

If you wish Docket Management to notify you upon its receipt of your comments, enclose a self-addressed, stamped postcard in the envelope containing your comments. Upon receiving your comments, Docket Management will return the postcard by mail.

How do I submit confidential business information?

If you wish to submit any information under a claim of confidentiality, send three copies of your complete submission, including the information you claim to be confidential business information, to the Chief Counsel, National Highway Traffic Safety Administration, 1200 New Jersey Avenue SE., Washington, DC 20590. Include a cover letter supplying the information specified in our confidential business information regulation (49 CFR Part 512).

In addition, send two copies from which you have deleted the claimed confidential business information to U.S. Department of Transportation, Docket Management Facility, M–30, West Building, Ground Floor, Rm. W12–140, 1200 New Jersey Avenue SE., Washington, DC 20590, or submit them via the Federal eRulemaking Portal.

Will the agency consider late comments?

In our response, we will consider all comments that Docket Management receives before the close of business on the comment closing date indicated above under DATES. To the extent possible, we will also consider comments that Docket Management receives after that date.

Please note that even after the comment closing date, we will continue to file relevant information in the Docket as it becomes available. Further, some people may submit late comments. Accordingly, we recommend that you periodically check the Docket for new material.

How can I read the comments submitted by other people?

You may read the materials placed in the docket for this document (e.g., the comments submitted in response to this document by other interested persons) at any time by going to *http://www.regulations.gov.* Follow the online instructions for accessing the dockets. You may also read the materials at the Docket Management Facility by going to the street address given above under **ADDRESSES**. The Docket Management Facility is open between 9 a.m. and 5 p.m. Eastern Time, Monday through Friday, except Federal holidays.

Authority: 49 U.S.C. 30111, 30168; delegation of authority at 49 CFR 1.50 and 501.8.

Issued in Washington, DC, on October 28, 2013.

James F. Simons,

Director, Office of Regulatory Analysis and Evaluation.

[FR Doc. 2013–25951 Filed 10–30–13; 8:45 am]

BILLING CODE 4910–59–P

DEPARTMENT OF TRANSPORTATION

Pipeline and Hazardous Materials Safety Administration

[Docket No. PHMSA–2013–0097]

Pipeline Safety: Reminder of Requirements for Liquefied Petroleum Gas and Utility Liquefied Petroleum Gas Pipeline Systems

AGENCY: Pipeline and Hazardous Materials Safety Administration (PHMSA); DOT.

ACTION: Notice; Correction of Advisory Bulletin.

SUMMARY: PHMSA published an Advisory Bulletin in the **Federal Register** on July 18, 2013, (78 FR 42889) reminding owners and operators of liquefied petroleum gas (LPG) and utility liquefied petroleum gas (Utility LP-Gas) plants of their obligation to follow certain sections of Part 192 in addition to the American National Standards Institute/National Fire Protection Association (ANSI/NFPA) standards 58 or 59. This document supersedes the July 18, 2013, Advisory Bulletin by correcting a typographical error in the sixth bullet and removing the exemption for small utility LP gas systems from Subpart N (Qualification of Pipeline Personnel) from the bulleted list.

FOR FURTHER INFORMATION CONTACT: Todd DelVecchio by phone at 727–213–1575 or by email at *todd.delvecchio@dot.gov,* or Mike Israni at 202–366–4571 or by email at *mike.israni@dot.gov.* Information about PHMSA may be found at *http://phmsa.dot.gov.*

SUPPLEMENTARY INFORMATION:

I. Background

49 CFR 192.11 requires that each plant that supplies petroleum gas by pipeline to a natural gas distribution system must meet the requirements of Part 192 and ANSI/NFPA 58 and 59 (2004) (192.11(a)). It also states that each pipeline system subject to Part 192 that transports only petroleum gas or petroleum gas/air mixtures must meet the requirements of Part 192 and of ANSI/NFPA 58 and 59 (192.11(b)).

Finally, the regulation lays out a primacy provision stating that in the event of a conflict between the regulation and the standard, ANSI/NFPA 58 and 59 prevail (192.11(c)). However, this primacy provision does not excuse operators from following Part 192 requirements. For instance, when ANSI/NFPA 58 or 59 (2004) does not address a specific subject, then no conflict has occurred and the operator must follow Part 192 requirements.

At the time the primacy provision was added to the regulations in 1996, the standards took advantage of more current petroleum gas transportation technology and safety practices. In a July 22, 2009, (74 FR 36139) Notice of Proposed Rulemaking (NPRM), PHMSA proposed changing this primacy provision. PHMSA proposed changing this provision because the new NFPA standards issued in 2008 had many conflicts with Part 192 and PHMSA had noticed that operators were misinterpreting § 192.11(c). In response to the NPRM, commenters objected to the change suggesting it would result in unanticipated safety consequences. PHMSA did not take any action at the final rule stage but in the future, PHMSA may undertake a rulemaking to address this issue. This Advisory Bulletin serves to remind owners and operators of petroleum gas systems that they must continue to comply with certain requirements of Part 192.

II. Advisory Bulletin (ADB–2013–03)

To: Owners and Operators of LPG and Utility LP-Gas Plants.

Subject: Applicability of Part 192 to Owners and Operators of LPG and Utility LP-Gas Plants.

Advisory: When ANSI/NFPA 58 or 59 (2004) does not address a specific subject, then a conflict has not occurred and the operator must follow Part 192 requirements. Part 192 covers areas that are not addressed in ANSI/NFPA 58 or 59 (2004). These areas include:

- Inspection requirements for distribution mains (§§ 192.305 and 192.307).
- Backfill requirements for installing pipe in a ditch (§ 192.319).
- Underground pipe clearance requirements (§ 192.325).
- Valve requirements for service lines (§§ 192.363 and 192.365).
- Continuing surveillance (§ 192.613).
- Public awareness (§ 192.616).
- Operator qualification (Subpart N)
- Distribution Pipeline Integrity Management (Subpart P).

While not intended to be an exhaustive list, the following table highlights various requirements of Part 192 that are not addressed by ANSI/NFPA 58 and 59 (2004). Because ANSI/NPFA 58 and 59 (2004) do not have specific language on these topics, there is no conflict and therefore, Part 192 applies in these areas.

APPLICABLE SECTIONS OF PART 192 IN ADDITION TO THE REQUIREMENTS OF NFPA 58 AND 59 (2004)

Section	Title
Subpart G—General Construction Requirements for Transmission Lines and Mains	
192.305	Inspection: General.
192.307	Inspection of materials.
192.319	Installation of pipe in a ditch.
192.323	Casing.
192.325	Underground clearance.
Subpart H—Customer Meters, Service Regulators, and Service Lines	
192.363	Service lines: Valve requirements.
192.365	Service lines: Location of valves.
Subpart L—Operations	
192.613	Continuing Surveillance.
192.614	Damage Prevention Program.
192.615	Emergency Plans.
192.616	Public Awareness.
Subpart N—Qualification of Pipeline Personnel	
The entire Part 192 subpart would apply with the exception of § 192.805(h). NFPA 58 and 59 do not address any of the operator qualification and testing requirements. Therefore, owners and operators of LPG and Utility LP-Gas Plants would be required to meet the training requirements under the NFPA standard and the operator qualification and testing requirements under Part 192.	
Subpart P—Distribution Pipeline Integrity Management (IM)	
This Part 192 subpart would apply in its entirety; NFPA 58 does not address any requirements of this subpart.	

Issued in Washington, DC, on October 25, 2013.

Alan K. Mayberry,

Deputy Associate Administrator for Policy and Programs.

[FR Doc. 2013–25837 Filed 10–30–13; 8:45 am]

BILLING CODE 4910–60–P

DEPARTMENT OF TRANSPORTATION

Pipeline and Hazardous Materials Safety Administration

[Docket No. PHMSA–2010–0041]

Pipeline Safety: Request for Special Permit

AGENCY: Pipeline and Hazardous Materials Safety Administration (PHMSA); DOT.

ACTION: Notice.

SUMMARY: Pursuant to the Federal pipeline safety laws, PHMSA is publishing this notice of a special permit request received from a pipeline operator seeking relief from compliance with certain requirements in the Federal pipeline safety regulations. This notice seeks public comments on this request, including comments on any safety or environmental impacts. At the conclusion of the 30-day comment period, PHMSA will evaluate the request and determine whether to grant or deny a special permit.

DATES: Submit any comments regarding this special permit request by December 2, 2013.

ADDRESSES: Comments should reference the docket number for the specific special permit request and may be submitted in the following ways:

- *E-Gov Web site: http://www.Regulations.gov.* This site allows the public to enter comments on any **Federal Register** notice issued by any agency.
- *Fax:* 1–202–493–2251.
- *Mail:* Docket Management System: U.S. Department of Transportation, Docket Operations, M–30, West Building Ground Floor, Room W12–140, 1200 New Jersey Avenue SE., Washington, DC 20590.
- *Hand Delivery:* Docket Management System: U.S. Department of Transportation, Docket Operations, M–30, West Building Ground Floor, Room W12–140, 1200 New Jersey Avenue SE., Washington, DC 20590 between 9:00 a.m. and 5:00 p.m., Monday through Friday, except Federal holidays.

Instructions: You should identify the docket number for the special permit request you are commenting on at the beginning of your comments. If you submit your comments by mail, please submit two copies. To receive confirmation that PHMSA has received your comments, please include a self-addressed stamped postcard. Internet users may submit comments at *http://www.Regulations.gov.*

Note: Comments are posted without changes or edits to *http://www.Regulations.gov,* including any personal information provided. There is a privacy statement published on *http://www.Regulations.gov.*

FOR FURTHER INFORMATION CONTACT:

General: Kay McIver by telephone at 202–366–0113, or email at *kay.mciver@dot.gov.*

Technical: Steve Nanney by telephone at 713–272–2855, or email at *Steve.Nanney@dot.gov.*

SUPPLEMENTARY INFORMATION: PHMSA has received a request for a special permit from a pipeline operator seeking relief from compliance with certain pipeline safety regulations. The request includes a technical analysis provided by the operator. The request has been filed at *www.Regulations.gov* and assigned a docket number. We invite interested persons to participate by reviewing this special permit request at *http://www.Regulations.gov,* and by submitting written comments, data or other views. Please include any comments on potential environmental impacts that may result if this special permit is granted.

Before acting on this special permit request, PHMSA will evaluate all comments received on or before the comments closing date. Comments will be evaluated after this date if it is possible to do so without incurring additional expense or delay. PHMSA will consider each relevant comment we receive in making our decision to grant or deny a request.

PHMSA has received the following special permit request:

Docket No.	Requester	Regulation(s) affected	Nature of special permit
PHMSA–2010–0041	Williams Gas Pipeline Company, LLC (WGP).	49 CFR 192.150	To authorize the extension of a special permit issued to WGP on June 10, 2011, from its current expiration date of June 10, 2014 to December 31, 2014. PHMSA issued the June 10, 2011 special permit to WGP to waive compliance from Federal Regulations in 49 CFR 192.150 for one (1) segment of natural gas transmission pipeline, the Transcontinental Gas Pipe Line (Transco) Mainline ''A'' located in Chester County, Pennsylvania. The Federal pipeline safety regulations in 49 CFR 192.150 require that new transmission pipelines or replacement components of a transmission line be designed and constructed to accommodate the passage of instrumented internal inspection devices. This includes the replacement of line pipe, valves, fittings, or other pipeline components. The current configuration of the pipeline does not allow passage of commercially available internal inspection devices and, as a result, the pipeline is not in compliance with PHMSA regulations. The special permit would allow WGP to replace an approximate 2,100-foot segment of 30-inch pipeline with a 42-inch diameter pipeline at the Brandywine Creek, in Chester County, Pennsylvania. The 42-inch replacement pipeline would accommodate internal inspection devices.

Docket No.	Requester	Regulation(s) affected	Nature of special permit
			On August 8, 2012, WGP submitted an application to the Federal Energy Regulatory Committee (FERC) for a Certificate of Public Convenience and Necessity. WGP experienced delays during this project with approvals from FERC and the Pennsylvania Department of Environmental Protection (PADEP). FERC issued the requested certificate on July 18, 2013. On August 8, 2013, PADEP granted WGP an extension valid through December 31, 2015. With the other extensions in place WGP requested that PHMSA extend its special permit date to December 31, 2014. PHMSA's extension would allow the revised construction project schedule to begin on March 3, 2014, with a targeted completion date of December 31, 2014.

Authority: 49 U.S.C. 60118(c)(1) and 49 CFR 1.53.

Issued in Washington, DC, on October 25, 2013.

Alan K. Mayberry,

Deputy Associate Administrator for Policy and Programs.

[FR Doc. 2013–25838 Filed 10–30–13; 8:45 am]

BILLING CODE 4910–60–P

DEPARTMENT OF THE TREASURY

Submission for OMB Review; Comment Request

October 28, 2013.

The Department of the Treasury will submit the following information collection request to the Office of Management and Budget (OMB) for review and clearance in accordance with the Paperwork Reduction Act of 1995, Public Law 104–13, on or after the date of publication of this notice.

DATES: Comments should be received on or before December 2, 2013 to be assured of consideration.

ADDRESSES: Send comments regarding the burden estimate, or any other aspect of the information collection, including suggestions for reducing the burden, to (1) Office of Information and Regulatory Affairs, Office of Management and Budget, Attention: Desk Officer for Treasury, New Executive Office Building, Room 10235, Washington, DC 20503, or email at *OIRA_Submission@OMB.EOP.gov* and (2) Treasury PRA Clearance Officer, 1750 Pennsylvania Ave. NW., Suite 8141–D, Washington, DC 20220, or email at *PRA@treasury.gov.*

FOR FURTHER INFORMATION CONTACT: Copies of the submission(s) may be obtained by calling (202) 622–1295, email at *PRA@treasury.gov,* or the entire information collection request may be found at *www.reginfo.gov.*

Alcohol and Tobacco Tax and Trade Bureau (TTB)

OMB Number: 1513–0005.

Type of Review: Revision of a currently approved collection.

Title: Letterhead Applications and Notices Filed by Brewers TTB REC 5130/2 and Brewer's Notice TTB F 5130.10.

Form: TTB F 5130.10.

Abstract: The Internal Revenue Code requires brewers to file a notice of intent to operate a brewery. TTB F 5130.10 is similar to a permit and, when approved by TTB, is a brewer's authorization to operate. Letterhead applications and notices are necessary to identify brewery activities so that TTB may ensure that proposed operations do not jeopardize Federal revenues.

Affected Public: Private sector: Businesses or other for-profits.

Estimated Annual Burden Hours: 22,305.

Dawn D. Wolfgang,

Treasury PRA Clearance Officer.

[FR Doc. 2013–25925 Filed 10–30–13; 8:45 am]

BILLING CODE 4810–25–P

DEPARTMENT OF THE TREASURY

Fiscal Service

Notice of Rate To Be Used for Federal Debt Collection, and Discount and Rebate Evaluation

AGENCY: Bureau of the Fiscal Service, Treasury.

ACTION: Notice of rate to be used for Federal debt collection, and discount and rebate evaluation.

SUMMARY: The Secretary of the Treasury is responsible for computing and publishing the percentage rate that is to be used in assessing interest charges for outstanding debts owed to the Government (The Debt Collection Act of 1982, as amended (codified at 31 U.S.C. 3717)). This rate is also to be used by agencies as a comparison point in evaluating the cost-effectiveness of a cash discount. In addition, this rate is to be used in determining when agencies should pay purchase card invoices when the card issuer offers a rebate (5 CFR 1315.8). Notice is hereby given that the applicable rate is for calendar year 2014 is 1.00 percent.

DATES: January 1, 2014 through December 31, 2014.

FOR FURTHER INFORMATION CONTACT: E-Commerce Division, Bureau of the Fiscal Service, Department of the Treasury, 401 14th Street SW., Washington, DC 20227 (Telephone: 202–874–9428).

SUPPLEMENTARY INFORMATION: The rate reflects the current value of funds to the Treasury for use in connection with Federal Cash Management systems and is based on investment rates set for purposes of Public Law 95–147, 91 Stat. 1227. Computed each year by averaging Treasury Tax and Loan (TT&L) investment rates for the 12-month period ending every September 30, rounded to the nearest whole percentage, for applicability effective each January 1. Quarterly revisions will be made if the annual average, on a moving basis, changes by 2 percentage points. The rate for calendar year 2014 reflects the average investment rates for the 12-month period that ended September 30, 2013.

Dated: October 23, 2013.

John B. Hill,

Assistant Commissioner, Payment Management and Chief Disbursing Officer.

[FR Doc. 2013–25707 Filed 10–30–13; 8:45 am]

BILLING CODE 4810–35–M

DEPARTMENT OF THE TREASURY

Community Development Financial Institutions Fund

Notice of Funds Availability (NOFA) Inviting Applications for the Community Development Financial Institutions Program (CDFI Program) FY 2014 Funding Round (FY 2014 Funding Round)

Announcement Type: Announcement of funding opportunity.

Catalog of Federal Domestic Assistance (CFDA) Number: 21.020.

DATES: Applications for Financial Assistance (FA) or Technical Assistance (TA) awards through the CDFI Program FY 2014 Funding Round must be received by midnight, Eastern Time (ET), December 23, 2013.

Executive Summary: Subject to funding availability, this NOFA is issued in connection with the CDFI Program FY 2014 Funding Round, administered by the Community Development Financial Institutions Fund (CDFI Fund).

I. Funding Opportunity Description

A. *Award Requirements:* Subject to funding availability, the CDFI Fund makes FA awards and TA grants through the CDFI Program to entities that meet the requirements set forth in this NOFA. FA awards will be made to Certified CDFIs that meet the FA requirements; TA grants will be made to Certifiable or Emerging CDFIs, as defined in Table 5 of this NOFA, or Certified CDFIs that meet the SECA criteria in Table 3 of this NOFA but have not received FA awards after the FY 2008 funding round. In FY 2014, the CDFI Fund will also make FA awards for Healthy Food Financing Initiative (HFFI–FA) activities to Certified CDFIs that meet HFFI–FA requirements.

B. *Program Regulations:* The regulations governing the CDFI Program are found at 12 CFR Parts 1805 and 1815 (the Regulations) and provide guidance on evaluation criteria and other requirements. Details regarding Application content requirements are found in the Application and related materials. Capitalized terms are defined in this NOFA, the Regulations, or the Application. The CDFI Fund encourages Applicants to review the Regulations in addition to this NOFA.

C. The CDFI Fund reserves the right to fund, in whole or in part, any, all, or none of the Applications submitted in response to this NOFA. The CDFI Fund also reserves the right to reallocate funds from the amount that is anticipated to be available through this NOFA to other CDFI Fund programs, particularly if the CDFI Fund determines that the number of awards made through this NOFA is fewer than projected.

D. *Coordination with Broader Community Development Strategies:* Consistent with Federal efforts to promote community revitalization, it is important for communities to develop a comprehensive neighborhood revitalization strategy that addresses neighborhood assets essential to transforming distressed neighborhoods into healthy and vibrant communities. Neighborhood transformation can best occur when comprehensive neighborhood revitalization plans embrace the coordinated use of programs and resources that address the interrelated needs within a community. Although not a requirement for participating in the CDFI Program, the Federal government believes that a CDFI will be most successful when it is part of, and contributes to, an area's broader neighborhood revitalization strategy.

II. Award Information

A. Funding Availability

1. *FY 2014 Funding Round:* Subject to funding availability, the CDFI Fund expects to award, through this NOFA, approximately $179 million as indicated in the following table:

TABLE 1—FY 2014 FUNDING ROUND—CATEGORY AMOUNTS

Funding categories	Proposed total amount to be awarded (millions of dollars)
Category I/SECA	15
Category II/Core	126
TA	3
HFFI–FA	35
Total	179

The CDFI Fund reserves the right to award more or less than the amounts cited above in each category in the FY 2014 Funding Round, based upon available funding and other applicable factors.

In the recent past, Congress mandated that at least ten percent of the CDFI Program's appropriations be directed to counties that meet certain criteria for ''persistent poverty.'' This requirement continues under this NOFA. As a result, the CDFI Fund invites Applicants to indicate their level of participation in persistent poverty counties in their FY 2014 applications.

2. *Funding Availability for the FY 2014 Funding Round:* Funds for the FY 2014 Funding Round have not yet been appropriated; if Congress does not appropriate funds for the CDFI Program, there will not be a FY 2014 Funding Round. If funds are appropriated, the amount of such funds may be greater or less than the amounts set forth above. CDFIs that quality for the Native American CDFI Assistance (NACA) Program are encouraged to apply for CDFI Program funds through this NOFA in case no funds are appropriated for the NACA Program.

All awards made through this NOFA must be used to support the Applicant's activities. Awards cannot be used to support the activities of, or otherwise be passed through, transferred, or co-awarded to, third-party entities, whether Affiliates, Subsidiaries, or others. The entity that is to carry out the responsibilities of the award and deploy the award funds (the Awardee) must be the entity that applies for the award. In the case where a CDFI bank-holding company Applicant intends to deploy its FA award through its 100 percent wholly-owned CDFI subsidiary bank, the Application must be made at the CDFI bank-holding company level and reflect consolidated activities and financial performance. Authorized representatives of both the holding company and the bank must certify that the information included in the Application represents that of the CDFI bank and that the award funds will be used to capitalize the CDFI bank for the activities outlined in the Application.

B. Types of Awards

An Applicant may submit an Application for a TA grant or an FA award, but not both. For purposes of this NOFA, ''FA awards'' include awards made using CDFI Program FA funds and awards made using HFFI–FA funds.

1. *FA Awards:*

FA awards provide flexible financial support to CDFIs so they may execute the organizational goals outlined in their Applications. FA awards can be used in the following five categories: (i) Financial Products; (ii) Financial Services; (iii) Development Services; (iv) Loan Loss Reserves; and (v) Capital Reserves, and can include up to 15 percent of the total award in Administrative Funds to carry out the

eligible uses. For purposes of this NOFA, the five categories mean:

TABLE 2—FIVE CATEGORIES OF FA

(i) Financial Products	Loans, grants, equity investments, and similar financing activities, including the purchase of loans that the Applicant originates and the provision of loan guarantees, in the Applicant's Target Market, or for related purposes that the CDFI Fund deems appropriate.
(ii) Financial Services	Checking and savings accounts, certified checks, automated teller machines services, deposit taking, remittances, safe deposit box services, and other similar services.
(iii) Development Services	Activities that promote community development and help the Applicant provide its Financial Products and Financial Services, including financial or credit counseling, housing and home-ownership counseling (pre- and post-), self-employment technical assistance, entrepreneurship training, and financial management skill-building.
(iv) Loan Loss Reserves	Funds set aside in the form of cash reserves, or through accounting-based accrual reserves, to cover losses on loans, accounts, and notes receivable made in the Target Market, or for related purposes that the CDFI Fund deems appropriate.
(v) Capital Reserves	Funds set aside as reserves to support the Applicant's ability to leverage other capital, for such purposes as increasing its net assets or serving the financing needs of its Target Market, or for related purposes that the CDFI Fund deems appropriate.

The CDFI Fund may provide FA awards in the form of equity investments (including secondary capital in the case of certain Insured Credit Unions), grants, loans, deposits, credit union shares, or any combination thereof. As described in this NOFA, FA Applicants must meet certain matching funds requirements; the form of the FA Applicant's matching funds will dictate the form of the FA award. The CDFI Fund reserves the right, in its sole discretion, to provide a FA award in an amount other than that which the Applicant requests; however, the award amount will not exceed the Applicant's award request as stated in its Application.

2. *HFFI–FA awards:*

The CDFI Fund expects to make HFFI–FA awards of up to $5 million to Certified CDFIs that complete and submit a CDFI/NACA Program Application and a HFFI–FA Supplemental Questionnaire. The HFFI–FA Supplemental Questionnaire must be submitted with the CDFI/NACA Program Application. The CDFI Fund reserves the right to make awards less than $5 million based upon the questionnaires received and the funds available. HFFI–FA awards will be provided as a supplement to FA awards; therefore, only those Applicants that have been selected to receive a FA award through the CDFI and NACA Programs FY 2014 Funding Rounds will be eligible to receive a HFFI–FA award. Such Applicants will be rated and scored separately based upon the HFFI–FA supplemental questionnaire responses. HFFI–FA Applicants will be rated, among other elements, on the extent of community need, the quality of their HFFI–FA strategy, and their capacity to execute that strategy. The CDFI Fund may, in its discretion, perform additional due diligence on Applicants for this initiative.

3. *TA Grants:*

(a) The CDFI Fund provides TA in the form of a grant and reserves the right, in its sole discretion, to provide a TA grant for amounts other than which the Applicant requests; however, the TA grant amount will not exceed the Applicant's request as stated in its Application and the applicable budget chart.

(b) TA eligible uses are: (i) Personnel/salary; (ii) personnel/fringe; (iii) professional services; (iv) travel; (v) training; and (vi) equipment. Please see the Application for details on TA uses. TA grants must be used to build the Applicant's capacity. An Applicant that is an Emerging CDFI and has not received a previous TA award will be rated, among other elements, on its plan to meet the requirements of a Certified CDFI within two years. An Applicant that is an Emerging CDFI and a prior TA awardee will be rated, among other elements, on its plan to meet the CDFI certification goal specified in its previous CDFI Program Assistance Agreement.

C. Assistance Agreement

All Awardees, prior to receiving award funds, must sign an Assistance Agreement, which contains the award's terms and conditions. For further information, see Section VI.A of this NOFA.

III. Eligibility Information

A. Eligible Applicants

The Regulations specify the eligibility requirements that each Applicant must meet in order to be eligible to apply for assistance under this NOFA. FA Applicants must be either a Certified CDFI or Certifiable CDFI as defined below in Table 5 and have submitted a certification application in accordance with the deadlines in this NOFA. TA Applicants must be Certifiable or Emerging CDFIs as defined in Table 5 or Certified CDFIs that meet the SECA criteria in Table 3 of this NOFA but have not received FA awards after the FY 2008 funding round.

1. *FA Applicant Categories:* FA Applicants must meet the criteria listed in Table 3. Applicants requesting FA funds in excess of the allowable amount for Category I will be classified as Category II Applicants, regardless of their total assets, years in operation, or prior CDFI Fund awards.

TABLE 3—FA APPLICANT CRITERIA

FA Applicant category	Applicant criteria	Applicant may apply for:
Category I/Small and/or Emerging CDFI Assistance (SECA).	(1) Is a Certified or Certifiable CDFI AND EITHER ..... (2) As of the end of the Applicant's most recent fiscal year end or September 30, 2013, has total assets as follows: • Insured Depository Institutions and Depository Institution Holding Companies: Up to $250 million • Insured Credit Unions: Up to $10 million • Venture capital funds: Up to $10 million • Other CDFIs: Up to $5 million or (3) Began operations* on or after January 1, 2010.	Up to and including $700,000 in FA funds and up to and including $5 million in FA funds through HFFI–FA.
Category II/Core	A Certified or Certifiable CDFI that meets all other eligibility requirements described in this NOFA.	Up to and including $2 million in FA funds; and up to and including $5 million in FA funds through HFFI–FA.

* "Began operations" is defined as the financing activity start date indicated in the Applicant's myCDFIFund account.

2. *TA Applicants:* TA Applicants must meet the following criteria:

TABLE 4—TA APPLICANT CRITERION

Applicant type	Criteria of applicant	Applicant can apply for:
TA	Certifiable or Emerging CDFIs or Certified CDFIs that meet the SECA criteria in Table 3 of this NOFA but have not received FA awards after the FY 2008 funding round.	Up to $125,000 for capacity-building activities.

3. *CDFI Certification Requirements:* For purposes of this NOFA, eligible FA Applicants include Certified/Certifiable CDFIs as defined in Table 5; eligible TA Applicants must be Certifiable or Emerging CDFIs, as defined in Table 5 or Certified CDFIs that meet the SECA criteria in Table 3 of this NOFA but have not received FA awards after the FY 2008 funding round. The CDFI Fund's Regulations require that CDFI Program FA awardees must be certified.

All Applicants must be certified or recertified as of June 1, 2014 or any date thereafter prior to the announcement of awards; Applicants that are in a cure period to remedy recertification deficiencies as of June 1, 2014 or any date thereafter prior to the announcement of awards will not be eligible for a FA award under this NOFA. Please see the CDFI Fund's Web site for additional information regarding recertification and cure periods at Frequently Asked Questions regarding CDFI Recertification at *http://www.cdfifund.gov/docs/2013/certification/Frequently%20Asked%20Questions%20Recert.pdf*.

TABLE 5—CDFI CERTIFICATION—REQUIREMENTS

Certified CDFI	An entity the CDFI Fund has officially notified that meets all CDFI certification requirements. A Certified Applicant must submit a Certification of Material Events form only if it has experienced a material event. A "material event" is an occurrence that affects an organization's strategic direction, mission, or business operation and, thereby, its status as a Certified CDFI and/or its compliance with the terms and conditions of an Assistance Agreement.
Certifiable CDFI	An entity that has submitted a Certification Application to the CDFI Fund demonstrating that it meets the CDFI certification requirements but for which the CDFI Fund has not yet officially certified the entity. If the CDFI Fund is unable to certify an Applicant and the Applicant is selected for a FA award, the CDFI Fund may, in its sole discretion, terminate the award commitment. The CDFI Fund will not enter into an Assistance Agreement or disburse FA award funds unless and until an Applicant is certified.
Emerging CDFI	A non-certified entity that demonstrates to the CDFI Fund that it has an acceptable plan to meet certification requirements by the end of its FY 2016, or another date that the CDFI Fund selects. Emerging CDFIs that have prior awards will be held to the certification date in their prior Assistance Agreements. Emerging CDFIs may only apply for TA grants; they are not eligible to apply for FA awards. Each Emerging CDFI selected to receive a TA grant will be required to become a Certified CDFI by a date specified in the Assistance Agreement.

4. *Limitation on Awards:* An Applicant may receive either an award through this NOFA or an award through the NACA Program FY 2014 NOFA, but not both. Although eligible Applicants can apply for the CDFI Program and the NACA Program, they will receive only one FY 2014 award.

B. Prior Awardees

Prior Awardees should note the following:

1. *$5 Million Funding Cap:* The CDFI Fund is currently prohibited from obligating more than $5 million in CDFI and NACA Program awards, in the aggregate, to any one organization and its Subsidiaries and Affiliates during any three-year period. In general, the

three-year period calculated for the cap extends back three years from the Effective Date of the Assistance Agreement between the Awardee and the CDFI Fund. However, for purposes of this NOFA, because the funding cap was waived for FY 2009, FY 2010, and FY 2011, the CDFI Fund will include awards in the cap calculation that were provided to an Applicant (or its Subsidiaries or Affiliates) beginning with the FY 2012 Funding Round, excluding FY 2012 HFFI–FA awards. The CDFI Fund will assess the $5 million funding cap applicability during the award selection phase.

Please see the following table for other prior Awardee requirements and considerations.

TABLE 6—PRIOR AWARDEE REQUIREMENTS AND CONSIDERATIONS

Prior awardee situation	Requirements and considerations
Failure to Meet Reporting Requirements	The CDFI Fund will not consider an Application submitted by an Applicant that is not current on reporting requirements in a previously executed agreement under any CDFI Fund program as of this NOFA's Application deadline. (Please note that the CDFI Fund's automated systems for receipt of reports submitted electronically typically acknowledge only a report's receipt. Such an acknowledgment does not verify nor otherwise represent that the report received was complete and therefore met reporting requirements.)
Pending Resolution of Noncompliance	The CDFI Fund will consider an Application pending full resolution of any noncompliance issues if the Applicant has: (i) Submitted reports demonstrating noncompliance with a previously executed agreement under any CDFI Fund program, and (ii) the CDFI Fund has yet to make a final determination as to whether the Applicant is in default of its previously executed agreement.
Default Status	The CDFI Fund will not consider an Application submitted by an Applicant that is in default of a previously executed agreement under any CDFI Fund program, at the time of the Application deadline: (i) If the CDFI Fund has made a determination that the Applicant is in default of the agreement and the default is final; (ii) the CDFI Fund has provided written notification of the final default determination to the Applicant; and (iii) the Application deadline is within a period of time specified in the written notification in which a new Application from the Applicant is prohibited.
Undisbursed Award Funds & Calculations (General).	The CDFI Fund will not consider an Application submitted by an Applicant that has undisbursed funds as defined below, as of the Application deadline. The CDFI Fund will include the combined undisbursed prior awards of the Applicant and its affiliated entities, including those in which the affiliated entity Controls the Applicant, is Controlled by the Applicant, or shares common management officials with the Applicant as the CDFI Fund determines. Undisbursed awards cannot exceed five percent of the total includable awards for the Applicant's Bank Enterprise Award (BEA) Program/CDFI/NACA awards, as of the Application deadline. (The total ''includable'' award amount is the total award amount from the relevant CDFI Fund program.) The ''undisbursed award funds'' calculation does not include award funds for: (i) Which the Awardee has submitted a full and complete disbursement request before the Application deadline; (ii) an award that has been terminated or de-obligated; or (iii) an award that does not have a fully executed agreement; and (iv) the tax credit allocation authority made available through the NMTC Program.
BEA Program Undisbursed Awards Calculations	For the BEA Program, undisbursed funds will include the Applicant's undisbursed awards three to five calendar years prior to the end of the calendar year of the Application deadline. For purposes of this NOFA, therefore, undisbursed awards made in FYs 2008, 2009, and 2010 will be included in the Applicant's undisbursed award amounts if the funds have not been disbursed as of the Application deadline.
CDFI Program Undisbursed Awards Calculations.	For the CDFI Program, undisbursed funds will be calculated by adding all undisbursed award amounts made to the Applicant two to five calendar years prior to the end of the calendar year of this NOFA. Therefore, undisbursed CDFI Program awards made in FYs 2008, 2009, 2010, and 2011 will be included in the undisbursed calculation as of the Application deadline. The CDFI Fund reserves the right to adjust the award amount based upon the amount of FY 2012 and FY 2013 awards that remain undisbursed.

2. *Contact the CDFI Fund:* Applicants that are prior CDFI Fund Awardees are advised to: (i) Comply with requirements specified in their executed agreements, and (ii) contact the CDFI Fund at least 10 business days prior to this NOFA's Application deadline to ensure necessary actions are underway for the disbursement or de-obligation of any prior outstanding award balance(s) as referenced above.

C. Matching Funds

1. *Matching Funds Requirements in General:*

FA Applicants must provide dollar-for-dollar non-Federal matching funds for every CDFI Program award dollar. The FY 2014 Continuing Resolution (CR) requires matching funds for Category II/Core FA and HFFI–FA Applicants only. The CR has waived the matching funds requirement for Category 1/SECA and NACA Applicants and matching funds are not required for TA Applicants. Matching funds must be comparable in form and value to the FA award. This means that Category II FA Applicants must show they have matching funds in-hand or firmly committed from non-Federal sources equal to the amount requested from the CDFI Fund. Applicants cannot use matching funds from a prior FA award under the CDFI Program or under another federal grant or award program to satisfy the matching funds requirement of this NOFA. If an Applicant seeks to use matching funds

from an organization that was a prior Awardee under the CDFI Program, the CDFI Fund will deem such funds as Federal funds, unless the funding entity establishes and the CDFI Fund agrees, that such funds do not consist, in whole or in part, of CDFI Program funds or other Federal funds. The CDFI Fund reserves the right to contact the matching funds source to discuss the matching funds and the documentation that the Applicant has provided. The CDFI Fund encourages Applicants to review the Regulations at 12 CFR 1805.500 et seq. and matching funds guidance materials on the CDFI Fund's Web site for further information.

2. The CDFI Fund will not consider any FA Applicant for an award that has no matching funds in-hand or firmly committed as of this NOFA's Application deadline. Specifically, FA Applicants must meet the following matching funds requirements:

(a) *Category II/Core Applicants:* A Category II/Core Applicant must demonstrate that it has eligible matching funds in-hand or firmly committed, as of January 1, 2012 and the Application due date, that is equal to no less than 50 percent of the amount requested. The CDFI Fund reserves the right to rescind all or a portion of a FA award and re-allocate the rescinded award amount to other qualified Applicant(s), if an Applicant fails to obtain in-hand 100 percent of the required matching funds by January 15, 2015 (with required documentation of such receipt received by the CDFI Fund not later than January 31, 2015). The CDFI Fund may grant an extension of such matching funds deadline for specific Applicants selected to receive FA, if the CDFI Fund deems it appropriate.

(b) *HFFI–FA Applicants:* All HFFI–FA Applicants must demonstrate that they have eligible matching funds equal to no less than 75 percent of the HFFI–FA amount requested in-hand or firmly committed on or after January 1, 2012, and on or before the Application deadline. (This requirement is not waived for Category I/SECA and NACA Applicants.) The CDFI Fund reserves the right to rescind all or a portion of an HFFI–FA award and re-allocate the rescinded award amount to other qualified Applicant(s), if an Applicant fails to obtain in-hand 100 percent of the required matching funds by January 15, 2015 (with required documentation of such receipt received by the CDFI Fund not later than January 31, 2015). The CDFI Fund may grant an extension of such matching funds deadline for specific Applicants selected to receive HFFI–FA awards, if the CDFI Fund deems it appropriate.

3. *Matching Funds Terms Defined; Required Documentation*

TABLE 7—MATCHING FUNDS DEFINITIONS

Type of matching funds	Definition
Matching funds ''in-hand.''	The Applicant has actually received disbursement of the matching funds and provides acceptable written documentation, showing the source, form, and amount of the matching funds (i.e., grant, loan, deposit, and equity investment). Applicants must provide copies of the following documentation depending on the type of award being requested: (i) Loans—the loan agreement and promissory note; (ii) grant—the grant letter or agreement for all grants of $50,000 or more; (iii) equity investment—the stock certificate and any related shareholder agreement; (iv) retained earnings—audits or call reports from regulating entity. The Applicant must also provide acceptable documentation that demonstrates receipt of the matching funds, such as a copy of a check or a wire transfer statement.
Matching funds ''firmly committed.''	The Applicant has entered into or received a legally binding commitment from the matching funds source showing the match funds will be disbursed to the Applicant. The Applicant must also provide acceptable written documentation showing the source, form, and amount of the firm commitment (and, in the case of a loan, the terms thereof), as well as the anticipated disbursement date of the committed funds.

4. *Matching Loan Requests:* The CDFI Fund will match eligible loans provided as non-Federal matching funds with a standard loan product. The standard loan product will be a 13-year loan with semi-annual interest-only payments due in years one through ten, and fully amortizing payments due each year in years eleven through thirteen. The interest rate is fixed for the term of the note at 1.95 percent, which is based on the U.S. Department of the Treasury's 10-year Treasury note. In order for a loan to qualify to be matched by the standard loan product, the loan must have a minimum of a 3-year term. Loans presented as matching funds with less than a 3- year term will not qualify as eligible match.

5. *Ineligible Matching Funds:* If the CDFI Fund determines that any portion of the Applicant's matching funds is ineligible, the CDFI Fund, in its sole discretion, may permit the Applicant to offer alternative matching funds as a substitute for the ineligible matching funds. In such instances: (i) The Applicant must provide acceptable alternative matching funds documentation within a written specified period of time, no less than two business days, and (ii) the alternative matching funds documentation will not increase the total amount of FA the Applicant requested.

6. *Retained Earnings:* The Regulations allow an Applicant to use retained earnings to serve as matching funds for a FA award. The CDFI Fund will calculate retained earnings eligible to be used as matching funds in an amount equal to: (i) The increase in retained earnings that has occurred over the Applicant's most recent fiscal year, adjusted to remove revenue and expenses derived from federal sources and matching funds previously used for an award; or (ii) the annual average of such increases that has occurred over the Applicant's three most recent fiscal years, adjusted to remove revenue and expenses derived from federal sources and matching funds previously used for an award.

7. *Special Rule for Insured Credit Unions:* The Regulations allow an Insured Credit Union to use retained earnings to serve as matching funds for a FA award. The CDFI Fund will calculate retained earnings for Insured Credit Unions in an amount equal to: (i) The increase in retained earnings that occurred over the Applicant's most recent fiscal year, adjusted to remove revenue from federal Sources and matching funds previously used for an award; (ii) the annual average of such increases that has occurred over the Applicant's three most recent fiscal years, adjusted to remove revenue from federal sources and matching funds previously used for an award; or (iii) the entire retained earnings that have been accumulated since the inception of the Applicant, as provided in the Regulations. If option (iii) is used, the Applicant must increase its member

and/or non-member shares and/or total loans outstanding by an amount equal to the amount of retained earnings committed as matching funds. This increase will be measured from June 30, 2014 and must occur by the end of the Awardee's first performance period, as set forth in its Assistance Agreement, and will be based on amounts reported in the Applicant's NCUA Form 5300 Call Report. The CDFI Fund will assess the likelihood of this increase during the Application review process. An award will not be made to any Applicant that has not demonstrated in the relevant financial statements or NCUA call report that it has increased shares and/or loans by at least 25 percent of the requested FA award amount between December 31, 2012, and December 31, 2013. The match will not be considered in-hand until the Awardee has increased its member and/or non-member shares or total loans outstanding within the time period specified.

IV. Application and Submission Information

A. Application Submission

Applicants must submit Applications electronically through Grants.gov. The CDFI Fund will not accept Applications through myCDFIFund accounts nor will Applications be accepted via email, mail, facsimile, or other forms of communication, except in circumstances approved by the CDFI Fund beforehand. If Applicants submit multiple Applications, the CDFI Fund will only review the last Application submitted; all other Applications will be considered ineligible.

B. Grants.gov

In compliance with Public Law 106–107 and Section 5(a) of the Federal Financial Assistance Management Improvement Act, the CDFI Fund is required to accept Applications submitted through the Grants.gov electronic system. The CDFI Fund strongly recommends Applicants start the registration process as soon as possible and visit *www.grants.gov* immediately. Applicants that have used Grants.gov in the past must verify that their registration is current and active. New Applicants must properly register, which may take several weeks to complete. Pursuant to OMB guidance (68 FR 38402), each Applicant must provide, as part of its Application submission, a Dun and Bradstreet Universal Numbering System (DUNS) number. In addition, each Application must include a valid and current Employer Identification Number (EIN). An electronic Application that does not include a DUNS number and an EIN is incomplete and may not be transmitted to the CDFI Fund from Grants.gov. As a result, Applicants without a DUNS number and EIN should allow sufficient time for the IRS and/or Dun and Bradstreet to respond to inquiries and/or requests for identification numbers. The CDFI Fund will not consider Applicants that fail to properly register in Grants.gov or to confirm they are properly registered and as a result, are unable to submit their Applications before the deadline. Applicants are reminded that the CDFI Fund does not maintain the Grants.gov registration or submittal process so Applicants must contact Grants.gov directly for issues related to that aspect of the Application submission process. Please see the following link for information on getting started on Grants.gov: *http://grants.gov/applicants/organization_registration.jsp.*

C. System for Award Management (SAM)

Any entity applying for Federal grants or other forms of Federal financial assistance through Grants.gov, must be registered in SAM. Applicants must verify that their registration is current and active in SAM. New Applicants must properly register and wait for the account to be activated, which does not occur simultaneously and may take weeks to complete for Applicants that have an EIN. If an Applicant does not have an EIN, the Applicant should allow several weeks for obtaining the information from the IRS when requesting the EIN via phone, fax, mail or Internet. The CDFI Fund will not consider Applicants that fail to properly register or activate their account in SAM and as a result, are unable to submit their Applications before the deadline. The CDFI Fund does not maintain the SAM registration process, so Applicants must contact SAM directly for issues related to registration. The CDFI Fund strongly encourages Applicants to ensure that their SAM registration is updated and that their accounts are active. For information regarding SAM, please visit *https://www.sam.gov/portal/public/SAM/.*

D. myCDFIFund Accounts

myCDFIFund is the CDFI Fund's primary means of communication with Applicants. Every Applicant is responsible for ensuring its myCDFIFund account is up-to-date at all times. All Applicants must register as an organization and as a user with myCDFIFund before the Application deadline. An Applicant that fails to properly register and update its myCDFIFund account may miss important communication with the CDFI Fund that could impact its Application. For more information on myCDFIFund, please see the ''Frequently Asked Questions'' link posted at *https://www.cdfifund.gov/myCDFI/Help/Help.asp.*

E. Application Content Requirements

The Application and related documents can be found on the Grants.gov and the CDFI Fund's Web sites. The CDFI Fund anticipates posting the Application and related documents to the CDFI Fund's Web site on the same day that the NOFA is released or shortly thereafter. Once an Application is submitted to Grants.gov, the Applicant will not be allowed to change any element of the Application. The CDFI Fund, however, may contact the Applicant to clarify or confirm Application information.

F. Paperwork Reduction Act

Under the Paperwork Reduction Act (44 U.S.C. chapter 35), an agency may not conduct or sponsor a collection of information, and an individual is not required to respond to a collection of information, unless it displays a valid OMB control number. Pursuant to the Paperwork Reduction Act, the CDFI Program funding Application has been assigned the following control number: 1559–0021.

G. Application Deadlines

1. Please see the following table for critical deadlines that are relevant to the FY 2014 Funding Round.

TABLE 8—FY 2014 FUNDING ROUND APPLICATION CRITICAL DATES

Description	Date due	Time (EST)
Last day to contact Program staff	December 18, 2013	5:00 p.m.
CDFI Program Application for Assistance	December 23, 2013	12 midnight.
CDFI Certification Applications	November 22, 2013	5:00 p.m.

TABLE 8—FY 2014 FUNDING ROUND APPLICATION CRITICAL DATES—Continued

Description	Date due	Time (EST)
Certification of Material Events Form—only for Applicants that have had a Material Event.	November 22, 2013	5:00 p.m.

2. *Late Delivery:* The CDFI Fund will not accept an Application delivered after the Application deadline or any portion of an Application that is delivered after the Application deadline. Applicants are responsible for submitting their Applications on time through Grants.gov. The CDFI Fund will not grant exceptions or waivers. Any Application that is deemed ineligible or rejected will not be returned to the Applicant.

H. Intergovernmental Review

Not applicable.

I. Funding Restrictions

For allowable uses of FA proceeds, please see the Regulations at 12 CFR 1805.301.

V. Application Review Information

A. Format

Applicants must complete, and the CDFI Fund will only accept, the Application as provided in Grants.gov and the CDFI Fund's Web site. The FY 2014 Application is a compilation of multiple mandatory documents including a: (1) A PDF fillable applicant intake form; (2) a Microsoft Excel Workbook; (3) a Microsoft Word Narrative template; and (4) other mandatory attachments. (Applicants must use the Microsoft Word Narrative template the CDFI Fund provides; alternative templates/formats will not be scored.) Applicants should not submit information that has not been specifically requested in this NOFA or the Application. Applicants should not submit documents such as strategic plans or market studies unless the CDFI Fund has specifically requested such documents in the Application.

B. Review and Selection Process

1. *Eligibility and Completeness Review:* The CDFI Fund will review each Application to determine whether it is complete and the Applicant meets the eligibility requirements described in Section III of this NOFA. An incomplete Application or one that does not meet eligibility requirements will be rejected.

2. *Substantive Review:* If the Applicant has submitted a complete and eligible Application, the CDFI Fund will conduct a substantive review in accordance with the criteria and procedures described in the Regulations, this NOFA, and the Application guidance. The CDFI Fund reserves the right to contact the Applicant by telephone, email, or mail for the sole purpose of clarifying or confirming Application information. If contacted, the Applicant must respond within the CDFI Fund's time parameters or run the risk of its Application being rejected.

3. *Application Scoring and Award Selection (FA and TA Applicants):*

(a) *Application Scoring:* The CDFI Fund will evaluate each Application on the criteria categories and the scoring scale described in the Application. An Applicant must receive a minimum aggregate score in order to be considered for an award. The CDFI Fund will score each part as indicated in the following table:

TABLE 9—APPLICATION SCORING CRITERIA

Comprehensive Business Plan (CBP) sections	FA applicants	TA applicants
Executive Summary	Not Scored	Not Scored.
Purpose/Proposal	10 points	15 points.
Products	10 points	10 points.
Policies	10 points	10 points.
People	10 points	15 points.
Partnerships	10 points	5 points.
Performance	40 points	30 points.
Projections	10 points	15 points.
Total Point	100 points	100 points.

Applicants whose activities are part of a broader neighborhood revitalization strategy and/or that target marginalized or isolated populations will be scored more favorably in the section of the Application pertaining to Partnerships.

(b) *Evaluating Prior Award Performance:* The CDFI Fund will deduct points, in accordance with the following table, from Applicants who have received prior assistance under any CDFI Fund program:

TABLE 10—POINT DEDUCTIONS

Issues	Descriptions
Failure to Meet Agreement Requirements	The CDFI Fund will deduct points from Applicants who have not met requirements in previously executed agreements under any CDFI Fund program including compliance reports due during the previous 24 months prior to the Application deadline date.
Failure to Provide Timely Loan Payments	The CDFI Fund will deduct points from Applicants who have failed to submit timely loan payments to the CDFI Fund within the 24 months prior to the Application deadline (if applicable).

TABLE 10—POINT DEDUCTIONS—Continued

Issues	Descriptions
Incurred De-obligations	The CDFI Fund will deduct points from Applicants if funds were de-obligated for FA awards issued in FY 2010, 2011 or 2012 and if the de-obligation occurred within the 12 months prior to the Application deadline. Point deductions in this funding round for a de-obligation of a prior award will not be counted against future FA Applications.
Determination of Discrimination	The CDFI Fund will deduct points from Applicants if proceedings have been instituted against them in, by, or before any court, governmental agency, or administrative body and a final determination within the last three years indicates the Applicant has discriminated on the basis of race, color, national origin, disability, age, marital status, receipt of income from public assistance, religion, or sex.

(c) *Award Selection:* The CDFI Fund will make its final award selections based on the Applicants' scores; ranked from highest to lowest, and the amount of funds available. In the case of tied scores, Applicants will be ranked first according to each Performance score; then the Purpose score. TA Applicants, Category I, and Category II Applicants will be grouped and ranked separately. In addition, the CDFI Fund may consider the institutional and geographic diversity of Applicants when making its funding decisions.

4. *Insured CDFIs:* In the case of Insured Depository Institutions and Insured Credit Unions, the CDFI Fund will consider information provided by, and views of, the Appropriate Federal Banking Agencies. If the Applicant is a CDFI bank holding company, the CDFI Fund will consider information provided by the Appropriate Federal Banking Agencies of the CDFI bank holding company and the CDFI bank that will implement the award. Throughout the award review process, the CDFI Fund will consult with the Appropriate Federal Banking Agency about the Applicant's financial safety and soundness. If the Appropriate Federal Banking Agency identifies safety and soundness concerns, the CDFI Fund will assess whether the concerns cause or will cause the Applicant to be incapable of undertaking the activities for which funding has been requested. If it is determined the Applicant is incapable of meeting its obligations, the CDFI Fund reserves the right to withdraw the award decision. The CDFI Fund also reserves the right to require Insured CDFI Applicants to improve safety and soundness conditions prior to receiving an award disbursement. In addition, the CDFI Fund will take into consideration Community Reinvestment Act assessments of Insured Depository Institutions and/or their Affiliates.

5. *Award Notification:* Each Applicant will be informed of the CDFI Fund's award decision through a notification in the Applicant's myCDFIFund account. This includes notification to Applicants that have not been selected for an award if the decision is based on reasons other than completeness or eligibility. Applicants that have not been selected for an award will receive a debriefing notice in their myCDFIFund account.

6. *Application Rejection:* The CDFI Fund reserves the right to reject an Application if information (including administrative errors) comes to the CDFI Fund's attention that either adversely affects an Applicant's eligibility for an award; adversely affects the Awardee's certification as a CDFI (to the extent that the Award is conditional upon CDFI certification); adversely affects the CDFI Fund's evaluation or scoring of an Application; or indicates fraud or mismanagement on the Applicant's part. If the CDFI Fund determines any portion of the Application is incorrect in a material respect, it reserves the right, in its sole discretion, to reject it. The CDFI Fund reserves the right to change its eligibility and evaluation criteria and procedures, if the CDFI Fund deems it appropriate. If the changes materially affect the CDFI Fund's award decisions, it will provide information about the changes through its Web site. The CDFI Fund's award decisions are final and there is no right to appeal the decisions.

VI. Award Administration Information

A. Assistance Agreement

Each Applicant selected to receive an award must enter into an Assistance Agreement with the CDFI Fund in order to receive a disbursement(s). The Assistance Agreement will set forth the award's terms and conditions, including but not be limited to the award: (i) Amount; (ii) type; (iii) uses; (iv) targeted market or activities; (v) performance goals and measures; and (vi) reporting requirements. FA Assistance Agreements will usually have three-year performance periods; TA Assistance Agreements will usually have two-year performance periods. All FA and TA Awardees that are not Insured CDFIs will be required to provide the CDFI Fund with a certificate of good standing from the secretary of state for the Awardee's state of incorporation. This certificate can often be acquired online on the secretary of state Web site for the Awardee's state of incorporation and must generally be dated within 270 days from the date the Awardee executes the Assistance Agreement. Due to potential backlogs in state government offices, Applicants are advised to submit requests for certificates of good standing at the time that they submit their Applications.

If prior to entering into an Assistance Agreement, information (including administrative error) comes to the CDFI Fund's attention that adversely affects the Awardee's: (i) Eligibility for an award; (ii) certification as a CDFI (to the extent that the Award is conditional upon CDFI certification); or (iii) Application evaluation as conducted by the CDFI Fund; or (iv) indicates fraud or mismanagement on the Awardee's part, the CDFI Fund may, in its discretion and without advance notice to the Awardee, terminate the award or take such other actions as it deems appropriate. The CDFI Fund reserves the right, in its sole discretion, to rescind an award if the Awardee fails to return the Assistance Agreement, signed by the authorized representative of the Awardee, and/or provide the CDFI Fund with any other requested documentation, within the CDFI Fund's deadlines.

In addition, the CDFI Fund, reserves the right in its sole discretion, to terminate and rescind the Assistance Agreement and the award made under this NOFA pending the criteria described in the following table:

TABLE 11—REQUIREMENTS PRIOR EXECUTING AN ASSISTANCE AGREEMENT

Requirement	Criteria
Failure to Meet Reporting Requirements.	If an Awardee has received prior assistance under any CDFI Fund program and is not current with the reporting requirements in the previously executed agreement(s), the CDFI Fund can delay entering into an Assistance Agreement until reporting requirement are met. If such an Awardee is unable to meet the requirement within the timeframe specified, the CDFI Fund may terminate and rescind the Assistance Agreement and the award made under this NOFA. (Please note that the automated systems the CDFI Fund uses for receipt of reports submitted electronically typically acknowledges only a report's receipt; such an acknowledgment does not warrant that the report received was complete and therefore met reporting requirements.)
Failure to Maintain Certification	If an Awardee had applied for an award as a Certified CDFI and the certified status is an ongoing obligation of the award but the Awardee has failed to preserve and keep in full force and effect its certification as a CDFI, the CDFI Fund may terminate and rescind the Assistance Agreement and the award made under this NOFA.
Pending Resolution of Noncompliance.	If an Awardee has received prior assistance under any CDFI Fund program and if: (i) It has submitted reports to the CDFI Fund that demonstrate noncompliance with a previous executed agreement with the CDFI Fund; and (ii) the CDFI Fund has yet to make a final determination as to whether the Awardee is in default of its agreement, the CDFI Fund can delay entering into an Assistance Agreement, pending full resolution of the noncompliance issue to the CDFI Fund's satisfaction. If the Awardee is unable to satisfactorily resolve the compliance issues, the CDFI Fund may terminate and rescind the Assistance Agreement and the award made under this NOFA.
Default Status	If, at any time prior to entering into an Assistance Agreement, the CDFI Fund determines that an Awardee is in default of a previously executed agreement with the CDFI Fund and the Awardee has been provided written notification of such determination, the CDFI Fund can delay entering into an Assistance Agreement, until the Awardee has cured the default by taking actions the CDFI Fund has specified within the specified timeframe. If the Awardee is unable to meet this requirement and the CDFI Fund has not specified in writing that the Awardee is otherwise eligible to receive an award under this NOFA, the CDFI Fund may terminate and rescind the Assistance Agreement and the award made under this NOFA.
Final Default and Sanctions	If prior to entering into an Assistance Agreement under this NOFA, the CDFI Fund has: (i) Made a determination that an Awardee was in final default of an executed agreement with the CDFI Fund; and (ii) provided written notification of such final default determination to the Awardee; and (iii) the anticipated date for entering into the Assistance Agreement under this NOFA is within a period of time specified in such notification in which any new assistance is prohibited, the CDFI Fund may terminate and rescind the Assistance Agreement and the award made under this NOFA.
Compliance with Federal Anti-Discrimination Laws.	If prior to entering into an Assistance Agreement under this NOFA, the Awardee receives a final determination, made within the last three years, in any proceeding instituted against the Awardee in, by, or before any court, governmental, or administrative body or agency, declaring that the Awardee has discriminated on the basis of race, color, national origin, disability, age, marital status, receipt of income from public assistance, religion, or sex, the CDFI Fund may terminate and rescind the Assistance Agreement and the award made under this NOFA.

B. Reporting

1. *Reporting requirements:* At least on an annual basis, the CDFI Fund will collect information from each Awardee including, but not limited to, an Annual Report with the following components: (i) Financial Reports, (ii) OMB A–133 audit; (iii) A–133 Narrative Report; (iv) Institution Level Report; (v) Transaction Level Report (for Awardees receiving FA awards); (vi) Financial Status Report SF–425 (for Awardees receiving TA grants); (vii) Uses of Financial Assistance (for Awardees receiving FA awards); (viii) Uses of Technical Assistance (for Awardees receiving TA grants); (ix) Explanation of Noncompliance (as applicable); and (x) such other information as the CDFI Fund may require. Each Awardee is responsible for the timely and complete submission of the Annual Report, even if all or a portion of the documents is actually completed by another entity or signatory to the Assistance Agreement. If such other entities or signatories are required to provide Institution Level Reports, Transaction Level Reports, Financial Reports, or other documentation that the CDFI Fund may require, the Awardee is responsible for ensuring that the information submitted is timely and complete. The CDFI Fund reserves the right to contact such additional entities or signatories to the Assistance Agreement and require that additional information and documentation be provided. The CDFI Fund will use such information to monitor each Awardee's compliance with the requirements in the Assistance Agreement and to assess the impact of the CDFI Program. All reports with the exception of the Institution Level Report and the Transaction Level Report must be electronically submitted directly to the CDFI Fund via the Awardee's myCDFIFund account. The Institution Level Report and the Transaction Level Report must be submitted through the CDFI Fund's web-based data collection system, the Community Investment Impact System (CIIS) accessed through the Awardee's myCDFIFund account. The CDFI Fund reserves the right, in its sole discretion, to modify these reporting requirements if it determines it to be appropriate and necessary; however, such reporting requirements will be modified only after notice to Awardees.

2. *Accounting:* The CDFI Fund will require the Awardee to account for and track the use of its award. This means that Awardees must track every dollar and must inform the CDFI Fund of its uses. This will require Awardees to establish separate administrative and accounting controls, subject to the applicable OMB Circulars. The CDFI Fund will provide guidance on the format and content of the annual information to be provided, outlining and describing how the funds were used. All Awardees are responsible for ensuring their banking account information is updated and accurate in the System for Award Management (SAM) as directed in this NOFA's Section IV. C.

VII. Agency Contacts

A. The CDFI Fund will respond to questions concerning this NOFA and the Application between the hours of 9:00 a.m. and 5:00 p.m. Eastern Time, starting on the date that the NOFA is published through three business days prior to the Application deadline. During the two business days prior to the Application deadline, the CDFI Fund will not respond to questions for Applicants until after the Application deadline. Applications and other information regarding the CDFI Fund and its programs may be obtained from the CDFI Fund's Web site at *http://www.cdfifund.gov.* The CDFI Fund will post on its Web site responses to questions of general applicability regarding the CDFI Program.

B. Applicants may contact the CDFI Fund as follows:

TABLE 12—CONTACT INFORMATION

Fax number for all offices: 202–453–2466

Type of question	Telephone number (not toll free)	Email addresses
CDFI Program	202–653–0421, option 1	*cdfihelp@cdfi.treas.gov.*
Certification, Compliance Monitoring, and Evaluation	202–653–0423	*ccme@cdfi.treas.gov.*
MyCDFIFund—IT Help Desk	202–653–0300	*ITHelpdesk@cdfi.treas.gov.*

C. *Information Technology Support:* People who have visual or mobility impairments that prevent them from creating a Target Market map using the CDFI Fund's Web site should call (202) 653–0300 for assistance (this is not a toll free number).

D. *Communication with the CDFI Fund:* The CDFI Fund will use contact information in myCDFIFund to communicate with Applicants and Awardees. It is imperative; therefore, that Applicants, Awardees, Subsidiaries, Affiliates, and signatories maintain accurate contact information in their accounts. This includes information like contact names, especially for the authorized representative; email addresses; fax and phone numbers; and office locations. For more information about myCDFIFund, as well as information on the Community Investment Impact System, please see the following Web site: *http://www.cdfifund.gov/what_we_do/ciis.asp.*

VIII. Information Sessions and Outreach

The CDFI Fund may conduct webinars or host information sessions for organizations that are considering applying to, or are interested in learning about, the CDFI Fund's programs. For further information, please visit the CDFI Fund's Web site at *http://www.cdfifund.gov.*

Authority: 12 U.S.C. 4701, et seq; 12 CFR parts 1805 and 1815.

Dated: October 23, 2013.

Donna J. Gambrell,

Director, Community Development Financial Institutions Fund.

[FR Doc. 2013–25948 Filed 10–30–13; 8:45 am]

BILLING CODE 4810–70–P

DEPARTMENT OF THE TREASURY

Community Development Financial Institutions Fund

Notice of Funds Availability (NOFA) Inviting Applications for the Native American CDFI Assistance Program (NACA Program) for the Fiscal Year (FY) 2014 Funding Round

Announcement Type: Announcement of funding opportunity.

Catalog of Federal Domestic Assistance (CFDA) Number: 21.020.

DATES: Applications for Financial Assistance (FA) or Technical Assistance (TA) awards through the FY 2014 Funding Round of the NACA Program must be received by 11:59 p.m., Eastern Time (ET), December 23, 2013.

Executive Summary: Subject to funding availability, this NOFA is issued in connection with the FY 2014 Funding Round of the NACA Program, which the Community Development Financial Institutions Fund (CDFI Fund) administers.

I. Funding Opportunity Description

A. *Award Requirements:* The CDFI Fund makes FA awards and TA grants through the NACA Program to entities that meet the requirements set forth in this NOFA. FA awards will be made to Certified Community Development Financial Institutions (CDFIs) serving Native Communities that complete and submit the Application and meet the FA requirements set forth in this NOFA, the Application and the Regulations; TA grants will be made to Certified, Certifiable and Emerging CDFIs serving Native Communities and Sponsoring Entities that complete and submit the Application and meet the TA requirements set forth in this NOFA, the Application and the Regulations. Through the FY 2014 Funding Round, the CDFI Fund will also make FA awards for Healthy Food Financing Initiative (HFFI–FA) activities to Certified CDFIs serving Native Communities that complete and submit the Application and meet the HFFI–FA requirements set forth in the NOFA, the Application and the Regulations. NACA Applicants that are interested in applying for HFFI–FA can find additional details about that program in the FY 2014 Community Development Financial Institutions Program (CDFI Program) NOFA. For purposes of this NOFA, the term ''Native Community'' means a Native American, Alaska Native, or Native Hawaiian population, land or Census-equivalent entity (as defined by the Bureau of the Census). In addition, Native Community includes a Native Other Targeted Population as described in Table 3 of this NOFA for Native Americans or American Indians, including Alaska Natives living in Alaska and Native Hawaiians living in Hawaii.

B. *Program Regulations:* The regulations governing the NACA Program are found at 12 CFR Parts 1805 and 1815 (the Regulations) and provide guidance on evaluation criteria and other requirements. Details regarding Application content requirements are found in the Application and related materials. Capitalized terms are defined in this NOFA, the Regulations, or the Application. The CDFI Fund encourages Applicants to review the Regulations in addition to this NOFA.

C. The CDFI Fund reserves the right to fund, in whole or in part, any, all, or none of the Applications submitted in response to this NOFA. The CDFI Fund also reserves the right to reallocate funds from the amount that is anticipated to be available through this NOFA to other CDFI Fund programs, particularly if the CDFI Fund determines that the number of awards

made through this NOFA is fewer than projected.

D. *Coordination with Broader Community Development Strategies:* Consistent with Federal efforts to promote community revitalization, it is important for communities to develop a comprehensive neighborhood revitalization strategy that addresses neighborhood assets essential to transforming distressed neighborhoods into healthy and vibrant communities. Neighborhood transformation can best occur when comprehensive neighborhood revitalization plans embrace the coordinated use of programs and resources that address the interrelated needs within a community. Although not a requirement for participating in the NACA Program, the Federal government believes that a CDFI will be most successful when it is part of, and contributes to, an area's broader neighborhood revitalization strategy.

II. Award Information

A. Funding Availability

1. *FY 2014 Funding Round:* Subject to funding availability, the CDFI Fund expects to award, through this NOFA, approximately $12 million in NACA awards for FA and TA Applicants.

In the recent past, Congress mandated that at least ten percent of the CDFI Program's appropriations be directed to counties that meet certain criteria for ''persistent poverty.'' This requirement continues under this NOFA. As a result, the CDFI Fund invites Applicants to indicate their level of participation in persistent poverty counties in their FY 2014 applications. The CDFI Fund reserves the right to award more or less than the amount cited above in the FY 2014 Funding Round, based upon available funding and other applicable factors.

2. *Funding Availability for the FY 2014 Funding Round:* Funds for the FY 2014 Funding Round have not yet been appropriated; if Congress does not appropriate funds for the NACA Program, there will not be a FY 2014 Funding Round. If funds are appropriated, the amount of such funds may be greater or less than the amounts set forth above. CDFIs that quality for the Native American CDFI Assistance (NACA) Program are encouraged to apply for CDFI Program funds in case no funds are appropriated for the NACA Program.

All awards made through this NOFA must be used to support the Applicant's activities. Awards cannot be used to support the activities of, or otherwise be passed through, transferred, or co-awarded to, third-party entities, whether Affiliates, Subsidiaries, or others with the exception for Sponsoring Entitles that can use TA funds to create a separate legal entity and then transfer the TA funds to help the entity become a Certified CDFI serving a Native Community. The entity that is to carry out the responsibilities of the award and deploy the award funds (the Awardee) must be the entity that applies for the award. In the case where a CDFI bank-holding company Applicant intends to deploy its FA award through its 100 percent wholly-owned CDFI subsidiary bank, the Application must be made at the CDFI bank-holding company level and reflect consolidated activities and financial performance. Authorized representatives of both the holding company and the bank must certify that the information included in the Application represents that of the CDFI bank and that the award funds will be used to capitalize the CDFI bank for the activities outlined in the Application.

B. *Types of Awards:* An Applicant may submit an Application for a FA award or a TA grant, but not both. For purposes of this NOFA, ''FA awards'' include awards made using NACA Program FA funds and awards made using HFFI–FA funds.

1. *FA Awards:* FA awards provide flexible financial support to CDFIs so they may execute the organizational goals outlined in their Applications. FA awards can be used in the following five categories: (i) Financial Products; (ii) Financial Services; (iii) Development Services; (iv) Loan Loss Reserves; and (v) Capital Reserves, and can include up to 15 percent of the total award in Administrative Funds to carry out the eligible uses. For purposes of this NOFA, the five categories mean:

TABLE 1—FIVE CATEGORIES OF FA

(i) Financial Products	Loans, grants, equity investments, and similar financing activities, including the purchase of loans that the Applicant originates and the provision of loan guarantees, in the Applicant's Target Market, or for related purposes that the CDFI Fund deems appropriate.
(ii) Financial Services	Checking and savings accounts, certified checks, automated teller machines services, deposit taking, remittances, safe deposit box services, and other similar services.
(iii) Development Services	Activities that promote community development and help the Applicant provide its Financial Products and Financial Services, including financial or credit counseling, housing and homeownership counseling (pre- and post-), self-employment technical assistance, entrepreneurship training, and financial management skill-building.
(iv) Loan Loss Reserves	Funds set aside in the form of cash reserves, or through accounting-based accrual reserves, to cover losses on loans, accounts, and notes receivable made in the Target Market, or for related purposes that the CDFI Fund deems appropriate.
(v) Capital Reserves	Funds set aside as reserves to support the Applicant's ability to leverage other capital, for such purposes as increasing its net assets or serving the financing needs of its Target Market, or for related purposes that the CDFI Fund deems appropriate.

The CDFI Fund may provide FA awards in the form of equity investments (including secondary capital in the case of certain Insured Credit Unions), grants, loans, deposits, credit union shares, or any combination thereof. As described in this NOFA, FA Applicants must meet certain matching funds requirements; the form of the FA Applicant's matching funds will dictate the form of the FA award. The CDFI Fund reserves the right, in its sole discretion, to provide an FA award in an amount other than that which the Applicant requests; however, the award amount will not exceed the Applicant's award request as stated in its Application.

2. *TA Grants:* (a) The CDFI Fund provides TA in the form of a grant and reserves the right, in its sole discretion, to provide a TA grant for amounts other than which the Applicant requests; however, the TA grant amount will not exceed the Applicant's request as stated in its Application and the applicable budget chart.

(b) TA eligible uses are: (i) Personnel/salary; (ii) personnel/fringe; (iii) professional services; (iv) travel; (v) training; and (vi) equipment. Please see the Application for details on TA uses. TA grants must be used to build the Applicant's capacity. An Applicant that is an Emerging CDFI serving Native Communities and has not received a

previous TA award will be rated, among other elements, on its plan to meet the requirements of a Certified CDFI within two years. An Applicant that is an Emerging CDFI serving Native Communities and is a prior TA awardee will be rated, among other elements, on its plan to meet the CDFI certification goal specified in its previous NACA Program Assistance Agreement.

C. *Assistance Agreement:* All Awardees, prior to receiving award funds, must sign an Assistance Agreement, which contains the award's terms and conditions. For further information, see Section VI.A of this NOFA.

III. Eligibility Information

A. Eligible Applicants

In order to be eligible for a NACA FA award, an Applicant must be a Certified CDFI or Certifiable CDFI that has identified one or more Native Communities as part of its certified Target Market. Furthermore, each NACA FA Applicant must demonstrate that at least 50 percent of its past activities were in one or more Native Communities and describe how it will target its lending/investing activities to one or more Native Communities. All NACA FA Applicants must demonstrate strong Community Partnerships with Native Communities as well.

In order to be eligible for a TA award, an Applicant must be a Certifiable or Emerging CDFI that serves or will serve Native Communities. A Sponsoring Entity is also eligible to apply for a TA grant if it does not have a prior active award from the CDFI Fund or if the certification goal has been satisfied in its prior active award and it is proposing to create another CDFI that will serve one or more Native Communities. The Sponsoring Entity will be expected to create the Emerging CDFI within one year of the Effective Date in its FY 2014 Assistance Agreement with the CDFI Fund and must include the Emerging CDFI as a co-awardee in the Assistance Agreement once it has been legally created. The Sponsoring Entity and the Emerging CDFI will be given four years from the Effective Date in the FY 2014 Assistance Agreement for the Emerging CDFI to become certified. Beginning in FY 2014, an Emerging CDFI will be allowed to receive no more than three TA awards as an uncertified CDFI. For purposes of this NOFA, a Sponsoring Entity is an entity that proposes to create a separate legal entity that will become a Certified CDFI serving a Native Community. Sponsoring Entities include: (a) A Tribe, Tribal entity, Alaska Native Village, Village Corporation, Regional Corporation, Non-Profit Regional Corporation/Association, or Inter-Tribal or Inter-Village organization; or (b) an organization whose primary mission is to serve a Native Community including, but not limited to, an Urban Indian Center, a Tribally Controlled Community College, community development corporation, training or education organization, or Chamber of Commerce and that primarily serves Native Community with ''primary'' meaning, at least 50 percent of its activities are directed toward the Native Community.

1. *Applicant Categories:* FA and TA Applicants must meet the criteria listed in the table below.

TABLE 2—NACA APPLICANT ELIGIBILITY

Applicant category	Applicant eligibility	Applicant may apply for:
FA	1. A Certified or Certifiable CDFI that has identified at least one or more Native Communities as its Target Market, which can include a Native ''Other Targeted Populations'' (OTP) Target Market. 2. A Certifiable CDFI must submit a certification application in accordance with the deadlines in this NOFA. 3. The Applicant must demonstrate that at least 50 percent of its past activities were in Native Communities and describe how it will target its lending/investing activities to one or more Native Communities. 4. The Applicant must demonstrate strong Community Partnership(s) within the Native Community in its NACA Application.	Up to and including $750,000 in FA funds.
TA	1. A Certified, Certifiable, or Emerging CDFI that has identified at least one or more Native Community as its Target Market, which can include a Native OTP Target Market. Beginning in FY 2014, an Emerging CDFI will be allowed to receive no more than three TA awards as an uncertified CDFI. 2. A Sponsoring Entity that has not received a prior TA award and can demonstrate the Emerging CDFI will be established within one full fiscal year of the Effective Date in its FY 2014 Assistance Agreement with the CDFI Fund. The Applicant must agree to include the Emerging CDFI as a co-awardee once it has been legally created. 3. Sponsoring Entities that have received a prior award must have satisfied the certification goal of the prior award and is proposing to create another CDFI that will serve one or more Native Communities.	Up to $150,000 for capacity building activities.

2. *CDFI Certification Requirements:* For purposes of this NOFA, as defined in the table below, eligible FA Applicants include Certified/Certifiable CDFIs serving Native Communities; eligible TA Applicants include Certified, Certifiable, or Emerging CDFIs serving Native Communities. The table below also includes criteria for using ''Other Targeted Populations'' as a Target Market for Certification. All Applicants must be certified or recertified as of June 1, 2014 or any date thereafter prior to the announcement of awards; Applicants that are in a cure period to remedy recertification deficiencies as of June 1, 2014 or any date thereafter prior to the announcement of awards will not be eligible for FA awards under this NOFA. Please see the CDFI Fund's Web site for additional information regarding recertification and cure periods at Frequently Asked Questions regarding CDFI Recertification at *http://www.cdfifund.gov/docs/2013/certification/Frequently%20Asked%20Questions%20Recert.pdf.*

TABLE 3—CERTIFICATION REQUIREMENTS FOR CDFIS SERVING NATIVE COMMUNITIES

Certified CDFI	An entity that the CDFI Fund has officially notified meets all certification requirements for a CDFI. A Certified Applicant must submit a Certification of Material Events form *only* if it has experienced a material event. A "material event" is an occurrence that affects an organization's strategic direction, mission, or business operation and, thereby, its status as a Certified CDFI and/or its compliance with the terms and conditions of an Assistance Agreement.
Certifiable CDFI	An entity that has submitted a Certification Application to the CDFI Fund demonstrating that it meets the certification requirements for a CDFI, but for which the CDFI Fund has not yet officially certified the entity. If the CDFI Fund is unable to certify an Applicant and the Applicant is selected for an FA award, the CDFI Fund may, in its sole discretion, terminate the award commitment. The CDFI Fund will not enter into an Assistance Agreement or disburse FA award funds unless and until an Applicant is certified. See Table 6 for the deadline to submit Certification Application.
Emerging CDFI	A non-certified entity that demonstrates to the CDFI Fund that it has an acceptable plan to meet certification requirements by the end of its FY 2016, or another date that the CDFI Fund selects. Emerging CDFIs that have prior awards will be held to the certification date in their prior Assistance Agreements. Emerging CDFIs may only apply for TA grants; they are not eligible to apply for FA awards. Each Emerging CDFI selected to receive a TA grant will be required to become a Certified CDFI by a date specified in the Assistance Agreement.
d) Native Other Targeted Population as Target Market.	To define these populations for the purposes of this NOFA, the CDFI Fund uses the following definitions, set forth in the Office of Management and Budget (OMB) Notice, Revisions to the Standards for the Classification of Federal Data on Race and Ethnicity (October 30, 1997), as amended and supplemented: (a) American Indian, Native American, or Alaska Native: A person having origins in any of the original peoples of North and South America (including Central America) and who maintains tribal affiliation or community attachment; (b) Native Hawaiian (living in Hawaii): A person having origins in any of the original peoples of Hawaii; and

3. *Limitation on Awards:* An Applicant may receive either an award through this NOFA or an award through the CDFI Program NOFA, but not both. Although eligible Applicant can apply for the NACA Program and the CDFI Program, it will receive only one FY 2014 award. A Sponsoring Entity is only eligible to apply for an award if it does not have an active prior award or the certification goal in its active award's Assistance Agreement has been satisfied. An Emerging CDFI serving a Native Community that has received three prior TA awards is not eligible to receive an additional TA award.

B. Prior Awardees

Prior Awardees should note the following:

1. *$5 Million Funding Cap:* The CDFI Fund is currently prohibited from obligating more than $5 million in CDFI and NACA Program awards, in the aggregate, to any one organization and its Subsidiaries and Affiliates during any three-year period. In general, the three-year period calculated for the cap extends back three years from the Effective Date of the Assistance Agreement between the Awardee and the CDFI Fund. However, for purposes of this NOFA, because the funding cap was waived for FY 2009, FY 2010, and FY 2011, the CDFI Fund will include awards in the cap calculation that were provided to an Applicant (or its Subsidiaries or Affiliates) beginning with the FY 2012 Funding Round, excluding FY 2012 HFFI–FA awards. The CDFI Fund will assess the $5 million funding cap applicability during the award selection phase.

Please see the following table for other prior Awardee requirements and considerations.

TABLE 4—PRIOR AWARDEE REQUIREMENTS AND CONSIDERATIONS

Prior awardee situation	Requirements and considerations
Failure to Meet Reporting Requirements	The CDFI Fund will not consider an Application submitted by an Applicant that is not current on reporting requirements in a previously executed agreement under any CDFI Fund program as of this NOFA's Application deadline. (Please note that the CDFI Fund's automated systems for receipt of reports submitted electronically typically acknowledge only a report's receipt. Such an acknowledgment does not verify nor otherwise represent that the report received was complete and therefore met reporting requirements.)
Pending Resolution of Noncompliance	The CDFI Fund will consider an Application pending full resolution of any noncompliance issues if the Applicant has: (i) Submitted reports demonstrating noncompliance with a previously executed agreement under any CDFI Fund program, and (ii) the CDFI Fund has yet to make a final determination as to whether the Applicant is in default of its previously executed agreement.
Default Status	The CDFI Fund will not consider an Application submitted by an Applicant that is in default of a previously executed agreement under any CDFI Fund program, at the time of the Application deadline: (i) If the CDFI Fund has made a determination that the Applicant is in default of the agreement and the default is final; (ii) the CDFI Fund has provided written notification of the final default determination to the Applicant; and (iii) the Application deadline is within a period of time specified in the written notification in which a new Application from the Applicant is prohibited.

TABLE 4—PRIOR AWARDEE REQUIREMENTS AND CONSIDERATIONS—Continued

Prior awardee situation	Requirements and considerations
Undisbursed Award Funds	The CDFI Fund will not consider an Application submitted by an Applicant that has undisbursed funds as defined below, as of the Application deadline. The CDFI Fund will include the combined undisbursed prior awards of the Applicant and its affiliated entities, including those in which the affiliated entity Controls the Applicant, is Controlled by the Applicant, or shares common management officials with the Applicant as the CDFI Fund determines. Undisbursed awards cannot exceed five percent of the total includable awards for the Applicant's Bank Enterprise Award (BEA) Program/CDFI Program/NACA Program awards, as of the Application deadline. (The total ''includable'' award amount is the total award amount from the relevant CDFI Fund program.) The ''undisbursed award funds'' calculation does not include award funds for: (i) Which the Awardee has submitted a full and complete disbursement request before the Application deadline; (ii) an award that has been terminated or de-obligated; or (iii) an award that does not have a fully executed agreement; and (iv) the tax credit allocation authority made available through the NMTC Program.
BEA Program Undisbursed Awards Calculations	For the BEA Program, undisbursed funds will include the Applicant's undisbursed awards three to five calendar years prior to the end of the calendar year of the Application deadline. For purposes of this NOFA, therefore, undisbursed awards made in FYs 2008, 2009, and 2010 will be included in the Applicant's undisbursed award amounts if the funds have not been disbursed as of the Application deadline.
NACA/CDFI Program Undisbursed Awards Calculations.	Undisbursed funds will be calculated by adding all undisbursed award amounts made to the Applicant two to five calendar years prior to the end of the calendar year of this NOFA. Therefore, undisbursed NACA Program/CDFI Program awards made in FYs 2008, 2009, 2010, and 2011 will be included in the undisbursed calculation as of the Application deadline. The CDFI Fund reserves the right to adjust the award amount based upon the amount of FY 2012 and FY 2013 awards that remain undisbursed.

2. *Contact the CDFI Fund:* Applicants that are prior Awardees are advised to: (i) Comply with requirements specified in their executed agreements and (ii) contact the CDFI Fund at least 10 business days prior to this NOFA's Application deadline to ensure necessary actions are underway for the disbursement or de-obligation of any prior outstanding award balance(s) as referenced above.

C. Matching Funds

1. *Matching Funds Requirements in General:* FA Applicants must provide dollar-for-dollar non-Federal matching funds for every FA NACA award dollar. The FY 2014 Continuing Resolution (CR) requires matching funds for Category II/Core FA and HFFI–FA Applicants only. The CR has waived the matching funds requirement for NACA Applicants and matching funds are not required for TA Applicants. If matching funds are not waived, they must be comparable in form and value to the FA award. This means that FA Applicants must show they have matching funds in-hand or firmly committed from non-Federal sources equal to the amount requested from the CDFI Fund. Applicants cannot use matching funds from a prior FA award under the NACA or CDFI Programs or under another federal grant or award program to satisfy the matching funds requirement of this NOFA. If an Applicant seeks to use matching funds from an organization that was a prior Awardee under the NACA or CDFI Programs, the CDFI Fund will deem such funds as Federal funds, unless the funding entity establishes and the CDFI Fund agrees, that such funds do not consist, in whole or in part, of CDFI Program funds or other Federal funds. The CDFI Fund reserves the right to contact the matching funds source to discuss the matching funds and the documentation that the Applicant has provided. The CDFI Fund encourages Applicants to review the Regulations at 12 C.F.R. § 1805.500 et seq. and matching funds guidance materials on the CDFI Fund's Web site for further information.

2. *Matching Funds Deadlines:* If matching funds are required after this NOFA is released, the CDFI Fund will give NACA Applicants 30 days to submit the matching funds documentation. The Applicant must demonstrate that it has eligible matching funds in-hand or firmly committed equal to no less than 50 percent of the FA amount being requested on or after January 1, 2012 and on or before the Application deadline. The CDFI Fund reserves the right to rescind all or a portion of an FA award and re-allocate the rescinded award amount to other qualified Applicant(s), if an Applicant fails to obtain in-hand 100 percent of the required matching funds by January 15, 2015 (and submitted to the CDFI Fund no later than January 31, 2015). The CDFI Fund may grant an extension of such matching funds deadline for specific FA Applicants if the CDFI Fund deems it appropriate.

3. *Matching Funds Terms Defined; Required Documentation*

TABLE 5—MATCHING FUNDS DEFINITIONS

Type of matching funds	Definition
Matching funds "in-hand"	The Applicant has actually received disbursement of the matching funds and provides acceptable written documentation, showing the source, form, and amount of the matching funds (i.e., grant, loan, deposit, and equity investment). Applicants must provide copies of the following documentation depending on the type of award being requested: (i) Loans—the loan agreement and promissory note; (ii) grant—the grant letter or agreement for all grants of $50,000 or more; (iii) equity investment—the stock certificate and any related shareholder agreement; (iv) retained earnings audits or call reports from regulating entity. The Applicant must also provide acceptable documentation that demonstrates receipt of the matching funds, such as a copy of a check or a wire transfer statement.
Matching funds "firmly committed"	The Applicant has entered into or received a legally binding commitment from the matching funds source showing the match funds will be disbursed to the Applicant. The Applicant must also provide acceptable written documentation showing the source, form, and amount of the firm commitment (and, in the case of a loan, the terms thereof), as well as the anticipated disbursement date of the committed funds.

4. *Matching Loan Requests:* The CDFI Fund will match eligible loans provided as non-federal matching funds with a standard loan product. For purposes of this NOFA, the standard loan product will be a 13-year loan with semi-annual interest-only payments due in years one through ten, and fully amortizing payments due each year in years eleven through thirteen. The interest rate will be fixed for the term of the note at 1.95 percent, which is based on the U.S. Department of the Treasury's 10-year Treasury note. In order for a loan to qualify to be matched by the standard loan product, the loan must have a minimum of a three-year term. Any loan presented as matching funds with less than a three-year term will not qualify as eligible match.

5. *Ineligible Matching Funds:* If the CDFI Fund determines that any portion of the Applicant's matching funds is ineligible, the CDFI Fund, in its sole discretion, may permit the Applicant to offer alternative matching funds as a substitute for the ineligible matching funds. In such instances: (i) The Applicant must provide acceptable alternative matching funds documentation within a written specified period of time, no less than two business days, and (ii) the alternative matching funds documentation will not increase the total amount of FA the Applicant requested.

6. *Retained Earnings:* The Regulations allow an Applicant to use retained earnings to serve as matching funds for a FA award. The CDFI Fund will calculate retained earnings eligible to be used as matching funds in an amount equal to: (i) The increase in retained earnings that has occurred over the Applicant's most recent fiscal year, adjusted to remove revenue and expenses derived from federal sources and matching funds previously used for an award; or (ii) the annual average of such increases that has occurred over the Applicant's three most recent fiscal years, adjusted to remove revenue and expenses derived from federal sources and matching funds previously used for an award.

7. *Special Rule for Insured Credit Unions:* The Regulations allow an Insured Credit Union to use retained earnings to serve as matching funds for a FA award. The CDFI Fund will calculate retained earnings for Insured Credit Unions in an amount equal to: (i) The increase in retained earnings that occurred over the Applicant's most recent fiscal year, adjusted to remove revenue from federal sources and matching funds previously used for an award; (ii) the annual average of such increases that has occurred over the Applicant's three most recent fiscal years, adjusted to remove revenue from federal sources and matching funds previously used for an award; or (iii) the entire retained earnings that have been accumulated since the inception of the Applicant, as provided in the Regulations. For purposes of this NOFA, if option (iii) is used, the Applicant must increase its member and/or non-member shares and/or total loans outstanding by an amount equal to the amount of retained earnings committed as matching funds. This increase will be measured from June 30, 2014 and must occur by the end of the Awardee's first performance period, as set forth in its Assistance Agreement, and will be based on amounts reported in the Applicant's National Credit Union Administration (NCUA) Form 5300 call report. The CDFI Fund will assess the likelihood of this increase during the Application review process. An award will not be made to any Applicant that has not demonstrated in the relevant financial statements or NCUA call report that it has increased shares and/or loans by at least 25 percent of the requested FA award amount between December 31, 2012, and December 31, 2013. The match will not be considered in-hand until the Awardee has increased its member and/or non-member shares or total loans outstanding within the time period specified.

IV. Application and Submission Information

A. *Application Submission:* Applicants must submit Applications electronically through Grants.gov. The CDFI Fund will not accept Applications through myCDFIFund accounts nor will Applications be accepted via email, mail, facsimile, or other forms of communication, except in circumstances approved by the CDFI Fund beforehand. If Applicants submit multiple Applications, the CDFI Fund will only review the last Application submitted; all other Applications will be considered ineligible.

B. *Grants.gov:* In compliance with Public Law 106–107 and Section 5(a) of the Federal Financial Assistance Management Improvement Act, the CDFI Fund is required to accept Applications submitted through the Grants.gov electronic system. The CDFI Fund strongly recommends Applicants start the registration process as soon as possible and visit *www.grants.gov* immediately. Applicants that have used Grants.gov in the past must verify that their registration is current and active. New Applicants must properly register, which may take several weeks to complete. Pursuant to OMB guidance (68 **Federal Register** 38402), each Applicant must provide, as part of its Application submission, a Dun and Bradstreet Universal Numbering System (DUNS) number. In addition, each Application must include a valid and current Employer Identification Number (EIN). An electronic Application that does not include a DUNS number and an EIN is incomplete and may not be

transmitted to the CDFI Fund from Grants.gov. As a result, Applicants without a DUNS number and EIN should allow sufficient time for the Internal Revenue Service (IRS) and/or Dun and Bradstreet to respond to inquiries and/or requests for identification numbers.

The CDFI Fund will not consider Applicants that fail to properly register in Grants.gov or to confirm they are properly registered and as a result, are unable to submit their Applications before the deadline. Applicants are reminded that the CDFI Fund does not maintain the Grants.gov registration or submittal process so Applicants must contact Grants.gov directly for issues related to that aspect of the Application submission process. Please see the following link for information on getting started on Grants.gov: *http://grants.gov/applicants/organization_registration.jsp.*

C. *System for Award Management (SAM):* Any entity applying for federal grants or other forms of federal financial assistance through Grants.gov, must be registered in SAM. Applicants must verify that their registration is current and active in SAM. New Applicants must properly register and wait for the account to be activated, which does not occur simultaneously and may take weeks to complete for Applicants that have an EIN. If an Applicant does not have an EIN, the Applicant should allow several weeks for obtaining the information from the IRS when requesting the EIN via phone, fax, mail or Internet. The CDFI Fund will not consider Applicants that fail to properly register or activate their account in SAM and as a result, are unable to submit their Applications before the deadline. The CDFI Fund does not maintain the SAM registration process, so Applicants must contact SAM directly for issues related to registration. The CDFI Fund strongly encourages Applicants to ensure that their SAM registration is updated and that their accounts are active. For information regarding SAM, please visit *https://www.sam.gov/portal/public/SAM/.*

D. *myCDFIFund Accounts:* MyCDFIFund is the CDFI Fund's primary means of communication with Applicants. Each Applicant is responsible for ensuring its myCDFIFund account is up-to-date at all times. Each Applicant must register as an organization and as a user with myCDFIFund before the Application deadline. An Applicant that fails to properly register and update its myCDFIFund account may miss important communication with the CDFI Fund that could impact its Application. For more information on myCDFIFund, please see the ''Frequently Asked Questions'' link posted at *https://www.cdfifund.gov/myCDFI/Help/Help.asp.*

E. *Application Content Requirements:* The Application and related documents can be found on the Grants.gov and the CDFI Fund's Web sites. The CDFI Fund anticipates posting the Application and related documents to the CDFI Fund's Web site on the same day that the NOFA is released or shortly thereafter. Once an Application is submitted to Grants.gov, the Applicant will not be allowed to change any element of the Application. The CDFI Fund, however, may contact the Applicant to clarify or confirm Application information.

F. *Paperwork Reduction Act:* Under the Paperwork Reduction Act (44 U.S.C. chapter 35), an agency may not conduct or sponsor a collection of information, and an individual is not required to respond to a collection of information, unless it displays a valid OMB control number. Pursuant to the Paperwork Reduction Act, the CDFI Program funding Application has been assigned the following control number: #1559–0021.

G. *Application Deadlines:*

1. Please see the following table for critical deadlines that are relevant to the FY 2014 Funding Round.

TABLE 6—FY 2014 FUNDING ROUND APPLICATION CRITICAL DATES

Description	Date due	Time (ET)
Last day to contact Program staff	December 18, 2013	5:00 p.m.
NACA Program Application for Assistance	December 23, 2013	11:59 p.m.
Certification Applications	November 22, 2013	5:00 p.m.
Certification of Material Events Form—only for Applicants that have had a Material Event.	November 22, 2013	5:00 p.m.

2. *Late Delivery:* The CDFI Fund will not accept an Application or any portion of an Application delivered after the Application deadline. Applicants are responsible for submitting their Applications on time through Grants.gov. The CDFI Fund will not grant exceptions or waivers. Any Application that is deemed ineligible or rejected will not be returned to the Applicant.

H. *Intergovernmental Review:* Not applicable.

I. *Funding Restrictions:* For allowable uses of FA proceeds, please see the Regulations at 12 CFR 1805.301.

V. Application Review Information

A. *Format:* Applicants must complete, and the CDFI Fund will only accept, the Application as provided in Grants.gov and the CDFI Fund's Web site. The FY 2014 Application is a compilation of multiple mandatory documents including: (1) a PDF fillable Applicant intake form; (2) a Microsoft Excel Workbook; (3) a Microsoft Word Narrative template; and (4) other mandatory attachments. (Applicants must use the Microsoft Word Narrative template the CDFI Fund provides; alternative templates/formats will not be scored.) Applicants should not submit information that has not been specifically requested in this NOFA or the Application.

B. Review and Selection Process

1. *Eligibility and Completeness Review:* The CDFI Fund will review each Application to determine whether it is complete and the Applicant meets the eligibility requirements described in Section III of this NOFA. An incomplete Application or one that does not meet eligibility requirements will be rejected.

2. *Substantive Review:* If the Applicant has submitted a complete and eligible Application, the CDFI Fund will conduct a substantive review in accordance with the criteria and procedures described in the Regulations, this NOFA, and the Application guidance. The CDFI Fund reserves the right to contact the Applicant by telephone, email, or mail for the sole purpose of clarifying or confirming Application information. If contacted, the Applicant must respond within the CDFI Fund's time parameters or run the risk of its Application being rejected.

3. *Application Scoring and Award Selection (FA and TA Applicants):* (a) *Application Scoring:* The CDFI Fund will evaluate each Application on the

criteria categories and the scoring scale described in the Application. An Applicant must receive a minimum aggregate score in order to be considered for an award. The CDFI Fund will score each part as indicated in the following table:

TABLE 7—APPLICATION SCORING CRITERIA

Comprehensive Business Plan sections	FA applicants	TA applicants
Executive Summary	Not Scored	Not Scored.
Purpose/Proposal	10 points	15 points.
Products	10 points	10 points.
Policies	10 points	10 points.
People	10 points	15 points.
Partnerships	10 points	5 points.
Performance	40 points	30 points.
Projections	10 points	15 points.
Total Point	100 points	100 points.

Applicants whose activities are part of a broader neighborhood revitalization strategy and/or that target marginalized or isolated populations will be scored more favorably in the section of the Application pertaining to Partnerships.

(b) *Evaluating Prior Award Performance:* The CDFI Fund will deduct points, in accordance with the following table, from Applicants who have received prior assistance under any CDFI Fund program:

TABLE 10—POINT DEDUCTIONS

Issues	Descriptions
Failure to Meet Agreement Requirements	The CDFI Fund will deduct points from Applicants who have not met requirements in previously executed agreements under any CDFI Fund program including compliance reports due during the previous 24 months prior to the Application deadline date.
Failure to Provide Timely Loan Payments	The CDFI Fund will deduct points from Applicants who have failed to submit timely loan payments to the CDFI Fund within the 24 months prior to the Application deadline (if applicable).
Incurred De-obligations	The CDFI Fund will deduct points from Applicants if funds were de-obligated for FA awards issued in FY 2010, 2011 or 2012 and if the de-obligation occurred within the 12 months prior to the Application deadline. Point deductions in this funding round for a de-obligation of a prior award will not be counted against future FA Applications.
Determination of Discrimination	The CDFI Fund will deduct points from Applicants if proceedings have been instituted against them in, by, or before any court, governmental agency, or administrative body and a final determination within the last three years indicates the Applicant has discriminated on the basis of race, color, national origin, disability, age, marital status, receipt of income from public assistance, religion, or sex.

(c) *Award Selection:* The CDFI Fund will make its final award selections based on the Applicants' scores, ranked from highest to lowest, and the amount of funds available. In the case of tied scores, Applicants will be ranked first according to each Performance score; then the Purpose score. TA Applicants and FA Applicants will be grouped and ranked separately. In addition, the CDFI Fund may consider the institutional and geographic diversity of Applicants when making its funding decisions.

4. *Insured CDFIs:* In the case of Insured Depository Institutions and Insured Credit Unions, the CDFI Fund will consider information provided by, and views of, the Appropriate Federal Banking Agencies. If the Applicant is a CDFI bank holding company, the CDFI Fund will consider information provided by the Appropriate Federal Banking Agencies of the CDFI bank holding company and the CDFI bank that will implement the award. Throughout the award review process, the CDFI Fund will consult with the Appropriate Federal Banking Agency about the Applicant's financial safety and soundness. If the Appropriate Federal Banking Agency identifies safety and soundness concerns, the CDFI Fund will assess whether the concerns cause or will cause the Applicant to be incapable of undertaking the activities for which funding has been requested. If it is determined the Applicant is incapable of meeting its obligations, the CDFI Fund reserves the right to withdraw the award decision. The CDFI Fund also reserves the right to require Insured CDFI Applicants to improve safety and soundness conditions prior to receiving an award disbursement. In addition, the CDFI Fund will take into consideration Community Reinvestment Act assessments of Insured Depository Institutions and/or their Affiliates.

5. *Award Notification:* Each Applicant will be informed of the CDFI Fund's award decision through a notification in the Applicant's myCDFIFund account. This includes notification to Applicants that have not been selected for an award if the decision is based on reasons other than completeness or eligibility. Applicants that have not been selected for an award will receive a debriefing notice in their myCDFIFund account.

6. *Application Rejection:* The CDFI Fund reserves the right to reject an Application if information (including administrative errors) comes to the CDFI Fund's attention that either adversely affects an Applicant's eligibility for an award; adversely affects the Awardee's certification as a CDFI (to the extent that the Award is conditional upon CDFI certification); adversely affects the CDFI Fund's evaluation or scoring of an

Application; or indicates fraud or mismanagement on the Applicant's part. If the CDFI Fund determines any portion of the Application is incorrect in a material respect, it reserves the right, in its sole discretion, to reject it. The CDFI Fund reserves the right to change its eligibility and evaluation criteria and procedures, if the CDFI Fund deems it appropriate. If the changes materially affect the CDFI Fund's award decisions, it will provide information about the changes through its Web site. The CDFI Fund's award decisions are final and there is no right to appeal the decisions.

VI. Award Administration Information

A. *Assistance Agreement:* Each Applicant selected to receive an award must enter into an Assistance Agreement with the CDFI Fund in order to receive a disbursement(s). The Assistance Agreement will set forth the award's terms and conditions, including but not limited to the award: (i) Amount; (ii) type; (iii) uses; (iv) targeted market or activities; (v) performance goals and measures; and (vi) reporting requirements. FA Assistance Agreements will usually have three-year performance periods; TA Assistance Agreements will usually have two-year performance periods. All FA and TA Awardees that are not Insured CDFIs will be required to provide the CDFI Fund with a certificate of good standing from the secretary of state for the Awardee's state of incorporation. This certificate can often be acquired online on the secretary of state Web site for the Awardee's state of incorporation and must generally be dated within 270 days from the date the Awardee executes the Assistance Agreement. Due to potential backlogs in state government offices, Applicants are advised to submit requests for certificates of good standing at the time that they submit their Applications.

If prior to entering into an Assistance Agreement, information (including administrative error) comes to the CDFI Fund's attention that adversely affects the Awardee's: (i) Eligibility for an award; (ii) certification as a CDFI (to the extent that the Award is conditional upon CDFI certification); or (iii) Application evaluation as conducted by the CDFI Fund; or (iv) indicates fraud or mismanagement on the Awardee's part, the CDFI Fund may, in its discretion and without advance notice to the Awardee, terminate the award or take such other actions as it deems appropriate. The CDFI Fund reserves the right, in its sole discretion, to rescind an award if the Awardee fails to return the Assistance Agreement, signed by the authorized representative of the Awardee, and/or provide the CDFI Fund with any other requested documentation, within the CDFI Fund's deadlines.

In addition, the CDFI Fund, reserves the right in its sole discretion, to terminate and rescind the Assistance Agreement and the award made under this NOFA pending the criteria described in the following table:

TABLE 11—REQUIREMENTS PRIOR EXECUTING AN ASSISTANCE AGREEMENT

Requirement	Criteria
Failure to Meet Reporting Requirements	If an Awardee has received prior assistance under any CDFI Fund program and is not current with the reporting requirements in the previously executed agreement(s), the CDFI Fund can delay entering into an Assistance Agreement until reporting requirements are met. If such an Awardee is unable to meet the requirement within the timeframe specified, the CDFI Fund may terminate and rescind the Assistance Agreement and the award made under this NOFA. (Please note that the automated systems the CDFI Fund uses for receipt of reports submitted electronically typically acknowledges only a report's receipt; such an acknowledgment does not warrant that the report received was complete and therefore met reporting requirements.)
Failure to Maintain Certification	If an Awardee had applied for an award as a Certified CDFI and the certified status is an ongoing obligation of the award but the Awardee has failed to preserve and keep in full force and effect its certification as a CDFI, the CDFI Fund may terminate and rescind the Assistance Agreement and the award made under this NOFA.
Pending Resolution of Noncompliance	If an Awardee has received prior assistance under any CDFI Fund program and if: (i) It has submitted reports to the CDFI Fund that demonstrate noncompliance with a previously executed agreement with the CDFI Fund; and (ii) the CDFI Fund has yet to make a final determination as to whether the Awardee is in default of its agreement, the CDFI Fund can delay entering into an Assistance Agreement, pending full resolution of the noncompliance issue to the CDFI Fund's satisfaction. If the Awardee is unable to satisfactorily resolve the compliance issues, the CDFI Fund may terminate and rescind the Assistance Agreement and the award made under this NOFA.
Default Status	If, at any time prior to entering into an Assistance Agreement, the CDFI Fund determines that an Awardee is in default of a previously executed agreement with the CDFI Fund and the Awardee has been provided written notification of such determination, the CDFI Fund can delay entering into an Assistance Agreement, until the Awardee has cured the default by taking actions the CDFI Fund has specified within the specified timeframe. If the Awardee is unable to meet this requirement and the CDFI Fund has not specified in writing that the Awardee is otherwise eligible to receive an award under this NOFA, the CDFI Fund may terminate and rescind the Assistance Agreement and the award made under this NOFA.
Final Default and Sanctions	If prior to entering into an Assistance Agreement under this NOFA, the CDFI Fund has: (i) Made a determination that an Awardee was in final default of an executed agreement with the CDFI Fund; and (ii) provided written notification of such final default determination to the Awardee; and (iii) the anticipated date for entering into the Assistance Agreement under this NOFA is within a period of time specified in such notification in which any new assistance is prohibited, the CDFI Fund may terminate and rescind the Assistance Agreement and the award made under this NOFA.

TABLE 11—REQUIREMENTS PRIOR EXECUTING AN ASSISTANCE AGREEMENT—Continued

Requirement	Criteria
Compliance with Federal Anti-Discrimination Laws.	If prior to entering into an Assistance Agreement under this NOFA, the Awardee receives a final determination, made within the last three years, in any proceeding instituted against the Awardee in, by, or before any court, governmental, or administrative body or agency, declaring that the Awardee has discriminated on the basis of race, color, national origin, disability, age, marital status, receipt of income from public assistance, religion, or sex, the CDFI Fund may terminate and rescind the Assistance Agreement and the award made under this NOFA.

B. *Reporting:* 1. *Reporting requirements:* At least on an annual basis, the CDFI Fund will collect information from each Awardee including, but not limited to, an Annual Report with the following components: (i) Financial Reports, (ii) OMB A–133 audit; (iii) A–133 Narrative Report; (iv) Institution Level Report; (v) Transaction Level Report (for Awardees receiving FA awards); (vi) Financial Status Report SF–425 (for Awardees receiving TA grants); (vii) Uses of Financial Assistance (for Awardees receiving FA awards); (viii) Uses of Technical Assistance (for Awardees receiving TA grants); (ix) Explanation of Noncompliance (as applicable); and (x) such other information as the CDFI Fund may require. Each Awardee is responsible for the timely and complete submission of the Annual Report, even if all or a portion of the documents is actually completed by another entity or signatory to the Assistance Agreement. If such other entities or signatories are required to provide Institution Level Reports, Transaction Level Reports, Financial Reports, or other documentation that the CDFI Fund may require, the Awardee is responsible for ensuring that the information submitted is timely and complete. The CDFI Fund reserves the right to contact such additional entities or signatories to the Assistance Agreement and require that additional information and documentation be provided. The CDFI Fund will use such information to monitor each Awardee's compliance with the requirements in the Assistance Agreement and to assess the impact of the CDFI Program. All reports with the exception of the Institution Level Report and the Transaction Level Report must be electronically submitted directly to the CDFI Fund via the Awardee's myCDFIFund account. The Institution Level Report and the Transaction Level Report must be submitted through the CDFI Fund's web-based data collection system, the Community Investment Impact System—or CIIS, accessed through the Awardee's myCDFIFund account. The CDFI Fund reserves the right, in its sole discretion, to modify these reporting requirements if it determines it to be appropriate and necessary; however, such reporting requirements will be modified only after notice to Awardees.

2. *Accounting:* The CDFI Fund will require the Awardee to account for and track the use of its award. This means that Awardees must track every dollar and must inform the CDFI Fund of its uses. This will require Awardees to establish separate administrative and accounting controls, subject to the applicable OMB Circulars. The CDFI Fund will provide guidance on the format and content of the annual information to be provided, outlining and describing how the funds were used. All Awardees are responsible for ensuring their banking account information is updated and accurate in the System for Award Management (SAM) as directed in this NOFA's Section IV. C.

VII. Agency Contacts

A. The CDFI Fund will respond to questions concerning this NOFA and the Application between the hours of 9:00 a.m. and 5:00 p.m. Eastern Time, starting on the date that the NOFA is published through three business days prior to the Application deadline. During the two business days prior to the Application deadline, the CDFI Fund will not respond to questions for Applicants until after the Application deadline. Applications and other information regarding the CDFI Fund and its programs may be obtained from the CDFI Fund's Web site at *http://www.cdfifund.gov.* The CDFI Fund will post on its Web site responses to questions of general applicability regarding the NACA Program.

B. Applicants may contact the CDFI Fund as follows:

TABLE 8—CONTACT INFORMATION

[Fax number for all offices: 202–453–2466]

Type of question	Telephone number (not toll free)	Email addresses
NACA Program	202–653–0421, option 1	*cdfihelp@cdfi.treas.gov.*
Certification, Compliance Monitoring, and Evaluation	202–653–0423	*ccme@cdfi.treas.gov.*
MyCDFIFund—IT Help Desk	202–653–0300	*IThelpdesk@cdfi.treas.gov.*

C. *Information Technology Support:* People who have visual or mobility impairments that prevent them from creating a Target Market map using the CDFI Fund's Web site should call (202) 653–0300 for assistance (this is not a toll free number).

D. *Communication with the CDFI Fund:* The CDFI Fund will use contact information in myCDFIFund to communicate with Applicants and Awardees. It is imperative; therefore, that Applicants, Awardees, Subsidiaries, Affiliates, and signatories maintain accurate contact information in their accounts. This includes information like contact names, especially for the authorized representative; email addresses; fax and phone numbers; and office locations. For more information about myCDFIFund, as well as information on the Community Investment Impact System, please see the following Web site: *http://www.cdfifund.gov/what_we_do/ciis.asp.*

VIII. Information Sessions and Outreach

The CDFI Fund may conduct webinars or host information sessions for organizations that are considering applying to, or are interested in learning about, the CDFI Fund's programs. For further information, please visit the CDFI Fund's Web site at *http://www.cdfifund.gov.*

Authority: 12 U.S.C. 4701, et seq; 12 CFR parts 1805 and 1815.

Dated: October 23, 2013.

Donna J. Gambrell,

Director, Community Development Financial Institutions Fund.

[FR Doc. 2013–25949 Filed 10–30–13; 8:45 am]

BILLING CODE 4810–70–P

DEPARTMENT OF VETERANS AFFAIRS

[OMB Control No. 2900–NEW]

Agency Information Collection (Non-Degenerative Arthritis (Including Inflammatory, Autoimmune, Crystalline and Infectious Arthritis) and Dysbaric Osteonecrosis Disability Benefits Questionnaire) Activity Under OMB Review

AGENCY: Veterans Benefits Administration, Department of Veterans Affairs.

ACTION: Notice.

SUMMARY: In compliance with the Paperwork Reduction Act (PRA) of 1995 (44 U.S.C. 3501–3521), this notice announces that the Veterans Benefits Administration (VBA), Department of Veterans Affairs, will submit the collection of information abstracted below to the Office of Management and Budget (OMB) for review and comment. The PRA submission describes the nature of the information collection and its expected cost and burden; it includes the actual data collection instrument.

DATES: Comments must be submitted on or before December 2, 2013.

ADDRESSES: Submit written comments on the collection of information through *www.Regulations.gov,* or to Office of Information and Regulatory Affairs, Office of Management and Budget, Attn: VA Desk Officer; 725 17th St. NW., Washington, DC 20503 or sent through electronic mail to *oira_submission@omb.eop.gov.* Please refer to ''OMB Control No. 2900–NEW (Non-Degenerative Arthritis (including inflammatory, autoimmune, crystalline and infectious arthritis) and Dysbaric Osteonecrosis Disability Benefits Questionnaire)'' in any correspondence.

FOR FURTHER INFORMATION CONTACT: Crystal Rennie, Enterprise Records Service (005R1B), Department of Veterans Affairs, 810 Vermont Avenue NW., Washington, DC 20420, (202) 632–7492 or email *crystal.rennie@.va.gov.* Please refer to ''OMB Control No. 2900–NEW (Non-Degenerative Arthritis (including inflammatory, autoimmune, crystalline and infectious arthritis) and Dysbaric Osteonecrosis Disability Benefits Questionnaire).''

SUPPLEMENTARY INFORMATION:

Title: Non-Degenerative Arthritis (including inflammatory, autoimmune, crystalline and infectious arthritis) and Dysbaric Osteonecrosis Disability Benefits Questionnaire, VA Form 21–0960M–3.

OMB Control Number: 2900–NEW (Non-Degenerative Arthritis (including inflammatory, autoimmune, crystalline and infectious arthritis) and Dysbaric Osteonecrosis Disability Benefits Questionnaire).

Type of Review: New data collection.

Abstract: The VA Form 21–0960M–3, *Non-Degenerative Arthritis (including inflammatory, autoimmune, crystalline and infectious arthritis) and Dysbaric Osteonecrosis Disability Benefits Questionnaire* will be used for disability compensation or pension claims which require an examination and/or receiving private medical evidence that may potentially be sufficient for rating purposes. The form will be used to gather necessary information from a claimant's treating physician regarding the results of medical examinations and related to the claimant's diagnosis of a non-degenerative arthritis or osteonecrosis condition. VA will gather medical information related to the claimant that is necessary to adjudicate the claim for VA disability benefits.

An agency may not conduct or sponsor, and a person is not required to respond to a collection of information unless it displays a currently valid OMB control number. The **Federal Register** Notice with a 60-day comment period soliciting comments on this collection of information was published on June 17, 2013, at pages 36305–36306.

Affected Public: Individuals or households.

Estimated Annual Burden: 25,000.

Estimated Average Burden per Respondent: 15 minutes.

Frequency of Response: On occasion.

Estimated Number of Respondents: 100,000.

Dated: October 28, 2013.

By direction of the Secretary.

Crystal Rennie,

VA Clearance Officer, Department of Veterans Affairs.

[FR Doc. 2013–25940 Filed 10–30–13; 8:45 am]

BILLING CODE 8320–01–P

DEPARTMENT OF VETERANS AFFAIRS

[OMB Control No. 2900–0059]

Proposed Information Collection (Statement of Person Claiming To Have Stood in Relation of a Parent) Activity: Comment Request

AGENCY: Veterans Benefits Administration, Department of Veterans Affairs.

ACTION: Notice.

SUMMARY: The Veterans Benefits Administration (VBA), Department of Veterans Affairs (VA), is announcing an opportunity for public comment on the proposed collection of certain information by the agency. Under the Paperwork Reduction Act (PRA) of 1995, Federal agencies are required to publish notice in the **Federal Register** concerning each proposed collection of information, including each proposed revision of a currently approved collection and allow 60 days for public comment in response to the notice. This notice solicits comments on information needed to determine a claimant's who stood in relation of parents to a deceased Veteran eligibility for death benefits.

DATES: Written comments and recommendations on the proposed collection of information should be received on or before December 30, 2013.

ADDRESSES: Submit written comments on the collection of information through Federal Docket Management System (FDMS) at *www.Regulations.gov* or to Nancy J. Kessinger, Veterans Benefits Administration (20M35), Department of Veterans Affairs, 810 Vermont Avenue NW., Washington, DC 20420 or email to *nancy.kessinger@va.gov.* Please refer to ''OMB Control No. 2900–0059'' in any correspondence. During the comment period, comments may be viewed online through FDMS.

FOR FURTHER INFORMATION CONTACT: Nancy J. Kessinger at (202) 632–8924 or FAX (202) 632–8925.

SUPPLEMENTARY INFORMATION: Under the PRA of 1995 (Pub. L. 104–13; 44 U.S.C. 3501–3521), Federal agencies must obtain approval from the Office of Management and Budget (OMB) for each collection of information they conduct

or sponsor. This request for comment is being made pursuant to Section 3506(c)(2)(A) of the PRA.

With respect to the following collection of information, VBA invites comments on: (1) Whether the proposed collection of information is necessary for the proper performance of VBA's functions, including whether the information will have practical utility; (2) the accuracy of VBA's estimate of the burden of the proposed collection of information; (3) ways to enhance the quality, utility, and clarity of the information to be collected; and (4) ways to minimize the burden of the collection of information on respondents, including through the use of automated collection techniques or the use of other forms of information technology.

Title: Statement of Person Claiming to Have Stood in Relation of a Parent, VA Form 21P–524.

OMB Control Number: 2900–0059.

Type of Review: Revision of a currently approved collection.

Abstract: VA Form 21P–524 is used to gather information from claimants seeking service-connected death benefits as persons who stood in the relationship of the natural parent of a deceased Veteran. The information is used to determine the claimant's eligibility for such benefits.

Affected Public: Individuals or households.

Estimated Annual Burden: 800 hours.

Estimated Average Burden per Respondent: 2 hours.

Frequency of Response: One-time.

Estimated Number of Respondents: 400.

Dated: October 22, 2013.

By direction of the Secretary.

Crystal Rennie,

VA Clearance Officer, Department of Veterans Affairs.

[FR Doc. 2013–25858 Filed 10–30–13; 8:45 am]

BILLING CODE 8320–01–P

DEPARTMENT OF VETERANS AFFAIRS

[OMB Control No. 2900–NEW]

Agency Information Collection (Shoulder and Arm Conditions Disability Benefits Questionnaire) Activity Under OMB Review

AGENCY: Veterans Benefits Administration, Department of Veterans Affairs.

ACTION: Notice.

SUMMARY: In compliance with the Paperwork Reduction Act (PRA) of 1995 (44 U.S.C. 3501–3521), this notice announces that the Veterans Benefits Administration (VBA), Department of Veterans Affairs, will submit the collection of information abstracted below to the Office of Management and Budget (OMB) for review and comment. The PRA submission describes the nature of the information collection and its expected cost and burden; it includes the actual data collection instrument.

DATES: Comments must be submitted on or before December 2, 2013.

ADDRESSES: Submit written comments on the collection of information through *www.Regulations.gov,* or to Office of Information and Regulatory Affairs, Office of Management and Budget, Attn: VA Desk Officer; 725 17th St. NW., Washington, DC 20503 or sent through electronic mail to *oira_submission@omb.eop.gov.* Please refer to ''OMB Control No. 2900–NEW (Shoulder and Arm Conditions Disability Benefits Questionnaire)'' in any correspondence.

FOR FURTHER INFORMATION CONTACT: Crystal Rennie, Enterprise Records Service (005R1B), Department of Veterans Affairs, 810 Vermont Avenue NW., Washington, DC 20420, (202) 632–7492 or email *crystal.rennie@.va.gov.* Please refer to ''OMB Control No. 2900–NEW (Shoulder and Arm Conditions Disability Benefits Questionnaire).''

SUPPLEMENTARY INFORMATION:

Title: (Shoulder and Arm Conditions Disability Benefits Questionnaire), VA Form 21–0960M–12.

OMB Control Number: 2900–NEW (Shoulder and Arm Conditions Disability Benefits Questionnaire).

Type of Review: New data collection.

Abstract: The VA Form 21–0960M–12, *Shoulder and Arm Conditions Disability Benefits Questionnaire,* will be used for disability compensation or pension claims which require an examination and/or receiving private medical evidence that may potentially be sufficient for rating purposes. The form will be used to gather necessary information from a claimant's treating physician regarding the results of medical examinations and information related to the claimant's diagnosis of a shoulder or arm condition. VA will gather medical information related to the claimant that is necessary to adjudicate the claim for VA disability benefits.

An agency may not conduct or sponsor, and a person is not required to respond to a collection of information unless it displays a currently valid OMB control number. The **Federal Register** Notice with a 60-day comment period soliciting comments on this collection of information was published on June 17, 2013, at pages 36307–36308.

Affected Public: Individuals or Households.

Estimated Annual Burden: 25,000.

Estimated Average Burden per Respondent: 30 minutes.

Frequency of Response: On occasion.

Estimated Number of Respondents: 50,000.

Dated: October 28, 2013.

By direction of the Secretary.

Crystal Rennie,

VA Clearance Officer, Department of Veterans Affairs.

[FR Doc. 2013–25945 Filed 10–30–13; 8:45 am]

BILLING CODE 8320–01–P

DEPARTMENT OF VETERANS AFFAIRS

[OMB Control No. 2900–NEW]

Agency Information Collection (Neck (Cervical Spine) Conditions Disability Benefits Questionnaire) Activity Under OMB Review

AGENCY: Veterans Benefits Administration, Department of Veterans Affairs.

ACTION: Notice.

SUMMARY: In compliance with the Paperwork Reduction Act (PRA) of 1995 (44 U.S.C. 3501–3521), this notice announces that the Veterans Benefits Administration (VBA), Department of Veterans Affairs, will submit the collection of information abstracted below to the Office of Management and Budget (OMB) for review and comment. The PRA submission describes the nature of the information collection and its expected cost and burden; it includes the actual data collection instrument.

DATES: Comments must be submitted on or before December 2, 2013.

ADDRESSES: Submit written comments on the collection of information through *www.Regulations.gov,* or to Office of Information and Regulatory Affairs, Office of Management and Budget, Attn: VA Desk Officer; 725 17th St. NW., Washington, DC 20503 or sent through electronic mail to *oira_submission@omb.eop.gov.* Please refer to ''OMB Control No. 2900—NEW (Neck (Cervical Spine) Conditions Disability Benefits Questionnaire)'' in any correspondence.

FOR FURTHER INFORMATION CONTACT: Crystal Rennie, Enterprise Records Service (005R1B), Department of Veterans Affairs, 810 Vermont Avenue NW., Washington, DC 20420, (202) 632–7492 or email *crystal.rennie@.va.gov.* Please refer to ''OMB Control No. 2900–

NEW (Neck (Cervical Spine) Conditions Disability Benefits Questionnaire).''

SUPPLEMENTARY INFORMATION:

Title: (Neck (Cervical Spine) Conditions Disability Benefits Questionnaire). Disability Benefits Questionnaire, VA Form 21–0960M–13.

OMB Control Number: 2900—NEW ((Neck (Cervical Spine) Conditions Disability Benefits Questionnaire).

Type of Review: New data collection.

Abstract: The VA Form 21–0960M–13, *Neck (Cervical Spine) Conditions Disability Benefits Questionnaire,* will be used for disability compensation or pension claims which require an examination and/or receiving private medical evidence that may potentially be sufficient for rating purposes. The form will be used to gather necessary information from a claimant's treating physician regarding the results of medical examination and related to the claimant's diagnosis of a cervical spine condition. VA will gather medical information related to the claimant that is necessary to adjudicate the claim for VA disability benefits.

An agency may not conduct or sponsor, and a person is not required to respond to a collection of information unless it displays a currently valid OMB control number. The **Federal Register** Notice with a 60-day comment period soliciting comments on this collection of information was published on June 17, 2013, at pages 36306–36307.

Affected Public: Individuals or Households.

Estimated Annual Burden: 37,500.

Estimated Average Burden per Respondent: 45 minutes.

Frequency of Response: On occasion.

Estimated Number of Respondents: 50,000.

Dated: October 28, 2013.

By direction of the Secretary.

Crystal Rennie,

VA Clearance Officer, Department of Veterans Affairs.

[FR Doc. 2013–25941 Filed 10–30–13; 8:45 am]

BILLING CODE 8320–01–P

DEPARTMENT OF VETERANS AFFAIRS

[OMB Control No. 2900–NEW]

Proposed Information Collection (Veterans, Researchers, and IRB Members Experiences With Recruitment Restrictions); Comment Request

AGENCY: Veterans Health Administration, Department of Veterans Affairs.

ACTION: Notice.

SUMMARY: The Veterans Health Administration (VHA), Department of Veterans Affairs (VA), is announcing an opportunity for public comment on the proposed collection of certain information by the agency. Under the Paperwork Reduction Act (PRA) of 1995, Federal agencies are required to publish notice in the **Federal Register** concerning each proposed collection of information, including each proposed new collection, and allow 60 days for public comment in response to the notice. This notice solicits comments for information needed conduct a study to examine whether current VA Institutional Review Board (IRB) policies pose barriers to recruitment of research study subjects and to explore Veterans views on recruitment procedures.

DATES: Written comments and recommendations on the proposed collection of information should be received on or before December 30, 2013.

ADDRESSES: Submit written comments on the collection of information through the Federal Docket Management System (FDMS) at *www.Regulations.gov;* or to Cynthia Harvey-Pryor, Veterans Health Administration (10B4), Department of Veterans Affairs, 810 Vermont Avenue NW., Washington, DC 20420 or email: *cynthia.harvey-pryor@va.gov.* Please refer to ''OMB Control No. 2900–NEW (Veterans, Researchers, and IRB Members Experiences with Recruitment Restrictions)'' in any correspondence. During the comment period, comments may be viewed online through FDMS.

FOR FURTHER INFORMATION CONTACT: Cynthia Harvey-Pryor at (202) 461–5870 or Fax (202) 495–5397.

SUPPLEMENTARY INFORMATION: Under the PRA of 1995 (Pub. L. 104–13; 44 U.S.C. 3501–21), Federal agencies must obtain approval from the Office of Management and Budget (OMB) for each collection of information they conduct or sponsor. This request for comment is being made pursuant to Section 3506(c)(2)(A) of the PRA.

With respect to the following collection of information, VHA invites comments on: (1) Whether the proposed collection of information is necessary for the proper performance of VHA's functions, including whether the information will have practical utility; (2) the accuracy of VHA's estimate of the burden of the proposed collection of information; (3) ways to enhance the quality, utility, and clarity of the information to be collected; and (4) ways to minimize the burden of the collection of information on respondents, including through the use of automated collection techniques or the use of other forms of information technology.

Title: Veterans, Researchers, and IRB Members Experiences with Recruitment Restrictions.

OMB Control Number: 2900—NEW (Veterans, Researchers, and IRB Members Experiences with Recruitment Restrictions).

Type of Review: New collection.

Abstracts: The VHA Office of Research Development has launched a Research Best Practices initiative to study ways to improve the conduct of research within the VA. All study data will be analyzed by the investigators using qualitative research methods to understand Veterans' preferences on research recruitment methods. The data will be published in peer-review medical literature and presented at the HSR&D national meeting, if accepted for such.

Affected Public: Individuals or households.

Estimated Annual Burden: 192.

Estimated Average Burden per Respondent: 120 minutes.

Frequency of Response: Once.

Estimated Number of Respondents: 96.

Dated: October 28, 2013.

By direction of the Secretary.

Crystal Rennie,

VA Clearance Officer, Department of Veterans Affairs.

[FR Doc. 2013–25859 Filed 10–30–13; 8:45 am]

BILLING CODE 8320–01–P

FEDERAL REGISTER

Vol. 78 Thursday,

No. 211 October 31, 2013

Part II

Department of Transportation

Pipeline and Hazardous Materials Safety Administration

49 CFR Parts 171, 172, 173, et al.

Hazardous Materials: Corrections and Response to Administrative Appeals (HM–215K, HM–215L, HM–218G and HM–219); Final Rule

DEPARTMENT OF TRANSPORTATION

Pipeline and Hazardous Materials Safety Administration

49 CFR Parts 171, 172, 173, 175, 176, and 178

[Docket No. PHMSA–2013–0041]

RIN 2137–AF01

Hazardous Materials: Corrections and Response to Administrative Appeals (HM–215K, HM–215L, HM–218G and HM–219).

AGENCY: Pipeline and Hazardous Materials Safety Administration (PHMSA), DOT.

ACTION: Final rule.

SUMMARY: This final rule corrects editorial errors and amends certain requirements in response to administrative appeals submitted by persons affected by certain final rules published in the **Federal Register**.

DATES: *Effective date:* The effective date of this document is October 31, 2013.

Voluntary compliance date: PHMSA is authorizing voluntary compliance beginning October 31, 2013.

Delayed compliance date: Unless otherwise specified, compliance with the amendments adopted in this final rule is required beginning January 1, 2014.

Incorporation by reference date: The incorporation by reference of certain publications listed in this rule is approved by the Director of the Federal Register as of October 31, 2013.

FOR FURTHER INFORMATION CONTACT: Aaron Wiener or Shane Kelley, International Standards, telephone (202) 366–8553, Pipeline and Hazardous Materials Safety Administration, U.S. Department of Transportation, 1200 New Jersey Avenue SE., 2nd Floor, Washington, DC 20590–0001.

SUPPLEMENTARY INFORMATION: This final rule corrects editorial errors and amends certain requirements in response to administrative appeals submitted by persons affected by the final rules published under Docket Numbers: PHMSA–2009–0126 (HM–215K) [78 FR 1101], PHMSA–2012–0027 (HM–215L) [78 FR 987], PHMSA–2011–0138 (HM–218G) [78 FR 15303], and PHMSA–2011–0142 (HM–219) [78 FR 14702.]

I. Background
A. HM–215K and HM–215L
B. HM–218G
C. HM–219
II. Administrative Appeals
A. HM–215K
B. HM–215L
C. HM–219
III. Section-by-Section Review of Changes
IV. Regulatory Analyses and Notices
A. Statutory/Legal Authority for the Rulemaking
B. Executive Orders 12866 and 13563 and DOT Regulatory Policies and Procedures
C. Executive Order 13132
D. Executive Order 13175
E. Regulatory Flexibility Act, Executive Order 13272, and DOT Policies and Procedures
F. Paperwork Reduction Act
G. Regulatory Identifier Number (RIN)
H. Unfunded Mandates Reform Act
I. Environmental Assessment
J. Privacy Act
K. Executive Order 13609 and International Trade Analysis

I. Background

A. HM–215K and HM–215L

On January 7, 2013, the Pipeline and Hazardous Materials Safety Administration (PHMSA) published final rules under Docket Numbers PHMSA–2009–0126 (HM–215K) [78 FR 1101] and PHMSA–2012–0027 (HM–215L) [78 FR 987] to maintain alignment with international standards by incorporating various amendments, including changes to proper shipping names, hazard classes, packing groups, special provisions, packaging authorizations, air transport quantity limitations, and vessel stowage requirements. These revisions were necessary to harmonize the Hazardous Materials Regulations (HMR; 49 CFR parts 171–180) with recent changes made to the International Maritime Dangerous Goods Code (IMDG), the International Civil Aviation Organization's Technical Instructions for the Safe Transport of Dangerous Goods by Air (ICAO TI), and the United Nations Recommendations on the Transport of Dangerous Goods—Model Regulations (UN Model Regulations). This final rule responds to four appeals and certain comments concerning amendments in the January 7, 2013 final rules. This rulemaking also corrects various errors made during the development of the rule and the printing process. Because the amendments adopted herein impose no new regulatory burden on any person, these amendments are being made effective without the usual 30-day delay following publication. In addition, because these amendments do not impose new requirements, notice and public comment procedures are unnecessary.

B. HM–218G

On April 26, 2012, PHMSA published an NPRM under Docket PHMSA 2011–0138 [77 FR 24885] (HM–218G) that proposed amendments to update and clarify existing requirements of the HMR. The NPRM and the March 11, 2013 final rule are part of the Department of Transportation's (DOT) Retrospective Regulatory Review (RRR) designed to identify ways to improve the HMR. The NPRM proposed amendments to update and clarify existing requirements by incorporating changes into the HMR based on PHMSA initiatives. We identified the proposed amendments through an extensive review of the HMR and letters of interpretation that we had previously issued. In addition, the NPRM proposed to incorporate a special permit with a longstanding history of safety into the HMR, and included a response to a petition for rulemaking. This rulemaking makes editorial changes to correct errors made during the development of the HM–218G rule.

C. HM–219

On May 24, 2012, PHMSA published an NPRM under Docket PHMSA 2011–0142 [77 FR 30976] (HM–219). The NPRM and the March 7, 2013 final rule are part of the DOT's RRR designed to identify ways to improve the HMR. The Administrative Procedure Act (APA) requires Federal agencies to give interested persons the right to petition an agency to issue, amend, or repeal a rule (5 U.S.C. 553(e)). Under PHMSA's rulemaking procedures, you can request a change to the HMR. 49 CFR 106.95 permits you to ask PHMSA to add, amend, or delete a regulation by filing a petition for rulemaking containing adequate support for the requested action. In the NPRM, we responded to eight petitions for rulemaking submitted to us by various stakeholders. We proposed to amend the HMR to update, clarify, or provide relief from miscellaneous regulatory requirements at the request of the regulated community. This rulemaking responds to administrative appeals and makes editorial corrections.

II. Administrative Appeals

A. HM–215K

In response to the January 7, 2013 final rule, HMT Associates, L.L.C. (HMT) submitted an administrative appeal as follows:

1. Revised § 173.167 and Reference Therein to § 173.27(f)(2)

In the January 7, 2013 final rule, PHMSA revised section 173.167 for consistency with the ICAO TI. Specifically, the amendments were intended to mirror the stand-alone closure requirements and other provisions prescribed in Packing

Instruction Y963 of the ICAO TI applicable to consumer commodities prepared and intended for transportation by aircraft. In order to accomplish this, packages of consumer commodities prepared under the provisions of § 173.167 required exclusion from the provisions of Subpart B of Part 173 (to include § 173.27).

PHMSA Response:

In its administrative appeal, HMT correctly points out that the revisions to § 173.167 in the January 7, 2013 final rule inadvertently provided the opposite effect by excepting such packages from the requirements of Subpart B of Part 173 *except for § 173.27(f)(2)* (emphasis added). Therefore, a correction is necessary and warranted because § 173.27(f)(2)(iv) requires a secondary means of closure for combination packages of liquid limited quantity material. Thus, we are granting HMT's administrative appeal and revise §§ 173.24(i) and 173.167 accordingly for consumer commodities described under ID8000.

2. Export Shipments of Consumer Commodities (ID8000)

As previously stated, in the January 7, 2013 final rule, § 173.167 was revised for consistency with the consumer commodity (ID8000) provisions under Packing Instruction Y963 of the ICAO TI. As a result, unintended consequences were forced upon U.S. exporters of such articles and substances. For example, in its administrative appeal, HMT points out that an exporter must comply with:

- Section 171.22(g)(5) when using international standards to prepare shipments;
- Section 171.22(g)(5) prescribes compliance with the general packaging requirements in §§ 173.24 and 173.24(a);
- Section 173.24(i) prescribes compliance with § 173.27; and
- Section 173.27 requires a secondary means of closure on inner packagings of combination packages containing liquids. Such a requirement is inconsistent with Packing Instruction Y963 of the ICAO TI.

PHMSA Response:

We agree with HMT. In this final rule, we are granting its administrative appeal by revising §§ 173.24(i) and 173.167. Consequently, revising § 171.22(g)(5) is not necessary.

B. HM–215L

In response to the January 7, 2013 final rule, administrative appeals were submitted by the following companies and organizations:

Dangerous Goods Advisory Council, Inc. (DGAC).
Kilofarad International.
Sporting Arms & Ammunition Manufacturer's Institute (SAAMI).

These administrative appeals are discussed in detail below.

1. Lithium Cell and Battery Design Tests

PHMSA received one administrative appeal from DGAC related to our adoption of Amendment 1 to the 5th revised edition of the UN Manual of Tests and Criteria. Specifically, DGAC is concerned that we did not provide in § 173.185(a)(1) for the continued manufacture of lithium cells and batteries of a type tested in accordance with the 5th revised edition of the UN Manual of Tests and Criteria. The DGAC appeal says that this action would seem to require that all cells and batteries first transported after January 1, 2006, will have to be of a type tested in conformance with the newly incorporated edition of the UN Manual of Tests and Criteria.

DGAC recommends that PHMSA clarify that, irrespective of the January 1, 2006 date in § 173.185(a)(1), newly manufactured cells and batteries of a type successfully tested to the UN Manual of Tests and Criteria, 3rd revised edition, Amendment 1, or a later edition, may be transported without the need for the cell or battery type to be retested and that cells and batteries already distributed and tested to a previous edition of the UN Manual of Tests and Criteria may continue to be transported.

PHMSA Response:

DGAC correctly points out that we did not, consistent with previous practice, include a grandfather provision for cells and batteries of a type that meets the 5th revised edition. While this does not change our intent to continue to permit the continued manufacture and transportation of lithium cells and batteries of a type meeting the requirements of a previously authorized edition of the UN Manual of Tests and Criteria, we agree this may result in confusion and unnecessary retesting of previously validated designs.

In this final rule, we are accepting DGAC's appeal. We are adopting its recommendation by adding a clarifying amendment to § 173.185. This amendment will provide a straightforward means of permitting the continued manufacture and transport of lithium cell and battery designs that were tested in accordance with the version of the UN Manual of Tests and Criteria effective when the cell/battery was first manufactured.

2. Capacitors

PHMSA received administrative appeals from DGAC and Kilofarad International relating to § 173.176. This section was added in the January 7, 2013 final rule (HM–215L) and prescribes the requirements for capacitors. DGAC and Kilofarad International contend that § 173.176 does not align with the ICAO TI, in that an exception for short circuit protection for a capacitor, or a capacitor in a module with an energy storage capacity less than or equal to 10 Wh, provided in special provision of A186 of the ICAO TI, is not provided in § 173.176.

PHMSA Response:

Upon review, we agree and grant the appeals of DGAC and Kilofarad International as they pertain to § 173.176. In this final rule, we are correcting this oversight by revising paragraphs (a)(2)(i) and (a)(2)(ii) of § 173.176 to maintain consistency with the ICAO TI. A detailed discussion of this change is included in the Section-by-Section Review for § 173.176.

3. Class 1 Appeal (Various)

PHMSA received an administrative appeal from SAAMI regarding various amendments in HM–215L made to requirements for transporting certain Class 1 (explosive) materials. The SAAMI appeal consists of eight separate issues that are summarized and discussed below.

SAAMI notes that in HM–215L the word ''None'' was removed from Column (6) label codes and replaced with ''1.4S'' for the entries for UN0012, ''Cartridges, small arms'' and UN0014, ''Cartridges, small arms, blank'' in the Hazardous Materials Table (HMT). SAAMI notes that there was no discussion of this change in the preamble to the final rule and that the change was not proposed in the NPRM. SAAMI asks if these changes were inadvertent. We acknowledge that there were inadvertent changes, and therefore we are putting the word ''None'' back in Column (6) for these two entries.

SAAMI states that for the HMT entry UN0323, ''Cartridges, power device'' the reference to § 173.63 was removed from Column (8A) and replaced with the word ''None.'' SAAMI requests that PHMSA reinsert the reference to § 173.63 in Column (8A), as the removal of this reference breaks the connection to the ORM–D provisions for this table entry. We agree, and we will reinsert the reference.

In HM–215L, several changes were made to the ''Cartridges, small arms'' and ''Cartridges, power device'' HMT entries to ensure these articles would

not be offered as ORM–D–AIR shipments. These HMT entries had Column (9B) quantity limitations for cargo aircraft revised from ''30 kg'' to ''Forbidden'' and a new Special Provision 222 was assigned, which states that shipments offered for transport by aircraft may not be reclassed as ORM–D. SAAMI notes in its appeal that these changes were not applied consistently to all ORM–D entries in the HMT, and requests we make similar changes to the ORM–D ''Consumer commodity'' HMT entry for consistency. We agree, and we are amending the HMT entry for ''Consumer commodity'' by adding Special Provision 222 to Column (7) and replacing ''30 kg'' with ''Forbidden'' in Column (9B).

SAAMI requests that the word ''None'' should be deleted and left blank in Column (4) for the ORM–D ''Cartridges, power device'' entry to be consistent with the ORM–D entries for ''Cartridges, small arms'' and ''Consumer commodity''. We agree and we will delete the word ''None'' and leave the column blank for this entry.

SAAMI notes that the packing group entries in Column (5) for UN0501 and UN0509 in the HMT are blank, but for consistency with the other Class 1 (explosive) entries these should be changed to ''II''. We agree, and we are granting SAAMI's appeal on this issue.

The SAAMI appeal asks that we clarify section 173.63(b) to ensure the terms ''Cartridges, power device (used to project fastening devices) and ''Cartridges, power device,'' are appropriately identified within the section. We agree that some clarifying amendments are needed to § 173.63 to ensure proper shipment of ''Cartridges, power device'' and ''Cartridges, power device (used to project fastening devices).''

SAAMI requests that clarifying text be added to indicate that packages properly prepared in accordance with the requirements of § 173.63(b) receive relief from the loading limits in § 175.75. It was never our intent to subject these shipments to these requirements when they have historically received relief from the accessibility requirements of § 175.75. A shipment of UN0012, UN0014, or UN0055 properly packaged and marked in accordance with § 173.63(b), is excepted from the requirements of § 175.75(c) and (e)(1) if it is declared on air transport shipping papers as a limited quantity or not. We agree, and we are granting SAAMI's appeal on this issue by amending the list of materials that are excepted from the inaccessible loading limits in § 175.75.

SAAMI contends that the following language, added to § 173.63 in the January 7, 2013 final rule (HM–215L), constitutes a new requirement for limited quantities of small arms ammunition to be marked with the proper shipping when transported by air that was not required by the final rule published on January 19, 2011 (76 FR 3308, HM–215K):

> In addition, packages containing such articles offered for transportation by aircraft must be marked with the proper shipping name as prescribed in the § 172.101 Hazardous Materials Table of this subchapter.

We disagree. The addition of the above language in the January 7, 2013 final rule (HM–215L) clarified that for transportation by air, these articles are required to be marked with the proper shipping name. This clarification did not impose a new or additional marking requirement. The requirement for packages containing these articles to be marked with the proper shipping name, when transported by air, was included in the January 19, 2011 (76 FR 3308, HM–215K) final rule, which provided in § 173.63, ''Packages containing such articles must be marked as prescribed in § 172.315.'' Section 172.315(a) further provides, ''Except for transportation by aircraft or as otherwise provided in this subchapter, a package containing a limited quantity of hazardous material is not required to be marked with the proper shipping name and identification (ID) number when marked in accordance with the white square-on-point limited quantity marking * * *'' It is clear that under the final rule published on January 19, 2011 (76 FR 3308, HM–215K), packages containing these articles were not excepted from the requirement to be marked with the proper shipping name when transported by air. In addition, this requirement is consistent with the ICAO TI that also requires packages containing these articles to be marked with the proper shipping name. Accordingly, we are denying SAAMI's appeal as it relates to this issue.

C. HM–219

In response to the March 7, 2013 final rule, administrative appeals were submitted by the following companies and organizations:

DGAC.
SAAMI.
Reusable Industrial Packing Association (RIPA).

1. Smokeless Powder, Division 1.4C (P–1559)

Section 173.171 of the HMR allows smokeless powder for small arms that has been classed as Division 1.3C (Explosive) to be reclassed for domestic transportation as a Division 4.1 (Flammable Solid) material for transportation by motor vehicle, rail car, vessel, or cargo-only aircraft, subject to certain conditions. In a final rule published on January 14, 2009 under Docket Nos. PHMSA–2007–0065 (HM–224D) and PHMSA–2008–0005 (HM–215J), we added a new description to the HMT for UN0509, ''Powder, smokeless, Division 1.4C.'' However, the rulemaking did not extend the exception provided for Division 1.3C in § 173.171 to Division 1.4C materials.

SAAMI, in a petition (P–1559), requested that we amend § 173.171 to allow Division 1.4C smokeless powder to be reclassed as a Division 4.1 material. SAAMI sought, with proper examination and approval, to allow a Division 1.4C material which, by definition (see § 173.50), poses the lesser safety risk when compared with Division 1.3 explosives, to be reclassed as a Division 4.1 material.

We included SAAMI's proposal, with some modifications, in the HM–219 NPRM. The petition asked that we amend § 173.171(a) by adding the text ''and 1.4C'' after the text ''1.3.'' In the HM–219 NPRM, we revised § 173.171 to address Division 1.4C explosives and added a new separate paragraph for Division 1.4C explosives to ensure that the allowable net mass in the combination packagings did not exceed the net mass of the material that had been examined and approved. In addition, we proposed to revise Special Provision 16 in § 172.102 to reflect the addition of Division 1.4C explosives. We received a comment to the NPRM from SAAMI stating that they:

> [H]ave studied this proposed change, and find that the sole effect is to allow a flammable solid which emanated from a Division 1.4 classification to exceed the current eight pound limit per inner package. Unless a need for this change is substantiated, we see no reason why the flammable solid classification limit for inner packages should be amended. Furthermore this would be unenforceable in the field.

We considered this and the other comments to the NPRM, and published a final rule on March 7, 2013, under Docket Number PHMSA–2011–0142 (HM–219). With regard to the amendments adopted in the final rule for smokeless powder for small arms we modified the amendments proposed in the NPRM as follows:

- Special Provision 16 of § 172.102 was revised to read: ''This description applies to smokeless powder and other propellant powders that are used as powder for small arms and have been

classed as Division 1.3C and 1.4C and reclassed to Division 4.1 in accordance with § 173.56 and § 173.58 of this subchapter.''

• The introductory paragraph of § 173.171 was revised to read: ''Powders that have been classed in Division 1.3 or Division 1.4C may be reclassed in Division 4.1, for domestic transportation by motor vehicle, rail car, vessel, or cargo-only aircraft, subject to the following conditions.''

• Section 173.171(a) was revised to read: ''Powders that have been approved as Division 1.3C or Division 1.4C may be reclassed to Division 4.1 in accordance with §§ 173.56 and 173.58 of this part.''

• Section 173.171(c) was revised to read: ''Only combination packagings with inner packagings not exceeding 3.6 kg (8 pounds) net mass and outer packaging of UN 4G fiberboard boxes meeting the Packing Group I standards are authorized. Inner packagings must be arranged and protected so as to prevent simultaneous ignition of the contents. The complete package must be of the same type that has been examined as required in § 173.56 of this part.''

• Section 173.171(d) was revised to read: ''The net weight of smokeless powder in any one box (one package) must not exceed 7.3 kg (16 pounds).''

PHMSA Response:

On March 17, 2013, SAAMI submitted an appeal to the regulatory changes adopted in the HM–219 final rule with respect to smokeless powder. SAAMI requested that we remove ''all changes in the final rule which were not in the proposed rule, except those changes which deleted extraneous text from the proposed rule in response to SAAMI's comments.'' SAAMI also noted in its appeal that HM–219 inadvertently showed ''Forbidden'' in Column (9B) in conjunction with the listing in the HMT for UN0509, ''Smokeless powder, Division 1.4C.''

SAAMI appealed the wording in the HM–219 final rule of Special Provision 16. It indicated that it should read as it did in the NPRM, which was: ''[t]his description applies to smokeless powder and other solid propellants that are used as powder for small arms and have been classed as Division 1.3, 1.4 and 4.1 in accordance with § 173.56 of this subchapter.'' We revised Special Provision 16 in the final rule because it was our intent to clearly indicate that only smokeless powder or propellant in powder form may qualify for reclassification as Division 4.1, and ensure that powders that have hazard properties different from ''propellants'' could not be reclassified into Division 4.1. SAAMI indicated that the introductory text in § 173.171 should read as follows:

> Smokeless powder for small arms which has been classed in Division 1.3 or Division 1.4 may be reclassed in Division 4.1, for domestic transportation by motor vehicle, rail car, vessel, or cargo-only aircraft, subject to the following conditions:

As with Special Provision 16, by changing the terminology in the final rule from ''solid propellants'' to ''propellant powders'' it was our intent to clearly indicate that only smokeless powder or propellant in powder form may qualify for reclassification as Division 4.1, and we wanted to ensure that powders that have hazard properties different from ''propellants'' could not be reclassified into Division 4.1. In the HM–219 final rule, we had revised the language in § 173.171(a) to read: ''Powders that have been approved as Division 1.3C or Division 1.4C may be reclassed to Division 4.1 in accordance with §§ 173.56 and 173.58 of this part.'' SAAMI indicated that § 173.171(a) should read:

> (a) The powder must be examined and approved for a Division 1.3 or Division 1.4 and Division 4.1 classification in accordance with §§ 173.56 and 173.58 of this part.

As indicated in the HM–219 final rule, our intent with the revision to §§ 173.171(c) and 173.171(d) was to ensure that the allowable net mass did not exceed the net mass of the material that had been examined and approved. The consequences of the revision detailed in SAAMI's appeal were unintentional. SAAMI indicated that the amendments to §§ 173.171(c) and 173.171(d) should be retracted. They state:

> The deletion of text in paragraph (d) ignores [that paragraph (d) authorizes the intermixing of different inner packaging of tested and approved combination packagings with no further testing provided certain conditions are met and that several packages meeting the condition set forth in § 173.171(d) may be overpacked together if the 100 pound net mass limitation is not exceeded] and prohibits the ability to mix brands and sizes of powder without further EX approval or performance oriented packaging (POP) testing.

In this response to SAAMI's appeal, we are revising the listing in the HMT for UN0509, ''Smokeless powder, Division 1.4C'' in Column (9B) to read ''75 kg'' and revising the vessel stowage codes in Columns (10A) and (10B) to show ''2'' and ''25,'' respectively. These were unintentional typographical errors. This was not the intention of the HM–219 rulemaking and we are correcting those errors in this final rule.

We are revising special provision 16 to read as it did in the HM–219 NPRM, and the introductory language in § 173.171 to read: ''Smokeless powder for small arms which has been classed in Division 1.3 or Division 1.4 may be reclassed in Division 4.1, for domestic transportation by motor vehicle, rail car, vessel, or cargo-only aircraft, subject to the following conditions.'' We are also reestablishing §§ 173.171(c) and 173.171(d) to read as they did before the amendments of HM–219 were adopted. These amendments were made in the interest of clarification.

As the revisions to the wording to § 173.171(a) in HM–219 were designed to provide relief for shippers of smokeless powder, in that they would not be required to retest powders already classed as Division 1.3C or 1.4C, we are retaining the wording as shown in the HM–219 final rule for § 173.171(a).

2. Clarification of Alcohol and Gasoline Mixtures (P–1522)

In HM–219, PHMSA responded to Shell Chemicals' petition (P–1522) to remove from the HMT the listing for ''Gasohol, with not more than 10% ethanol.'' Shell Chemicals stated that the proper shipping names for ''Gasoline, includes gasoline mixed with ethyl alcohol (ethanol), with not more than 10% alcohol'' and ''Ethanol and gasoline mixture or Ethanol and motor spirit mixture or Ethanol and petrol mixture with more than 10% ethanol,'' provide the necessary entries for accurate and specific descriptions of these fuel blends. Consistent with the removal of Gasohol from the HMT, Shell Chemicals requested that we remove reference to Gasohol in §§ 172.336(c)(4) and 172.336(c)(5), which contain hazard communication requirements for compartmented cargo tanks, tank cars, or cargo tanks containing these fuels. These provisions were amended as the result of a final rule issued on January 28, 2008, under Docket No. PHMSA–05–21812 (HM–218D), and were intended to help emergency responders identify and respond to the hazards unique to fuel blends with high ethanol concentrations.

Shell Chemicals also requested that we remove special provision 172 from Column (7) in association with all packing groups for the Proper Shipping Name ''Alcohols, n.o.s.'' Special provision 172 states that ''this entry includes alcohol mixtures containing up to 5% petroleum products.''

In its petition, Shell Chemicals contended that:

> Canada does not permit the use of UN1987, Alcohols, n.o.s.' for alcohol mixtures containing up to 5% petroleum products. A shipment originating in the United States,

destined for a customer in Canada using the proper shipping name of ''UN1987, Alcohols, n.o.s.'' must change the placard and the proper shipping name and to use the entry 'UN3475, Ethanol and Gasoline mixture,' when the packaging is returned to the United States. The use of both PSN entries causes a lot of confusion.

For these reasons, Shell Chemicals stated that these blends should not be permitted to be transported under the ''UN 1987, Alcohols, n.o.s.''; rather, ''NA 1987, Denatured alcohol,'' and ''UN 3475, Ethanol and gasoline mixture or Ethanol and motor spirit mixture or Ethanol and petrol mixture,'' are more appropriate descriptions.

In the HM–219 NPRM, we proposed removal of the entry ''Gasohol'' from the HMT and we retained special provision 172 in association with ''Alcohols, n.o.s.'' We indicated that, while we agree that ''Denatured alcohol'' is a more accurate description, this proper shipping name applies to domestic shipments only and may not be available to imported shipments of alcohol mixtures containing up to 5% petroleum products.

DGAC, in its comments to the HM–219 NPRM, agreed with Shell Chemicals and stated that:

[I]n North America, international shipments of gasoline/ethanol mixtures are predominately between the US and Canada by either highway or rail. Canada does not permit the use of UN1987 in the manner permitted by Special Provision 172. Shipments where UN1987 is used for ethanol/gasoline mixtures face frustrations when moving into Canada, requiring placards to be changed to comply with Canadian regulations.

DGAC stated that the full range of gasoline and ethanol concentrations is covered by UN1203 and UN3475, making special provision 172 unnecessary. We agree that the full range of gasoline and ethanol concentrations can be covered by UN1203 and UN3475. However, when the regulations were changed to incorporate UN3475, and the number of shipments and types of gasoline/ethanol blends increased in 2008, stakeholders (including industry, emergency responders, and local, state and Federal government entities) made it apparent that there was a need for that special provision. Special provision 172 was established in response to concerns expressed by stakeholders for the safety of emergency responders. The Emergency Response Guidebook (ERG) directs emergency responders to Guide 128 for ID number 1993, and recommends ''regular foam'' to fight large fires. Guide 127 for ID number 1987 recommends ''alcohol-resistant foam.'' Special provision 172, as provided in the entries for ''Denatured Alcohol, NA 1987'' and ''Alcohols, n.o.s., UN 1987,'' allows solutions of alcohol and petroleum products to be described as either ''Denatured Alcohol'' or ''Alcohols, n.o.s.,'' provided the solution contains no more than 5% petroleum products, and alerts emergency responders as to the type of foam needed to extinguish a fire. For these reasons, in the HM–219 final rule we amended the HMT by removing the listing for ''Gasohol, gasoline mixed with ethyl alcohol, with not more than 10% alcohol,'' we retained Special provision 172, and we revised § 172.336 to remove all references to ''Gasohol'' and to add a table to more clearly indicate hazard communication requirements for compartmented cargo tanks, tank cars, or cargo tanks containing these fuels.

PHMSA Response:

On April 3, 2013, DGAC appealed the retention of special provision 172 and requested that we provide a one-year effective date for the removal of the listing in the HMT for ''Gasohol.'' DGAC reasoned that special provision 172 should be removed because Canada no longer recognizes it, and that special provision 330 in the UN Model Regulations, which closely resembled special provision 172, was removed in the 14th edition.

With respect to extending the effective date to one year from publication of final rule HM–219 for the removal of the listing for ''Gasohol'' in the HMT, this is already authorized in § 172.101(l). By operation of law, packages filled prior to the effective date of the amendment may be shipped; and stocks of preprinted shipping papers and package markings to be used, in the manner previously authorized, until depleted or for a one-year period, subsequent to the effective date of the amendment, whichever is less. As stakeholders already have one year to diminish their supplies, it is not necessary for us to extend the effective date for the removal of Gasohol in this final rule.

Regarding special provision 172, it is important to note that we did not propose its removal in the NPRM. While DGAC commented to our intent to retain special provision 172 citing reasons why it should be removed, we disagreed with DGAC in the HM–219 final rule. Although special provision 330 was removed from the UN Model Regulations, we believe that domestically it provides emergency responders with accurate and important response guidance. Furthermore, because we did not propose the removal of special provision 172 in the HM–219 NPRM, we cannot remove it in this final rule without providing public notice and the opportunity for all interested stakeholders to comment. For these reasons we are retaining special provision 172 in this final rule.

3. Certification Packaging Marking and Recordkeeping Requirements (P–1479)

PHMSA responded to a petition for rulemaking by gh Package & Product, Testing and Consulting, Inc. (PPTC), (P–1479), which requested that we consider amending the HMR to indicate that an entity performing continued packaging certification on a UN certification packaging is not allowed to use the original manufacturer's or third party laboratory's mark unless authorized by the manufacturer or third-party laboratory. PPTC also requested we amend the HMR to provide that packaging test reports be kept for a limited time instead of the current requirement of ''until the packaging is no longer manufactured.''

Marking

Regarding the manufacturer's or third party tester's mark, PPTC stated that its third-party laboratory performed design qualification testing of a manufacturer's packaging at least three times, and the packaging failed each time. Eleven years after PPTC had tested the packaging, it learned that the packaging that had failed in its laboratory was still being manufactured and that PPTC's third-party laboratory symbol was being used on the packaging as the packaging tester's mark without permission. PPTC is of the opinion that the language in § 178.3 is unclear because it enables anyone to use the manufacturer's mark, which could expose the original third-party test laboratory to potential liability for defective packaging and other packaging violations.

Section 178.3 provides the person who is certifying compliance of a packaging with the option of marking the packaging with a symbol, rather than the company name and address, provided that the symbol is registered with PHMSA's Associate Administrator for Hazardous Materials Safety. While it is implied that the symbol being used is that of the person who has registered the symbol, it is not explicit. PPTC has indicated that since the regulations do not specify who is authorized to use the mark, some third-party retesters that did not initially certify the packaging are continuing to use the original third-party laboratory's symbol to certify compliance. While the symbol is associated with the original manufacturer or third-party laboratory,

that entity has no control over the packaging being retested by someone else.

In the HM–219 NPRM, we proposed to revise § 178.3(a)(2) to clarify that the required marking must identify the person who is certifying that the packaging has passed either the periodic retest or the design qualification test. We further proposed that, unless authorized in writing by the holder of the symbol, symbols must represent either the packaging manufacturer or the approval agency responsible for providing the most recent certification for the packaging through design certification testing or periodic retesting, as applicable.

DGAC disagreed with the proposed changes stating that they would have the effect of replacing, in the UN performance packaging marking, the mark of the person who performed the design qualification tests with the mark of the person who performed the most recent periodic retest. DGAC stated that ''periodic retesting does not necessarily confirm compliance with all requirements applicable to a UN design type (e.g., requirements in §§ 178.504–523).'' We are aware of the differences between design qualification and periodic retesting, and understand that under the UN Model Regulations the manufacturer's marking is intended to signify the entity responsible for the design qualification test. Our intent is to ensure that under the HMR, the marking on the packaging is traceable to the entity responsible for certifying the packaging—whether that certification is signifying that the packaging passed the design qualification test or the periodic retest. Currently, the HMR differ from the UN Model Regulations with respect to the testing of packagings because the UN Model Regulations only require a design test and do not require periodic retesting of packagings. For this reason, the UN Model Regulations do not have to account for the potential of unauthorized use of a third-party laboratory's symbol, nor do they have to distinguish what the mark signifies. In Chapter 6.1, paragraph 6.1.3 of the UN Recommendations, with respect to marking, Note 1 states that: ''The marking indicates that the packaging which bears it corresponds to a successfully tested design type and that it complies with the requirements of this Chapter . . .''; whereas the HMR in § 178.503(a)(8) states: ''A packaging conforming to a UN standard must be marked as follows: [with] the name and address or symbol of the manufacturer or the approval agency certifying compliance with subpart L and subpart M of this part.'' Subpart M includes both design type and periodic retesting.

Further, DGAC states that:

> [A] consequence of the proposed changes is that the UN package marking for a given design type would have to be changed at least every year in the case of single or composite packagings and every two years in the case of combination packagings. It does not appear that PHMSA has considered the costs of changing these package markings at this frequency in its regulatory evaluation. At a minimum, such marking changes could result in considerable administrative costs. In addition, we question whether these changes would provide a meaningful enhancement to safety.

It is our intent that the certification mark indicated on a packaging is that of the person manufacturing the packaging, or testing the packaging, on behalf of the manufacturer. We anticipated the concerns raised by DGAC and as such, provided an allowance for the use of the mark of the person who performed the design qualification tests if authorized in writing by the holder of the mark. An additional option is that the mark is representative of the person who physically manufactured the packaging, in which case, it would not change based on who conducts the design testing or retesting.

For these reasons, we adopted the changes proposed regarding the packaging certifier's mark in the HM–219 final rule and revised § 178.3 to indicate that the required marking must identify the person who is certifying that the packaging meets the applicable UN Standard. Further, for continued certification of the packaging through periodic retesting, the marking must identify the person who certifies that the packaging continues to meet the applicable UN Standard.

PHMSA Response:

In an appeal dated March 27, 2013, DGAC contends that:

> [T]he new requirement introduces certain inconsistencies within the HMR, the costs of the change could be significant, and that PHMSA has provided insufficient time to provide for orderly implementation. In addition, considering the lack of discussion, it would appear that PHMSA did not consider the change under requirements of the Paperwork Reduction Act. Contrary to PHMSA's assertion that the change is a clarification, it is a fundamental change to the regulations.

DGAC also asserts that the effective date of the HM–219 final rule does not provide enough time for users of another entity's mark to request permission to use the mark. We believe that the allowances provided by the final rule, such as requesting permission from the person who conducted the design testing, using the mark of the person who physically manufactured the packaging, or using its own mark, are sufficient and timely options.

DGAC further asserts:

> Since PHMSA did not discuss the change under the preamble heading ''F. Paperwork Reduction Act'', it is assumed that PHMSA's analysis did not account for the increased information collection required due to this change. Under 5 CFR § 1320.3(c)(1) an *information collection* includes a ''posting, notification, labeling, or similar disclosure requirements''. In our opinion, a UN package marking would fall within this category of information collection. In addition, under 5 CFR § 1320.2(b)(1), a *burden* is defined to include: ''(v) Adjusting the existing ways to comply with any previously applicable instructions and requirements;'' On this basis, we are under the impression that changing the required marking on UN packagings (i.e., replacing the design qualification laboratory symbol with the manufacturer or retest laboratory symbol) constitutes a ''burden'' as defined by the PRA regulations.

Regarding the Paperwork Reduction Act (PRA), we have not revised the marking requirements. We have simply clarified in the regulations that a person may not use the mark of the person who performed the design qualification testing when marking for a periodic retest without the written permission of the person who performed the design qualification test. We see no difference in the paperwork burden between the current regulations and the changes made under the HM–219 final rule. To underscore this point, we note that the requirements prior to the publication of the HM–219 final rule allowed the person that performed the periodic retest to mark the packaging with its mark. Specifically, for non-bulk packaging, § 178.503(e)(8) requires that the packaging be marked with the name and address or symbol of the manufacturer or the approval agency certifying compliance with Subparts L and M of Part 178. Design qualification testing and periodic retesting requirements are provided in Subpart M of Part 178. The intent of the periodic retest is to ensure that each packaging produced by the manufacturer is capable of passing the design qualification tests.

Therefore, we have not amended the marking requirements. Rather, we have merely clarified that a person who retests and marks a packaging may use its own mark, but may not use the mark of another testing entity without the written permission of that entity. For these reasons, we are retaining the revisions made in the HM–219 final rule to § 178.3(a)(2) and are not extending

the effective date with respect to these requirements.

4. Test Reports

The record retention requirements for packaging testing in sections 178.601(l), 178.801(l), and 178.955(i), indicate that the test report must be maintained at each location where the packaging is manufactured and each location where the design qualification tests are conducted for as long as the packaging is produced and for at least two years thereafter. As described in PPTC's petition, the original packaging manufacturer or third-party packaging testing laboratory is often not aware that a packaging is still being made, but is required to retain records until the packaging is no longer made. PPTC contends that a third-party laboratory should not be responsible for providing information on packaging that it has no control or approval over.

In the HM–219 NPRM, we proposed to revise § 178.601(l), which specifies recordkeeping requirements for testing non-bulk packaging; § 178.801(l), which specifies recordkeeping requirements for testing Intermediate Bulk Containers (IBCs); and § 178.955(i), which specifies recordkeeping requirements for testing large packagings, to indicate that records must be maintained by:

- The manufacturer for as long as the packaging is made and two years thereafter;
- The person performing the design testing until the next periodic retest is successfully performed, a new test report is produced, and five years thereafter; and
- The person performing the periodic retest until the next periodic retest is successfully performed and a new test report produced.

In its comments to the HM–219 NPRM, DGAC opposed this change, stating that:

> PHMSA may alter the required frequency based on an approval and, in the case of IBCs and Large packagings, PHMSA may substitute a quality control program for required periodic retesting (see § 178.801(e)(2)). As such, the periodic retest date is not a date certain, raising the question of how the person who conducted the design qualification tests can know the actual time period for retaining records. If PHMSA maintains the proposed record retention requirements in some form, we recommend the retention period be tied to the date of the design qualification testing rather than the date of periodic retesting. When the required packaging retest frequency is based on an approval and, in the case of IBCs and Large packagings, a quality control program is substituted for required periodic retesting, records would have to be maintained predicated on the specifications of each approval.

We agreed with DGAC that retest dates may vary depending on a variety of factors (e.g. the manufacturer may choose a higher frequency than required, PHMSA may alter the required frequency based on an approval and, in the case of IBCs and large packagings, PHMSA may substitute a quality control program for required periodic retesting). In the HM–219 final rule, we added the word ''required'' in conjunction with the design qualification and periodic retesting recordkeeping requirements to clarify that records of the retest must be kept only for the specified duration after the HMR-required test is performed successfully. Specifically, we revised the language proposed in the HM–219 NPRM in § 178.601(l), which specified recordkeeping requirements for testing non-bulk packaging; § 178.801(l), which specified recordkeeping requirements for testing IBCs; and § 178.955(i), which specified recordkeeping requirements for testing large packagings, to indicate that records are maintained until the next *required* periodic retest is successfully performed and a new test report produced. In all other respects, we amended the HMR as proposed in the HM–219 NPRM. In doing so, we limited the document retention period for persons conducting initial design testing to five years beyond the next successful required periodic retest. In addition, we provided a table to clearly identify the retention requirements for test reports. The table appeared as follows in the HM–219 final rule:

Responsible party	Duration
Person manufacturing the packaging	As long as manufactured and two years thereafter.
Person performing design testing	Until next required periodic retest is successfully performed, a new test report produced, and five years thereafter.
Person performing periodic retesting	Until next required periodic retest is successfully performed and a new test report produced.

PHMSA Response:

In an appeal dated March 28, 2013, RIPA asked that we reconsider the record retention requirement changes to § 178.601(l), for testing non-bulk packaging; § 178.801(l), for testing IBCs; and § 178.955(i) for large packagings. RIPA states:

> As other commentators have pointed out, design type tests and periodic retests are not necessarily equivalent, e.g. paper or fiberboard. We wonder why PHMSA would allow the original design type test to disappear at any time during the production life of a packaging.

Further, RIPA suggests that instead of the recordkeeping requirements published in HM–219 final rule, the following recordkeeping requirements should apply:

Responsible party	Duration
Person manufacturing the packaging	Design test and most recent periodic retest maintained as long as manufactured and two years thereafter.
Person performing design testing	Design test maintained for six years after the test is successfully performed.
Person performing periodic retesting	Until next required periodic retest is successfully performed and a new test report produced.

The amendment to the recordkeeping requirements for packaging testing was intended to limit the record retention time period for the person performing the design type test. We did this because the third-party packaging testing laboratory is often not aware that a packaging is still being made. We provided that the design test results are kept until the next required periodic retest is successfully performed, a new test report produced, and five years

thereafter. For single or composite packagings, the record retention duration would have been six years, as the suggested language shows in the RIPA appeal. However, for combination packagings and packagings intended for infectious substances, the record retention duration would have been for seven years. With respect to the retester's recordkeeping requirements, we stated that the retester must keep records until the next periodic retest is successfully performed, which would be one year for single or composite packagings and two years for combination packagings or packagings intended for infectious substances.

We agree with RIPA regarding its suggested revisions to the recordkeeping requirement for persons performing the design testing, but we also will clarify in this final rule that the recordkeeping requirements for combination packagings and packagings intended for infectious substances is seven years. Instead of requiring periodic retesters to keep records until the next required periodic retest is successfully performed and a new test report produced, we are clarifying that the duration the records must be kept are one year after the test has been successfully performed for single or composite packagings and two years after the test has been successfully performed for combination packagings or packagings intended for infectious substances. In its appeal to the HM–219 final rule, RIPA questions why PHMSA would allow the original design type test to disappear. We have always intended for the manufacturer to retain all test records, including the design qualification and all periodic retest. In this final rule we are revising the tables in §§ 178.601(l), 178.801(l) and 178.955(i) as follows:

Responsible party	Duration
Person manufacturing the packaging	As long as manufactured and two years thereafter.
Person performing design testing	Design test maintained for a single or composite packaging for six years after the test is successfully performed and for a combination packaging or packaging intended for infectious substances for seven years after the test is successfully performed.
Person performing periodic retesting	Performance test maintained for a single or composite packaging for one year after the test is successfully performed and for a combination packaging or packaging intended for infectious substances for two years after the test is successfully performed.

III. Section-by-Section Review of Changes

In this final rule, we are making editorial corrections and clarifying amendments to sections that were amended by the final rules HM–215K and HM–215L both published January 7, 2013; HM–218G published March 11, 2013; and HM–219 published March 7, 2013, for consistency with grammatical conventions and for consistency with similar provisions within the HMR. We are also making conforming amendments to sections in the HMR affected by these four final rules. The clarifying or conforming amendments in this final rule do not impose new requirements but rather are intended to provide a better understanding of the requirements adopted in the final rules. The corrections and amendments are as follows:

Part 171

Section 171.7

This section lists material incorporated by reference into the HMR. In the January 7, 2013 final rule PHMSA–2012–0027 (HM–215L), we incorporated UN Recommendations on the Transport of Dangerous Goods, Manual of Tests and Criteria, fifth revised edition, Amendment 1 (2011) (Manual of Tests and Criteria), which was intended to supplement UN Recommendations on the Transport of Dangerous Goods, Manual of Tests and Criteria, fifth revised edition (2009), however we replaced the reference to the fifth revised edition (2009) with the supplement (Amendment 1) only. In this final rule, we are revising § 171.7(dd) by adding UN Recommendations on the Transport of Dangerous Goods, Manual of Tests and Criteria, fifth revised edition (2009).

Section 171.8

This section defines terms generally used throughout the HMR that have broad or multi-modal applicability. In the January 7, 2013 final rule PHMSA–2012–0027 (HM–215L), we introduced the definition *Aircraft Battery* in the section-by-section review, however, it was not added to the regulatory text. In this final rule, we are adding the defined term *Aircraft Battery* to mean ''a battery designed in accordance with a recognized aircraft battery design standard (e.g. FAA technical standard order) that is capable of meeting all aircraft airworthiness requirements and operating regulations.''

Section 171.23

This section prescribes requirements for specific materials and packagings transported under the ICAO TI, IMDG, Transport Canada TDG Regulations or the IAEA Regulations. In paragraph (b)(8), the Organic Peroxide Table incorrectly referenced as § 173.225(b) and should be § 173.225(c). In this rule, we are correcting this error.

Part 172

Section 172.101

This section prescribes the purpose and instructions for use of the § 172.102 Hazardous Materials Table (HMT). In the January 7, 2013 final rule PHMSA–2012–0027 (HM–215L), we added ''Chemical under pressure, n.o.s.'' entries to the HMT to address shipments of liquids or solids (e.g., adhesives, coatings, and cleaners) combined with a gas or gas mixtures utilized to expel the contents from pressure vessels. We authorized UN Portable Tanks by referencing 173.313 in Column (8C) bulk packaging authorizations, but inadvertently failed to authorize the use of DOT specification tanks. We are adding ''315'' to Column (8C) for the ''Chemical under pressure, n.o.s.'' entries authorizing use of DOT specification tanks.

In the January 7, 2013 final rule PHMSA–2012–0027 (HM–215L), we attempted to remove an erroneous entry for ''Aerosols, poison, *(each not exceeding 1 L capacity),* UN1950'' from the table. This entry was not removed during publishing, and resulted in two entries for ''Aerosols, poison'' currently existing in the HMT. In this final rule we are removing the duplicative entry for ''Aerosols, poison, *(each not exceeding 1 L capacity).*

In the January 19, 2011 final rule (PHMSA–2009–0126 [HM–215K]), PHMSA revised several organometallic substance entries in the HMT by adding

the new portable tank special provision TP36. A number of entries were erroneously duplicated in the publication process and, in this final rule, we are removing the duplicate entries. Additionally, in the January 19, 2011 final rule, the sour crude oil entry under UN3494 was added to the HMT and erroneously placed between the Packing Group II and III petroleum oil entries under NA1270. This final rule corrects that error.

PHMSA identified a typographical error as a result of revisions made in the HM–219 final rule. In the HMT, the listing for ''self-reactive solid type E'' showed an incorrect ID number in Column (4), and incorrect quantity limitations in Columns (9A) and (9B). Upon publication of the HM–219 NPRM, PHMSA did not receive any comment on the unintended typographical errors in the HMT and, therefore, PHMSA adopted the changes as proposed in the final rule. PHMSA acknowledges that these typographical errors in HM–219 were not intended. In addition, an error occurred during publishing that caused in the listing for ''Self-reactive solid type E'' to be removed and the listing for ''Self-reactive solid type F'' to be duplicated. In this final rule, we are removing the duplicate listing for ''Self-reactive solid type F'' and correcting the entry in the HMT for ''Self-reactive solid type E,'' to indicate ''UN3228'' in Column (4) and ''10 kg'' in Column (9A) and ''25 kg'' in Column (9B) by re-adding the listing that was removed in error.

We are making a number of editorial corrections to several entries in the HMT. The editorial corrections are as follows:

Amendments to Column (1) Symbols

For the entry ''Sulfuric acid, fuming *with 30 percent or more free sulfur trioxide,* UN1831,'' the ''+'' Symbol in Column (1) is removed as it was inadvertently added when the entry was amended in HM–218G.

Amendments to Column (4) Identification Numbers

- For the entry ''Cartridges power device *(used to project fastening devices),* ORM–D,'' the Identification Number in Column (4) is amended to indicate a blank entry consistent with the remaining ORM–D entries in the HMT.
- For the entry for ''Self-reactive solid type E,'' the Identification Number in column (4) is revised to read ''UN3228.''

Amendments to Column (5) Packing Group

- For the entry ''Powder, smokeless, UN0509'', the Packing Group in Column (5) is corrected to read ''II.''
- For the entry ''Propellant, solid, UN0501'', the Packing Group in Column (5) is corrected to read ''II.''

Amendments to Column (6) Label Codes

For the entry ''Cartridges for weapons, blank *or* Cartridges, small arms, blank *or* Cartridges for tools, blank, UN0014'', the Label Code in Column (6) is corrected to read ''None''.

- For the entry ''Cartridges for weapons, inert projectile *or* Cartridges, small arms, UN0012,'' the Label Code in Column (6) is corrected to read ''None.''

Amendments to Column (7) Special Provisions

- For the entry ''Consumer commodity, ORM–D,'' special provision 222 is added in Column (7) for consistency with the other ORM–D entries in the HMT.
- For the entries ''Substances, explosive, n.o.s.,'' assigned to UN numbers UN0357, UN0358, and UN0359, special provision 101 is added in Column (7) as intended and mentioned in the preamble to the HM–215L final rule.
- For the entry ''Other regulated substances, liquid, n.o.s.,'' special provision A189 is added in Column (7) as indicated by the preamble discussion in the HM–215L final rule to help direct shippers to the most appropriate entry for shipments of formaldehyde solutions containing varying amounts of formaldehyde.

Amendments to Column (8A) Packaging Exceptions

- For the entry ''Cartridges, power device, UN0323,'' the Packaging Exception in Column (8A) is corrected to read ''63.''

Amendments to Column (8C) Bulk Packaging Authorizations

- For the ''Chemical under pressure, n.o.s.'' entries, the packaging authorization ''315'' is added to Column (8C) to authorize use of DOT specification tanks in addition to UN portable tanks.

Amendments to Column (9) Quantity Limitations

- For the entry ''Consumer commodity, ORM–D,'' the Quantity Limitation in Column (9B) is revised to read ''Forbidden,'' consistent with the other ORM–D entries in the HMT.
- For the entry for ''Powder, smokeless, 1.4C,'' the Quantity Limitation in Column (9B) is revised to read ''75kg.''
- For the entry for ''Self-reactive solid type E,'' the Quantity Limitation in Column (9) is revised to read ''10 kg'' in column (9A) and ''25 kg'' in Column (9B).

Amendments to Column (10) Vessel Stowage Requirements

- For the entry ''Model rocket motor, NA0276,'' the Vessel Stowage in Column (10) is corrected to read ''02'' in Column (10A) and ''25'' in Column (10B).
- For the entry ''Model rocket motor, UN0323,'' the Vessel Stowage in Column (10) is corrected to read ''01'' in Column (10A) and ''25'' in Column (10B).
- Corrections are made to the following entries in Column (10A) of the HMT for Vessel Stowage Location codes by adding a ''0'' preceding a single digit entry; for example, ''1'' is corrected to read ''01'':
  - Revised to read ''01'': NA0337, UN0173, UN0174, UN0193, UN0345, UN0373, UN0376, UN0481, UN0506, UN0507;
  - Revised to read ''02'': UN0191, UN0197, UN0306, UN0320, UN0344, UN0347, UN0370, UN0407, UN0425, UN0435, UN0438, UN0453, UN0479, UN0480, UN0485, UN0493, UN0501, UN0502, UN0505;
  - Revised to read ''03'': UN0192, UN0194, UN0195, UN0196, UN0212, UN0238, UN0240, UN0313, UN0319, UN0424, UN0434, UN0476, UN0478, UN0482, UN0487, UN0492;
  - Revised to read ''04'': UN0153, UN0154, UN0155, UN0159, UN0160, UN0161, UN0168, UN0169, UN0181, UN0182, UN0183, UN0186, UN0207, UN0208, UN0209, UN0213, UN0214, UN0215, UN0216, UN0217, UN0218, UN0219, UN0220, UN0221, UN0234, UN0235, UN0236, UN0280, UN0281, UN0286, UN0287, UN0329, UN0346, UN0374, UN0375, UN0386, UN0387, UN0388, UN0389, UN0390, UN0391, UN0394, UN0433, UN0436, UN0437, UN0451, UN0474, UN0475, UN0477, UN0495, UN0497, UN0498, UN0499, UN0504;
  - Revised to read ''05'': UN0167, UN0180, UN0190, UN0204, UN0250, UN0295, UN0296, UN0322, UN0324, UN0330, UN0357, UN0358, UN0359, UN0369, UN0371, UN0377, UN0378, UN0395, UN0396, UN0397, UN0398, UN0426, UN0427, UN0449, UN0450, UN0473.

Section 172.102

Section 172.102 sets forth the text of the special provisions referenced in the HMT. PHMSA revised special provision

16 in the HM–219 final rule to read: ''This description applies to smokeless powder and other propellant powders that are used as powder for small arms and have been classed as Division 1.3C and 1.4C and reclassed to Division 4.1 in accordance with § 173.56 and § 173.58 of this subchapter.'' By making this revision, we intended to clearly indicate that only smokeless powder or propellant in powder form may qualify for reclassification into Division 4.1, and ensure that powders that have hazard properties different from ''propellants'' could not be reclassified into Division 4.1. In response to SAAMI's appeal to HM–219, in this final rule we are revising special provision 16 to read: ''This description applies to smokeless powder and other solid propellants that are used as powder for small arms and have been classed as Division 1.3C, 1.4C and Division 4.1 in accordance with § 173.56 of this subchapter.''

Section 172.202

This section establishes requirements for shipping descriptions on shipping papers. As part of the shipping description requirements, in many situations a net quantity or gross mass of the hazardous materials transported must be shown. In the January 7, 2013 final rule (HM–215L) we revised § 172.202 by adding a new paragraph (a)(6)(vii) to harmonize with the ICAO TI as to whether, for limited quantities, the net quantity or gross mass is required to be shown on the shipping document, including when different hazardous materials are packed together in the same outer packaging. In the final rule, we associated this requirement with Column (9) of the HMT. After receiving several comments, and upon further review, in this final rule we are revising § 172.202(a)(6)(vii) to associate this requirement for limited quantities with column 4 of the § 173.27 Table 3, as this is a better alignment with the ICAO TI. Specifically, we are revising paragraph (a)(6)(vii) to state that for hazardous materials in limited quantities, the total net quantity per package must be shown unless a gross mass is indicated in column 4 of § 173.27 Table 3, in which case the total gross mass per package must be shown. Where different hazardous materials in limited quantities are packed together in the same outer packaging, when a gross mass is indicated column 4 of the § 173.27 Table 3, the net quantity of each hazardous material must be shown in addition to the gross mass of the completed package.

Section 172.301

Section 172.301 prescribes the general marking requirements for non-bulk packagings. In the HM–215L final rule, § 172.301(a)(1)(i) was amended with a minor grammatical error stating ''paragraph this'' instead of ''this paragraph.'' In this final rule, we are correcting this grammatical error.

Section 172.315

Section 172.315 prescribes the requirements applicable to marking packages of limited quantity material. In the section-by-section review in the January 7, 2013 final rule (HM–215K) we stated our intent to authorize continued use of the alternative limited quantity marking (i.e., square-on-point and Identification Number) prescribed in § 172.315(d), in effect on October 1, 2010, until December 31, 2015. However, an incorrect date was published in the regulatory text. In this document, we are authorizing use of the alternative limited quantity marking prescribed in § 172.315(d) until December 31, 2015.

Section 172.316

Section 172.316 prescribes the marking requirements for packages of ORM–D material. In this final rule, we are revising paragraph (a) for clarity as the reclassification to ORM–D–AIR is no longer authorized as of January 1, 2013.

Section 172.336

Section 172.336 sets forth exceptions to the identification number marking requirements on various tanks. In the HM–219 final rule, we removed references to Gasohol in § 172.336 and established a table to better indicate where identification marks should be displayed on each tank type. In so doing, we identified that the requirements for nurse tanks were unclear. In this final rule, we are clarifying the identification number marking requirements for nurse tanks to state that they are not required on one end of nurse tanks if that end contains valves, fittings, regulators or gauges when those appurtenances prevent the markings and placard from being properly placed and visible as set forth in § 173.315(m).

Part 173

Section 173.6

Section 173.6 prescribes exceptions from certain requirements of the HMR for the transportation of hazardous materials defined as materials of trade (MOTS) when transported by motor vehicle. In the January 7, 2013 final rule (HM–215K), we adopted revisions to the paragraph (d) exceptions that reflect the phase-out of the ORM–D system on December 31, 2020, and applied the exception provided ORM–D material to hazardous materials authorized for transportation as a limited quantity under Subparts C through E and Subpart G of Part 173 of the HMR. We are removing, in response to public comment received subsequent to the issuance of the January 7, 2013 final rule (HM–215K), the reference to limited quantities prepared in accordance with § 173.27 in § 173.6(a)(6). MOTS is a highway-transport-only exception.

Section 173.22

Section 173.22 prescribes various shipper responsibilities. In this final rule, the word ''filed'' in the last sentence of paragraph (a)(4)(ii) is corrected to read ''filled.'' Additionally, paragraph (a)(4)(iii) is revised for clarity by specifying the duration of record retention for compliance with Selective Testing Variation 1 as prescribed in § 178.601(g)(1).

Section 173.24

Section 173.24 prescribes the general requirements for packagings and packages. In this final rule, we are revising paragraph (i) for editorial purposes. Currently, except as provided in Subpart C of part 171 of this Subchapter, packages offered or intended for transportation by aircraft must conform to the general requirements for transportation by aircraft in § 173.27. This would include packages of consumer commodities prepared in accordance with § 173.167. This was never intended to be the case as the requirements of § 173.167 are meant to be stand-alone as they are in Packing Instruction Y963 of the ICAO TI.

Section 173.25

Section 173.25 prescribes requirements for the transportation of authorized packages in overpacks used for protection or convenience of handling or to consolidate packages. In this final rule, paragraphs (a)(6) and (a)(7) are revised by removing the italicized font in each heading for consistency within the section and adding an em dash after each heading.

Section 173.27

Section 173.27 prescribes the general requirements for transportation by aircraft. In this final rule, we are revising the Class 8 list of articles and substances not authorized limited quantity status in paragraph (f)(2)(i)(F) by adding Identification Number

UN3506 (Mercury in manufactured articles). In the HM–215L rulemaking, we inadvertently overlooked this new international entry and failed to add it to the list of ineligible substances and articles not authorized as limited quantities consistent with the 2013–2014 ICAO TI. Additionally, in Table 3 of paragraph (f)(3), we are correcting the Class 9 liquid and solid entries to include the identification numbers ''UN3334'' and ''UN3335'' in the second and third columns of the table.

Section 173.62

Section 173.62 prescribes the specific packaging requirements for explosives. In final rule published on January 7, 2013 (HM–215L), we revised various packaging provisions in the ''Table of Packing Methods'' in this section to align with changes adopted in the 17th Revised Edition of the UN Model Regulations. The revisions to the authorized packaging methods provided greater flexibility when packaging explosives while retaining an appropriate level of safety. These changes included, but were not limited to, permitting various explosives to be transported in closed head drums in addition to the already permitted removable head drums and adding the option to utilize wooden inner and intermediate packagings in various packaging provisions. We revised § 173.62(c), Table of Packing Methods, packing instruction 130, to include additional options for outer packagings. Specifically, the use of boxes and drums constructed of metal other than steel or aluminum (4N) and the use of closed head drums in addition to the already permitted removable head drums.

In a subsequent final rule published on March 11, 2013, under Docket No. PHMSA 2011–0138 (HM–218G), entitled ''Hazardous Materials; Miscellaneous Amendments (RRR),'' we again revised § 173.62(c), Table of Packing Methods, packing instruction 130 to add the following language that was inadvertently removed from the first column of the packing instruction:

2. Subject to approval by the Associate Administrator, large explosive articles, as part of their operational safety and suitability tests, subjected to testing that meets the intentions of Test Series 4 of the UN Manual of Tests and Criteria with successful test results, may be offered for transportation in accordance with the requirements of this subchapter.

When reinstating the removed language in the HM–218G final rule, we inadvertently removed the additional options for outer packagings authorized in the packing instruction 130 in the HM–215L final rule. We did not intend to remove these outer packagings from packing instruction 130 and unnecessarily limit the transport of large explosive articles. Therefore, we are correcting § 173.62(c), Table of Packing Methods, packing instruction 130, to reinstate the additional options for outer packagings inadvertently removed from the third column of packing instruction 130.

In addition to the correction to packing instruction 130, the HM–215L final rule also revised packing instruction 112(b). The outer packaging authorization was inadvertently changed from ''bags'' to ''boxes.'' As such, we are revising packing instruction 112(b) by correcting the outer packaging authorization to ''bags.''

Section 173.63

Section 173.63 details packaging exceptions for specific types of low hazard explosive materials including certain detonators, small arms ammunition, cartridges power device and detonating cord. We received an appeal to the HM–215L rulemaking from SAAMI requesting multiple changes to § 173.63.

SAAMI requested clarifying edits to § 173.63(b) to ensure provisions in place for ORM–D shipments of ''Cartridges, power device (*used to project fastening devices*)'' prior to HM–215L are maintained. We are amending the introductory text to §§ 173.63(b)(1)(i), (b)(1)(ii), and (b)(1)(iii) to ensure proper use of the modifying phrase ''used to project fastening devices'' and modifying §§ 173.63(b)(1)(iii)(G) and 173.63(b)(2)(v) to ensure ORM–D shipments of these ''Cartridges, power device (used to project fastening devices)'' when appropriately packaged may utilize the ORM–D exception provided in § 173.63.

Section 173.144

Section 173.144 defines ''Other Regulated Materials, ORM–D.'' We are amending the definition to include ''Cartridges, power device *(used to project fastening devices),''* ''Cartridges for tools, blank,'' and ''Cases, cartridge, empty with primer'' as authorized in § 173.63(b)(iii).

Section 173.150

Section 173.150 provides exceptions from the HMR for certain Class 3 flammable liquid material. Specifically, § 173.150(d) provides exceptions for alcoholic beverages for all modes of transport. Generally, the HMR is harmonized with the ICAO TI with regard to the exceptions provided for alcoholic beverages shipped by passenger- carrying and cargo-only aircraft. However, prior to the publication of the HM–218G final rule, for cargo-only aircraft, the HMR did not align with the ICAO TI. This lack of harmonization led to frustration of shipments of these types of materials in international air transport.

To address this issue, we proposed in the HM–218G NPRM, to revise the exceptions in § 173.150(d) to harmonize the alcoholic beverages exception via aircraft with the requirements in the ICAO TI, and to restructure the exceptions in § 173.150(d) to provide clarity on the requirements for the transport of alcoholic beverages by each mode of transport including passenger-carrying and cargo-only aircraft.

We did not receive any negative comments on this proposed change and one comment suggesting revised regulatory text to promote clarity. In a subsequent HM–218G final rule, we adopted the revised § 173.150(d)(2) to harmonize the HMR with the ICAO TI for the air transportation of alcoholic beverages.

Upon further review of the regulatory language adopted in the HM–218G final rule, we identified an unintended error in need of correction. Specifically, §§ 173.150(d)(2)(ii) and 173.150(d)(2)(iii) use the language ''but less than 70% alcohol by volume'' when describing the upper limit of the exception. This implies that beverages containing exactly 70% alcohol by volume would not be permitted to use this exception. Section 175.10(a)(4)(ii) and in ICAO TI, Special Provision A9 use the language ''not more than 70 per cent alcohol by volume'' permitting alcohols containing exactly 70% alcohol by volume to use the exception. While these two phrases seem similar, ''but less than 70% alcohol by volume'' adopted in the HM–218G final rule is unintentionally more stringent, and is inconsistent with the ICAO TI or inconsistent and § 175.10(a)(4)(ii). Therefore, we are revising §§ 173.150(d)(2)(ii) and 173.150(d)(2)(iii) by replacing the phrase ''but less than 70% alcohol by volume'' with the phrase ''not more than 70 per cent alcohol by volume.'' This will ensure consistency within the HMR and harmonize fully the HMR and ICAO TI with regard to the alcoholic beverages exception.

Section 173.156

Section 173.156 prescribes exceptions for limited quantity and ORM material. In this final rule, we are correcting an error made to paragraph (b)(1) in the January 7, 2013 HM–215K final rule. In that paragraph, we except certain shipments from the limited quantity and

ORM–D marking requirements of the HMR if they are so marked. This is incorrect. This rule corrects that inconsistency by allowing them to remain excepted from the marking provisions as they were prior to the January 7, 2013 final rule. Additionally, we are removing the redundant paragraph (b)(2)(vi).

Section 173.165

This section prescribes the requirements for polyester resin kits. In both January 7, 2013 final rules, HM–215K and HM–215L, revisions were made to § 173.165 inadvertently resulting in duplicate paragraphs concerning consumer commodities and omitting the HM–215L paragraph (c), limited quantities. We are revising § 173.165 by removing the duplicate paragraph concerning commodities and replacing paragraph (c) with the limited quantity language from the HM–215L final rule.

Section 173.167

Section 173.167 prescribes the requirements for consumer commodities intended for air transportation. In this final rule, we are revising paragraph (a) for editorial purposes. Currently, except as provided in Subpart C of Part 171 of this Subchapter, packages offered or intended for transportation by aircraft must conform to the general requirements for transportation by aircraft in § 173.27. This would include packages of consumer commodities prepared in accordance with § 173.167. This was never intended to be the case. The requirements of § 173.167 are meant to be stand-alone, as they are in Packing Instruction Y963 of the ICAO TI.

Section 173.171

Section 173.171 provides exceptions for Smokeless powder for small arms that has been classed as an explosive and reclassed as a Division 4.1 for domestic transportation by motor vehicle, rail car, vessel, or cargo-only aircraft, subject to certain conditions. In the HM–219 final rule, we revised the introductory paragraph of § 173.171 to read: ''Powders that have been classed in Division 1.3 or Division 1.4C may be reclassed in Division 4.1, for domestic transportation by motor vehicle, rail car, vessel, or cargo-only aircraft, subject to the following conditions''; we revised § 173.171(a) to read: ''Powders that have been approved as Division 1.3C or Division 1.4C may be reclassed to Division 4.1 in accordance with §§ 173.56 and 173.58 of this part''; we revised § 173.171 (c) to read: ''Only combination packagings with inner packagings not exceeding 3.6 kg (8 pounds) net mass and outer packaging of UN 4G fiberboard boxes meeting the Packing Group I standards are authorized. Inner packagings must be arranged and protected so as to prevent simultaneous ignition of the contents. The complete package must be of the same type that has been examined as required in § 173.56 of this part''; and we revised § 173.171(d) to read: ''The net weight of smokeless powder in any one box (one package) must not exceed 7.3 kg (16 pounds).'' In response to SAAMI's appeal to HM–219, in this final rule we are revising the introductory language in § 173.171 to read: ''Smokeless powder for small arms which has been classed in Division 1.3 or Division 1.4 may be reclassed in Division 4.1, for domestic transportation by motor vehicle, rail car, vessel, or cargo-only aircraft, subject to the following conditions.''

We are also reestablishing §§ 173.171(c) and 173.171(d) to read as they did before the amendments of HM–219 were adopted. As the revisions to the wording to § 173.171(a) in HM–219 were designed to provide relief for shippers of smokeless powder, in that they would not be required to retest powders already classed as Division 1.3C or 1.4C, we are retaining the wording as shown in the HM–219 final rule for § 173.171(a).

Section 173.176

This section was added in the January 7, 2013 HM–215L final rule and prescribes the requirements for capacitors. In the ICAO TI, capacitors, UN3499, are assigned to Packing Instruction 971 which provides, ''The capacitor or, when fitted in a module, the module must be fitted with a metal strap connecting the terminals.'' This requirement in Packing Instruction 971 differs from the requirement adopted in Special Provision A186 of the ICAO TI assigned to UN3499 which provides, ''When a capacitor's energy storage capacity is less than or equal to 10 Wh or when the energy storage capacity of each capacitor in a module is less than or equal to 10 Wh, the capacitor or module shall be protected against short circuit or be fitted with a metal strap connecting the terminals.'' In the January 7, 2013 HM–215L final rule, in § 173.176, for transportation by air, we inadvertently considered only the short circuit protection requirement contained in Packing Instruction 971 and did not account for the Special Provision A186 short circuit requirement for capacitors or capacitors in a module with an energy storage capacity less than or equal to 10 Wh. In their appeals, DGAC and Kilofarad International brought this inconsistency to our attention. We acknowledge this oversight and in this final rule we are revising paragraphs (a)(2)(i) and (a)(2)(ii) of § 173.176 by removing the references to ''transport by air'' to maintain consistency with Special Provision A186 of the ICAO TI.

Section 173.185

This section prescribes packaging requirements and certain conditional exceptions for the transport of lithium batteries. As DGAC correctly pointed out in their appeal, we did not include a grandfather provision for cells and batteries of a type that meets the 5th revised edition consistent with previous practice. While this does not change our intent to continue to permit the continued manufacture and transportation of lithium cells and batteries of a type meeting the requirements a previously authorized edition of the UN Manual of Tests and Criteria, we agree this may result in confusion and unnecessary retesting of previously validated designs. We are revising § 173.185 by clarifying that, irrespective of the January 1, 2006 date in § 173.185(a)(1), newly manufactured cells and batteries of a type successfully tested to the UN Manual of Tests and Criteria 3rd edition amendment 1 or a later edition may be transported without the need for the cell or battery type to be retested and that cells and batteries already distributed and tested to a previous edition of the Manual may continue to be transported.

Section 173.225

Section 173.225 prescribes the packaging requirements and other provisions for organic peroxides. Paragraph (c) of this section contains and describes the organic peroxide table and how specific organic peroxides are to be transported. In addition, paragraph (e) contains a separate table that prescribes the packaging requirements for organic peroxides packaged in IBCs.

In the HM–215L final rule, we made several changes to the § 173.225(c) Organic Peroxide Table. The instruction to the **Federal Register** for the revision of Diisopropyl peroxydicarbonate, UN 3115, was not clear and the incorrect table entry was modified in error. In this document we are re-adding Diisopropyl peroxydicarbonate, UN3112, to the table and removing the entry for Diisopropyl peroxydicarbonate, UN3115, ≤28 Concentration (mass %), ≥72 Diluent (mass %) A. For clarity, we are removing all entries for Diisopropyl peroxydicarbonate and re-adding in the correct sequence.

In the HM–215L final rule, we made several changes to the § 173.225(e) Organic Peroxide IBC Table. The instruction to the **Federal Register** was not clear for the addition of UN3119 ''Diisobutyryl peroxide, not more than 28% as a stable dispersion in water'' and UN3119, ''Diisobutyryl peroxide, not more than 42% as a stable dispersion in water'' and the entries were incorrectly added under the UN3109 table entries. The IBC Type ''31A'' was inadvertently removed from the entry for ''Di-(3, 5, 5-trimethylhexanoyl) peroxide, not more than 52% in diluent type A''. We are republishing the complete Organic Peroxide IBC Table to correct the errors provided above and properly alphabetize the entries.

Section 173.230

Section 173.230 prescribes the transport requirements for fuel cell cartridges containing hazardous material. In this final rule, we are revising § 173.230(f)(3) to correct a minor grammatical error by removing the duplicative instance of the word ''to'', published in the HM–215L final rule.

Section 173.301b

Section 173.301b provides additional general requirements for shipment of UN pressure receptacles. We are revising § 173.301b(d)(1) to correct a minor grammatical error in the HM–215L final rule by replacing a period with a semicolon.

Part 175

Section 175.10

Section 175.10 specifies the conditions for which passengers, crew members, or an operator may carry hazardous materials aboard an aircraft. We are correcting several editorial errors published in the HM–215L final rule. Paragraph (a)(15)(v)(C) is amended to correctly reference Special Provision 130. In paragraphs (a)(19)(vii) and (a)(19)(viii) the International Electrotechnical Commission (IEC) reference standard is corrected. Paragraph (a)(21) is revised to correct the numbering sequence. Paragraph (a)(24) is amended from 2.8 g to correctly state ''equivalent to a 28 g carbon dioxide cartridge,'' consistent with the ICAO TI.

Section 175.25

Section 175.25 prescribes the notification that operators must provide to passengers regarding restrictions on the types of hazardous material they may or may not carry aboard an aircraft on their person or in checked or carry-on baggage. The January 19, 2011 HM–215K final rule revised provisions in § 175.25 applicable to notification and acknowledgement of the types of hazardous materials that a passenger may or may not carry aboard an aircraft by updating the ticketing and flight check-in provisions of the HMR based on current technologies used to perform such functions.

Subsequent to issuance of the final rule, PHMSA and FAA received several administrative appeals, and, at an August 16, 2012 public meeting, received written and oral comments requesting additional time for affected entities to implement the new provisions in a more effective and cooperative manner. PHMSA and FAA agreed that a delay in the compliance date of the revised § 175.25 was warranted, particularly if a delay supported the implementation of more effective methods for increasing passenger awareness of, and compliance with, the HMR. Therefore, PHMSA and FAA provided notification of extending the compliance date for all new provisions adopted in the January 19, 2011 final rule until January 1, 2015.

In this final rule, PHMSA is revising paragraphs (b) and (c) by removing the first sentence in each paragraph for editorial purposes and clarity as the two sentences are redundant. Because the requirements of paragraphs (a), (b), and (c) are not mutually exclusive, the two sentences are extraneous and not necessary. Lastly, existing paragraph (c)(2) is redesignated as new paragraph (d) for clarity.

We want to emphasize these clarifications are for editorial purposes only and do not impose any new requirements. Further, such clarifications do not remove or relax any current or future § 175.25 regulatory requirements.

Section 175.75

Section 175.75 prescribes quantity limitation and cargo location requirements for hazardous materials carried aboard passenger-carrying and cargo-only aircraft. In this final rule, we are amending the list of materials that are excepted from the inaccessible loading restrictions in paragraphs (c), (d), and note 1 of the table in paragraph (f) to include articles with Identification Numbers UN0012, UN0014, and UN0055, that are properly prepared under the provisions prescribed in § 173.63(b). These amendments are in response to an administrative appeal submitted by SAAMI. In its appeal, SAAMI requested clarification to ensure that shipments of these three commodities, properly prepared in accordance with the requirements of § 173.63(b), are eligible for relief from the loading limits in § 175.75. It was never our intent to subject these articles that have historically received relief from the accessibility requirements of § 175.75 to these requirements. An article with Identification Numbers UN0012, UN0014, or UN0055, properly packaged and marked in accordance with § 173.63(b), is excepted from the requirements of § 175.75(c) and (e)(1) if it is declared on air transport shipping papers as a limited quantity or not.

In the January 19, 2011 HM–215K final rule, the HMR was amended to align with international standards by revising the notes to the paragraph (f) Quantity and Loading Table that excepted certain cargo-aircraft only packages from the accessible loading restrictions. For example, Note (a) to Note 1 was revised to except cargo-only flammable liquids substances of Class 3, Packing Group III from the accessible loading restrictions unless it was labeled with a corrosive (Class 8) subsidiary risk. However, Note (b) to Note 1 was not revised by excepting a cargo-only toxic liquid substance of Division 6.1 from the accessible loading restrictions unless it was labeled with a subsidiary risk other than flammable liquid (Class 3). As a result, revised Note (a) conflicts with existing Note (b). Therefore, in this final rule, we are revising Note (b) to align with the international standards by clarifying the accessible loading restrictions prescribed in § 175.75(f) do not apply to a cargo-only toxic liquid substance of Division 6.1 unless it is labeled with a subsidiary risk other than flammable liquid (Class 3).

Part 176

Section 176.905

Section 176.905 prescribes specific requirements for motor vehicles or mechanical equipment powered by internal combustion engines that are offered for transportation and transported by vessel. In this final rule, we are correcting a numbering error that occurred in the January 7, 2013 final rule in paragraph (i).

Part 178

Sections 178.601, 178.801 and 178.955

Sections 178.601, 178.801, and 178.955, set forth recordkeeping requirements for packaging manufacturers, design type testers, and periodic retesters. In the HM–219 final rule, we revised the language in § 178.601(l), which specified recordkeeping requirements for testing non-bulk packaging; § 178.801(l), which

specified recordkeeping requirements for testing IBCs; and § 178.955(i), which specified recordkeeping requirements for testing large packagings, to indicate that records must be maintained by the manufacturer for as long as the packaging is made and two years thereafter; the person performing the design testing until the next required periodic retest is successfully performed, a new test report is produced, and five years thereafter; and the person performing the periodic retest until the next required periodic retest is successfully performed and a new test report produced. We received an administrative appeal from RIPA that indicated that the revisions made in the HM–219 final rule to §§ 178.601, 178.801, and 178.955, may be unclear. In response to that appeal, we are revising the recordkeeping for design testers to require that the design test is maintained for a single or composite packaging for six years after the test is successfully performed and for a combination packaging or packaging intended for infectious substances for seven years after the test is successfully performed.

IV. Regulatory Analyses and Notices

A. Statutory/Legal Authority for This Rulemaking

This final rule is published under the following statutory authorities:

1. 49 U.S.C. 5103(b) authorizes the Secretary of Transportation to prescribe regulations for the safe transportation, including security, of hazardous material in intrastate, interstate, and foreign commerce. This final rule responds to appeals and corrects various errors made during the development of the two January 7, 2013, the March 7, 2013, and the March 11, 2013 final rules and printing process. To this end, as discussed in detail earlier in this preamble, the two January 7, 2013 final rules amended the HMR to more fully align it with the biennial updates of the UN Recommendations, the IMDG Code and the ICAO TI to facilitate the transport of hazardous materials in international commerce.

2. 49 U.S.C. 5120(b) authorizes the Secretary of Transportation to ensure that, to the extent practicable, regulations governing the transportation of hazardous materials in commerce are consistent with standards adopted by international authorities. This final rule responds to appeals and corrects errors made during the development of the two January 7, 2013, the March 7, 2013, and the March 11, 2013 final rules and printing process and makes amendments to conform to amendments made in these four final rules.

B. Executive Orders 12866 and 13563 and DOT Regulatory Policies and Procedures

This final rule is not considered a significant regulatory action under section 3(f) of Executive Order 12866 (''Regulatory Planning and Review'') and, therefore, was not reviewed by the Office of Management and Budget. This final rule is not considered a significant rule under the Regulatory Policies and Procedures of the Department of Transportation (44 FR 11034). Additionally, E.O. 13563 (''Improving Regulation and Regulatory Review'') supplements and reaffirms E.O. 12866, stressing that, to the extent permitted by law, an agency rulemaking action must be based on benefits that justify its costs, impose the least burden, consider cumulative burdens, maximize benefits, use performance objectives, and assess available alternatives. The revisions adopted in this final rule do not alter the cost-benefit analysis and conclusions contained in the Regulatory Evaluations in the two January 7, 2013 final rules. The Regulatory Evaluations are available for review in the public docket.

C. Executive Order 13132

This final rule has been analyzed in accordance with the principles and criteria in Executive Order 13132 (''Federalism''). This final rule does not adopt any regulation that: (1) Has substantial direct effects on the states, the relationship between the national government and the states, or the distribution of power and responsibilities among the various levels of government; or (2) imposes substantial direct compliance costs on state and local governments. PHMSA is not aware of any state, local or Indian tribe requirements that would be preempted by correcting editorial errors and making minor regulatory changes. This final rule does not have sufficient federalism impacts to warrant the preparation of a federalism assessment.

D. Executive Order 13175

This final rule was analyzed in accordance with the principles and criteria contained in Executive Order 13175 (''Consultation and Coordination with Indian Tribal Governments''). Because this final rule does not have tribal implications and, does not impose substantial direct compliance costs the funding and consultation requirements of Executive Order 13175 do not apply.

E. Regulatory Flexibility Act, Executive Order 13272, and DOT Procedures and Policies

The Regulatory Flexibility Act (5 U.S.C. 601 *et seq.*) requires an agency to review regulations to assess their impact on small entities unless the agency determines that a rule is not expected to have a significant impact on a substantial number of small entities. The corrections and revisions contained in this final rule will have little or no effect on the regulated industry. Based on the assessment in the regulatory evaluation, to the two January 7, 2013 final rules, I hereby certify that, while this rule applies to a substantial number of small entities, there will not be a significant economic impact on those small entities. A detailed Regulatory Flexibility analysis is available for review in the docket.

This final rule has been developed in accordance with Executive Order 13272 (''Proper Consideration of Small Entities in Agency Rulemaking'') and DOT's procedures and policies to promote compliance with the Regulatory Flexibility Act to ensure that potential impacts of final rules on small entities are properly considered.

F. Paperwork Reduction Act

This final rule imposes no new information collection requirements.

G. Regulation Identifier Number (RIN)

A regulation identifier number (RIN) is assigned to each regulatory action listed in the Unified Agenda of Federal Regulations. The Regulatory Information Service Center generally publishes the Unified Agenda in April and October of each year. The RIN contained in the heading of this document can be used to cross-reference this action with the Unified Agenda.

H. Unfunded Mandates Reform Act

This final rule does not impose unfunded mandates under the Unfunded Mandates Reform Act of 1995. It does not result in costs of $141.3 million or more, adjusted for inflation, to either State, local, or tribal governments, in the aggregate, or to the private sector in any one year, and is the least burdensome alternative that achieves the objective of the rule.

I. Environmental Assessment

The National Environmental Policy Act, 42 U.S.C. 4321–4375 requires that Federal agencies consider the consequences of major Federal actions and prepare a detailed statement on actions significantly affecting the quality of the human environment. In final rules PHMSA–2009–0126 (HM–

215K), PHMSA–2012–0027 (HM–215L), PHMSA–2011–0138 (HM–218G), and PHMSA–2011–0142 (HM–219), we developed environmental assessments to determine the effects of these revisions on the environment and whether they resulted in significant environmental impacts. These assessments resulted in a Finding of No Significant Impact. The purpose of this rulemaking is to correct editorial errors, makes minor regulatory changes and, in response to requests for clarification, improves the clarity of certain provisions in the HMR. The intended effect of this rule is to enhance the accuracy and reduce misunderstandings of the regulations. The amendments contained in this rule are non-substantive changes and do not impose new requirements. Therefore, PHMSA has determined that the implementation of this final rule will not have any significant impact on the quality of the human environment. For interested parties, environmental assessments are included in the PHMSA–2009–0126 (HM–215K), PHMSA–2012–0027 (HM–215L), PHMSA–2011–0138 (HM–218G), and PHMSA–2011–0142 (HM–219) final rules which are available in the public docket.

J. Privacy Act

Anyone is able to search the electronic form of all comments received into any of our dockets by the name of the individual submitting the comments (or signing the comment, if submitted on behalf of an association, business, labor union, etc.). You may review DOT's complete Privacy Act Statement in the **Federal Register** published on April 11, 2000 (Volume 65, Number 70; Pages 19477–78) which may be viewed at *http://www.dot.gov/privacy*.

K. Executive Order 13609 and International Trade Analysis

Under E.O. 13609, agencies must consider whether the impacts associated with significant variations between domestic and international regulatory approaches are unnecessary or may impair the ability of American business to export and compete internationally. In meeting shared challenges involving health, safety, labor, security, environmental, and other issues, international regulatory cooperation can identify approaches that are at least as protective as those that are or would be adopted in the absence of such cooperation. International regulatory cooperation can also reduce, eliminate, or prevent unnecessary differences in regulatory requirements.

Similarly, the Trade Agreements Act of 1979 (Pub. L. 96–39), as amended by the Uruguay Round Agreements Act (Pub. L. 103–465), prohibits Federal agencies from establishing any standards or engaging in related activities that create unnecessary obstacles to the foreign commerce of the United States. For purposes of these requirements, Federal agencies may participate in the establishment of international standards, so long as the standards have a legitimate domestic objective, such as providing for safety, and do not operate to exclude imports that meet this objective. The statute also requires consideration of international standards and, where appropriate, that they be the basis for U.S. standards.

PHMSA participates in the establishment of international standards to protect the safety of the American public, and we have assessed the effects of this final rule to ensure that it does not cause unnecessary obstacles to foreign trade. In fact, the rule is designed to facilitate international trade. Accordingly, this rulemaking is consistent with E.O. 13609 and PHMSA's obligations under the Trade Agreement Act, as amended.

List of Subjects

49 CFR Part 171

Exports, Hazardous materials transportation, Hazardous waste, Imports, Incorporation by reference, Reporting and recordkeeping requirements.

49 CFR Part 172

Education, Hazardous materials transportation, Hazardous waste, Incorporation by reference, Labeling, Markings, Packaging and containers, Reporting and recordkeeping requirements.

49 CFR Part 173

Hazardous materials transportation, Incorporation by reference, Packaging and containers, Radioactive materials, Reporting and recordkeeping requirements, Uranium.

49 CFR Part 175

Air carriers, Hazardous materials transportation, Incorporation by reference, Radioactive materials, Reporting and recordkeeping requirements.

49 CFR Part 176

Hazardous materials transportation, Incorporation by reference, Maritime carriers, Radioactive materials, Reporting and recordkeeping requirements.

49 CFR Part 178

Hazardous materials transportation, Incorporation by reference, Motor vehicle safety, Packaging and containers, Reporting and recordkeeping requirements.

In consideration of the foregoing, PHMSA is amending 49 CFR Chapter I as follows:

PART 171—GENERAL INFORMATION, REGULATIONS, AND DEFINITIONS

■ 1. The authority citation for part 171 continues to read as follows:

Authority: 49 U.S.C. 5101–5128, 44701; 49 CFR 1.81 and 1.97; Pub. L. 101–410 section 4 (28 U.S.C. 2461 note); Pub. L. 104–134 section 31001.

■ 2. In § 171.7, paragraph (dd)(2) is revised to read as follows:

§ 171.7 Reference material.

* * * * *

(dd) * * *

(2) UN Recommendations on the Transport of Dangerous Goods, Manual of Tests and Criteria, (Manual of Tests and Criteria), into §§ 172.102; 173.21; 173.56; 173.57; 173.58; 173.60; 173.115; 173.124; 173.125; 173.127; 173.128; 173.137; 173.185; 173.220; part 173, appendix H; 178.274:

(i) Fifth revised edition (2009).

(ii) Fifth revised edition, amendment 1 (2011).

* * * * *

■ 3. In § 171.8, the definition of ''Aircraft battery'' is added in alphabetical order to read as follows:

§ 171.8 Definitions and abbreviations.

* * * * *

Aircraft battery means a battery designed in accordance with a recognized aircraft battery design standard (e.g. FAA technical standard order) that is capable of meeting all aircraft airworthiness requirements and operating regulations.

* * * * *

■ 4. In § 171.23, paragraph (b)(8) is revised to read as follows:

§ 171.23 Requirements for specific materials and packagings transported under the ICAO Technical Instructions, IMDG Code, Transport Canada TDG Regulations, or the IAEA Regulations.

* * * * *

(b) * * *

(8) *Organic peroxides.* Organic peroxides not identified by technical name in the Organic Peroxide Table in § 173.225(c) of this subchapter must be approved by the Associate Administrator in accordance with § 173.128(d) of this subchapter.

* * * * *

PART 172—HAZARDOUS MATERIALS TABLE, SPECIAL PROVISIONS, HAZARDOUS MATERIALS COMMUNICATIONS, EMERGENCY RESPONSE INFORMATION, AND TRAINING REQUIREMENTS

■ 5. The authority citation for part 172 continues to read as follows:

Authority: 49 U.S.C. 5101–5128; 44701; 49 CFR 1.81 and 1.97.

■ 6. In § 172.101, the Hazardous Materials Table is amended by removing the entries under ''[REMOVE]'', and revising entries under ''[REVISE]'' and adding entries under ''[ADD]'' in alphabetical order.

The revisions and additions read as follows:

§ 172.101 Purpose and use of hazardous materials table.

* * * * *

Symbols	Hazardous materials descriptions and proper shipping names	Hazard class or division	Identification numbers	PG	Label codes	Special provisions (§ 172.102)	(8) Packaging (§ 173.***) Exceptions	Non-bulk	Bulk	(9) Quantity limitations (see §§ 173.27 and 175.75) Passenger aircraft/rail	Cargo aircraft only	(10) Vessel stowage Location	Other
(1)	(2)	(3)	(4)	(5)	(6)	(7)	(8A)	(8B)	(8C)	(9A)	(9B)	(10A)	(10B)
	[REMOVE]												
			*		*	* *		*		*	*		
	Aerosols,*poison, (each not exceeding 1 L capacity)*.	2.2	UN1950		2.2, 6.1		306	None	None	Forbidden	Forbidden	A	48, 87, 126
			*		*	* *		*		*	*		
G	Organometallic substance, liquid, pyrophoric.	4.2	UN3392	I	4.2	B11, T21, TP2, TP7, TP36.	None	181	244	Forbidden	Forbidden	D	78
G	Organometallic substance, liquid, pyrophoric, water-reactive.	4.2	UN3394	I	4.2, 4.3	B11, T21, TP2, TP7, TP36.	None	181	244	Forbidden	Forbidden	D	78
G	Organometallic substance, liquid, water-reactive.	4.3	UN3398	I	4.3	T13, TP2, TP7, TP36.	None	201	244	Forbidden	1 L	E	40, 52
				II	4.3	IB1, T7, TP2, TP7, TP36.	None	202	243	1 L	5 L	E	40, 52
				III	4.3	IB2, T7, TP2, TP7, TP36.	None	203	242	5 L	60 L	E	40, 52
G	Organometallic substance, liquid, water-reactive, flammable.	4.3	UN3399	I	4.3, 3	T13, TP2, TP7, TP36.	None	201	244	Forbidden	1 L	D	40, 52
				II	4.3, 3	IB1, IP2, T7, TP2, TP7, TP36.	None	202	243	1 L	5 L	D	40, 52
				III	4.3, 3	IB2, IP4, T7, TP2, TP7, TP36.	None	203	242	5 L	60 L	E	40, 52
G	Organometallic substance, solid, pyrophoric.	4.2	UN3391	I	4.2	T21, TP7, TP33, TP36.	None	187	244	Forbidden	Forbidden	D	
G	Organometallic substance, solid, pyrophoric, water-reactive.	4.2	UN3393	I	4.2, 4.3	B11, T21, TP7, TP33.	None	187	244	Forbidden	Forbidden	D	52
G	Organometallic substance, solid, self-heating.	4.2	UN3400	II	4.2	IB6, T3, TP33, TP36.	None	212	242	15 kg	50 kg	C	
				III	4.2	IB8, T1, TP33, TP36.	None	213	242	25 kg	100 kg	C	
G	Organometallic substance, solid, water-reactive.	4.3	UN3395	I	4.3	N40, T9, TP7, TP33, TP36.	None	211	242	Forbidden	15 kg	E	40, 52
				II	4.3	IB4, T3, TP33, TP36.	151	212	242	15 kg	50 kg	E	40, 52
				III	4.3	IB6, T1, TP33, TP36.	151	213	241	25 kg	100 kg	E	40, 52
G	Organometallic substance, solid, water-reactive, flammable.	4.3	UN3396	I	4.3, 4.1	N40, T9, TP7, TP33, TP36.	None	211	242	Forbidden	15 kg	E	40, 52
				II	4.3, 4.1	IB4, T3, TP33, TP36.	151	212	242	15 kg	50 kg	E	40, 52
				III	4.3, 4.1	IB6, T1, TP33, TP36.	151	213	241	25 kg	100 kg	E	40, 52
G	Organometallic substance, solid, water-reactive, self-heating.	4.3	UN3397	I	4.3, 4.2	N40, T9, TP7, TP33, TP36.	None	211	242	Forbidden	15 kg	E	40, 52
				II	4.3, 4.2	IB4, T3, TP33, TP36.	None	212	242	15 kg	50 kg	E	40, 52
				III	4.3, 4.2	IB6, T1, TP33, TP36.	None	213	241	25 kg	100 kg	E	40, 52
G	Organometallic substance, solid, pyrophoric.	4.2	UN3391	I	4.2	T21, TP7, TP33	None	187	244	Forbidden	Forbidden	D	

G	Organometallic substance, solid, pyrophoric, water-reactive.	4.2	UN3393	I	4.2, 4.3	B11, T21, TP7, TP33.	None	187	244	Forbidden	Forbidden	D	52
G	Organometallic substance, solid, self-heating.	4.2	UN3400	II	4.2	IB6, T3, TP33	None	212	242	15 kg	50 kg	C	
				III	4.2	IB8, T1, TP33	None	203	242	25 kg	100 kg	C	
G	Organometallic substance, solid, water-reactive.	4.3	UN3395	I	4.3	N40, T9, TP7, TP33	None	211	242	Forbidden	Forbidden	E	40, 52
				II	4.3	IB4, T3, TP33	151	212	242	15 kg	50 kg	E	40, 52
				III	4.3	IB6, T1, TP33	151	213	241	25 kg	100 kg	E	40, 52
G	Organometallic substance, solid, water-reactive, flammable.	4.3	UN3396	I	4.3, 4.1	N40, T9, TP7, TP33	None	211	242	Forbidden	Forbidden	E	40, 52
				II	4.3, 4.1	IB4, T3, TP33	151	212	242	15 kg	50 kg	E	40, 52
				III	4.3, 4.1	IB6, T1, TP33	151	213	241	25 kg	100 kg	E	40, 52
G	Organometallic substance, solid, water-reactive, self-heating.	4.3	UN3397	I	4.3, 4.2	N40, T9, TP7, TP33	None	211	242	Forbidden	Forbidden	E	40, 52
				II	4.3, 4.2	IB4, T3, TP33	None	212	242	15 kg	50 kg	E	40, 52
				III	4.3, 4.2	IB6, T1, TP33	None	213	241	25 kg	100 kg	E	40, 52
		*		*		*	*	*		*	*		
D	Petroleum oil	3	NA1270	I	3	144, T11, TP1	None	201	243	1 L	30 L	E	
				II	3	144, IB2, T7, TP1, TP8, TP28.	150	202	242	5 L	60 L	B	
I	Petroleum sour crude oil, flammable, toxic.	3	UN3494	I	3, 6.1	343, T14, TP2, TP13.	None	201	243	Forbidden	30 L	D	40
				III	3	144, B1, IB3, T4, TP1, TP29.	150	203	242	60 L	220 L	A	
		*		*		*	*	*		*	*		
G	Self-reactive solid type F	4.1	UN3230	II	4.1		151	224	None	10 kg	25 kg	D	52, 53
		*		*		*	*	*		*	*		
	[ADD]												
		*		*		*	*	*		*	*		
G	Organometallic substance, liquid, pyrophoric.	4.2	UN3392	I	4.2	B11, T21, TP2, TP7, TP36.	None	181	244	Forbidden	Forbidden	D	78
G	Organometallic substance, liquid, pyrophoric, water-reactive.	4.2	UN3394	I	4.2, 4.3	B11, T21, TP2, TP7, TP36.	None	181	244	Forbidden	Forbidden	D	78
G	Organometallic substance, liquid, water-reactive.	4.3	UN3398	I	4.3	T13, TP2, TP7, TP36.	None	201	244	Forbidden	1 L	E	40, 52
				II	4.3	IB1, T7, TP2, TP7, TP36.	None	202	243	1 L	5 L	E	40, 52
				III	4.3	IB2, T7, TP2, TP7, TP36.	None	203	242	5 L	60 L	E	40, 52
G	Organometallic substance, liquid, water-reactive, flammable.	4.3	UN3399	I	4.3, 3	T13, TP2, TP7, TP36.	None	201	244	Forbidden	1 L	D	40, 52
				II	4.3, 3	IB1, IP2, T7, TP2, TP7, TP36.	None	202	243	1 L	5 L	D	40, 52
				III	4.3, 3	IB2, IP4, T7, TP2, TP7, TP36.	None	203	242	5 L	60 L	E	40, 52
G	Organometallic substance, solid, pyrophoric.	4.2	UN3391	I	4.2	T21, TP7, TP33, TP36.	None	187	244	Forbidden	Forbidden	D	
G	Organometallic substance, solid, pyrophoric, water-reactive.	4.2	UN3393	I	4.2, 4.3	B11, T21, TP7, TP33, TP36.	None	187	244	Forbidden	Forbidden	D	52
G	Organometallic substance, solid, self-heating.	4.2	UN3400	II	4.2	IB6, T3, TP33, TP36.	None	212	242	15 kg	50 kg	C	
				III	4.2	IB8, T1, TP33, TP36.	None	213	242	25 kg	100 kg	C	

Symbols	Hazardous materials descriptions and proper shipping names	Hazard class or division	Identification numbers	PG	Label codes	Special provisions (§ 172.102)	(8) Packaging (§ 173.***) Exceptions	Non-bulk	Bulk	(9) Quantity limitations (see §§ 173.27 and 175.75) Passenger aircraft/rail	Cargo aircraft only	(10) Vessel stowage Location	Other
(1)	(2)	(3)	(4)	(5)	(6)	(7)	(8A)	(8B)	(8C)	(9A)	(9B)	(10A)	(10B)
G	Organometallic substance, solid, water-reactive.	4.3	UN3395	I	4.3	N40, T9, TP7, TP33, TP36.	None	211	242	Forbidden	15 kg	E	40, 52
				II	4.3	IB4, T3, TP33, TP36.	151	212	242	15 kg	50 kg	E	40, 52
				III	4.3	IB6, T1, TP33, TP36.	151	213	241	25 kg	100 kg	E	40, 52
G	Organometallic substance, solid, water-reactive, flammable.	4.3	UN3396	I	4.3, 4.1	N40, T9, TP7, TP33, TP36.	None	211	242	Forbidden	15 kg	E	40, 52
				II	4.3, 4.1	IB4, T3, TP33, TP36.	151	212	242	15 kg	50 kg	E	40, 52
				III	4.3, 4.1	IB6, T1, TP33, TP36.	151	213	241	25 kg	100 kg	E	40, 52
G	Organometallic substance, solid, water-reactive, self-heating.	4.3	UN3397	I	4.3, 4.2	N40, T9, TP7, TP33, TP36.	None	211	242	Forbidden	15 kg	E	40, 52
				II	4.3, 4.2	IB4, T3, TP33, TP36.	None	212	242	15 kg	50 kg	E	40, 52
				III	4.3, 4.2	IB6, T1, TP33, TP36.	None	213	241	25 kg	100 kg	E	40, 52
			*		*	* *		*		* *			
D	Petroleum oil	3	NA1270	I	3	144, T11, TP1	None	201	243	1 L	30 L	E	
				II	3	144, IB2, T7, TP1, TP8, TP28.	150	202	242	5 L	60 L	B	
				III	3	144, B1, IB3, T4, TP1, TP29.	150	203	242	60 L	220 L	A	
I	Petroleum sour crude oil, flammable, toxic.	3	UN3494	I	3, 6.1	343, T14, TP2, TP13.	None	201	243	Forbidden	30 L	D	40
			*		*	* *		*		* *			
G	Self-reactive solid type E	4.1	UN3228	II	4.1		151	224	None	10 kg	25 kg	D	52, 53
			*		*	* *		*		* *			
	[REVISE]												
			*		*	* *		*		* *			
	Cartridges for weapons, blank *or* Cartridges, small arms, blank *or* Cartridges for tools, blank.	1.4S	UN0014	II	None		63	62	None	25 kg	100 kg	01	25
			*		*	* *		*		* *			
	Cartridges for weapons, inert projectile *or* Cartridges, small arms.	1.4S	UN0012	II	None		63	62	None	25 kg	100 kg	01	25
			*		*	* *		*		* *			
	Cartridges, power device	1.4S	UN0323	II	1.4S	110, 347	63	62	62	25 kg	100 kg	01	25
			*		*	* *		*		* *			
D	Cartridges power device *(used to project fastening devices).*	ORM–D			None	222	63	None	None	30 kg gross	Forbidden	A	
			*		*	* *		*		* *			
D	Consumer commodity	ORM–D			None	222	156, 306	156, 306	None	30 kg gross	Forbidden	A	
			*		*	* *		*		* *			
G	Chemical under pressure, corrosive, n.o.s.	2.2	UN3503		2.2, 8	362, T50, TP40	None	335	313,315	Forbidden	100 kg	D	40
G	Chemical under pressure, flammable, corrosive, n.o.s.	2.1	UN3505		2.1, 8	362, T50, TP40	None	335	313,315	Forbidden	75 kg	D	40

G	Chemical under pressure, flammable, n.o.s.	2.1	UN3501		2.1	362, T50, TP40	None	335	313,315	Forbidden	75 kg	D	40
G	Chemical under pressure, flammable, toxic, n.o.s.	2.1	UN3504		2.1, 6.1	362, T50, TP40	None	335	313,315	Forbidden	75 kg	D	40
G	Chemical under pressure, n.o.s.	2.2	UN3500		2.2	362, T50, TP40	None	335	313,315	75 kg	150 kg	B	
G	Chemical under pressure, toxic, n.o.s.	2.2	UN3502		2.2, 6.1	362, T50, TP40	None	335	313,315	Forbidden	100 kg	D	40
			*		*	*		*		*			
D	Model rocket motor	1.4C	NA0276	II	1.4C	51	None	62	None	Forbidden	75 kg	02	25
D	Model rocket motor	1.4S	NA0323	II	1.4S	51	None	62	None	25 kg	100 kg	01	25
			*		*	*		*		*			
D G	Other regulated substances, liquid, n.o.s.	9	NA3082	III	9	A189, IB3, T2, TP1	155	203	241	No limit	No limit	A	
	Powder, smokeless	1.4C	UN0509	II	1.4C	16	171	62	None	Forbidden	75 kg	02	25
			*		*	*		*		*			
	Primers, cap type	1.4S	UN0044	II	None		None	62	None	25 kg	100 kg	01	25
	Primers, cap type	1.1B	UN0377	II	1.1B		None	62	None	Forbidden	Forbidden	05	25
	Primers, cap type	1.4B	UN0378	II	1.4B		None	62	None	Forbidden	75 kg	05	25
			*		*	*		*		*			
	Primers, tubular	1.3G	UN0319	II	1.3G		None	62	None	Forbidden	Forbidden	03	25
	Primers, tubular	1.4G	UN0320	II	1.4G		None	62	None	Forbidden	75 kg	02	25
	Primers, tubular	1.4S	UN0376	II	None		None	62	None	25 kg	100 kg	01	25
			*		*	*		*		*			
	Projectiles, *inert with tracer.*	1.4S	UN0345	II	1.4S			62	62	25 kg	100 kg	01	25
	Projectiles, *inert, with tracer.*	1.3G	UN0424	II	1.3G			62	62	Forbidden	Forbidden	03	25
	Projectiles, *inert, with tracer.*	1.4G	UN0425	II	1.4G			62	62	Forbidden	75 kg	02	25
	Projectiles, *with burster or expelling charge.*	1.2D	UN0346	II	1.2D			62	62	Forbidden	Forbidden	04	25
	Projectiles, *with burster or expelling charge.*	1.4D	UN0347	II	1.4D			62	62	Forbidden	75 kg	02	25
	Projectiles, *with burster or expelling charge.*	1.2F	UN0426	II	1.2F			62	None	Forbidden	Forbidden	05	25
	Projectiles, *with burster or expelling charge.*	1.4F	UN0427	II	1.4F			62	None	Forbidden	Forbidden	05	25
	Projectiles, *with burster or expelling charge.*	1.2G	UN0434	II	1.2G			62	62	Forbidden	Forbidden	03	25
	Projectiles, *with burster or expelling charge.*	1.4G	UN0435	II	1.4G			62	62	Forbidden	75 kg	02	25
	Projectiles, *with bursting charge.*	1.1F	UN0167	II	1.1F			62	None	Forbidden	Forbidden	05	25
	Projectiles, *with bursting charge.*	1.1D	UN0168	II	1.1D			62	62	Forbidden	Forbidden	04	25
	Projectiles, *with bursting charge.*	1.2D	UN0169	II	1.2D			62	62	Forbidden	Forbidden	04	25
	Projectiles, *with bursting charge.*	1.2F	UN0324	II	1.2F			62	None	Forbidden	Forbidden	05	25
	Projectiles, *with bursting charge.*	1.4D	UN0344	II	1.4D			62	62	Forbidden	75 kg	02	25
			*		*	*		*		*			
	Propellant, liquid	1.3C	UN0495	II	1.3C	37	None	62	None	Forbidden	Forbidden	04	25
	Propellant, liquid	1.1C	UN0497	II	1.1C	37	None	62	None	Forbidden	Forbidden	04	25
	Propellant, solid	1.1C	UN0498	II	1.1C		None	62	None	Forbidden	Forbidden	04	25, 26E
	Propellant, solid	1.3C	UN0499	II	1.3C		None	62	None	Forbidden	Forbidden	04	25, 26E
	Propellant, solid	1.4C	UN0501	II	1.4C		None	62	None	Forbidden	Forbidden	02	25, 24E
			*		*	*		*		*			
	RDX and HMX mixtures, wetted *with not less than 15 percent water by mass or* RDX and HMX mixtures, desensitized *with not less than 10 percent phlegmatizer by mass.*	1.1D	UN0391	II	1.1D		None	62	None	Forbidden	Forbidden	04	25

Symbols	Hazardous materials descriptions and proper shipping names	Hazard class or division	Identification numbers	PG	Label codes	Special provisions (§ 172.102)	(8) Packaging (§ 173.***) Exceptions	Non-bulk	Bulk	(9) Quantity limitations (see §§ 173.27 and 175.75) Passenger aircraft/rail	Cargo aircraft only	(10) Vessel stowage Location	Other
(1)	(2)	(3)	(4)	(5)	(6)	(7)	(8A)	(8B)	(8C)	(9A)	(9B)	(10A)	(10B)
			*		*	* *		*		* *			
	Release devices, explosive.	1.4S	UN0173	II	1.4S		None	62	62	25 kg	100 kg	01	25
			*		*	* *		*		* *			
	Rivets, explosive	1.4S	UN0174	II	1.4S		None	62	62	25 kg	100 kg	01	25
			*		*	* *		*		* *			
	Rocket motors	1.3C	UN0186	II	1.3C	109	None	62	62	Forbidden	220 kg	04	25
	Rocket motors	1.1C	UN0280	II	1.1C	109	None	62	62	Forbidden	Forbidden	04	25
	Rocket motors	1.2C	UN0281	II	1.2C	109	None	62	62	Forbidden	Forbidden	04	25
	Rocket motors, liquid fueled.	1.2J	UN0395	II	1.2J	109	None	62	None	Forbidden	Forbidden	05	25, 23E
	Rocket motors, liquid fueled.	1.3J	UN0396	II	1.3J	109	None	62	None	Forbidden	Forbidden	05	25, 23E
	Rocket motors with hypergolic liquids *with or without an expelling charge.*	1.3L	UN0250	II	1.3L	109	None	62	None	Forbidden	Forbidden	05	25, 14E, 15E
	Rocket motors with hypergolic liquids *with or without an expelling charge.*	1.2L	UN0322	II	1.2L	109	None	62	None	Forbidden	Forbidden	05	25, 14E, 15E
	Rockets, line-throwing	1.2G	UN0238	II	1.2G		None	62	None	Forbidden	Forbidden	03	25
	Rockets, line-throwing	1.3G	UN0240	II	1.3G		None	62	None	Forbidden	75 kg	03	25
	Rockets, line-throwing	1.4G	UN0453	II	1.4G		None	62	None	Forbidden	75 kg	02	25
	Rockets, liquid fueled *with bursting charge.*	1.1J	UN0397	II	1.1J		None	62	None	Forbidden	Forbidden	05	25, 23E
	Rockets, liquid fueled *with bursting charge.*	1.2J	UN0398	II	1.2J		None	62	None	Forbidden	Forbidden	05	25, 23E
	Rockets, *with bursting charge.*	1.1F	UN0180	II	1.1F		None	62	None	Forbidden	Forbidden	05	25
	Rockets, *with bursting charge.*	1.1E	UN0181	II	1.1E		None	62	62	Forbidden	Forbidden	04	25
	Rockets, *with bursting charge.*	1.2E	UN0182	II	1.2E		None	62	62	Forbidden	Forbidden	04	25
	Rockets, *with bursting charge.*	1.2F	UN0295	II	1.2F		None	62	None	Forbidden	Forbidden	05	25
	Rockets, *with expelling charge.*	1.2C	UN0436	II	1.2C		None	62	62	Forbidden	Forbidden	04	25
	Rockets, *with expelling charge.*	1.3C	UN0437	II	1.3C		None	62	62	Forbidden	Forbidden	04	25
	Rockets, *with expelling charge.*	1.4C	UN0438	II	1.4C		None	62	62	Forbidden	75 kg	02	25
	Rockets, *with inert head*	1.3C	UN0183	II	1.3C		None	62	62	Forbidden	Forbidden	04	25
	Rockets, *with inert head*	1.2C	UN0502		1.2C		None	62	62	Forbidden	Forbidden	02	25, 5E
			*		*	* *		*		* *			
G	Samples, explosive, *other than initiating explosives.*		UN0190	II		113	None	62	None	Forbidden	Forbidden	05	25
			*		*	* *		*		* *			
	Signal devices, hand	1.4G	UN0191	II	1.4G		None	62	None	Forbidden	75 kg	02	25
	Signal devices, hand	1.4S	UN0373	II	1.4S		None	62	None	25 kg	100 kg	01	25
	Signals, distress, *ship*	1.1G	UN0194	II	1.1G		None	62	None	Forbidden	Forbidden	03	25
	Signals, distress, *ship*	1.3G	UN0195	II	1.3G		None	62	None	Forbidden	75 kg	03	25
	Signals, distress, *ship*	1.4G	UN0505		1.4G		None	62	None	Forbidden	75 kg	02	25
	Signals, distress, *ship*	1.4S	UN0506		1.4S		None	62	None	25 kg	100 kg	01	25
			*		*	* *		*		* *			
	Signals, railway track, explosive.	1.1G	UN0192	II	1.1G		None	62	None	Forbidden	Forbidden	03	25
	Signals, railway track, explosive.	1.4S	UN0193	II	1.4S		None	62	None	25 kg	100 kg	01	25

	Signals, railway track, explosive.	1.3G	UN0492			1.3G			None	62	None	Forbidden	Forbidden	03	25
	Signals, railway track, explosive.	1.4G	UN0493			1.4G			None	62	None	Forbidden	75 kg	02	25
			*			*	*	*		*		*	*		
	Signals, smoke	1.1G	UN0196		II	1.1G			None	62	None	Forbidden	Forbidden	03	25
	Signals, smoke	1.4G	UN0197		II	1.4G			None	62	None	Forbidden	75 kg	02	25
	Signals, smoke	1.2G	UN0313		II	1.2G			None	62	None	Forbidden	Forbidden	03	25
	Signals, smoke	1.3G	UN0487		II	1.3G			None	62	None	Forbidden	Forbidden	03	25
	Signals, smoke	1.4S	UN0507			1.4S			None	62	None	25 kg	100 kg	01	25
			*			*	*	*		*		*	*		
	Sodium dinitro-o-cresolate, *dry or wetted with less than 15 percent water, by mass.*	1.3C	UN0234		II	1.3C			None	62	None	Forbidden	Forbidden	04	25, 5E
			*			*	*	*		*		*	*		
	Sodium picramate, *dry or wetted with less than 20 percent water, by mass.*	1.3C	UN0235		II	1.3C			None	62	None	Forbidden	Forbidden	04	25, 5E
			*			*	*	*		*		*	*		
	Sounding devices, explosive.	1.2F	UN0204		II	1.2F			None	62	62	Forbidden	Forbidden	05	25
	Sounding devices, explosive.	1.1F	UN0296		II	1.1F			None	62	62	Forbidden	Forbidden	05	25
	Sounding devices, explosive.	1.1D	UN0374		II	1.1D			None	62	62	Forbidden	Forbidden	04	25
	Sounding devices, explosive.	1.2D	UN0375		II	1.2D			None	62	62	Forbidden	Forbidden	04	25
			*			*	*	*		*		*	*		
G	Substances, explosive, n.o.s.	1.1L	UN0357		II	1.1L	101		None	62	None	Forbidden	Forbidden	05	25, 14E, 15E
G	Substances, explosive, n.o.s.	1.2L	UN0358		II	1.2L	101		None	62	None	Forbidden	Forbidden	05	25, 14E, 15E
G	Substances, explosive, n.o.s.	1.3L	UN0359		II	1.3L	101		None	62	None	Forbidden	Forbidden	05	25, 14E, 15E
G	Substances, explosive, n.o.s.	1.1A	UN0473		II	1.1A	101, 111		None	62	None	Forbidden	Forbidden	05	25
G	Substances, explosive, n.o.s.	1.1C	UN0474		II	1.1C	101		None	62	None	Forbidden	Forbidden	04	25
G	Substances, explosive, n.o.s.	1.1D	UN0475		II	1.1D	101		None	62	None	Forbidden	Forbidden	04	25
G	Substances, explosive, n.o.s.	1.1G	UN0476		II	1.1G	101		None	62	None	Forbidden	Forbidden	03	25
G	Substances, explosive, n.o.s.	1.3C	UN0477		II	1.3C	101		None	62	None	Forbidden	Forbidden	04	25
G	Substances, explosive, n.o.s.	1.3G	UN0478		II	1.3G	101		None	62	None	Forbidden	Forbidden	03	25
G	Substances, explosive, n.o.s.	1.4C	UN0479		II	1.4C	101		None	62	None	Forbidden	75 kg	02	25
G	Substances, explosive, n.o.s.	1.4D	UN0480		II	1.4D	101		None	62	None	Forbidden	75 kg	02	25
G	Substances, explosive, n.o.s.	1.4S	UN0481		II	1.4S	101		None	62	None	25 kg	75 kg	01	25
G	Substances, explosive, n.o.s.	1.4G	UN0485		II	1.4G	101		None	62	None	Forbidden	75 kg	02	25
G	Substances, explosive, very insensitive, n.o.s. *or* Substances, EVI, n.o.s.	1.5D	UN0482		II	1.5D	101		None	62	None	Forbidden	Forbidden	03	25
			*			*	*	*		*		*	*		
	Sulfuric acid, fuming *with 30 percent or more free sulfur trioxide.*	8	UN1831		I	8, 6.1	2, B9, B14, B32, B77, B84, N34, T20, TP2, TP12, TP13.		None	227	244	Forbidden	Forbidden	C	
			*			*	*	*		*		*	*		
	Tetranitroaniline	1.1D	UN0207		II	1.1D			None	62	None	Forbidden	Forbidden	04	25

Symbols	Hazardous materials descriptions and proper shipping names	Hazard class or division	Identification numbers	PG	Label codes	Special provisions (§ 172.102)	(8) Packaging (§ 173.***) Exceptions	Non-bulk	Bulk	(9) Quantity limitations (see §§ 173.27 and 175.75) Passenger aircraft/rail	Cargo aircraft only	(10) Vessel stowage Location	Other
(1)	(2)	(3)	(4)	(5)	(6)	(7)	(8A)	(8B)	(8C)	(9A)	(9B)	(10A)	(10B)
			*		*	* *		*		*	*		
	Tetrazol-1-acetic acid	1.4C	UN0407	II	1.4C		None	62	None	Forbidden	75 kg	02	25
	1H-Tetrazole	1.1D	UN0504		1.1D		None	62	None	Forbidden	Forbidden	04	25, 5E
			*		*	* *		*		*	*		
	Torpedoes, liquid fueled, *with inert head.*	1.3J	UN0450	II	1.3J			62	None	Forbidden	Forbidden	05	25, 23E
	Torpedoes, liquid fueled, *with or without bursting charge.*	1.1J	UN0449	II	1.1J			62	None	Forbidden	Forbidden	05	25, 23E
	Torpedoes *with bursting charge.*	1.1E	UN0329	II	1.1E			62	62	Forbidden	Forbidden	04	25
	Torpedoes *with bursting charge.*	1.1F	UN0330	II	1.1F			62	None	Forbidden	Forbidden	05	25
	Torpedoes *with bursting charge.*	1.1D	UN0451	II	1.1D			62	62	Forbidden	Forbidden	04	25
			*		*	* *		*		*	*		
D	Toy Caps	1.4S	NA0337	II	1.4S		None	62	None	25 kg	100 kg	01	25
	Tracers for ammunition	1.3G	UN0212	II	1.3G		None	62	None	Forbidden	Forbidden	03	25
	Tracers for ammunition	1.4G	UN0306	II	1.4G		None	62	None	Forbidden	75 kg	02	25
			*		*	* *		*		*	*		
	Trinitro-m-cresol	1.1D	UN0216	II	1.1D		None	62	None	Forbidden	Forbidden	04	25, 5E
			*		*	* *		*		*	*		
	Trinitroaniline *or* Picramide.	1.1D	UN0153	II	1.1D		None	62	None	Forbidden	Forbidden	04	25
	Trinitroanisole	1.1D	UN0213	II	1.1D		None	62	None	Forbidden	Forbidden	04	25
			*		*	* *		*		*	*		
	Trinitrobenzene, *dry or wetted with less than 30 percent water, by mass.*	1.1D	UN0214	II	1.1D		None	62	None	Forbidden	Forbidden	04	25
			*		*	* *		*		*	*		
	Trinitrobenzenesulfonic acid.	1.1D	UN0386	II	1.1D		None	62	None	Forbidden	Forbidden	04	25, 5E
	Trinitrobenzoic acid, *dry or wetted with less than 30 percent water, by mass.*	1.1D	UN0215	II	1.1D		None	62	None	Forbidden	Forbidden	04	25
			*		*	* *		*		*	*		
	Trinitrochlorobenzene *or* Picryl chloride.	1.1D	UN0155	II	1.1D		None	62	None	Forbidden	Forbidden	04	25
			*		*	* *		*		*	*		
	Trinitrofluorenone	1.1D	UN0387	II	1.1D		None	62	None	Forbidden	Forbidden	04	25
			*		*	* *		*		*	*		
	Trinitronaphthalene	1.1D	UN0217	II	1.1D		None	62	None	Forbidden	Forbidden	04	25
	Trinitrophenetole	1.1D	UN0218	II	1.1D		None	62	None	Forbidden	Forbidden	04	25
			*		*	* *		*		*	*		
	Trinitrophenol *or* Picric acid, *dry or wetted with less than 30 percent water, by mass.*	1.1D	UN0154	II	1.1D		None	62	None	Forbidden	Forbidden	04	25, 5E
			*		*	* *		*		*	*		
	Trinitrophenylmethylnitramine *or* Tetryl.	1.1D	UN0208	II	1.1D		None	62	None	Forbidden	Forbidden	04	25

Trinitroresorcinol *or* Styphnic acid, *dry or wetted with less than 20 percent water, or mixture of alcohol and water, by mass.*	1.1D	UN0219	II	1.1D		None	62	None	Forbidden	Forbidden	04	25, 5E
Trinitroresorcinol, wetted *or* Styphnic acid, wetted *with not less than 20 percent water, or mixture of alcohol and water by mass.*	1.1D	UN0394	II	1.1D		None	62	None	Forbidden	Forbidden	04	25, 5E
*		*	*	*	*	*	*	*	*	*		
Trinitrotoluene and Trinitrobenzene mixtures *or* TNT and trinitrobenzene mixtures *or* TNT and hexanitrostilbene mixtures *or* Trinitrotoluene and hexanitrostilnene mixtures.	1.1D	UN0388	II	1.1D		None	62	None	Forbidden	Forbidden	04	25
Trinitrotoluene mixtures containing Trinitrobenzene and Hexanitrostilbene *or* TNT mixtures containing trinitrobenzene and hexanitrostilbene.	1.1D	UN0389	II	1.1D		None	62	None	Forbidden	Forbidden	04	25
Trinitrotoluene *or* TNT, *dry or wetted with less than 30 percent water, by mass.*	1.1D	UN0209	II	1.1D		None	62	None	Forbidden	Forbidden	04	25
*		*	*	*	*	*	*	*	*	*		
Tritonal	1.1D	UN0390	II	1.1D		None	62	None	Forbidden	Forbidden	04	25
*		*	*	*	*	*	*	*	*	*		
Urea nitrate, *dry or wetted with less than 20 percent water, by mass.*	1.1D	UN0220	II	1.1D	119	None	62	None	Forbidden	Forbidden	04	25
*		*	*	*	*	*	*	*	*	*		
Warheads, rocket *with burster or expelling charge.*	1.4D	UN0370	II	1.4D		None	62	62	Forbidden	75 kg	02	25
Warheads, rocket *with burster or expelling charge.*	1.4F	UN0371	II	1.4F		None	62	None	Forbidden	Forbidden	05	25
Warheads, rocket *with bursting charge.*	1.1D	UN0286	II	1.1D		None	62	62	Forbidden	Forbidden	04	25
Warheads, rocket *with bursting charge.*	1.2D	UN0287	II	1.2D		None	62	62	Forbidden	Forbidden	04	25
Warheads, rocket *with bursting charge.*	1.1F	UN0369	II	1.1F		None	62	None	Forbidden	Forbidden	05	25
Warheads, torpedo *with bursting charge.*	1.1D	UN0221	II	1.1D		None	62	62	Forbidden	Forbidden	04	25
*		*	*	*	*	*	*	*	*	*		
Zirconium picramate, *dry or wetted with less than 20 percent water, by mass.*	1.3C	UN0236	II	1.3C		None	62	None	Forbidden	Forbidden	04	25, 5E
*		*	*	*	*	*	*	*	*	*		

■ 7. In § 172.102, in paragraph (c)(1), special provision 16 is revised as follows:

§ 172.102 Special provisions

* * * * *

(c) * * *

(1) * * *

16 This description applies to smokeless powder and other solid propellants that are used as powder for small arms and have been classed as Division 1.3C, 1.4C and Division 4.1 in accordance with § 173.56 of this subchapter.

* * * * *

■ 8. In § 172.202, paragraph (a)(6)(vii) is revised as follows;

§ 172.202 Descripton of hazardous material on shipping papers.

(a) * * *

(6) * * *

(vii) For hazardous materials in limited quantities, the total net quantity per package must be shown unless a gross mass is indicated in Column 4 of § 173.27 Table 3, in which case the total gross mass per package must be shown. Where different hazardous materials in limited quantities are packed together in the same outer packaging, when a gross mass is indicated Column 4 of § 173.27 Table 3, the net quantity of each hazardous material must be shown in addition to the gross mass of the completed package.

* * * * *

■ 9. In § 172.301, paragraph (a)(1)(i) is revised to read as follows:

§ 172.301 General marking requirements for non-bulk packagings.

(a) * * *

(1) * * *

(i) *Transitional exception.* For domestic transportation, until January 1, 2017, the identification number markings are not subject to the minimum size requirements specified in this paragraph (a)(1).

* * * * *

■ 10. In § 172.315, paragraph (d)(1) is revised to read as follows:

§ 172.315 Limited quantities.

* * * * *

(d) *Transitional exceptions.* (1) *Alternative markings.* Except for transportation by aircraft and until December 31, 2015, a package containing a limited quantity may continue to be marked in accordance with the requirements of this section in effect on October 1, 2010 (i.e., square-on-point with identification number only) as an alternative to the marking required by paragraph (a) of this section.

* * * * *

■ 11. In § 172.316, paragraph (a) is revised to read as follows:

§ 172.316 Packagings containing materials classed as ORM–D.

(a) Each non-bulk packaging containing a material classed as ORM–D must be marked on at least one side or end with the ORM–D designation immediately following or below the proper shipping name of the material. The ORM designation must be placed within a rectangle that is approximately 6.3 mm (0.25 inches) larger on each side than the designation. Until December 31, 2020, the designation ORM–D is for an ORM–D material, as defined in § 173.144, that is packaged in accordance with §§ 173.63(b), 173.150 through 173.156, and 173.306.

* * * * *

■ 12. In § 172.336, paragraph (c) is revised to read as follows:

§ 172.336 Identification numbers.

* * * * *

(c) Identification Numbers are not required:

Packaging:	*When:*	*Then the alternative marking requirement is:*
On the ends of portable tanks, cargo tanks, or tank cars.	They have more than one compartment and hazardous materials with different identification numbers are being transported therein.	The identification numbers on the sides of the tank are displayed in the same sequence as the compartments containing the materials they identify.
On cargo tanks	They contain only gasoline	The tank is marked ''Gasoline'' on each side and rear in letters no less than 50 mm (2 inches) high, or is placarded in accordance with § 172.542(c).
On cargo tanks	They contain only fuel oil	The cargo tank is marked ''Fuel Oil'' on each side and rear in letters no less than 50 mm (2 inches) high, or is placarded in accordance with § 172.544(c).
On one end of nurse tanks if that end contains valves, fittings, regulators or gauges when those appurtenances prevent the markings and placard from being properly placed and visible.	They meet the provisions of § 173.315(m) of this subchapter.	N/A.
On cargo tanks, including compartmented cargo tanks, or tank cars.	They contain more than one petroleum distillate fuel.	The identification number for the liquid petroleum distillate fuel having the lowest flash point is displayed. If the cargo tank also contains gasoline and alcohol fuel blends consisting of more than 10% ethanol the identification number ''3475'' or ''1987,'' as appropriate, must also be displayed.

* * * * *

PART 173—SHIPPERS—GENERAL REQUIREMENTS FOR SHIPMENTS AND PACKAGINGS

■ 13. The authority citation for part 173 continues to read as follows:

Authority: 49 U.S.C. 5101–5128, 44701; 49 CFR 1.81 and 1.97.

■ 14. In § 173.6, in paragraph (a)(6), the first sentence is revised to read as follows:

§ 173.6 Materials of trade exceptions.

* * * * *

(a) * * *

(6) A limited quantity package prepared in accordance with §§ 173.63(b), 173.150, 173.151(b) and (c), 173.152, 173.153, 173.154, 173.155, 173.161, 173.165, 173.167, 173.306(i), or 173.309(d) of this subchapter. * * *

* * * * *

■ 15. In § 173.22, paragraphs (a)(4)(ii) and (iii) are revised to read as follows:

§ 173.22 Shipper's responsibility.

(a) * * *

(4) * * *

(ii) For other than a bulk package or a cylinder, a person must retain a copy of the manufacturer's notification,

including closure instructions (*see* § 178.2(c) of this subchapter). For a bulk package or a cylinder, a person must retain a copy of the manufacturer's notification, including closure instructions (*see* § 178.2(c) of this subchapter), unless permanently embossed or printed on the package. A copy of the manufacturer's notification, including closure instructions (*see* § 178.2(c) of this subchapter), unless permanently embossed or printed on the package when applicable, must be made available for inspection by a representative of the Department upon request for at least 90 days once the package is offered to the initial carrier for transportation in commerce. Subsequent offerors of a filled and otherwise properly prepared unaltered package are not required to maintain manufacturer notification (including closure instructions).

(iii) When applicable, a person must retain a copy of any supporting documentation used to determine an equivalent level of performance under the selective testing variation in § 178.601(g)(1) of this subchapter. Such documentation is to be retained by the person certifying compliance with § 178.601(g)(1), as prescribed in § 178.601(l), and retained as prescribed in paragraph (a)(4)(ii) of this section.

* * * * *

■ 16. In § 173.24, paragraph (i) is revised to read as follows:

§ 173.24 General requirements for packagings and packages.

* * * * *

(i) *Air transportation.* Except as provided in subpart C of part 171 of this subchapter, packages prepared under § 173.167 of this part, or packages prepared under Packing Instruction Y963 of the ICAO Technical Instructions, packages offered or intended for transportation by aircraft must conform to the general requirements for transportation by aircraft in § 173.27.

■ 17. In § 173.25, paragraphs (a)(6) and (7) are revised to read as follows:

§ 173.25 Authorized packagings and overpacks.

(a) * * *

(6) For limited quantities and ORM material, the overpack is marked with a limited quantity marking prescribed in § 172.315 of this subchapter or, the ORM marking prescribed in § 172.316 of this subchapter, unless a limited quantity or ORM marking representative of the hazardous material in the overpack is visible.

(7) For excepted quantities, the overpack is marked with the required marking of § 173.4a of this part unless visible.

* * * * *

■ 18. In § 173.27, paragraph (f)(2)(i)(F) is revised and in paragraph (f)(3), the Class 9 entries in Table 3 are revised to read as follows:

§ 173.27 General requirements for transportation by aircraft.

* * * * *

(f) * * *

(2) * * *

(i) * * *

(F) Class 8 (corrosive) materials UN2794, UN2795, UN2803, UN2809, UN3028, UN3506; and

* * * * *

(3) * * *

TABLE 3—MAXIMUM NET QUANTITY OF EACH INNER AND OUTER PACKAGING FOR MATERIALS AUTHORIZED FOR TRANSPORTATION AS LIMITED QUANTITY BY AIRCRAFT

Hazard class or division	Maximum authorized net quantity *of each inner packaging*		Maximum authorized net quantity *of each outer package*	Notes
	Glass, earthenware or fiber inner packagings	Metal or plastic inner packagings		
*	*	*	*	* * *
Class 9 (liquid material).	30 mL (UN3316); 5.0L (UN1941, UN1990, UN3082, UN3334).	30 mL (UN3316); 5.0L (UN1941, UN1990, UN3082, UN3334).	1 kg (UN3316); 30 kg gross (all other authorized Class 9 material).	*Authorized materials:* UN1941, UN1990, UN2071, UN3077, UN3082, UN3334, and UN3335. Additionally, Consumer commodity (ID8000) in accordance with § 173.167 of this part and Chemical kit or First aid kit (UN3316) in accordance with § 173.161 of this part are authorized.
Class 9 (solid material).	100 g (UN3316); 5.0 kg (UN2071, UN3077, UN3335).	100 g (UN3316); 5.0 kg (UN2071, UN3077, UN3335).	1 kg (UN3316); 30 kg gross (all other authorized Class 9 material).	

* * * * *

■ 19. In § 173.62, in paragraph (c), in the Table of Packing Methods, Packing Instructions 112(b), 116, and 130 are revised to read as follows:

§ 173.62 Specific packaging requirements for explosives.

* * * * *

(c) * * *

TABLE OF PACKING METHODS

Packing instruction	Inner packagings	Intermediate packagings	Outer packagings
* *	*	*	* *
112(b)	Bags	Bags	Bags.
* *	*	*	* *
130	Not necessary	Not necessary	Boxes.
Particular Packaging Requirements:			

TABLE OF PACKING METHODS—Continued

Packing instruction	Inner packagings	Intermediate packagings	Outer packagings
1. The following applies to UN 0006, 0009, 0010, 0015, 0016, 0018, 0019, 0034, 0035, 0038, 0039, 0048, 0056, 0137, 0138, 0168, 0169, 0171, 0181, 0182, 0183, 0186, 0221, 0238, 0243, 0244, 0245, 0246, 0254, 0280, 0281, 0286, 0287, 0297, 0299, 0300, 0301, 0303, 0321, 0328, 0329, 0344, 0345, 0346, 0347, 0362, 0363, 0370, 0412, 0424, 0425, 0434, 0435, 0436, 0437, 0438, 0451, 0459 and 0488. Large and robust explosives articles, normally intended for military use, without their means of initiation or with their means of initiation containing at least two effective protective features, may be carried unpackaged. When such articles have propelling charges or are self-propelled, their ignition systems must be protected against stimuli encountered during normal conditions of transport. A negative result in Test Series 4 on an unpackaged article indicates that the article can be considered for transport unpackaged. Such unpackaged articles may be fixed to cradles or contained in crates or other suitable handling devices.	.....	.....	Steel (4A). Aluminum (4B). Other metal (4N). Wood natural, ordinary (4C1). Wood natural, sift-proof walls (4C2). Plywood (4D). Reconstituted wood (4F). Fiberboard (4G). Plastics, expanded (4H1). Plastics, solid (4H2). Drums. Steel (1A1 or 1A2). Aluminum (1B1 or 1B2). Other metal (1N1 or 1N2). Plywood (1D). Fiber (1G). Plastics (1H1 or 1H2). Large Packagings. Steel (50A). Aluminum (50B). Metal other than steel or aluminum (50N). Rigid plastics (50H). Natural wood (50C). Plywood (50D). Reconstituted wood (50F). Rigid fiberboard (50G).
2. Subject to approval by the Associate Administrator, large explosive articles, as part of their operational safety and suitability tests, subjected to testing that meets the intentions of Test Series 4 of the UN Manual of Tests and Criteria with successful test results, may be offered for transportation in accordance with the requirements of this subchapter			
* *	*	*	* * *

■ 20. In § 173.63 paragraph (b) is revised to read as follows:

§ 173.63 Packaging exceptions.

* * * * *

(b) *Limited quantities of Cartridges, small arms, Cartridges, power device, Cartridges for tools, blank, and Cases, cartridge, empty with primer.* (1)(i) Cartridges, small arms, Cartridges, power device (*used to project fastening devices*), Cartridges for tools, blank, and Cases, cartridge, empty with primer that have been classed as Division 1.4S explosive may be offered for transportation and transported as limited quantities when packaged in accordance with paragraph (b)(2) of this section. Packages containing such articles may be marked with either the marking prescribed in § 172.315(a) or (b) of this subchapter and offered for transportation and transported by any mode. For transportation by aircraft, the package must conform to the applicable requirements of § 173.27 of this part. In addition, packages containing such articles offered for transportation by aircraft must be marked with the proper shipping name as prescribed in the § 172.101 Hazardous Materials Table of this subchapter. Packages containing such articles are not subject to the shipping paper requirements of subpart C of part 172 of this subchapter unless the material meets the definition of a hazardous substance, hazardous waste, marine pollutant, or is offered for transportation and transported by aircraft or vessel. Additionally, packages containing such articles are excepted from the requirements of subparts E (Labeling) and F (Placarding) of part 172 of this subchapter.

(ii) Until December 31, 2012, a package containing such articles may be marked with the proper shipping name ''Cartridges, small arms'' or ''Cartridges, power device (*used to project fastening devices*)'' and reclassed as ''ORM–D–AIR'' material if it contains properly packaged articles as authorized by this subchapter on October 1, 2010. Additionally, for transportation by aircraft, Cartridge, power devices must be successfully tested under the UN Test Series 6(d) criteria for reclassification as ORM–D–AIR material effective July 1, 2011. Until December 31, 2020, a package containing such articles may be marked with the proper shipping name ''Cartridges, small arms'' or ''Cartridges, power device (*used to project fastening devices*),'' ''Cartridges for tools, blank,'' and ''Cases, cartridge empty with primer'' and reclassed as ''ORM–D'' material if it contains properly packaged articles as authorized by this subchapter on October 1, 2010.

(iii) Cartridges, small arms, Cartridges, power device (*used to project fastening devices*), Cartridges for tools, blank, and Cases, cartridge empty with primer that may be shipped as a limited quantity or ORM–D material are as follows:

(A) Ammunition for rifle, pistol or shotgun;

(B) Ammunition with inert projectiles or blank ammunition;

(C) Ammunition having no tear gas, incendiary, or detonating explosive projectiles;

(D) Ammunition not exceeding 12.7 mm (50 caliber or 0.5 inch) for rifle or pistol, cartridges or 8 gauge for shotshells;

(E) Cartridges for tools, blank; and

(F) Cases, cartridge, empty with primer.

(G) Cartridges, power device (*used to project fastening devices*).

(2) Packaging for Cartridges, small arms, Cartridges for tools, blank, Cases, cartridge empty with primer, and eligible Cartridges, power device as limited quantity or ORM–D material must be as follows:

(i) Ammunition must be packed in inside boxes, or in partitions that fit snugly in the outside packaging, or in metal clips;

(ii) Primers must be protected from accidental initiation;

(iii) Inside boxes, partitions or metal clips must be packed in securely-closed strong outside packagings;

(iv) Maximum gross weight is limited to 30 kg (66 pounds) per package; and

(v) Cartridges for tools, blank, Cartridges, power devices which are used to project fastening devices, Cases, cartridge, empty with primer, and 22 caliber rim-fire cartridges may be packaged loose in strong outside packagings.

* * * * *

■ 21. Section 173.144 is revised to read as follows:

§ 173.144 Other Regulated Material (ORM)—Definitions.

Until December 31, 2020 and for the purposes of this subchapter, ''ORM–D material'' means a material such as a Consumer commodity, Cartridges, small arms, Cartridges, power devices *(used to project fastening devices),* Cartridges for tools, blank, and Cases, cartridge, empty with primer, which, although otherwise subject to the regulations of this subchapter, presents a limited hazard during transportation due to its form, quantity and packaging. The article or substance must be a material for which exceptions are provided in Column (8A) of the § 172.101 Hazardous Materials Table.

■ 22. In § 173.150, paragraphs (d)(2)(ii) and (iii) are revised to read as follows:

§ 173.150 Exceptions for Class 3 (flammable and combustible liquids).

* * * * *

(d) * * *

(2) * * *

(ii) For transportation aboard a passenger-carrying aircraft, contains more than 24% but not more than 70% alcohol by volume when in unopened retail packagings not exceeding 5 liters (1.3 gallons) carried in carry-on or checked baggage, with a total net quantity per person of 5 liters (1.3) gallons (See § 175.10(a)(4) of this subchapter); or

(iii) When carried as cargo, contains more than 24% but not more than 70% alcohol by volume in an inner packaging not exceeding 5 L (1.3 gallons).

* * * * *

■ 23. In Section 173.156:

■ a. Paragraph (b)(1) introductory text is revised.

■ b. Paragraph (b)(2)(vi) is removed.

The revision reads as follows:

§ 173.156 Exceptions for limited quantity and ORM.

* * * * *

(b) * * *

(1) Strong outer packagings as specified in this part, marking requirements specified in subpart D of part 172 of this subchapter, and the 30 kg (66 pounds) gross weight limitation when—

* * * * *

■ 24. Section 173.165 is revised to read as follows:

§ 173.165 Polyester resin kits.

(a) Polyester resin kits consisting of a base material component (Class 3, Packing Group II or III) and an activator component (Type D, E, or F organic peroxide that does not require temperature control)—

(1) The organic peroxide component must be packed in inner packagings not over 125 mL (4.22 fluid ounces) net capacity each for liquids or 500 g (17.64 ounces) net capacity each for solids.

(2)(i) Except for transportation by aircraft, the flammable liquid component must be packaged in suitable inner packagings.

(ii) For transportation by aircraft, a Packing Group II base material is limited to a quantity of 5 L (1.3 gallons) in metal or plastic inner packagings and 1 L (0.3 gallons) in glass inner packagings. A Packing Group III base material is limited to a quantity of 10 L (2.6 gallons) in metal or plastic inner packagings and 2.5 L (0.66 gallons) in glass inner packagings.

(3) If the flammable liquid component and the organic peroxide component will not interact dangerously in the event of leakage, they may be packed in the same outer packaging.

(4) The Packing Group assigned will be II or III, according to the criteria for Class 3, applied to the base material. Additionally, polyester resin kits must be packaged in specification combination packagings, based on the performance level required of the base material (II or III) contained within the kit, as prescribed in §§ 173.202 or 173.203 of this subchapter, as appropriate.

(5) For transportation by aircraft, the following additional requirements apply:

(i) Closures on inner packagings containing liquids must be secured by secondary means;

(ii) Inner packagings containing liquids must be capable of meeting the pressure differential requirements prescribed in § 173.27(c); and

(iii) The total quantity of activator and base material may not exceed 5 kg (11 lbs) per package for a Packing Group II base material. The total quantity of activator and base material may not exceed 10 kg (22 lbs) per package for a Packing Group III base material. The total quantity of polyester resin kits per package is calculated on a one-to-one basis (i.e., 1 L equals 1 kg).

(b) Polyester resin kits are eligible for the Small Quantity exceptions in § 173.4 and the Excepted Quantity exceptions in § 173.4a, as applicable.

(c) *Limited quantities.* Limited quantity packages of polyester resin kits are excepted from labeling requirements, unless the material is offered for transportation or transported by aircraft, and are excepted from the specification packaging requirements of this subchapter when packaged in combination packagings according to this paragraph. For transportation by aircraft, only hazardous material authorized aboard passenger-carrying aircraft may be transported as a limited quantity. A limited quantity package that conforms to the provisions of this section is not subject to the shipping paper requirements of subpart C of part 172 of this subchapter, unless the material meets the definition of a hazardous substance, hazardous waste, marine pollutant, or is offered for transportation and transported by aircraft or vessel, and is eligible for the exceptions provided in § 173.156 of this part. In addition, shipments of limited quantities are not subject to subpart F (Placarding) of part 172 of this subchapter. Each package must conform to the general packaging requirements of subpart B of this part and may not exceed 30 kg (66 pounds) gross weight.

(1) For other than transportation by aircraft, the organic peroxide component must be packed in inner packagings not over 125 mL (4.22 fluid ounces) net capacity each for liquids or 500 g (17.64 ounces) net capacity each for solids. For transportation by aircraft, the organic peroxide component must be packed in inner packagings not over 30 mL (4.22 fluid ounces) net capacity each for liquids or 100 g (17.64 ounces) net capacity each for solids.

(2) Except for transportation by aircraft, the flammable liquid component must be packed in inner packagings not over 5 L (1.3 gallons) net capacity each for a Packing Group II and

Packing Group III liquid. For transportation by aircraft, the flammable liquid component must be packed in inner packagings not over 1 L (0.26 gallons) net capacity each for a Packing Group II material. The flammable liquid component must be packed in metal or plastic inner packagings not over 5.0 L (1.3 gallons) net capacity each or glass inner packagings not over 2.5 L (0.66 gallons) net capacity each for a Packing Group III material.

(3) If the flammable liquid component and the organic peroxide component will not interact dangerously in the event of leakage, they may be packed in the same outer packaging.

(4) For transportation by aircraft, the following additional requirements apply:

(i) Closures on inner packagings containing liquids must be secured by secondary means as prescribed in § 173.27(d);

(ii) Inner packagings containing liquids must be capable of meeting the pressure differential requirements prescribed in § 173.27(c);

(iii) The total quantity of activator and base material may not exceed 1 kg (2.2 lbs) per package for a Packing Group II base material. The total quantity of activator and base material may not exceed 5 kg (11 lbs) per package for a Packing Group III base material. The total quantity of polyester resin kits per package is calculated on a one-to-one basis (i.e., 1 L equals 1 kg);

(iv) *Drop test capability.* Fragile inner packagings must be packaged to prevent failure under conditions normally incident to transport. Packages of consumer commodities must be capable of withstanding a 1.2 m drop on solid concrete in the position most likely to cause damage; and

(v) *Stack test capability.* Packages of consumer commodities must be capable of withstanding, without failure or leakage of any inner packaging and without any significant reduction in effectiveness, a force applied to the top surface for a duration of 24 hours equivalent to the total weight of identical packages if stacked to a height of 3.0 m (including the test sample).

(d) *Consumer commodities.* Until December 31, 2020, a limited quantity package of polyester resin kits that are also consumer commodities as defined in § 171.8 of this subchapter may be renamed ''Consumer commodity'' and reclassed as ORM–D or, until December 31, 2012, as ORM–D–AIR material and offered for transportation and transported in accordance with the applicable provisions of this subchapter in effect on October 1, 2010.

■ 25. In § 173.167, paragraph (a) introductory text is revised to read as follows:

§ 173.167 Consumer commodities.

(a) Effective January 1, 2013, a ''consumer commodity'' (see § 171.8 of this subchapter) when offered for transportation by aircraft may only include articles or substances of Class 2 (non-toxic aerosols only), Class 3 (Packing Group II and III only), Division 6.1 (Packing Group III only), UN3077, UN3082, UN3175, UN3334, and UN3335, provided such materials do not have a subsidiary risk and are authorized aboard a passenger-carrying aircraft. Consumer commodities are excepted from the specification outer packaging requirements of this subchapter. Packages prepared under the requirements of this section are excepted from labeling and shipping papers when transported by highway or rail. Except as indicated in § 173.24(i), each completed package must conform to §§ 173.24 and 173.24a of this subchapter. Additionally, except for the pressure differential requirements in § 173.27(c), the requirements of § 173.27 do not apply to packages prepared in accordance with this section. Packages prepared under the requirements of this section may be offered for transportation and transported by all modes. As applicable, the following apply:

* * * * *

■ 26. In § 173.171, the introductory text and paragraphs (a), (c), and (d) are revised to read as follows:

§ 173.171 Smokeless powder for small arms.

Smokeless powder for small arms which has been classed in Division 1.3 or Division 1.4 may be reclassed in Division 4.1, for domestic transportation by motor vehicle, rail car, vessel, or cargo-only aircraft, subject to the following conditions:

(a) Powders that have been approved as Division 1.3C or Division 1.4C may be reclassed to Division 4.1 in accordance with §§ 173.56 and 173.58 of this part.

* * * * *

(c) Only combination packagings with inner packagings not exceeding 3.6 kg (8 pounds) net mass are authorized. Inner packagings must be arranged and protected so as to prevent simultaneous ignition of the contents. The complete package must be of the same type which has been examined as required in § 173.56 of this part.

(d) Inside packages that have been examined and approved by the Associate Administrator may be packaged in UN 4G fiberboard boxes meeting the Packing Group I performance level, provided all inside containers are packed to prevent shifting and the net weight of smokeless powder in any one box does not exceed 7.3 kg (16 pounds).

■ 27. In § 173.176, paragraphs (a)(2)(i) and (ii) are revised to read as follows;

§ 173.176 Capacitors.

(a) * * *

(2) * * *

(i) When a capacitor's energy storage capacity is less than or equal to 10 Wh or when the energy storage capacity of each capacitor in a module is less than or equal to 10 Wh, the capacitor or module must be protected against short circuit or be fitted with a metal strap connecting the terminals; or

(ii) When the energy storage capacity of a capacitor or a capacitor in a module is more than 10 Wh, the capacitor or module must be fitted with a metal strap connecting the terminals;

* * * * *

■ 28. In § 173.185, paragraph (a)(1) is revised to read as follows:

§ 173.185 Lithium cells and batteries.

(a) * * *

(1) Cells and batteries manufactured according to a type meeting the requirements of sub-section 38.3 of the Manual of Tests and Criteria, Revision 3, Amendment 1 or any subsequent revision and amendment applicable at the date of the type testing may continue to be transported, unless otherwise provided in this subchapter. Cell and battery types only meeting the requirements of the Manual of Tests and Criteria, Revision 3, are no longer valid. However, cells and batteries manufactured in conformity with such types before July 2003 may continue to be transported if all other applicable requirements are fulfilled.

* * * * *

■ 29. In § 173.225, the paragraph (c) ''Organic Peroxide Table'' and the paragraph (e) ''Organic Peroxide IBC Table'' are amended by removing the entries under ''[REMOVE]'' and adding entries under ''[ADD]'' in alphabetical order to read as follows:

§ 173.225 Packaging requirements and other provisions for organic peroxides.

* * * * *

(c) * * *

ORGANIC PEROXIDE TABLE

Technical name	ID No.	Concentration (mass %)	Diluent (mass %)			Water (mass %)	Packing method	Temperature (°C)		Notes
			A	B	I			Control	Emergency	
(1)	(2)	(3)	(4a)	(4b)	(4c)	(5)	(6)	(7a)	(7b)	(8)
[REMOVE]										
*	*	*		*		*		*	*	
Diisopropyl peroxydicarbonate.	UN3115 ...	≤32	≥68	.....	.....	.....	OP7	−15	−5	.....
Diisopropyl peroxydicarbonate.	UN3115 ...	≤52	.....	≥48	.....	.....	OP7	−20	−10	.....
Diisopropyl peroxydicarbonate.	UN3115 ...	≤28	≥72	.....	.....	.....	OP7	−15	−5	.....
*	*	*		*		*		*	*	
[ADD]										
*	*	*		*		*		*	*	
Diisopropyl peroxydicarbonate.	UN3112 ...	>52–100	.....	.....	.....	.....	OP2	−15	−5	.....
Diisopropyl peroxydicarbonate.	UN3115 ...	≤52	.....	≥48	.....	.....	OP7	−20	−10	.....
Diisopropyl peroxydicarbonate.	UN3115 ...	≤32	≥68	.....	.....	.....	OP7	−15	−5	.....
*	*	*		*		*		*	*	

* * * * * (e) * * *

ORGANIC PEROXIDE IBC TABLE

UN No.	Organic peroxide	Type of IBC	Maximum quantity (liters)	Control temperature	Emergency temperature
	[REMOVE]				
3109	ORGANIC PEROXIDE, TYPE F, LIQUID.				
	tert-Butyl hydroperoxide, not more than 72% with water	31A	1250	.....	.....
	tert-Butyl peroxyacetate, not more than 32% in diluent type A	31A	1250	.....	.....
		31HA1	1000	.....	.....
	tert-Butyl peroxybenzoate, not more than 32% in diluent type A.	31A	1250	.....	.....
	tert-Butyl peroxy-3,5,5-trimethylhexanoate, not more than 37% in diluent type A.	31A	1250	.....	.....
		31HA1	1000	.....	.....
	Cumyl hydroperoxide, not more than 90% in diluent type A	31HA1	1250	.....	.....
	Dibenzoyl peroxide, not more than 42% as a stable dispersion	31H1	1000	.....	.....
	Di-tert-butyl peroxide, not more than 52% in diluent type B	31A	1250	.....	.....
		31HA1	1000	.....	.....
	1,1-Di-(tert-Butylperoxy) cyclohexane, not more than 37% in diluent type A.	31A	1250	.....	.....
	1,1-Di-(tert-butylperoxy) cyclohexane, not more than 42% in diluent type A.	31H1	1000	.....	.....
	Dicumyl peroxide, less than or equal to 100%	31A	1250	.....	.....
		31HA1	1000	.....	.....
	Diisobutyryl peroxide, not more than 28% as a stable dispersion in water.	31HA1	1000	−20 °C	−10 °C
		31A	1250	−20 °C	−10 °C
	Diisobutyryl peroxide, not more than 42% as a stable dispersion in water.	31HA1	1000	−25 °C	−15 °C
		31A	1250	−25 °C	−15 °C
	Dilauroyl peroxide, not more than 42%, stable dispersion, in water.	31HA1	1000	.....	.....
	Isopropyl cumyl hydroperoxide, not more than 72% in diluent type A.	31HA1	1250	.....	.....
	p-Menthyl hydroperoxide, not more than 72% in diluent type A	31HA1	1250	.....	.....
	Peroxyacetic acid, stabilized, not more than 17%	31A	1500	.....	.....
		31H1	1500	.....	.....
		31H2	1500	.....	.....
		31HA1	1500	.....	.....
	Peroxyacetic acid, with not more than 26% hydrogen peroxide	31A	1500	.....	.....

ORGANIC PEROXIDE IBC TABLE—Continued

UN No.	Organic peroxide	Type of IBC	Maximum quantity (liters)	Control temperature	Emergency temperature
		31HA1	1500		
	Peroxyacetic acid, type F, stabilized	31A	1500		
		31HA1	1500		
3110	ORGANIC PEROXIDE TYPE F, SOLID.				
	Dicumyl peroxide, less than or equal to 100%	31A	2000		
		31H1			
		31HA1			
3119	ORGANIC PEROXIDE, TYPE F, LIQUID, TEMPERATURE CONTROLLED.				
	tert-Amyl peroxypivalate, not more than 32% in diluent type A	31A	1250	+10 °C	+15 °C
	tert-Butyl peroxy-2-ethylhexanoate, not more than 32% in diluent type B.	31HA1	1000	+30 °C	+35 °C
		31A	1250	+30 °C	+35 °C
	tert-Butyl peroxyneodecanoate, not more than 32% in diluent type A.	31A	1250	0 °C	+10 °C
	tert-Butyl peroxyneodecanoate, not more than 52%, stable dispersion, in water.	31A	1250	−5 °C	+5 °C
	tert-Butyl peroxypivalate, not more than 27% in diluent type B	31HA1	1000	+10 °C	+15 °C
		31A	1250	+10 °C	+15 °C
	Dicyclohexylperoxydicarbonate, not more than 42% as a stable dispersion, in water.	31A	1250	+10 °C	+15 °C
	Di-(4-tert-butylcyclohexyl) peroxydicarbonate, not more than 42%, stable dispersion, in water.	31HA1	1000	+30 °C	+35 °C
	Dicetyl peroxydicarbonate, not more than 42%, stable dispersion, in water.	31HA1	1000	+30 °C	+35 °C
	Di-(2-ethylhexyl) peroxydicarbonate, not more than 62%, staple dispersion, in water.	31A	1250	−20 °C	−10 °C
	Dimyristyl peroxydicarbonate, not more than 42%, stable dispersion, in water.	31HA1	1000	+15 °C	+20 °C
	Di-(3,5,5-trimethylhexanoyl) peroxide, not more than 52% in diluent type A.	31HA1	1000	+10 °C	+15 °C
	Di-(2-neodecanoylperoxyisopropyl) benzene, not more than 42%, stable dispersion, in water.	31A	1250	−15 °C	−5 °C
	3-Hydroxy-1,1-dimethylbutyl peroxy-neodecanoate, not more than 52%, stable dispersion, in water.	31A	1250	−15 °C	−5 °C
	Di-(3,5,5-trimethylhexanoyl) peroxide, not more than 52%, stable dispersion, in water.	31A	1250	+10 °C	+15 °C
	1,1,3,3-Tetramethylbutyl peroxyneodecanoate, not more than 52%, stable dispersion, in water.	31A	1250	−5 °C	+5 °C
		31HA1	1000	−5 °C	+5 °C

* * * * * * *

[ADD]

3109	ORGANIC PEROXIDE, TYPE F, LIQUID.				
	tert-Butyl hydroperoxide, not more than 72% with water	31A	1250		
	tert-Butyl peroxyacetate, not more than 32% in diluent type A	31A	1250		
		31HA1	1000		
	tert-Butyl peroxybenzoate, not more than 32% in diluent type A.	31A	1250		
	tert-Butyl peroxy-3,5,5-trimethylhexanoate, not more than 37% in diluent type A.	31A	1250		
		31HA1	1000		
	Cumyl hydroperoxide, not more than 90% in diluent type A	31HA1	1250		
	Dibenzoyl peroxide, not more than 42% as a stable dispersion	31H1	1000		
	Di-tert-butyl peroxide, not more than 52% in diluent type B	31A	1250		
		31HA1	1000		
	1,1-Di-(tert-Butylperoxy) cyclohexane, not more than 37% in diluent type A.	31A	1250		
	1,1-Di-(tert-butylperoxy) cyclohexane, not more than 42% in diluent type A.	31H1	1000		
	Dicumyl peroxide, less than or equal to 100%	31A	1250		
		31HA1	1000		
	Dilauroyl peroxide, not more than 42%, stable dispersion, in water.	31HA1	1000		
	Isopropyl cumyl hydroperoxide, not more than 72% in diluent type A.	31HA1	1250		
	p-Menthyl hydroperoxide, not more than 72% in diluent type A	31HA1	1250		
	Peroxyacetic acid, stabilized, not more than 17%	31A	1500		
		31H1	1500		
		31H2	1500		

ORGANIC PEROXIDE IBC TABLE—Continued

UN No.	Organic peroxide	Type of IBC	Maximum quantity (liters)	Control temperature	Emergency temperature
		31HA1	1500		
	Peroxyacetic acid, with not more than 26% hydrogen peroxide	31A	1500		
		31HA1	1500		
	Peroxyacetic acid, type F, stabilized	31A	1500		
		31HA1	1500		
3110	ORGANIC PEROXIDE TYPE F, SOLID.				
	Dicumyl peroxide, less than or equal to 100%	31A	2000		
		31H1			
		31HA1			
3119	ORGANIC PEROXIDE, TYPE F, LIQUID, TEMPERATURE CONTROLLED.				
	tert-Amyl peroxypivalate, not more than 32% in diluent type A	31A	1250	+10 °C	+15 °C
	tert-Butyl peroxy-2-ethylhexanoate, not more than 32% in diluent type B.	31HA1	1000	+30 °C	+35 °C
		31A	1250	+30 °C	+35 °C
	tert-Butyl peroxyneodecanoate, not more than 32% in diluent type A.	31A	1250	0 °C	+10 °C
	tert-Butyl peroxyneodecanoate, not more than 52%, stable dispersion, in water.	31A	1250	−5 °C	+5 °C
	tert-Butyl peroxypivalate, not more than 27% in diluent type B	31HA1	1000	+10 °C	+15 °C
		31A	1250	+10 °C	+15 °C
	Di-(4-tert-butylcyclohexyl) peroxydicarbonate, not more than 42%, stable dispersion, in water.	31HA1	1000	+30 °C	+35 °C
	Dicetyl peroxydicarbonate, not more than 42%, stable dispersion, in water.	31HA1	1000	+30 °C	+35 °C
	Dicyclohexylperoxydicarbonate, not more than 42% as a stable dispersion, in water.	31A	1250	+10 °C	+15 °C
	Di-(2-ethylhexyl) peroxydicarbonate, not more than 62%, stable dispersion, in water.	31A	1250	−20 °C	−10 °C
	Diisobutyryl peroxide, not more than 28% as a stable dispersion in water.	31HA1	1000	−20 °C	−10 °C
		31A	1250	−20 °C	−10 °C
	Diisobutyryl peroxide, not more than 42% as a stable dispersion in water.	31HA1	1000	−25 °C	−15 °C
		31A	1250	−25 °C	−15 °C
	Dimyristyl peroxydicarbonate, not more than 42%, stable dispersion, in water.	31HA1	1000	+15 °C	+20 °C
	Di-(2-neodecanoylperoxyisopropyl) benzene, not more than 42%, stable dispersion, in water.	31A	1250	−15 °C	−5 °C
	Di-(3,5,5-trimethylhexanoyl) peroxide, not more than 52% in diluent type A.	31HA1	1000	+10 °C	+15 °C
		31A	1250	+10 °C	+15 °C
	Di-(3,5,5-trimethylhexanoyl) peroxide, not more than 52%, stable dispersion, in water.	31A	1250	+10 °C	+15 °C
	3-Hydroxy-1,1-dimethylbutyl peroxy-neodecanoate, not more than 52%, stable dispersion, in water.	31A	1250	−15 °C	−5 °C
	1,1,3,3-Tetramethylbutyl peroxyneodecanoate, not more than 52%, stable dispersion, in water.	31A	1250	−5 °C	+5 °C
		31HA1	1000	−5 °C	+5 °C

§ 173.230 [Amended]

■ 30. In § 173.230, paragraph (f)(3), remove the duplicate ''to'' preceding ''IEC 62282 6–100''

§ 173.301b [Amended]

■ 31. In § 173.301b, paragraph (d)(1), remove the period at the end of the sentence and add in its place a semicolon.

PART 175—CARRIAGE BY AIRCRAFT

■ 32. The authority citation for part 175 is revised to read as follows:

Authority: 49 U.S.C. 5101–5128; 44701; 49 CFR 1.81 and 1.97.

■ 33. In § 175.10:

■ a. Paragraphs (a)(15)(v)(C) and (a)(19)(vii) and (viii) are revised.

■ b. Paragraph (a)(21), the fourth paragraph, the second designation (ii) is redesignated as (iii).

■ c. Paragraph (a)(24) is revised.

The revisions read as follows:

§ 175.10 Exceptions for passengers, crewmembers, and air operators.

(a) * * *

(15) * * *

(v) * * *

(C) Is removed and placed in a strong, rigid packaging marked with the words ''not restricted'' in accordance with paragraph (c)(2) of § 172.102, Special provision 130, of this subchapter; or

* * * * *

(19) * * *

(vii) Each fuel cell and fuel cell cartridge must conform to IEC 62282–6–100 and IEC 62282–6–100 Amend. 1 (IBR; see § 171.7 of this subchapter) and must be marked with a manufacturer's certification that it conforms to the specification. In addition, each fuel cell cartridge must be marked with the

maximum quantity and type of fuel in the cartridge;

(viii) Interaction between fuel cells and integrated batteries in a device must conform to IEC 62282–6–100 and IEC 62282–6–100 Amend. 1 (IBR, see § 171.7 of this subchapter). Fuel cells whose sole function is to charge a battery in the device are not permitted; and

* * * * *

(24) Small cartridges fitted into devices with no more than four small cylinders of carbon dioxide or other suitable gas in Division 2.2. The water capacity of each cylinder must not exceed 50 mL (equivalent to a 28 g carbon dioxide cartridge), with the approval of the operator.

* * * * *

■ 34. Section 175.25 is revised to read as follows:

§ 175.25 Notification at air passenger facilities of hazardous materials restrictions.

(a) *Notices of requirements.* Each person who engages in for-hire air transportation of passengers must display notices of the requirements applicable to the carriage of hazardous materials aboard aircraft, and the penalties for failure to comply with those requirements in accordance with this section. Each notice must be legible, and be prominently displayed so it can be seen by passengers in locations where the aircraft operator issues tickets, checks baggage, and maintains aircraft boarding areas. At a minimum, each notice must communicate the following information:

(1) Federal law forbids the carriage of hazardous materials aboard aircraft in your luggage or on your person. A violation can result in five years' imprisonment and penalties of $250,000 or more (49 U.S.C. 5124). Hazardous materials include explosives, compressed gases, flammable liquids and solids, oxidizers, poisons, corrosives and radioactive materials. Examples: Paints, lighter fluid, fireworks, tear gases, oxygen bottles, and radio-pharmaceuticals.

(2) There are special exceptions for small quantities (up to 70 ounces total) of medicinal and toilet articles carried in your luggage and certain smoking materials carried on your person. For further information contact your airline representative.

(b) *Ticket purchase.* During the ticket purchase process, regardless if the process is completed remotely (*e.g.,* via the Internet or phone) or when completed at the airport, with or without assistance from another person (*e.g.,* automated check-in facility), the aircraft operator must ensure that information on the types of hazardous materials a passenger is forbidden to transport aboard an aircraft is provided to passengers. Information may be in text or in pictorial form and, effective January 1, 2015, must be such that the final ticket purchase cannot be completed until the passenger or a person acting on the passenger's behalf has indicated that it understands the restrictions on hazardous materials in baggage.

(c) *Check-in.* Effective January 1, 2015, when the flight check-in process is conducted remotely (*e.g.,* via the Internet or phone) or when completed at the airport, without assistance from another person (*e.g.,* automated check-in kiosk), the aircraft operator must ensure that information on the types of hazardous materials a passenger is forbidden to transport aboard an aircraft is provided to passengers. Information may be in text or in pictorial form and should be such that the check in process cannot be completed until the passenger or a person acting on the passenger's behalf has indicated that it understands the restrictions on hazardous materials in baggage.

(d) *Signage.* When the check in process is not conducted remotely (*e.g.,* at the airport with the assistance of an airline representative), passenger notification of permitted and forbidden hazardous materials may be completed through signage (electronic or otherwise), provided it is legible and prominently displayed.

■ 35. In § 175.75:

■ a. Paragraph (c) is revised.

■ b. Paragraph (e)(1) is revised.

■ c. In paragraph (f), in the QUANTITY AND LOADING TABLE, in Note 1, paragraphs b and d are revised and paragraph e is added.

The revisions and addition read as follows:

§ 175.75 Quantity limitations and cargo location.

* * * * *

(c) For each package containing a hazardous material acceptable for carriage aboard passenger-carrying aircraft, no more than 25 kg (55 pounds) net weight of hazardous material may be loaded in an inaccessible manner. In addition to the 25 kg limitation, an additional 75 kg (165 pounds) net weight of Division 2.2 (non-flammable compressed gas) may be loaded in an inaccessible manner. The requirements of this paragraph do not apply to Class 9, articles of Identification Numbers UN0012, UN0014, or UN0055 also meeting the requirements of § 173.63(b), and Limited or Excepted Quantity material.

* * * * *

(e) * * *

(1) Class 3, PG III (unless the substance is also labeled CORROSIVE), Class 6.1 (unless the substance is also labeled for any hazard class or division except FLAMMABLE LIQUID), Division 6.2, Class 7 (unless the hazardous material meets the definition of another hazard class), Class 9, articles of Identification Numbers UN0012, UN0014, or UN0055 also meeting the requirements of § 173.63(b), and those marked as a Limited Quantity or Excepted Quantity material.

* * * * *

(f) * * *

Note 1: * * *

b. Division 6.1 (unless the substance is also labeled for any hazard class or division except FLAMMABLE LIQUID)

* * * * *

d. Class 9, Limited Quantity or Excepted Quantity material.

e. Articles of Identification Numbers UN0012, UN0014, or UN0055 also meeting the requirements of § 173.63(b).

* * * * *

PART 176—CARRIAGE BY VESSEL

■ 36. The authority citation for part 176 is revised to read as follows:

Authority: 49 U.S.C. 5101–5128; 49 CFR 1.81 and 1.97.

■ 37. In § 176.905, paragraph (i) is revised to read as follows:

§ 176.905 Stowage of motor vehicles or mechanical equipment.

* * * * *

(i) Exceptions—A vehicle or mechanical equipment is excepted from the requirements of this subchapter if any of the following are met:

(1) The vehicle or mechanical equipment has an internal combustion engine using liquid fuel that has a flashpoint less than 38 °C (100 °F), the fuel tank is empty, and the engine is run until it stalls for lack of fuel;

(2) The vehicle or mechanical equipment has an internal combustion engine using liquid fuel that has a flashpoint of 38 °C (100 °F) or higher, the fuel tank contains 418 L (110 gallons) of fuel or less, and there are no fuel leaks in any portion of the fuel system;

(3) The vehicle or mechanical equipment is stowed in a hold or compartment designated by the administration of the country in which the vessel is registered as specially designed and approved for vehicles and mechanical equipment and there are no

signs of leakage from the battery, engine, fuel cell, compressed gas cylinder or accumulator, or fuel tank, as appropriate. For vehicles with batteries connected and fuel tanks containing gasoline transported by U.S. vessels, *see* 46 CFR 70.10–1 and 90.10–38;

(4) The vehicle or mechanical equipment is electrically powered solely by wet electric storage batteries (including nonspillable batteries) or sodium batteries; or

(5) The vehicle or mechanical equipment is equipped with liquefied petroleum gas or other compressed gas fuel tanks, the tanks are completely emptied of liquefied or compressed gas and the positive pressure in the tank does not exceed 2 bar (29 psig), the line from the fuel tank to the regulator and the regulator itself is drained of all traces of liquefied or compressed gas, and the fuel shut-off valve is closed.

* * * * *

PART 178—SPECIFICATIONS FOR PACKAGINGS

■ 38. The authority citation for part 178 continues to read as follows:

Authority: 49 U.S.C. 5101–5128; 49 CFR 1.81 and 1.97.

■ 39. In § 178.601, paragraphs (l) introductory text, (l)(1), and (l)(2) introductory text are revised to read as follows:

§ 178.601 General requirements.

* * * * *

(l) *Record retention.* Following each design qualification test and each periodic retest on a packaging, a test report must be prepared.

(1) The test report must be maintained at each location where the packaging is manufactured, certified, and a design qualification test or periodic retest is conducted as follows:

Responsible party	Duration
Person manufacturing the packaging	As long as manufactured and two years thereafter.
Person performing design testing	Design test maintained for a single or composite packaging for six years after the test is successfully performed and for a combination packaging or packaging intended for infectious substances for seven years after the test is successfully performed.
Person performing periodic retesting	Performance test maintained for a single or composite packaging for one year after the test is successfully performed and for a combination packaging or packaging intended for infectious substances for two years after the test is successfully performed.

(2) The test report must be made available to a user of a packaging or a representative of the Department upon request. The test report, at a minimum, must contain the following information:

* * * * *

■ 40. In § 178.801, paragraph (l) is revised to read as follows:

§ 178.801 General requirements.

* * * * *

(l) *Record retention.* Following each design qualification test and each periodic retest on an IBC, a test report must be prepared.

(1) The test report must be maintained at each location where the packaging is manufactured, certified, and a design qualification test or periodic retest is conducted as follows:

Responsible party	Duration
Person manufacturing the packaging	As long as manufactured and two years thereafter.
Person performing design testing	Design test maintained for a single or composite packaging for six years after the test is successfully performed and for a combination packaging or packaging intended for infectious substances for seven years after the test is successfully performed.
Person performing periodic retesting	Performance test maintained for a single or composite packaging for one year after the test is successfully performed and for a combination packaging or packaging intended for infectious substances for two years after the test is successfully performed.

(2) The test report must be made available to a user of a packaging or a representative of the Department upon request. The test report, at a minimum, must contain the following information:

(i) Name and address of test facility;

(ii) Name and address of the person certifying the IBC;

(iii) A unique test report identification;

(iv) Date of test report;

(v) Manufacturer of the IBC;

(vi) Description of the IBC design type (e.g., dimensions, materials, closures, thickness, representative service equipment, etc.);

(viii) Maximum IBC capacity;

(ix) Characteristics of test contents;

(x) Test descriptions and results (including drop heights, hydrostatic pressures, tear propagation length, etc.); and

(xi) The signature of the person conducting the test, and name of the person responsible for testing.

■ 41. In § 178.955, paragraph (i) introductory text, (i)(1), and (i)(2) introductory text are revised to read as follows:

§ 178.955 General Requirements.

* * * * *

(i) *Record retention.* Following each design qualification test and each periodic retest on a Large Packaging, a test report must be prepared.

(1) The test report must be maintained at each location where the packaging is manufactured, certified, and a design qualification test or periodic retest is conducted as follows:

Responsible party	Duration
Person manufacturing the packaging	As long as manufactured and two years thereafter.

Responsible party	Duration
Person performing design testing	Design test maintained for a single or composite packaging for six years after the test is successfully performed and for a combination packaging or packaging intended for infectious substances for seven years after the test is successfully performed.
Person performing periodic retesting	Performance test maintained for a single or composite packaging for one year after the test is successfully performed and for a combination packaging or packaging intended for infectious substances for two years after the test is successfully performed.

(2) The test report must be made available to a user of a Large Packaging or a representative of the Department of Transportation upon request. The test report, at a minimum, must contain the following information:

* * * * *

Issued in Washington, DC, on October 17, 2013 under authority delegated in 49 CFR part 1.97.

Cynthia L. Quarterman,

Administrator, Pipeline and Hazardous Materials Safety Administration.

[FR Doc. 2013–24714 Filed 10–30–13; 8:45 am]

BILLING CODE 4910–60–P

FEDERAL REGISTER

Vol. 78 Thursday,

No. 211 October 31, 2013

Part III

Department of Veterans Affairs

38 CFR Parts 3, 19, and 20

Standard Claims and Appeals Forms; Proposed Rule

DEPARTMENT OF VETERANS AFFAIRS

38 CFR Parts 3, 19, and 20

RIN 2900–AO81

Standard Claims and Appeals Forms

AGENCY: Department of Veterans Affairs.

ACTION: Proposed rule.

SUMMARY: The Department of Veterans Affairs (VA) is proposing to amend its adjudication regulations and the appeals regulations and rules of practice of the Board of Veterans' Appeals (Board). There are two major components of these proposed changes. The first is to require all claims to be filed on standard forms prescribed by the Secretary, regardless of the type of claim or posture in which the claim arises. The second is to provide that VA would accept an expression of dissatisfaction or disagreement with an adjudicative determination by the agency of original jurisdiction (AOJ) as a Notice of Disagreement (NOD) only if it is submitted on a standardized form provided by VA for the purpose of appealing the decision, in cases where such a form is provided. The purpose of these amendments is to improve the quality and timeliness of the processing of veterans' claims for benefits.

DATES: Comments must be received by VA on or before December 30, 2013.

ADDRESSES: Written comments may be submitted through *www.regulations.gov;* by mail or hand-delivery to the Director, Regulations Management (02REG), Department of Veterans Affairs, 810 Vermont Avenue NW., Room 1068, Washington, DC 20420; or by fax to (202) 273–9026. (This is not a toll-free number.) Comments should indicate that they are submitted in response to ''RIN 2900–AO81—Standard Claims and Appeals Forms.'' Copies of comments received will be available for public inspection in the Office of Regulation Policy and Management, Room 1063B, between the hours of 8:00 a.m. and 4:30 p.m. Monday through Friday (except holidays). Please call (202) 461–4902 for an appointment. (This is not a toll-free number.) In addition, during the comment period, comments may be viewed online through the Federal Docket Management System (FDMS) at *www.regulations.gov.*

FOR FURTHER INFORMATION CONTACT: Stephanie Caucutt Li, Chief, Regulations Staff (211D), Compensation Service, Department of Veterans Affairs, 810 Vermont Avenue NW., Washington, DC 20420, (202) 461–9700. (This is not a toll-free number.)

SUPPLEMENTARY INFORMATION:

I. Executive Summary

This document proposes to amend 38 CFR parts 3, 19, and 20. The proposed amendments would require the use of standard forms to initiate claims for benefits, and to initiate appeals of AOJ decisions on those claims. VA's forms are available on the following Web site: *http://www.va.gov/vaforms/.*

A. Purpose

VA is proposing to amend its adjudication regulations and the appeals regulations and rules of practice of the Board. There are two major components of these proposed changes. The first is to require all claims to be filed on standard forms prescribed by the Secretary, regardless of the type of claim or posture in which the claim arises. The second is to provide that VA would accept an expression of dissatisfaction or disagreement with an adjudicative determination by AOJ as an NOD only if it is submitted on a standardized form provided by VA for the purpose of appealing the decision, in cases where such a form is provided.

These amendments are necessary to improve the quality and timeliness of the processing of veterans' claims for benefits. These changes are intended to modernize the VA system so that all veterans receive more timely and accurate adjudications of their claims and appeals. VA's goal is to process all claims with 98 percent accuracy within 125 days by 2015. VA is experiencing a significant increase in claims volume in the compensation benefit line, which has consequences for the timeliness of decisions on claims for benefits, and appeals of those decisions. As discussed more fully below, these amendments would improve the efficiency of the claims adjudication and appeals process in order to respond to the increasing volume and complexity of compensation claims.

VA has clear authority to make these regulatory changes. VA is granted broad authority to ''prescribe all rules and regulations which are necessary or appropriate to carry out the laws administered by [VA] and are consistent with those laws,'' including specifically authority to prescribe ''the forms of application by claimants under such laws''. 38 U.S.C. 501(a).

B. Summary of Major Provisions

Regulatory change is necessary to promote the submission of claims and appeals in standard formats that are more easily digitalized and processed than non-standard submissions. When a compensation claim is granted, VA pays a monthly benefit according to the severity of the veteran's disability, beginning from the claim's effective date, which is usually the date the claim was filed. VA's current rules allow a claimant to submit an ''informal'' claim in a non-standard format that not only may be difficult to distinguish from other routine correspondence but may be incomplete for adjudication. While the current rules are meant to minimize the burden associated with initiating a claim, and allow benefits to be paid from the earliest possible date if the claim is ultimately granted, they also unintentionally incentivize the submission of claims in non-standard formats that frustrate timely, accurate, and orderly claims processing. This rule proposes to eliminate the concept of an ''informal'' claim, and replace it with a process that would incentivize the submission of claims in a format more amenable to efficient processing, while still allowing veterans to receive favorable effective date treatment similar to that available under the current ''informal'' claim rule.

In order to achieve the requirement that all claims be filed on a standard form, VA proposes to amend 38 CFR 3.155. Claims filed through an online claims submission tool within a VA Web-based electronic claims application system would be considered filed as of the date of an ''incomplete claim'' if the claim is ultimately completed within 1 year. This would allow the claimant to preserve an effective date, secure any necessary evidence, and submit the claim to VA in a package that facilitates efficient processing. VA proposes to establish rules for assigning effective dates for claims depending on the format in which they are filed. In particular, paper and other claims would be considered filed as of the date a complete claim is filed. VA further proposes to amend 38 CFR 3.160, to clarify what constitutes a complete claim. VA also proposes to remove 38 CFR 3.157, which generally requires VA to deem various documents other than claims forms to constitute claims. However, VA would seek to preserve many of the features of § 3.157 that are favorable to veterans through an amendment to 38 CFR 3.400, providing that medical records which indicate an increase in disability may be the basis for an effective date of increased compensation provided a complete claim for increase is received within 1 year.

Regulatory change is also necessary to improve the quality and timeliness of VA's processing of appeals. By statute, the first step in the VA appellate process is filing an NOD. VA's current rule

allows an NOD to be filed in any format, so long as it contains a statement that can be ''reasonably construed'' as seeking appellate review. As explained more fully below, this standard turns the identification of an appeal into a time-intensive and inefficient interpretive exercise, complicated by the fact that an NOD may be embedded within correspondence addressing a variety of other matters. This contributes to delay and error. Requiring appeals to be initiated on a standard form would reduce errors in identifying appeals and reduce the time AOJ personnel must spend clarifying the scope and nature of the disagreement with VA's initial decision.

Therefore, VA proposes to require that a claimant may initiate an appeal from an adverse decision of the AOJ only by submitting a standard form whenever the AOJ provides a form for that purpose. VA proposes to amend 38 CFR 20.201 to redefine what constitutes an NOD. VA proposes to add a paragraph (a), which would state that VA will accept as an NOD only the form provided by the AOJ for the purpose of initiating an appeal in cases where such a form is provided. In cases where the AOJ provides a form for purposes of initiating an appeal, an NOD would consist of a completed and timely submitted copy of that form. VA also proposes to add a new paragraph (b) to § 20.201, which would retain the current standard for NODs relating to decisions of the AOJ in cases where no such form is provided. This proposed rule is necessary to allow VA to require the use of a standard form and design appeal forms tailored to the specific needs of particular benefit lines rather than a single agency-wide generic form.

VA also proposes to add two new sections to part 19. New § 19.23 would clarify whether the requirements of current 38 CFR 19.26, 19.27, and 19.28, or proposed § 19.24, apply to a case. New § 19.24 would set forth procedures for AOJ processing of NODs governed by proposed § 20.201(a), including procedures governing the treatment of incomplete forms. Additionally, VA proposes to make minor changes to § 3.2600, which discusses review of benefit claims decisions after filing of an NOD, § 20.3(c), which defines ''appellant,'' and § 20.200, which describes what constitutes an appeal. The specific revisions are explained in further detail below.

These changes generally would preclude claimants from initiating claims and appeals through non-standard means. However, VA believes the benefits of these changes would outweigh any burden of that limitation, for three primary reasons. First, requiring the use of standard forms would impose minimal if any burden on claimants because the forms are designed to be simple to use and guide the claimant in providing information necessary to substantiate their claim which would otherwise be required to be provided under current procedures. Second, these proposed changes would allow claimants, through use of VA's electronic applications process, to preserve the same beneficial effective-date treatment they could obtain under current procedures regarding non-standard informal claims. Third, the use of standard forms would enable VA to more quickly process claims and would enhance the efficiency and timeliness of VA's claims processing and benefit delivery system-wide.

This proposed rule would apply only with respect to claims and appeals filed 30 days after the date this rule is published in the **Federal Register** as a final rule. Claims and appeals pending under the current regulations as of that date would continue to be goverened by the current regulations.

II. Background

A. Claims

Claimants must file ''a specific claim in the form prescribed by the Secretary'' in order for VA to pay benefits. 38 U.S.C. 5101(a)(1). VA is required to notify the claimant of any information or evidence necessary to substantiate the claim (hereinafter ''section 5103 notice''). 38 U.S.C. 5103(a)(1). Additionally, VA must make ''reasonable efforts to assist a claimant in obtaining evidence necessary'' to substantiate the claim, to include assistance in obtaining records and providing medical examinations. 38 U.S.C. 5103A. Since there are no limitations or restrictions on the number of claims a claimant may file, one claimant can have multiple claims pending for adjudication. For instance, a claimant may request benefits for one or multiple issues in one claim, and the same claimant may also submit additional claim(s) for one or multiple issues while the previous claim is still pending for adjudication. In such cases, VA generally must then send the claimant a different 5103 notice for those new claims filed and assist by developing evidence for these added claims. The filing of additional claims while a previous claim is still pending significantly lengthens the overall processing and adjudication of all the claims filed, i.e., the previously filed claim as well as the additional claim(s) filed, because additionally filed subsequent claims are associated, processed, and adjudicated with the previously filed pending claim. Thus, VA must gather additional evidence for the subsequently filed claim, thereby extending the time the additional claim is pending, and must identify and adjudicate all the issues or contentions claimed on all filed claims which are ready for a determination, while simultaneously continuing to develop the issues or contentions which are not ready for determination. This process will lengthen the overall adjudication time of all claims filed by one claimant, particularly when multiple issues or contentions are raised for every claim filed.

If VA receives an incomplete application, VA will notify the claimant of the information necessary to complete the application and will defer assistance until the claimant submits this information. 38 CFR 3.159(b)(2). If VA does not receive a complete claim within 1 year of receipt of the incomplete application, VA will not take action on processing or adjudicating the incomplete claim. The date of receipt of the incomplete application or informal claim will be preserved as a date of claim if a completed application is submitted within 1 year of receipt. However, if VA does not receive the completed application or the information or evidence necessary to substantiate the claim within 1 year of submission, the date of receipt of the claim would not be preserved and the claimant would have to submit or resubmit a completed claim, resulting in a different date of claim.

VA receives an enormous volume of non-standard submissions under its current rules. Current 38 CFR 3.155(a) provides that ''[a]ny communication or action, indicating an intent to apply for benefits . . . may be considered an informal claim.'' If a claimant submits an informal claim, and a claim on a form prescribed by the Secretary is not previously of record, VA will furnish the appropriate application, depending upon the particular benefit sought, for completion and notify the claimant that the date VA received the informal claim will be preserved as the date of claim for effective date purposes if the completed application is filed within 1 year of the date it was sent. If a completed application is not received within the 1-year timeframe, VA will not take further action on the informal claim. 38 CFR 3.151, 3.152, 3.155.

Current 38 CFR 3.155(c) provides that if a claim in the form prescribed by the Secretary is already of record, any informal request for increase or

reopening will be accepted as the claim. In other words, claims for an increase in benefits or to reopen a previous claim do not need to be filed on a form prescribed by the Secretary under VA's current rules. These claims make up a majority of VA's compensation workload. As previously discussed, from April 2009 to April 2013, the total number of initial, original compensation and pension claims (excluding death benefits), i.e., claims which may be initiated informally but for which a standard form is eventually required, received nationally was 1,671,810. By comparison, the total number of claims for increase or to reopen a previously denied claim, i.e., claims for which a standard form is not required, received nationally was 3,184,863. Since VA does not record data on specifically the number of informal claims received, the figures capture both informal and formal claims for original compensation and pension claims (excluding death benefits) and increase in benefits and claims to reopen. Claims for an increase in benefits or to reopen a previously denied claim frequently do not specify the benefits sought. Therefore, VA has to determine what benefit the claimant is seeking by contacting the claimant and/or claimant's authorized representative. Where the claimant submits statements in support of his or her pending claim, VA has to determine whether the statements can be construed as informal claims for other benefits unrelated to the pending claim. Reviewing and clarifying these non-standard submissions is extremely time consuming, and can also lead to claims being overlooked and not adjudicated.

B. Appeals

When the AOJ renders a decision affecting the payment of benefits or the granting of relief, it will provide a claimant with notice of the decision and his or her appellate rights. 38 U.S.C. 5104; 38 CFR 3.103(b)(1). Appellate review by the Board of an AOJ decision is initiated by a timely filed NOD. 38 U.S.C. 7105(a). Upon receipt of an NOD, the AOJ is required to ''undertake such development or review action as it deems proper'' in an attempt resolve the claim, either through ''granting the benefit sought or though withdrawal of the [NOD].'' 38 U.S.C. 7105(d)(1). If the disagreement cannot be resolved, an appeal is completed by a timely filed Substantive Appeal after a Statement of the Case (SOC) is furnished. 38 U.S.C. 7105 (a), (d)(1) and (3); 38 CFR 20.200, 20.202. A claimant, or his or her representative, must submit an NOD in writing within 1 year (or 60 days for simultaneously contested claims) from the date of mailing of the notice of the initial adjudicative determination by the AOJ. 38 U.S.C. 7105(b).

Currently, VA will accept ''[a] written communication from a claimant or his or her representative expressing dissatisfaction or disagreement with an adjudicative determination by the [AOJ] and a desire to contest the result'' as an NOD. 38 CFR 20.201. If the AOJ receives a timely filed written communication expressing disagreement, but cannot clearly identify that communication as expressing an intent to appeal, or cannot identify which claims the claimant wants to appeal, the AOJ will contact the claimant orally such as by telephone or in person or in writing to request clarification of his or her intent. *Id.* § 19.26(b). If the claimant is contacted orally or in writing, then he or she must respond to the clarification request within the later of 60 days or the remainder of the 1-year period from the date of mailing of the notice of the AOJ decision. *Id.* § 19.26(c). Both VA's current rule and its predecessor make clear that an NOD can be in any format, so long as it is in writing and can be ''reasonably construed'' as seeking appellate review. *Id.* § 20.201 (''special wording is not required''); *see also* 38 CFR 19.118 (1983).

After a timely NOD is received, the AOJ must undertake any necessary development actions. *Id.* § 19.26(a). If such development does not result in resolving the disagreement in the claimant's favor, then the AOJ must send the claimant an SOC, which provides further information regarding the reasons for the decision and the law and the evidence considered in reaching the decision. 38 U.S.C. 7105(d)(1); 38 CFR 19.29. The claimant has 60 days from the date the SOC is issued or the remainder of the 1-year period from the date of mailing of the notification of the decision being appealed, whichever period ends later, to complete his or her appeal to the Board by filing a Substantive Appeal. 38 U.S.C. 7105(d)(3); 38 CFR 20.302(b).

III. Challenges

VA is facing an unprecedented volume of compensation claims, and is experiencing unacceptable delays at every phase of its process for adjudicating claims and appeals. As of August 24, 2013, the Veterans Benefits Administration (VBA), which processes claims for monetary benefits, had 760,820 compensation and pension claims pending. Four hundred seventy-one thousand, six hundred fifty (471,650) were considered part of the ''backlog,'' meaning they were pending longer than VA's goal of 125 days. This means that 62 percent of the claims inventory was pending longer than VA's operational goal. VA experienced roughly a 46 percent increase in annual claims receipts from 888,000 in fiscal year (FY) 2008, to 1.3 million in FY 2011. VBA has processed over 1 million compensation claims each of the last 3 fiscal years (FY 2010–FY 2012), but the total volume of claims receipts has outpaced production. Additionally, the number of medical conditions contained in each claim has increased, leading to greater complexity for each claim.

Many factors contribute to the backlog by increasing both the volume and complexity of claims. Some factors external to VA include 10 years of war with increased survival rates, post-conflict downsizing of the military, and a difficult economy. Other factors include greatly increased VA outreach, the decision to afford presumptive service-connection to additional conditions for exposure to herbicides, and special evidentiary rules for Post-traumatic Stress Disorder (PTSD).

However, many features of VA's current claims process also contribute to the backlog, or at a minimum hamper VA's ability to address the backlog. Most inputs into the claims process, such as claimant submissions, are still received in paper format. Further, many submissions, including submissions requiring VA to take action, are not received in a standard format. This increases time spent determining whether a claim has been filed, identifying the benefit claimed, sending letters to the claimant and awaiting a response, and requesting and awaiting receipt of evidence. These steps all significantly delay the adjudication and delivery of benefits to veterans and their families. By placing significant burdens on VA, these informal submissions slow down the adjudication for all veterans, including those who do submit complete claims on standardized forms. By requiring the use of standard forms for all claims, VA would be able to more easily identify issues and contentions associated with claims that are filed, resulting in greater accuracy, efficiency, and speed in the processing and adjudication of claims, which benefits both the individual claimant and all veterans who have filed claims.

Similar challenges exist for appeals. While the Board is responsible for issuing VA's final decision on a benefits claim, much of the appellate processing that takes place between an initial AOJ decision and the Board's disposition of an appeal is performed by VBA. Accordingly, this appellate processing is performed by the same pool of resources

that must be used to process initial claims.

In FY 2011, the average length of time between receipt of an NOD at the AOJ and certification of an appeal to the Board was 883 days. Board of Veterans' Appeals, Department of Veterans Affairs, *Report of the Chairman: Fiscal Year 2011,* at 18 (2012). An average of 257 days of this period resulted from the time elapsed between the date of receipt of the NOD and the date of the AOJ's issuance of an SOC. *Id.* Similarly, in FY 2012, the average appellate processing time at the AOJ from receipt of an NOD to certification of an appeal to the Board was 1,002 days, with 270 days of that period elapsing between receipt of the NOD and issuance of the SOC. Board of Veterans' Appeals, Department of Veterans Affairs, *Report of the Chairman: Fiscal Year 2012,* at 19 (2013).

VA is aggressively pursuing a comprehensive transformation in order to respond to these challenges. VBA must use its limited resources as efficiently as possible, striking the optimal balance between resolution of initial claims and timely appeals processing. To be successful, any effort to quicken processing must assume ongoing workload challenges relative to VA's operating resources, and therefore focus on process improvements and efficiency gains. However, VA must also ensure that efforts to make the process more efficient do not also unduly erode the longstanding informal, non-adversarial, pro-claimant nature of the VA system. *See Walters* v. *Nat'l Ass'n of Radiation Survivors,* 473 U.S. 305, 323–24 (1985).

This proposed rule aims to strike an appropriate balance between these interests by increasing the role of standard forms. Use of standard forms greatly facilitates efficient and accurate claims processing. A VBA adjudicator can more readily identify the benefits sought and contentions that are relevant to the claim when inputs are received in a predictable, regularly occurring way rather than in an open-ended narrative format. Further, even if a claimant prefers to interact with VA through paper, submissions received in a standard format can be much more easily scanned and turned into data for purposes of processing a claim within VA's own business applications. In this way, this proposed rule would apply some of the efficiencies previously only enjoyed by particular subsets of claims, such as fully developed claims (FDCs), to the entire claims system. The intent of this proposed rule is to streamline and modernize the VBA claims and appeals process in order to expedite and maximize the delivery of benefits to veterans and their families.

IV. Modernized Claims Process

VBA has implemented a series of initiatives in eliminating the backlog of claims and has deployed technology solutions to end its reliance on the outmoded paper-intensive processes that thwart timely and accurate claims processing. These solutions consist of several Web-based paperless claims systems. eBenefits is an online benefits account that veterans and their families can use to apply for and manage their VA benefits. Claimants can fill out and submit a fully paperless claim online. The Stakeholder Enterprise Portal (SEP) allows Veterans Service Organizations (VSO) to assist claimants in completing a claim through eBenefits. The Veterans Benefits Management System (VBMS) is an internal VA business application for electronic claims processing, which facilitates streamlined development of electronic claims. VBMS facilitates the evidence-gathering phase of the claims process, and employs evaluation and rules-based decision-support tools to increase the speed and accuracy of rating decisions.

When a claimant files a claim electronically through eBenefits, he or she is guided through a series of interview-style questions that are taken directly from the questions found in VA Form 21–526EZ, *Application for Disability Compensation and Related Compensation Benefits.* eBenefits' interview-style process prompts the claimant to provide pertinent data such as non-evidentiary facts that will be necessary to develop the claim. eBenefits also prompts the claimant to identify the benefits sought. The claimant can select responses to the questions and enter a selection from a list of disabilities provided and can also manually enter disabilities related to the claimed benefit. eBenefits then automatically populates all of the claimant's responses into VA Form 21–526EZ and provides claimant with section 5103 notice for every type of benefit identified in the electronic claims process. The claimant also has the option of uploading evidence into the program by scanning in paper evidence or attaching electronic documents with the application. Once the electronic form is completed, the claimant can file the claim by electronically transmitting the claim with a press of a button. VA will receive the electronic claim within 1 hour.

Since eBenefits provides step-by-step guidance in filling out the online form, it may ease the claimant's burden in filling out the application and provide a more convenient method of submitting the claim, as the claimant does not have to apply at the VA regional office. The Web-based electronic claims processing system also ensures more accurate responses from the claimant as well as a more consistently completed form. The nature and format of the interview in eBenefits prompts claimants to answer all pertinent questions in order to obtain information necessary to substantiate the claim, checks for errors and missing information, and readdresses any unanswered questions, of all which ensure more accurate claims processing and adjudication, resulting in expedited delivery of benefits to claimants.

Apart from the specific advantages of eBenefits, a paperless system is superior to a paper-bound system for many reasons. First, a paper claims file can only be in a single place at once, making it far more difficult to route different medical issues to specialists around the country for consideration. Electronic claims can be separated by issue and brokered for simultaneous, rather than sequential, consideration by various centers of excellence specializing in specific types of medical issue around the country. Second, paper claims files can be lost, damaged, or destroyed. These risks are far lower for electronic files. Third, paper files must be searched and reviewed page-by-page. This is a significant limitation because many of the claims files handled by VA are of considerable size. An AOJ adjudicator looking for a particular contention or piece of evidence must literally thumb through thousands of pages in each file. For electronic files, robust optical character recognition capabilities make it possible to search thousands of pages in a fraction of the time required to search paper files. Fourth, paper files are heavy and take up enormous amounts of physical space, creating a challenging work environment for AOJ personnel. One of VA's RO's required structural improvements in order to accommodate the sheer weight of paper files. Finally, even if VA's own business processes are fully paperless, paper submissions must be manually scanned into VBMS, adding an extra time-intensive step for paper submissions. A piece of mail must be identified, sorted, sent to a scanning facility, and meta-data must be entered. The nationwide average delay between when a piece of mail is received, and when it can actually be processed by an AOJ adjudicator using VBMS, is 22.6 days. This delay does not exist for submissions that are initially received in an electronic format.

V. Changes to Claims Rules Can Drive Modernization

VA has determined that changes to its rules governing claims are necessary in order to facilitate a transition to a modernized, more efficient process that is less reliant on paper. In order to incentivize the submission of claims in a standard format for more effective and efficient claims processing, VA proposes to replace the terminology ''informal claim'' with ''incomplete claim'' and ''complete claim'' and establish effective date treatment of incomplete claims based on the format used in submission. Generally, a ''complete claim'' would be a form prescribed by the Secretary for the purposes of initiating a claim that is fully filled out, to include identifying the benefits sought. An ''incomplete claim'' would generally be a written communication expressing a desire for benefits that falls short of the standards for a complete claim, similar to the current standard for an ''informal claim.''

VA has authority to replace the current ''informal claim'' concept with a different process. No statute envisions or requires VA's current ''informal claims'' rule—it is entirely a feature of VA's regulations. Accordingly, VA has authority to alter the contours of the rule to produce a claims processing system that is better suited to veterans' current needs.

VA is required to furnish all instructions and forms necessary to apply for a benefit upon request made by any person claiming or applying for, or expressing an intent to claim or apply for, a benefit. 38 U.S.C. 5102(a). While VA will continue to furnish the appropriate forms to claimants, a submission on a prescribed paper form that is not complete, paper statements or electronic mail, whether submitted through eBenefits or otherwise, indicating a desire for benefits would not be considered a claim of any kind, and would not be the basis for an effective date prior to the date of the complete claim. However, claimants who file an incomplete electronic claim within eBenefits would receive up to 1 year to complete the claim.

For purposes of clarification, we would like to explain some terms used in describing the electronic claims process. VA considers an act of ''submitting'' to encompass the process of entering into the eBenefits system, filling out the online application through the series of interview questions, and electronically saving the application. If the claimant saves the online application, whether completely filled out or not, and does not transmit the online application for processing, the application will be saved and stored in eBenefits for 1 year. These electronically stored, non-transmitted online application(s) are considered ''incomplete'' electronic claims. When the claimant transmits the online application for processing and adjudication, VA considers this act of transmitting the application as the final step in ''filing'' the electronic claim.

If a claimant files a completed electronic claim within 1 year of the initial submission of an incomplete electronic claim, the completed claim will be considered filed as of the date the incomplete electronic claim was electronically saved or stored in eBenefits for effective date purposes. The date the completed claim is transmitted would start the toll on the ''age'' of the electronic claim. We anticipate that claims filed through VA's Web-based electronic claims processing system would be processed and adjudicated more expeditiously and efficiently than in the paper-based claims processing and would not contribute to the claims backlog as much as the traditional paper-based processing system.

This electronic claims process aligns claimant incentives with the interests of efficient and effective claims processing. A claimant receives the fastest possible grant of benefits if a claimant submits all evidence the claimant is able to procure in a complete package that facilitates efficient processing. However, claimants understandably are often reluctant to wait until all evidence is assembled before submitting a claim, since it is the submission of the claim which generally establishes the effective date of an award of benefits.[1] *See* 38 U.S.C. 5110(a). This proposed rule would allow claimants to establish an effective date ''placeholder'' in VA's electronic systems, procure all necessary evidence, and submit everything in a single completed claim. When claimants submit claims and evidence in this way, the time VA must spend to clarify, develop, and decide the claim are all minimized. In order to incentivize electronic submissions over paper submissions, VA proposes to make this effective date ''placeholder'' possible only for electronic incomplete claims. Further, identifying incomplete claims in VA's eBenefits system is much simpler than the cumbersome task of identifying informal paper claims. Accordingly, this proposed rule would preserve the beneficial effective-date feature of the current informal claim rule but, by tying that feature to the electronic claims process, would reduce the burdens, uncertainty, and delay associated with the current paper claim process.

We note that standard forms such as the 21–526EZ contain section 5103 notice. Similarly, eBenefits provides the section 5103 notice to claimants as part of the submission process. Increased use of the electronic claims process and standard forms such as the 526EZ therefore implies that more claimants will receive their section 5103 notice some way other than in a separate notice letter.

In Public Law 112–154, Congress made clear that VA is authorized to provide section 5103 notice to claimants through the use of standard forms. VA believes Congress' intent was to make the section 5103 notice process less sequential in order to expedite the processing of claims. Congress deleted ''[u]pon receipt of a complete or substantially complete application'' from the first sentence of 38 U.S.C. 5103. The first sentence of that section now reads, ''[t]he Secretary shall provide to the claimant and the claimant's representative, if any, by the most effective means available, including electronic communication or notification in writing, notice of any information, and any medical or lay evidence not previously provided to the Secretary that is necessary to substantiate the claim.'' VA interprets this statutory change as clear authority to satisfy notice requirements in the most efficient way possible, without altering the important substantive role that notice plays in the claims process.

A House Committee Report discussing proposed bill language that was ultimately incorporated in Public Law 112–154 makes clear that VA's interpretation is consistent with Congress' intent in amending section 5103. Congress recognized the crucial role that Veterans Claims Assistance Act (VCAA) notice plays in the claims process, but also noted ''unintended consequences, including court interpretations, of VCAA that have resulted in delays in claims processing . . . the Committee believes that sensible modifications can be made to VCAA without undoing the intent of VCAA, while also expediting the claims process.'' H.R. Rep. 112–241 at 9. Clearly the intent of the statutory change was to ''remove the requirement that the VCAA notice be sent only after receipt of a claim,'' and the framers of this legislation explicitly envisioned that VA would implement these

[1] There are certain exceptions to this rule such as claims received within 1-year of discharge from service. Generally, the date of receipt of claim establishes the effective date of an award.

statutory changes by putting notice on ''new claims forms, as is currently done with the Department's 526–EZ form for Fully Developed Claims (FDC).'' *Id.*

While notice on claims forms would necessarily result in notice relating generally to the type of benefit claim being submitted rather than notice concerning specific circumstances of the individual claimant, such notice is all section 5103 requires. *Wilson* v. *Mansfield,* 506 F.3d 1055, 1059–60 (Fed. Cir. 2007). Nothing in Public Law 112–154 alters this conclusion. The decision by the United States Court of Appeals for the Federal Circuit in *Wilson* was based on the statutory language requiring that VA provide notice ''of any information, and any medical or lay evidence, not previously provided to the Secretary that is necessary to substantiate the claim.'' 38 U.S.C. 5103 (2012). This operative language has not been amended.

To the extent there is any inconsistency between VA's current notice and assistance rules and the current statute as amended by Public Law 112–154, the statute clearly governs. VA is examining whether 38 CFR 3.159 should be amended to account for the new statute, but believes the statute is clear authority for the changes affecting how VA provides notice that we propose here.

VI. Mechanics—Proposed Changes to Part 3, Subpart A

We propose the following changes to 38 CFR part 3, subpart A in order to execute this modernization of VA's claims process.

In proposed § 3.1(p), we would define ''Claim'' to mean ''a written communication requesting a determination of entitlement or evidencing a belief in entitlement, to a specific benefit under the laws administered by the Department of Veterans Affairs.'' This definition would replace the current definition of ''Claim—Application'' which is defined as ''a formal or informal communication in writing requesting a determination of entitlement or evidencing a belief in entitlement, to a benefit'' in current paragraph (p). The current definition is confusing and does not make clear the difference between a ''claim'' and an ''application.'' Therefore, we would clarify the current definition by eliminating the words ''Application,'' ''formal,'' and ''informal'' in our proposed definition in order to conform with the proposed amendments to the adjudication regulations.

Currently, VA does not require that claims for entitlement under 38 U.S.C. 1151, which provides disability compensation and death benefits for a qualifying disability or death of a veteran from VA treatment, examination, or vocational rehabilitation, be submitted or filed on a standard form or application. 38 U.S.C. 1151 (2006); 38 CFR 3.150(c), 3.154, 3.361. Since we are amending VA's adjudication regulations to require that all claims be filed on standard forms prescribed by the Secretary, we propose to revise § 3.150 by removing paragraph (c), which provides that when disability or death is due to VA hospital treatment, training, medical or surgical treatment, or examination, a specific application for benefits will not be initiated. We also propose revising § 3.154, which provides that ''VA may accept as a claim for benefits under 38 U.S.C. 1151 . . . any communication in writing indicating an intent to file a claim for disability compensation or dependency and indemnity compensation,'' to require claimants to file or submit a complete paper or electronic claim in order to apply for benefits under 38 U.S.C. 1151 and § 3.361, the regulation governing the criteria of entitlement to 38 U.S.C. 1151 benefits. 38 U.S.C. 1151; 38 CFR 3.150 and 3.154.

VA's intent is to modernize the claims processing system by standardizing the format in which all disability claims would be received. In order for AOJ personnel to readily identify claims and process them efficiently, it is imperative that all claims appear in easily identifiable formats, using a standardized form. Claims explicitly encouraged to be submitted in non-standard ways are inconsistent with that model and would undermine the predictability that will make standardization successful. Accordingly, VA proposes to require that even claims based on disability or death due to VA hospital care, medical or surgical treatment, examination, training and rehabilitation services or compensated work therapy program under be initiated by completing and filing a standard form. VA believes that using a standard form is a minimal burden to place on claimants, even those who may be due compensation as a result of VA's own errors in providing medical treatment.

In proposed § 3.155, we would replace the current concept of ''informal claims'' with the modernized process we describe in parts IV and V of this notice.

In this rule, we propose to establish claims and effective date rules that would govern the VA system after this proposed rule becomes final. We would clarify that this process would apply to all claims governed by part 3 of title 38 in the Code of Federal Regulations.

In paragraph (a), we propose to make clear that a complete non-electronic claim is considered filed as of the date it was received by VA. Paper or other communications, including electronic communications received outside a claims submission tool within a VA Web-based electronic claims application system that fall short of the standards of a complete claim would not constitute claims of any kind, incomplete or otherwise, and could not be the basis of an effective date prior to the date the complete claim was submitted. Accordingly, there is no ''incomplete claim'' standard that is applicable to this paragraph. We propose to make clear, in conjunction with proposed § 3.160(a), that this rule applies regardless of the reason a given submission falls short of the standards of a complete claim, i.e., whether because it is received in a non-standard format, or because the form prescribed by the Secretary is not fully filled out, i.e., lacks sufficient information for VA to adjudicate the claim.

In paragraph (b), we propose to create a standard for incomplete claims that affords the possibility of favorable effective date treatment. Any communication submitted through or action taking place in a claims submission tool within a VA Web-based electronic claims application system that indicates an intent to apply for one or more benefits administered by VA that does not meet the standards of a complete claim may be considered an incomplete claim. If a complete electronic claim is filed within 1 year of the submission of the incomplete electronic claim, the electronic claim would be considered filed as of the date of submission of the incomplete electronic claim.

The limitation that the communication must take place within an online benefits account is necessary to prevent open-ended narrative format submissions, such as unsolicited emails, from constituting incomplete claims. The further limitation that the communication must be submitted through a claims submission tool within VA's Web-based electronic application system is to ensure that non-standard communications, such as emails within the eBenefits system, do not constitute incomplete claims merely because they took place within eBenefits. VA must be careful to define incomplete claims in a way that channels claimant submissions through a predictable, standardized process.

In proposed paragraph (c), we would specify that certain communications or

actions do not constitute claims of any kind, and are considered a request for an application for benefits under 38 CFR 3.150(a). We would clarify this rule with greater particularity in the three scenarios where we expect this issue to arise. We would place the three scenarios in paragraphs (c)(1) through (c)(3). Paragraph (c)(1) references non-standardized communications or actions, paragraph (c)(2) references a form prescribed by the Secretary that is not complete, and paragraph (c)(3) references an email sent to VA, whether to a general mailbox or through VA's electronic benefits portal. By using the phrase ''without limitation'' we would make clear that paragraphs (c)(1) through (c)(3) are explanations of how the general rule enunciated in the main text of paragraphs (a) and (b) applies in certain scenarios. A communication or action governed by paragraph (a) or (b) that does not perfectly mirror one of the scenarios addressed in paragraphs (c)(1) through (c)(3), but still falls short of the standards of a complete claim, would not be the basis for an effective date prior to the date the complete claim was submitted, unless it meets the requirements for processing under paragraph (b).

Most incomplete electronic claims will likely be incomplete on purpose, in order to serve as effective date ''placeholders'' until all evidence is gathered. However, VA acknowledges the possibility that a claimant would submit the claim believing it to be complete, but VA would later determine the claim is incomplete. In this situation, VA will tell the claimant what information is necessary to complete the claim as required by 38 U.S.C. 5102.

We also propose to make clear that only one complete electronic claim may be associated with each incomplete electronic claim for purposes of this special effective date rule. In other words, if a claimant files one incomplete electronic claim, and then files two or more successive complete electronic claims within 1 year, only issues contained within the first complete electronic claim would relate back to the incomplete electronic claim for effective date purposes. For example, if VA receives an incomplete claim on January 1, 2014, and then receives two successive complete claims on August 1, 2014, and on November 1, 2014, VA would assign an effective date of January 1, 2014, i.e., the date the incomplete claim was received, for the issues contained within the first complete claim received on August 1, 2014. For the issues contained in the complete claim received on November 1, 2014, VA would assign an effective date of November 1, 2014, the date the second complete claim was filed or received by the VA. However, there would be no limit on the number of issues or conditions that could be contained in each complete claim. Accordingly, it would be in claimants' best interest to claim all potential issues in one comprehensive package.

VA believes this proposed rule is less apt to cause confusion than the alternative, which would allow claimants to submit several claims over the course of a year while still relating back to the earliest effective date. This alternative rule would encourage fragmented presentation of claims, which may complicate and delay the development and disposition of already pending claims by causing duplicative VA processing actions or creating confusion regarding the development actions that must be taken for each claim.

Although claimants may submit new claims at any time, it is far more efficient to submit all issues in a single unified claim. In proposed § 3.160, we would define certain types of claims in a way that is meant to complement the structure we would create in proposed § 3.155.

In proposed § 3.160(a), we would define a complete claim as ''[a] submission on a paper or electronic form prescribed by the Secretary that is fully filled out and provides all requested information.'' In paragraphs (a)(1) through (a)(4), we would then enumerate certain requirements that we view as embedded within this general rule. In paragraph (a)(1), we would make clear that a complete claim must be signed whether electronically or manually by the claimant or a person legally authorized to sign for the claimant. In paragraph (a)(2), we would make clear that a complete claim must identify the benefit sought.

In paragraph (a)(3), we would clarify that for compensation claims, a description of symptoms and specific medical conditions on which the benefit is to be based must be provided to whatever extent the form prescribed by the Secretary so requires, or else the form may not be considered complete. Similarly, in paragraph (a)(4), we would clarify that for nonservice-connected disability or death pension and parents' dependency and indemnity compensation claims, a statement of income must be provided to the extent the form prescribed by the Secretary so requires in order for the claim to be considered complete. Our intent is to make as clear as possible that information solicited by a form prescribed by the Secretary must be provided, and incomplete forms do not constitute claims. However, it is not VA's intent to reject forms for minor ministerial or formalistic deficiencies. A form prescribed by the Secretary would only be deemed incomplete if it is missing information necessary to the efficient, fair, and orderly adjudication of the claim.

In proposed paragraph (b), we would refer back to proposed § 3.155 for the definition of an incomplete claim, since the contours of what constitutes an incomplete claim would vary according to paper or electronic format as already discussed.

In proposed paragraph (c), we would define an original claim as the initial complete claim for one or more benefits on a form prescribed by the Secretary, and make clear that all subsequent claims are new and supplemental claims, which we would define in paragraph (d). In proposed paragraph (d), we would identify certain kinds of claims which constitute new and supplemental claims. These paragraphs are not meant to affect the substantive entitlement to the benefits discussed. However, paragraphs (c) and (d), together with operation of proposed § 3.155, would make clear that claims for these benefits must be initiated on standard forms.

In proposed paragraph (e), we would update the existing definition of ''pending claim,'' which is currently defined as ''an application, formal or informal, which has not been finally adjudicated'' by replacing the phrase ''an application, formal or informal'' with the word ''claim.'' In proposed paragraph (f), we would update the existing definition of ''finally adjudicated claim,'' currently defined as ''an application, formal or informal, which has been allowed or disallowed . . .'' by replacing the phrase ''an application, formal or informal'' with the word ''claim.'' Since VA proposes to eliminate the term ''informal claim,'' we would remove references to the phrase or words, ''informal'' and ''formal'' for consistency in the existing definitions to reflect the proposed change to eliminate ''informal claims.'' These subsections are not meant to alter the law of finality in the VA benefits system. *See Cook* v. *Principi,* 318 F.3d 1334, 1339–41 (Fed. Cir. 2002) (*en banc*).

In proposed paragraph (g), we would continue the definition of ''reopened claim'' that appears in current § 3.160(e) with slight modifications to insert ''new and material evidence'' as clarification of VA's existing criteria for reopening a previously denied claim.

In proposed paragraph (h), we would explain that a claim for an increase in

currently awarded benefits may consist of a claim for an increased evaluation for a specific disability, or an increase in benefits based on supplemental benefits such as aid and attendance, housebound, special monthly compensation, and certain special allowances. Also within this category are claims for increased ratings based on total disability based on individual unemployability (TDIU), unless that contention is being made in an original claim. It is VA's intent that a request for an increase accompanied by evidence of unemployability continue to constitute a claim for TDIU, but the claim for increase itself must be filed on a standard form. VA believes this would simplify and clarify the processing of TDIU claims, without affecting the substantive law governing TDIU. A request for resumption of payments previously discontinued would also be considered a claim for increase and accordingly would have to be filed on a standard form.

We propose to remove current § 3.157, which generally provides that reports of examination or hospitalization can constitute informal claims, including claims to increase or reopen. In implementing one consistent standard for the claims process, we propose to eliminate informal claims for increase or to reopen based on receipt of VA treatment, examination, or hospitalization reports, private physician medical reports, or state, county, municipal, or other government medical facilities to establish a retroactive effective date as provided in current §§ 3.155(c) and 3.157. The idea that certain records or statements themselves constitute constructive claims is simply inconsistent with the standardization and efficiency VA intends to accomplish with this proposed rule.

However, VA fully appreciates that while a veteran is hospitalized or receiving crucial medical treatment, a veteran may be more focused on his or her health than on pursuing a claim for compensation. VA has no desire to preclude veterans from receiving benefits for periods of hospitalization or medical treatment—VA only wishes to receive inputs in a standard format in order to serve veterans as efficiently as possible.

Therefore, in place of current §§ 3.155 (c) and 3.157, VA proposes to amend § 3.400(o)(2) to explain that a retroactive effective date may be granted, when warranted by the facts found, based on date of treatment, examination, or hospitalization from any medical facility, if the claimant files a complete claim for increase within 1 year of such medical care. The proposed amendment preserves the favorable substantive features of the current treatment of reports of examination or hospitalization under § 3.157, but requires claimants to file a complete claim for increase within 1 year after medical care was received.

Current § 3.400(o)(2) provides that the effective date of an increase in disability compensation will be the earliest date on which it is factually ascertainable that an increase in disability had occurred if a claim is received within 1 year from such date. Otherwise, the increase will be effective as of the date of receipt of the claim. The proposed amendment would make clear that medical records from any source, indicating an increase in disability, may provide a basis for such retroactive effective date if a complete claim is received within 1 year of the date of the medical treatment, examination, or hospitalization.

Finally, we propose minor amendments to § 3.812 governing a special allowance under Public Law 97–377. We would replace the terminology ''formal'' and ''informal'' claims with ''complete'' and ''incomplete'' claims, as appropriate, to ensure consistency with the rest of the proposed rule.

VII. Appeals: Working Group and Houston Pilot

In October 2011, recognizing that VA needed to decrease appellate processing times to ensure that claimants receive more timely decisions on their appeals, VA created an intradepartmental working group to address the overall timeliness and quality of appellate processing.

After analyzing VA's appellate process, the working group determined that different changes would be needed to address different phases of the VA appellate process. One of the periods addressed was the time it takes the AOJ to issue an SOC after receipt of an NOD. The working group identified two factors within VA's control that affect this time period: (1) The NOD control time, which is how long it takes AOJ staff to identify a document submitted by a claimant or representative as an NOD and route it to the appropriate personnel for processing, and (2) the time it takes the AOJ to understand and clarify the nature of the veteran's disagreement.

The working group found that lengthy control times are in large part the result of the non-standardized way in which NODs are submitted. VA's practice of requiring only that an NOD be ''in terms which can be reasonably construed as disagreement . . . and a desire for appellate review,'' 38 CFR 20.201, has led to substantial variation in the statements that claimants submit to express disagreement with an AOJ's initial adjudication or an intent to appeal. AOJ personnel are required to read through the enormous volume of documents that VA receives from claimants every day in order to determine whether a statement embedded in any of these documents may ''be reasonably construed'' as constituting an NOD. Therefore, the working group recognized that even identifying a given document as an NOD, or potentially containing a statement that might constitute an NOD, is a time-consuming process, lacking clear standards. Moreover, where a claimant expresses his or her disagreement with an AOJ decision, the claimant may not clearly identify the issue or issues with which he or she disagrees. As a result, AOJ personnel have to delay processing of the submission in order to contact the claimant orally or in writing to clarify his or her intent. *Id.* § 19.26(b). The working group concluded that this situation causes delay and error as AOJ personnel may have difficulty identifying issues in ambiguous communication or incomplete NODs buried within correspondence, i.e., not on a standard form.

Errors in identifying NODs can complicate otherwise straightforward claims. If AOJ personnel do not identify an NOD upon receipt, they will not route the document and claims file to the correct adjudicatory personnel to begin the appeal process. Thus, the document may not be identified as an NOD until a much later time, such as when an appeal of another issue reaches the Board and a Veterans Law Judge (VLJ) concludes that a document is an NOD and remands the case to the AOJ for issuance of an SOC. 38 CFR 19.9(c); *see Manlincon* v. *West,* 12 Vet. App. 238, 240 (1999) (holding that the proper remedy when the Board finds that a timely NOD was filed, but an SOC was not issued, is for the Board to remand the case to the AOJ to issue an SOC). In FY 2011, the Board remanded 2,582 issues to the AOJ because the Board identified a timely filed NOD where the AOJ had not issued an SOC. Similarly, in FY 2012, the Board remanded 3,008 issues for the same reason. These statistics demonstrate that NODs are often not being identified by AOJ personnel, a problem that can be traced to the broad and unclear requirements of current § 20.201. When NODs are not initially identified as such, the length of the appellate process could extend for

years if it is the Board that initially identifies a document as an NOD. In June 2012, the Houston Regional Office (RO) took an average of 456 days to issue an SOC after receipt of an NOD in a traditional format. This statistic takes into account the number of cases that were remanded by the Board for issuance of an SOC pursuant to § 19.9(c) and was undoubtedly lengthened significantly by the presence of these cases.

The working group concluded that creating a standardized form that claimants could submit as an NOD would make NODs easier for AOJ personnel to identify, thus helping to decrease the NOD control time, including the processing time necessary to clarify whether a document is an NOD under § 19.26. The working group also concluded that a standardized form would have the added advantage of providing a minimal identification of the issue regarding which the veteran seeks appellate review, enabling AOJ personnel to more rapidly identify and conduct any needed development before either granting the benefit sought or issuing an SOC.

Based on the working group's analysis, in March 2012, VA began a pilot program at the Houston RO to test the use of standard NOD forms. Pursuant to this program, when the RO sent out an initial decision, it included a standard NOD form with the notification letter, providing the claimant with the option of submitting the completed form if he or she disagreed with the decision. The form provided the claimant with the opportunity to specify the issues he or she was contesting and to identify the relief he or she was seeking. From the inception of this program, VA saw a significant decrease in the NOD control time for appeals initiated using the standard NOD form. For example, from March 1, 2012 to January 31, 2013, the Houston RO's control time for a standard NOD was approximately 7 days. In contrast, from March 1, 2012 to January 31, 2013, this RO's control time for pending NODs submitted in a traditional format averaged 88 days. These statistics show a markedly decreased control time at the Houston RO of approximately 81 days averaging from March 1, 2012 to January 31, 2013. This analysis shows that by using the standard form for initiating an appeal, VA can process appeals more expeditiously, as requiring specificity concerning the appellant's contentions avoids confusion and the need to seek clarification from the appellant. By requiring the use of a standard NOD form, individual claimants as well as all appellants in the appeals process would benefit from shortened processing time and from increased accuracy in identifying contentions claimed.

The working group also proposed other process and workflow improvements that were tested during the pilot. However, only the standardized NOD was designed to directly address NOD control time. VA believes that the dramatic improvements in control time discussed above are primarily due to the use of standardized NODs. Standardized NODs are also designed to work in conjunction with the working group's other suggested workflow improvements that do not themselves require regulatory change.

Use of the standardized NOD enables AOJ personnel to more quickly conduct targeted development and consideration of a veteran's appeal. The clarity provided by standardized inputs can be expected to speed all phases of the appellate process. However, even assuming the standardized form only improves the early stages of the appellate process, VA believes that this is clearly a sufficient basis to mandate the use of a standard form for an NOD. Requiring claimants to submit their initial disagreement with an adjudicative determination of the AOJ on a standard form would clarify what actions claimants need to take to initiate an appeal of an AOJ determination. This in turn would improve VA's ability to identify NODs when they are received and would eliminate the need to contact claimants to clarify whether they intended to submit an NOD. This would help speed up the early steps of the appellate process, which can also prevent prolonged delays and speed up completion of the entire appeal. Additionally, requiring submission of a standard NOD form would promote more uniform treatment of NODs across all AOJ offices. VA believes the quality of the decisions made in appeals would also improve since the claimant would be able to clearly identify on the form the issues with which he or she disagrees.

VIII. Mandatory Standard NOD Forms

VA, therefore, proposes to make the filing of a standard VA form the only way to submit an NOD in cases where the AOJ provides a form to the claimant for the purpose of initiating an appeal. VA fully appreciates that this proposal alters the current practice of accepting almost any statement of disagreement with an AOJ decision as an NOD. However, VA believes this step would be highly beneficial to veterans in light of lengthening appellate processing times, the dramatic increase in volume and complexity of compensation claims being received by VA, and the demonstrated improvement in appellate workflow in pilot testing of the standardized NOD.

Mandating a standard form, rather than simply encouraging its use, is necessary to ensure the efficiency gains that standard forms make possible will be realized. The pilot program at the Houston RO has demonstrated that when provided with the option of submitting a standard NOD form, a substantial number of claimants choose to submit an NOD in another format. For example, in May 2012, approximately 52 percent of the 479 NODs received at the Houston RO were submitted in a format other than the standard form, while in August 2012, approximately 40 percent of the 590 NODs submitted were filed in a format other than the standard form. Given these statistics, VA believes that continuing to allow the submission of NODs in any form a claimant chooses would not maximize the desired result of decreasing appellate processing time for all claimants.

Further, if VA does not make the form mandatory, its positive impact would be greatly diluted even if veterans and their representatives made use of the form in the majority of appeals of AOJ decisions. If VA continues to accept NODs in any format, AOJ personnel would still be required to scour all claimant submissions and engage in the time-intensive interpretive exercise of determining whether a given document could ''be reasonably construed'' as an NOD. Rather than having certainty that a communication must be on a standard form, in order to constitute an NOD, AOJ personnel would thus still have to engage in much of the time-consuming clarification required by the current rule.

Governing statutes permit VA to require that a claimant submit an NOD on a particular form. The applicable statutes require only that an NOD must be in writing and filed by the claimant or his or her representative with the VA activity that rendered the determination. 38 U.S.C. 7105. Congress has specifically authorized VA to issue rules concerning ''the forms of application,'' 38 U.S.C. 501(a)(2), and has characterized a request for Board review as an ''[a]pplication for review on appeal.'' 38 U.S.C. 7106, 7108. The United States Court of Appeals for the Federal Circuit has recognized that the term ''notice of disagreement'' does not have a complete and unambiguous meaning in the statute. *Gallegos* v. *Principi,* 283 F.3d 1309, 1313 (Fed. Cir. 2002). The statute does not define

''notice of disagreement'' or ''suggest sufficient expressions to make a writing an NOD.'' *Id.* VA interprets the lack of detail in section 7105 regarding the requirements for an NOD, combined with the Secretary's clear authority in 38 U.S.C. 501(a) to promulgate ''all rules and regulations which are necessary or appropriate to carry out the laws administered by [VA],'' to represent a sufficient delegation of authority to VA to require that NODs be filed on a standardized form. Accordingly, specifying the form of such applications is within VA's specific delegated rule-making authority.

IX. Mechanics—Appeals

Based on the foregoing, VA proposes to revise § 20.201 to incorporate a standardized NOD requirement. In new paragraph (a), VA proposes to outline the requirements for appeals relating to cases in which the AOJ provides a standard form for the purpose of initiating an appeal. In paragraph (a)(1), entitled ''Format,'' VA proposes to state that, for every case in which the AOJ provides, in connection with its decision, a form identified as being for the purpose of initiating an appeal, an NOD would consist of a completed and timely submitted copy of that form. VA would not accept as an NOD any other submission expressing disagreement with an adjudicative determination by the AOJ.

VA has chosen a flexible standard rather than identifying a particular form number or control number in the rule text in order to ensure the rule functions for all of VA's diverse operations. The standard for what constitutes an NOD applies to all VBA benefit lines, as well as the rest of VA. The form that VBA tested during the Houston RO pilot was designed for compensation claims. One of the key features of the form's design was that it solicited particular pieces of information relevant to a compensation claim. Requiring appeals of other benefits, such as home loan guaranty or education benefits, to be submitted using this form would likely be confusing to veterans. At the same time, the overwhelming majority of the VA appellate workload concerns appeals of AOJ decisions on claims for compensation. Board of Veterans' Appeals, Department of Veterans Affairs, *Report of the Chairman: Fiscal Year 2012,* at 22 (2013) (96.1 percent of Board dispositions in FY 2012 were for compensation claims). VA is concerned that making the NOD form so generic as to accommodate appeals of all benefits VA-wide would dilute much of the efficiency gain VA expects from mandating the use of standardized forms, and in particular the immediate efficiencies that might be realized in the compensation claims and appellate workload.

Accordingly, the standard reflected in proposed § 20.201(a)(1) was designed to produce a single rule that can function flexibly VA-wide while allowing for the creation of forms that are functional for each VA benefits line. Additionally, § 20.201(b) provides a ''fallback'' standard for benefits where standardized appellate processing is not as pressing a need as it is with compensation claims. This approach allows for standard forms in VA benefits lines where the volume, complexity, and frequency of appeal call for standardization, without disrupting the administration of other benefits that are infrequently appealed. Under proposed § 20.201(b), if VA does not provide a standard appeal form for a particular type of claim, the claim is governed by the current standard for what constitutes an NOD. As of the publication of this proposed rule, VA only expects regularly to provide a standard appeal form for compensation claims and similar monetary benefits claims. However, VA may choose to provide standard forms with AOJ decisions for other benefits lines as the volume and dynamics of VA's workload continue to evolve. Additionally, if VA fails to provide a standard appeal form to the claimant due to a case-specific error, the claimant would still be able to initiate an appeal under the current standard for an NOD where a written communication expressing dissatisfaction or disagreement and a desire to contest the result will constitute an NOD. See proposed § 20.201(b).

The second sentence would make clear that if the AOJ provides a standard form with its decision, triggering the applicability of § 20.201(a), VA will not accept a document or communication in any other format as an NOD. VA believes this rule is necessary to make use of the standard form mandatory and maximize improvement and efficiency in the appellate process. Additionally, VA proposes to clarify that submitting a different VA form does not meet the standard for an NOD in cases governed by § 20.201(a). Many VA forms, such as VA Form 21–4138, *Statement in Support of Claim,* are so generic that they would not yield the clarity and standardization this proposed rule change is designed to achieve.

In the future, different standard forms may be developed for different benefit lines. Under this proposed rule, the particular version provided with the AOJ decision must be used. For example, if a claimant received an AOJ decision relating to a compensation claim and received a compensation-focused form (such as VA Form 21–0958, *Notice of Disagreement*) from the AOJ, the claimant could not initiate an appeal by returning a different form developed for the purpose of initiating appeals of AOJ decisions relating to home loan guaranty.

In proposed § 20.201(a)(2), we would make clear that VA may ''provide'' the form to the claimant electronically or in paper format. VA proposes that if a claimant has an online benefits account such as eBenefits, notifications within the system that provide a link to a standard appeal form would be considered sufficient for the AOJ to have ''provided'' the form to the claimant and trigger the applicability of § 20.201(a). Similarly, if a claimant has provided VA with an email address for the purpose of receiving communications from VA, emailing either a copy of the form itself or a hyperlink where that form may be accessed is sufficient. The email should identify that the hyperlink is to a required VA appeal form.

Finally, if a claimant has chosen to interact with VA through paper, VA would provide a paper version of the standard form in connection with its decision. The specific piece of paper that is sent to the claimant need not be returned in order to constitute an NOD, but the same form must be returned. In other words, if a claimant is sent a copy of a particular form, he or she must return a completed copy of that form, but not necessarily the same piece of paper that was mailed to the claimant.

In § 20.201(a)(3), we would make clear that any indication whatsoever in the claimant's claims file or benefits account of provision of a form would be sufficient to presume the form was provided, triggering the applicability of § 20.201(a) rather than § 20.201(b). Under this rule, an indication as minimal as a statement in a decision notification letter such as ''Attached: VA Form 21–0958'' would be sufficient to trigger the presumption that the form was provided and § 20.201(a) governs. *See Butler* v. *Principi,* 244 F.3d 1337, 1339–41 (Fed. Cir. 2001) (presumption of regularity applies to the administration of veterans benefits). This would reflect existing law and VA practice. To avoid unnecessary record retention, when VA sends a standard form to a claimant, it ordinarily does not place a copy of that blank form in the claims file. However, other documents in the file may indicate that the form was sent. Courts have held that such indications support a presumption that

the form was in fact sent to the claimant. We believe it would be helpful to note this general principle in this rule.

In § 20.201(a)(4), we would make clear that, if a standard VA form requires some degree of specificity from the claimant as to which issues the claimant seeks to appeal, the claimant must indeed provide the information the form requests in order for the submission to constitute an NOD. Part of the rationale for requiring standard VA forms, particularly for the appeals of compensation claims, is that they enable VA to identify the substance of an appeal as early as possible in the process. Additionally, inputs from the claimant in a standardized format are much more easily turned into data that can be used in evaluating and processing a claim or appeal. Accordingly, when a form requests a specific contention from the claimant as to the issues appealed, we propose that the claimant be required to provide it. For example, the form used in the Houston RO pilot provided separate boxes allowing claimants to identify those issues with which they were expressing disagreement. VA believes it would be helpful to the process to have this requirement in the governing regulation.

In § 20.201(a)(5), we would make clear that the filing of an alternate form or other communication does not extend, toll, or otherwise delay the time limit for filing an NOD. We would make clear that returning the incorrect VA form, including a form designed to appeal a different benefit, would not extend the deadline for filing an NOD. VA believes enforcing this policy is necessary in order to bring efficiency to appeals processing.

In proposed § 20.201(c), we would make clear that we do not propose to require a standardized form for simultaneously contested claims, which are claims in which the award of benefits to one person may result in the disallowance or reduction of benefits to another person. 38 CFR 20.3(p). Such claims arise only rarely and, irrespective of the nature of the benefit sought, they commonly present unique issues involving marital or other relationships of different individuals claiming entitlement to the same or similar benefits based on their relationship to the same veteran. Further, in 38 U.S.C. 7105A, Congress has prescribed a 60-day time limit for filing NODs in simultaneously contested claims. In view of these claims unique features, we do not propose to alter the governing standards. Moreover, because simultaneously contested claims constitute a very small portion of VA's appellate caseload, excluding those claims from the requirement to use standardized forms will not significantly affect the objectives of this rule. We, therefore, propose to state in new paragraph (c) of § 20.201 that the provisions of § 20.201(b) apply to simultaneously contested claims. However, claimants in simultaneously contested claims could use a standard VA form, when feasible, even though they would not be required to do so.

X. Procedure for Standard NOD Forms

VA proposes the creation of two new sections in part 19. New § 19.23 would generally clarify which procedures apply to appeals governed by proposed § 20.201(a), and which apply to appeals governed by proposed § 20.201(b). New § 19.23(b) would clarify that current procedures in §§ 19.26 through 19.28 would continue to apply to appeals of benefits decisions governed by § 20.201(b), and new § 19.23(a) would make clear that these procedures would apply only to those cases. In other words, the provisions of §§ 19.26 through 19.28 would apply only to appeals of AOJ decisions relating to cases in which no standard form was provided by the AOJ for the purpose of initiating an appeal. New § 19.23(a) would clarify that the procedures in new § 19.24 would apply to appeals of AOJ decisions for cases in which the AOJ provides a form for the purpose of initiating an appeal, which are governed by § 20.201(a). By creating this new clarifying section, VA hopes to eliminate any confusion potentially caused by the fact that §§ 19.26 through 19.28 would no longer apply to the overwhelming majority of VA's appellate caseload, but must be retained for processing NODs relating to other benefits for which no standardized NOD form is provided.

In paragraph (a) of proposed new § 19.24, we would make clear that VA's practice of reexamining a claim whenever an NOD is received and determining if additional review or development is warranted would also apply to NODs submitted on standardized forms.

In paragraph (b) of proposed new § 19.24, we would outline procedures for when a claimant submits the correct form timely but incomplete. VA believes that the authority to require a claimant to use a particular form necessarily implies the authority to require that the form be completed, to include identifying each specific issue on which review of the AOJ decision is desired. VA strongly believes that, if veterans provide all information requested on the standardized VA form, this will lead to the fastest possible result for that individual veteran and the VA appellate system will work more efficiently for all veterans. Accordingly, if VA determines a form is incomplete, VA may require the claimant to timely file a completed version of the form.

In § 19.24(b)(1), we would describe the standard by which VA would determine whether or not a form to initiate an appeal is complete, both in general and for compensation claims in particular. In general, a claimant must provide all information the form requests in order for that form to be considered complete. In compensation claims, a form would be considered incomplete if it does not enumerate the issues or conditions for which appellate review is sought, and identify, in general terms, the nature of the disagreement. With respect to the nature of disagreement, the form used in the Houston RO pilot-directed claimants to indicate, for each appealed condition, whether they disagree with the AOJ's decision on the question of service connection, disability evaluation, effective date, and/or any other question. This information enables VA to more efficiently process appeals and avoid expending time and other resources on matters the claimant does not contest. We would also make clear that if a form enumerates some, but not all, of the issues or conditions which were the subject of the AOJ decision, the form would be considered complete with respect to the issues on appeal, and any issues or medical conditions not enumerated would not be considered appealed on the basis of the filing of that form. Of course, there is nothing to prevent a claimant from later filing a subsequent form initiating appeals of other issues within the AOJ decision, provided such an action is still timely.

We wish to clarify that it is not VA's intention to be overly technical in determining whether claimants have completed a form. The purpose of this rule is the orderly and efficient processing of veterans' claims and appeals, not the exclusion of legitimate appeals, and VA's decision to deem a form incomplete and request completion will be guided by this principle. *See Robinson* v. *Shinseki,* 557 F.3d 1355, 1361 (Fed. Cir. 2009) (''[i]n direct appeals, all filings must be read 'in a liberal manner' whether or not the veteran is represented''). VA does intend to require use of the correct form, and does intend to require that information requested by that form be provided, because VA believes those requirements are crucial to the standardization of inputs this rule hopes

to achieve. VA does not intend to deem a form incomplete and request further completion unless that is a reasonable course to facilitate orderly processing and consideration of the appeal.

In § 19.24(b)(2), we would make clear that incomplete forms must be completed within 60 days from the date of VA's request for clarification, or the remainder of the period in which to initiate an appeal of the AOJ decision, whichever is later. VA proposes to provide this 60-day grace period in order to protect the claimant's rights in the event the statutory deadline has passed when VA determines the claimant has filed an incomplete form. Given that submission of the correct form would clearly identify to AOJ personnel that a claimant wishes to pursue an appeal, VA would accept the incomplete form for purposes of determining whether a claimant has met the statutory deadline. However, the claimant must complete the form within the 60-day timeframe. This time requirement would correspond to the 60-day period provided in 38 CFR 19.26(c) for clarification of an ambiguous NOD filed under the traditional process.

In § 19.24(b)(3), we would state that if the completed form arrives within the timeframe established in paragraph (b)(2), VA would treat the completed form as the NOD. This proposed rule would make clear that no action would be taken on the basis of the incomplete form. In particular, if the incomplete form does not enumerate specific issues on which the claimant wishes to initiate an appeal, and the completed form does, only those issues that are enumerated on the completed form would be considered as having been appealed. Any conditions or issues not identified on the completed form would not be considered appealed on the basis of the filing of the incomplete form.

In § 19.24(b)(4), we would state that if no completed form is received within the timeframe established in paragraph (b)(2), the decision of the AOJ shall become final. VA believes the policy embodied in proposed paragraphs (b)(3) and (b)(4) is necessary to keep incomplete forms from becoming a significant exception to the standardization this rule is intended to achieve.

In proposed § 19.24(b)(5), we would make clear that if a form is so incomplete that the claimant to whom it pertains is unidentifiable, no action would be taken on the basis of the submission of that form and the form would be discarded. VA will always attempt to discern the claimant to whom the form pertains based on any statements or other information provided before discarding the form.

To ensure other regulatory sections that discuss NODs are consistent with these proposed changes, VA also proposes to make minor revisions to a few other sections. Specifically, VA proposes to revise § 3.2600, which discusses optional de novo review procedures at the AOJ after an NOD is filed, to cross reference the format and timeliness requirements of § 20.201, and either § 20.302(a) or § 20.501(a), as applicable, in the first sentence of paragraph (a). We also propose to revise § 20.3(c), which currently defines an appellant as ''a claimant who has initiated an appeal to the Board of Veterans' Appeals by filing a Notice of Disagreement pursuant to the provisions of 38 U.S.C. 7105.'' Since 38 U.S.C. 7105 only requires that an NOD be submitted in writing, VA proposes to revise 38 CFR 20.3(c) to cross reference the proposed format requirements in § 20.201, and the timeliness requirements of either § 20.302(a) or § 20.501(a), as applicable. VA believes this revision would ensure that there is no confusion regarding what requirements a claimant must follow to submit a valid NOD. Similarly, § 20.200 currently provides, in part, that an appeal includes ''a timely filed Notice of Disagreement in writing.'' VA proposes to revise § 20.200 to replace ''in writing'' with cross references to § 20.201, and either § 20.302(a) or § 20.501(a), as applicable.

Paperwork Reduction Act

The Paperwork Reduction Act of 1995 (44 U.S.C. 3507(d)) requires that VA consider the impact of paperwork and other information collection burdens imposed on the public. According to the 1995 amendments to the Paperwork Reduction Act (5 CFR 1320.8(b)(2)(vi)), an agency may not collect or sponsor the collection of information, nor may it impose an information collection requirement, unless it displays a currently valid Office of Management and Budget (OMB) control number. This proposed rule includes provisions constituting collections of information under the Paperwork Reduction Act of 1995 (44 U.S.C. 3501 through 3521) that require approval by OMB.

Comments on the collections of information contained in this proposed rule should be submitted to the Office of Management and Budget, Attention: Desk Officer for the Department of Veterans Affairs, Office of Information and Regulatory Affairs, Washington, DC 20503 or emailed to *OIRA_Submission@omb.eop.gov,* with copies sent by mail or hand delivery to the Director, Regulations Management (02REG), Department of Veterans Affairs, 810 Vermont Avenue NW., Room 1068, Washington, DC 20420; fax to (202) 273–9026; or submitted through *www.Regulations.gov.* Comments should indicate that they are submitted in response to ''RIN 2900–AO81—Standard Claims and Appeals Forms.''

The Department considers comments by the public on proposed collections of information in:

- Evaluation whether the proposed collections of information are necessary for the proper performance of the functions of the Department, including whether the information will have practical utility;
- Evaluating the accuracy of the Department's estimate of the burden of the proposed collections of information, including the validity of the methodology and assumptions used;
- Enhancing the quality, usefulness, and clarity of the information to be collected; and
- Minimizing the burden of the collections of information on those who are to respond, including through the use of appropriate automated, electronic, mechanical, or other technological collection techniques or other forms of information technology, e.g., permitting electronic submission of responses.

The collections of information contained in 38 CFR 3.154, 3.155, 3.812, and 20.201 are described immediately following this paragraph, under their respective titles.

Title: Standard Claims and Appeals Forms.

Summary of collection of information: The Department of Veterans Affairs (VA) through its Veterans Benefits Administration (VBA) administers an integrated program of beneits and services, established by law, for veterans, service personnel, and their dependents and/or beneficiaries. Title 38 U.S.C. 5101(a) provides that a specific claim in the form provided by the Secretary must be filed in order for benefits to be paid to any individual under the laws administered by the Secretary. The amended collection of information in proposed 38 CFR 3.154, 3.155, 3.812, and 20.201 would require claimants to submit VA prescribed applications in either paper or electronic submission of responses, where applicable, in order to initiate the claims or appeals process for all VA benefits, to include but not limited to: entitlement under 38 U.S.C. 1151, which governs disability compensation and death benefits for a qualifying disability or death of a veteran from VA treatment, examination or vocational

rehabilitation; disability compensation; non-service connected pension; and dependency and indemnity compensation (DIC), death pension, and accrued benefits. In addition, under this rulemaking, we propose to require claimants to submit a standard form to initiate an appeal. Information is requested by this form under the authority of 38 U.S.C. 7105.

Description of need for information and proposed use of information: There is no substantive change in the need for information and proposed use of information collected for the following affected OMB-approved Control Numbers:

• 2900–0791 (VA Form 21–0958)—This form will be used by claimants to indicate a disagreement with a decision issued by a Regional Office to initiate an appeal.

• 2900–0001 (VA Form 21–526 and 21–526b)—These forms are used to gather the necessary information to determine a veteran's eligibility, dependency, and income, as applicable, for the compensation and/or pension benefit sought without which information would prevent a determination of entitlement;

• 2900–0743 (VA Form 21–526c)—This form is used to gather necessary information from service members filing claims under the Benefits Delivery at Discharge or Quick Start programs under Title 38 U.S.C. 5101(a) used in a joint effort between VA and Department of Defense (DoD) for the expeditious process of determining entitlement to compensation disability benefits;

• 2900–0002 (VA Form 21–527)—This form is used to gather the necessary information to determine a veteran's eligibility and dependency, as applicable, for disability pension sought without which information would prevent a determination of entitlement;

• 2900–0004 (VA Form 21–534)—This form is used to gather necessary information to determine the eligibility of surviving spouses and children for dependency and indemnity compensation (DIC), death pension, accrued benefits and death compensation;

• 2900–0004 (VA Form 21–534a)—This form is used to gather necessary information to determine the eligibility of surviving spouses and children of veterans who died while on active duty service for DIC, death pension, accrued benefits, and death compensation;

• 2900–0005 (VA Form 21–535)—This form is used to gather necessary information to determine a parent's eligibility, dependency and income, as applicable, for the death benefit sought; and

• 2900–0747 (VA Forms 21–526EZ, 21–527EZ, and 21–534EZ)—These forms are used to gather the necessary information to determine a veteran's eligibility, dependency, and income, as applicable, for the compensation and/or pension and disability pension and to determine the eligibility of surviving spouses, children and parents for dependency and indemnity compensation (DIC), death pension, accrued benefits and death compensation as well as other benefits.

• 2900–0572 (VA Form 21–0304—This form is used to gather the necessary information to determine eligibility for the monetary allowance and the appropriate level of payment for a child with spina bifida who is the natural child of a veteran who served in the Republic of Vietnam during the Vietnam era and for a chld with certain birth defects who is the natural child of a female veteran who served in the Republic of Vietnam during the Vietnam era.

• 2900–0721 (VA Form 21–2680)—This form is used to gather the necessary information to determine eligibility for the aid and attendance and/or household benefit.

• 2900–0067 (VA Form 21–4502)—This form is used to gather the necessary information to determine if a veteran or serviceperson is entitled to an automobile allowance and adaptive equipment.

• 2900–0390 (VA Form 21–8924)—This form is used to gather the necessary information to determine if the application meets the Restored Entitlement Program for Survivors (REPS) program which pays VA benefits to certain surviving spouses and children of veterans who died in service prior to August 13, 1981 or who died as a result of a service-connected disability incurred or aggravated prior to August 13, 1981.

• 2900–0404 (VA Form 21–8940)—This form is used to gather the necessary information to determine whether individual unemployability benefits may be paid to a veteran who has a service-connected disability(ies) which result in an inability to secure or follow substantially gainful occupation.

• 2900–0132 (VA Form 26–4555)—This form is used to gather the necessary information to determine the eligibility for the Specially Adapted Housing (SAH) or Special Housing Adaptations (SHA) benefits for disabled veterans or servicemembers.

Description of likely respondents: There is no substantive change in the description of likely respondents for the following affected OMB-approved Control Numbers:

• 2900–0791 (VA Form 21–0958)—Veterans or claimants who indicate disagreement with a decision issued by a Regional Office (RO) will use VA Form 21–0958 in order to initiate the appeals process. The veteran or claimant may or may not continue with an appeal to the Board of Veterans Appeals (BVA). If the veteran or claimant opts to continue to BVA for an appeal, this form will be included in the claim folder as evidence.

• 2900–0001 (VA Form 21–526 and 21–526b)—Veterans or claimants who express an intent to file for disability compensation and/or pension benefit may continue to use VA Form 21–526. Veterans or claimants who express an intent to file for disability compensation for an increased evaluation, service connection for a new disability, reopening of a previously denied disability, or for a disability secondary to an existing service connected disability or for other ancillary benefits such as aid and attendance, automobile allowance, spousal aid and attendance, or other benefit may continue to use VA Form 21–526b.

• 2900–0743 (VA Form 21–526c)—Service members filing claims under the Benefits Delivery at Discharge or Quick Start programs under Title 38 U.S.C. 5101(a) may continue to use VA Form 21–526c for disability compensation benefits.

• 2900–0002 (VA Form 21–527)—Veterans who are reapplying for VA pension benefits or previously applied for VA compensation benefits and are now applying for VA pension benefits may continue to use VA Form 21–527.

• 2900–0004 (VA Form 21–534 and 21–534a)—Claimants such as surviving spouses and children filing for dependency and indemnity compensation (DIC), death pension, accrued benefits, and death compensation claims may continue to use VA Form 21–534. Military Casualty Assistance Officers who are assisting suriving spouses and children in filing claims for death benefits may continue to use VA Form 21–534a.

• 2900–0005 (VA Form 21–535)—Claimants who are filing for benefits subsequent to the death of the veteran may continue to use VA Form 21–535.

• 2900–0747 (VA Forms 21–526EZ, 21–527EZ, and 21–534EZ)—Veterans or claimants who are filing for disability compensation, pension, dependency and indemnity compensation, death pension, accured benefits and death compensation claims and other benefits such a ancillary benefit claims and entitlement to 38 U.S.C. 1151 benefits that filed for processing in both the traditional claims system or in the

expedited claims processing system known as the Fully Developed Claims program may continue to use VA Form 21–526EZ for disability compensation; VA Form 21–527EZ for non-service connected pension benefits; and VA Form 21–534EZ for dependency and indemnity compensation, death pension, and/or accrued benefits.

• 2900–0572 (VA Form 21–0304)—Claimants who are filing for the monetary allowance and payment for a child with spina bifida who is the natural child of a veteran who served in the Republic of Vietnam during the Vietnam era and for a child with certain birth defects who is the natural child of a female veteran who served in the Republic of Vietnam during the Vietnam era may continue to use VA Form 21–0304.

• 2900–0721 (VA Form 21–2680)—Claimants who are filing for eligibility for the aid and attendance and/or household benefit may continue to use VA Form 21–2680.

• 2900–0067 (VA Form 21–4502)—Veterans or servicepersons who are filing for entitlement to an automobile allowance and adaptive equipment may continue to use VA Form 21–4502.

• 2900–0390 (VA Form 21–8924)—Certain surviving spouses and children of veterans who died in service prior to August 13, 1981 or who died as a result of a service-connected disability incurred or aggravated prior to August 13, 1981 under the Restored Entitlement Program for Survivors (REPS) program may continue to use VA Form 21–8924.

• 2900–0404 (VA Form 21–8940)—Claimants who file for individual unemployability benefits for service-connected disability(ies) which result in an inability to secure or follow substantially gainful occupation may continue to use VA Form 21–8940.

• 2900–0132 (VA Form 26–4555)—Disabled veterans or servicemembers who file for Specially Adapted Housing (SAH) or Special Housing Adaptations (SHA) benefits may continue to use VA Form 26–4555.

Estimated frequency of responses:

• 2900–0791 (VA Form 21–0958)—One time for most claimants; however, the frequency of responses is also dependent on the number of appeals submitted on this form by the claimant as VA does not limit the number of appeals that a claimant can submit.

• 2900–0001 (VA Form 21–526 and 21–526b)—One time for most beneficiaries; however, the frequency of responses is also dependent on the number of claims submitted on this form by the claimant as VA does not limit the number of claims that a claimant can submit.

• 2900–0743 (VA Form 21–526c)—One time for most beneficiaries; however, the frequency of responses is also dependent on the number of claims submitted on this form by the claimant as VA does not limit the number of claims that a claimant can submit.

• 2900–0002 (VA Form 21–527)—One time for most beneficiaries; however, the frequency of responses is also dependent on the number of claims submitted on this form by the claimant as VA does not limit the number of claims that a claimant can submit.

• 2900–0004 (VA Form 21–534 and 21–534a)—One time for most beneficiaries.

• 2900–0005 (VA Form 21–535)—One time for most beneficiaries.

• 2900–0747 (VA Forms 21–526EZ, 21–527EZ, and 21–534EZ)—One time for most beneficiaries; however, the frequency of responses is also dependent on the number of claims submitted on this form by the claimant as VA does not limit the number of claims that a claimant can submit.

• 2900–0572 (VA Form 21–0304)—One time for most beneficiaries.

• 2900–0721 (VA Form 21–2680)—One time for most beneficiaries.

• 2900–0067 (VA Form 21–4502)—One time for most beneficiaries.

• 2900–0390 (VA Form 21–8924)—One time for most beneficiaries.

• 2900–0404 (VA Form 21–8940)—One time for most beneficiaries.

• 2900–0132 (VA Form 26–4555)—One time for most beneficiaries.

Estimated average burden per response: There is no substantive change in the estimated average burden per response for the following affected OMB-approved Control Numbers:

• 2900–0791 (VA Form 21–0958)—30 minutes.

• 2900–0001 (VA Form 21–526 and 21–526b)—VA Form 21–526—1 hour; and VA Form 21–526b—15 minutes; and VA Form 21–4142—5 minutes.

• 2900–0743 (VA Form 21–526c)—15 minutes.

• 2900–0002 (VA Form 21–527)—1 hour.

• 2900–0004 (VA Form 21–534 and 21–534a)—VA Form 21–534—1 hour and 15 minutes and VA Form 534a—15 minutes.

• 2900–0005 (VA Form 21–535)—1 hour and 12 minutes.

• 2900–0747 (VA Forms 21–526EZ, 21–527EZ, and 21–534EZ)—VA Form 21–526EZ—25 minutes; VA Form 21–527EZ—25 minutes; and VA Form 21–534EZ—25 minutes.

• 2900–0572 (VA Form 21–0304)—10 minutes.

• 2900–0721 (VA Form 21–2680)—30 minutes.

• 2900–0067 (VA Form 21–4502)—15 minutes.

• 2900–0390 (VA Form 21–8924)—20 minutes.

• 2900–0404 (VA Form 21–8940)—45 minutes.

• 2900–0132 (VA Form 26–4555)—10 minutes.

Estimated number of respondents: VA anticipates the annual estimated numbers of respondents for each of the OMB-approved forms as follows:

• 2900–0791 (VA Form 21–0958)—144,000 per year as previously estimated in ICR Reference No. 201206–2900–001 and as published in the **Federal Register**, 77 FR 42556 on July 19, 2012 and 77 FR 60027 on October 1, 2012.

• 2900–0001 (VA Form 21–526 and 21–526b)—304,325 per year, based on 5-year estimated average of formal and informal initial compensation and pension claims received annually at 83,855 and formal and informal new or reopened compensation claims received annually at 217,178, in addition to the historically reported annual estimated number of responses for VA Form 21–4142 at 3,292.

• 2900–0743 (VA Form 21–526c)—161,000 per year as previously estimated in ICR Reference No. 201209–2900–010 and as published in the **Federal Register**, 77 FR 190, on October 1, 2012 and 77 FR 240 on December 13, 2012.

• 2900–0002 (VA Form 21–527)—17,111 per year, based on a 5-year estimated average of 12,253 reopened pension claims received on VA Form 21–527 in addition to an estimated number of 4,858 expected to be received for informal reopened pension claims.

• 2900–0004 (VA Form 21–534 and 21–534a)—33,864 per year, based on a 5-year estimated average of 32,438 formal and informal death benefits claims filed by surviving spouses/child in addition to a 5-year estimated number of 1,426 formal and informal death benefits claims filed by surviving spouses/child for in-service death.

• 2900–0005 (VA Form 21–535)—1,783 per year, based on a 5-year estimated average of 1,046 formal death benefits filed by parents in addition to an expected estimated number of informal death benefit claims at 737.

• 2900–0747 (VA Forms 21–526EZ, 21–527EZ, and 21–534EZ)—1,048,652 per year, based on: (a) An estimated number of both formal and informal—initial, new, reopened compensation claims at 835,910; plus (b) an estimated number of both formal and informal pension claims at 101,086; (c) an estimated number of both formal and

informal death benefit claims at 111,656, all of which total 1,048,652.

VA expanded a modified version of a pilot study, known as the Express Claim Program, for which VA Forms 21–526EZ and 21–527EZ were used. Therefore, the number of claimants expected to respond was estimated at 104,440. These EZ forms contain the section 5103 notification for disability, pension, and now death benefits in paper and electronic format. The electronic application uses the EZ form in its question prompts and generates this form upon completion of the interview process. Because this rule is structured to incentivize the electronic claims process, VA expects a substantial increase in the number of respondents for this particular Control Number.

• 2900–0572 (VA Form 21–0304)—430 per year.

• 2900–0721 (VA Form 21–2680)—14,000 per year.

• 2900–0067 (VA Form 21–4502)—1,552 per year.

• 2900–0390 (VA Form 21–8924)—1,800 per year.

• 2900–0404 (VA Form 21–8940)—24,000 per year.

• 2900–0132 (VA Form 26–4555)—4,158 per year.

OMB Control Numbers 2900–0572, 2900–0721, 2900–0067, 2900–0390, 2900–0404, and 2900–0132 are collections of information for particular benefits such as automobile allowance, housing adaptation, individual unemployability, etc., which are currently required by the VA in order for these claims to be processed and adjudicated. Since VA requires these forms to be submitted for filing of a particular benefit, VA does not expect an increase in the annual likely number of respondents. In addition, VA is not changing the substance of the collection of information on these OMB-approved collections of information nor is it increasing the respondent burden. We are including these collections of information in this rulemaking because it is relevant to the rulemaking but is not directly altered by it.

Estimated total annual reporting and recordkeeping burden:

• 2900–0791 (VA Form 21–0958)—Annual burden continues to be 72,000 hours. The total estimated cost to respondents continues to be $1,080,000 (72,000 hours × $15/hour). This submission does not involve any recordkeeping costs.

• 2900–0001 (VA Form 21–526 and 21–526b)—For VA Form 21–526, the annual burden is 83,855 hours. The total estimated cost to respondents is $1,257,825 (83,855 hours × $15/hour). This submission does not involve any recordkeeping costs. For VA Form 21–526b, the annual burden is 54,295 hours. The total estimated cost to respondents is $81,443 (54,295 hours × $15/hour). This submission does not involve any recordkeeping costs. For VA Form 21–4142, the annual burden is 263 hours. The total estimated cost to respondents is $330 (263 hours × $15/hour). This submission does not involve any recordkeeping costs.

• 2900–0743 (VA Form 21–526c)—Annual burden continues to be 40,250 hours. The total estimated cost to respondents continues to be $603,750 (40,250 hours × $15/hour). This submission does not involve any recordkeeping costs.

• 2900–0002 (VA Form 21–527)—Annual burden is 17,111 hours. The total estimated cost to respondents is $256,665 (17,111 hours × $15/hour). This submission does not involve any recordkeeping costs.

• 2900–0004 (VA Form 21–534 and 21–534a)—For VA Form 21–534, the annual burden is 40,548 hours. The total estimated cost to respondents is $608,220 (40,548 hours × $15/hour). This submission does not involve any recordkeeping costs. For VA Form 21–534a, the annual burden is 357 hours. The total estimated cost to respondents is $5,355 (3,57 hours × $15/hour). This submission does not involve any recordkeeping costs.

• 2900–0005 (VA Form 21–535)—Annual burden is 2,140 hours. The total estimated cost to respondents is $32,100 (2,140 hours × $15/hour). This submission does not involve any recordkeeping costs.

• 2900–0747 (VA Forms 21–526EZ, 21–527EZ, and 21–534EZ)—For VA Form 21–526EZ, the annual burden is 348,296 hours. The total estimated cost to respondents is $55,224,440 (348,296 hours × $15/hour). This submission does not involve any recordkeeping costs. For VA Form 21–527EZ, the annual burden is 42,119 hours. The total estimated cost to respondents is $631,785 (42,119 hours × $15/hour). This submission does not involve any recordkeeping costs. For VA Form 21–534EZ, the annual burden is 46,523 hours. The total estimated cost to respondents is $697,845 (46,523 hours × $15/hour). This submission does not involve any recordkeeping costs.

• 2900–0572 (VA Form 21–0304)—Annual burden continues to be 72 hours. The total estimated cost to respondents continues to be $1,080 (72 hours × $15/hour). This submission does not involve any recordkeeping costs.

• 2900–0721 (VA Form 21–2680)—Annual burden continues to be 7,000 hours. The total estimated cost to respondents continues to be $105,000 (7,000 hours × $15/hour). This submission does not involve any recordkeeping costs.

• 2900–0067 (VA Form 21–4502)—Annual burden continues to be 388 hours. The total estimated cost to respondents continues to be $5,820 (388 hours × $15/hour). This submission does not involve any recordkeeping costs.

• 2900–0390 (VA Form 21–8924)—Annual burden continues to be 600 hours. The total estimated cost to respondents to be $9,000 (600 hours × $15/hour). This submission does not involve any recordkeeping costs.

• 2900–0404 (VA Form 21–8940)—Annual burden continues to be 18,000 hours. The total estimated cost to respondents continues to be $270,000 (18,000 hours × $15/hour). This submission does not involve any recordkeeping costs.

• 2900–0132 (VA Form 26–4555)—Annual burden continues to be 693 hours. The total estimated cost to respondents continues to be $10,395 (693 hours × $15/hour). This submission does not involve any recordkeeping costs.

This rulemaking is proposing to mandate the use of existing VA forms in the processing and adjudication of claims and appeals. The proposed amendments to §§ 3.154, 3.155, 3.812, and 20.201 affect the estimated annual number of respondents and consequently, the estimated total annual reporting and recordkeeping burden but do not otherwise affect the existing collections of information that have already been approved by the Office of Management and Budget (OMB). The proposed use of information, description of likely respondents, estimated frequency of responses, estimated average burden per response will remain unchanged for these forms. While there is no substantive change in the aforementioned collection of information for these proposed amendments, VA foresees a change in the quantity of information collected and the total annual reporting for certain currently approved OMB control numbers on account of this rulemaking.

VA's Collection of Data

Other than for original claims and certain ancillary benefits, VA historically and currently accepts claims for benefits in any format submitted, whether on a prescribed form or not. VA has never standardized the use of forms

for claims or appeals processing.[2] VA maintains a record of the number of types of benefit claims received annually based on claim types such as original claims, claims for increase or to reopen a previously denied claim, claims for ancillary benefits, pension, and death benefits which have been submitted on the appropriate prescribed form. However, reliance on claim types based on the form submitted may not accurately capture the number of claims received. For instance, one claim type can be filed using more than one prescribed form and a claimant can file two types of claim such as a claim for increase and a claim to reopen on one prescribed VA form which will be categorized as one claim type received, i.e., recorded as either a claim for increase or a claim to reopen. For informal claims, VA has not quantified the number of informal claims received, but it quantifies the particular claim type filed in the informal claim such as original, increase, new, reopen, etc. As a result of this proposed rulemaking requiring the use of prescribed forms for all claims for benefits, VA will be able to gather and collect the data quantifying the number of prescribed forms in the future which will provide VA with a more accurate account of how many respondents will respond on various VA prescribed forms.

Electronic Claims

Due to the fact that there is no current data enumerating the total number of different types of VA forms received annually, we have projected the annual number of respondents for the forms based on the estimated number of types of claims received annually over a 5-year period. We have also approximated the number of electronic claims received for compensation, pension, and death claims. Currently, VA's electronic claims processing system, i.e., eBenefits and Veterans Online Applications (VONAPP), uses VA Form 21–526EZ for disability compensation claims submitted electronically. VA is also in the process of adding other VA forms to VONAPP such as VA Form 21–527EZ and 21–534EZ (hereinafter ''EZ forms'' will be used to refer to VA Forms 21–526EZ, 21–527EZ, and 21–534EZ, collectively). VA also provides these EZ forms to claimants who wish to submit their claims on paper because these forms expedite the claims process by: (a) offering the claimant a choice for either the expedited process of ''Fully Developed Claims'' or the traditional claims process; (b) listing more detailed questions for a variety of benefits sought in order to capture thoroughly the specifics of a claim; and (c) providing claimants with the required notice of VA's duty to assist the claimant pursuant to 38 U.S.C. 5103, which is issued at the time the claimant files a claim instead of when the VA receives the claim. The use of these EZ forms ultimately speeds up the claims process and ensures faster delivery of benefits to claimants; therefore, VA has encouraged, directed, and provided these EZ forms to claimants who wish to file benefit claims.

VA proposes to eliminate ''informal claims'' and require the submission of either a complete or incomplete electronic claim in proposed, revised § 3.155(b) as a placeholder for a potential earlier effective date. Only electronic claims will receive the possible earlier effective date for any awards granted; complete paper claims will receive the effective date based on the date of receipt by the VA. By incentivizing electronic claims processing through the authorization of a potential earlier effective date by this proposed rulemaking, VA expects the number of electronic claims to increase. Because eBenefits and VONAPP uses (and will continue to use) the EZ forms, we anticipate that the total number of annual responses received on the EZ forms electronically for all benefits will increase by at least 29 percent while the total number of annual response received on VA Forms 21–526, 21–526b, 21–527, 21–534, 21–534a, and 21–535 (''traditional forms'') will decrease. Based on data from Fiscal Year (FY) October 2010 through September 2011, the number of compensation disability claims received electronically was 142,899 and the number of total compensation disability and dependency claims received electronically was 496,851. Thus, the percentage of compensation disability electronic claims received was 29 percent. With VA's outreach and efforts to promote the electronic claims processing system and with future implementation of pension, death, and appeals electronic claims processing, VA estimates an increase of the submission of electronic claims by at least 29 percent based upon the FY 2010 through 2011 data. Since the trend is to direct claimants to submit claims on EZ forms both electronically and on paper, we approximate that 70 percent of claims will be submitted on the EZ form while 30 percent will be submitted on the traditional forms.

Informal Claims

The data used in formulating the estimated number of annual responses to the various affected prescribed forms was extrapolated from data recorded for the number of types of claims received annually for FY April 2009 through April 2013. This data is not sufficiently granular to provide the number of informal claims received given that the data only depicts the number of initial, new or reopened compensation and pension claims received and the number of initial death benefit claims received. Since informal claims may or may not be submitted on a prescribed form, there is no method for accurately recording or quantifying the total number of informal claims received or inferred annually. Therefore, we approximate that for compensation, pension, and death benefits,, 50 percent of each of these benefits are informal claims. Thus, based on the data of an average of claims received over a 5-year period, we expect that the total number of informal claims for compensation, pension, and death benefits that will be submitted on a prescribed form will increase by at least 50 percent.

Notices of Disagreement

Previously, VA estimated that the annual number of respondents submitting the currently approved collection instrument, VA Form 21–0958, *Notice of Disagreement,* (OMB Control Number 2900–0791) would be 144,000, based on VA historically receiving 12 Notices of Disagreement per 100 completed VBA decisions, with more than 1.2 million VBA decisions in FY 2012. According to data for FY 2009 to FY 2012, the average number of Notices of Disagreement received annually was 129,539. For FY 2013, it is projected that VA will receive 126,735 Notices of Disagreement. The estimate associated with the currently approved collection was based upon the assumption that all notices of disagreement would be submitted on this collection instrument, though that is not necessarily the case under current rules. As a result of this rulemaking, however, the overwhelming majority of notices of disagreement would in fact be submitted on this collection instrument, since this rulemaking proposes to require that all notices of disagreement

[2] Currently, VA accepts any claim filed subsequent to the original, initial compensation/pension claim that is submitted in any form, i.e., informal claim to initiate the claims process. For example, a claim for increase or reopen, which currently is not required to be submitted on a prescribed form, can be established using different VA forms such as VA Form 21–526 *Veteran's Application for Compensation and/or Pension;* VA Form 21–526EZ, *Application for Disability Compensation or Related Compensation;* VA Form 21–526b, *Veteran's Supplemental Claim for Compensation;* or VA Form 21–4138, *Statement in Support of Claim.*

be submitted on VA Form 21–0958 in cases where that form is provided. Accordingly, while VA does expect to receive many more completed Forms 21–0958, there is no expected increase in the annual number of respondents nor an increased burden on respondents from that reflected in currently approved collections.

Methodology for Estimated Annual Number of Respondents for Affected Forms

We have formulated the estimated total of annual responses for compensation, pension, and death benefit claims by increasing the expected number of total claims submitted on paper by 50 percent from data extrapolated for claims received annually over a 5-year period. We project that 30 percent of compensation, pension, and death benefit claims will be submitted on traditional forms whereas 70 percent will be submitted on EZ forms. Accordingly, VA expects a decrease in the total estimated number of annual responses for VA Forms 21–526, 21–527, 21–534, 21–534a, and 21–535 whereas the total estimated number of annual responses for VA Forms 21–526EZ, 21–527EZ, and 21–534EZ have increased substantially. The projected numbers for each affected form are provided in further detail in the above section, ''Estimated number of respondents,'' according to each OMB Control Number.

Regulatory Flexibility Act

The Secretary hereby certifies that these proposed regulatory amendments would not have a significant economic impact on a substantial number of small entities as they are defined in the Regulatory Flexibility Act, 5 U.S.C. 601–612. These proposed amendments would not directly affect any small entities. Only VA beneficiaries and their survivors could be directly affected. Therefore, pursuant to 5 U.S.C. 605(b), these proposed amendments are exempt from the initial and final regulatory flexibility analysis requirements of sections 603 and 604.

Executive Orders 12866 and 13563

Executive Orders 12866 and 13563 direct agencies to assess the costs and benefits of available regulatory alternatives and, when regulation is necessary, to select regulatory approaches that maximize net benefits (including potential economic, environmental, public health and safety effects, and other advantages; distributive impacts; and equity). Executive Order 13563 (Improving Regulation and Regulatory Review) emphasizes the importance of quantifying both costs and benefits, reducing costs, harmonizing rules, and promoting flexibility. Executive Order 12866 (Regulatory Planning and Review) defines a ''significant regulatory action,'' which requires review by OMB, as ''any regulatory action that is likely to result in a rule that may: (1) Have an annual effect on the economy of $100 million or more or adversely affect in a material way the economy, a sector of the economy, productivity, competition, jobs, the environment, public health or safety, or State, local, or tribal governments or communities; (2) Create a serious inconsistency or otherwise interfere with an action taken or planned by another agency; (3) Materially alter the budgetary impact of entitlements, grants, user fees, or loan programs or the rights and obligations of recipients thereof; or (4) Raise novel legal or policy issues arising out of legal mandates, the President's priorities, or the principles set forth in this Executive Order.''

The economic, interagency, budgetary, legal, and policy implications of this regulatory action have been examined, and it has been determined to be a significant regulatory action under Executive Order 12866, as it raises novel legal or policy issues arising out of legal mandates.

VA's impact analysis can be found as a supporting document at *http://www.regulations.gov,* usually within 48 hours after the rulemaking document is published. Additionally, a copy of the rulemaking and its impact analysis are available on VA's Web site at *http://www1.va.gov/orpm/,* by following the link for ''VA Regulations Published.''

Unfunded Mandates

The Unfunded Mandates Reform Act of 1995 requires, at 2 U.S.C. 1532, that agencies prepare an assessment of anticipated costs and benefits before issuing any rule that may result in an expenditure by State, local, and tribal governments, in the aggregate, or by the private sector of $100 million or more (adjusted annually for inflation) in any given year. This proposed rule would have no such effect on State, local, and tribal governments, or on the private sector.

Catalog of Federal Domestic Assistance Numbers and Titles

The Catalog of Federal Domestic Assistance program numbers and titles for this rule are 64.100, Automobiles and Adaptive Equipment for Certain Disabled Veterans and Members of the Armed Forces; 64.101, Burial Expenses Allowance for Veterans; 64.102, Compensation for Service-Connected Deaths for Veterans' Dependents; 64.103, Life Insurance for Veterans; 64.104, Pension for Non-Service-Connected Disability for Veterans; 64.105, Pension to Veterans Surviving Spouses, and Children; 64.106, Specially Adapted Housing for Disabled Veterans; 64.109, Veterans Compensation for Service-Connected Disability; 64.110, Veterans Dependency and Indemnity Compensation for Service-Connected Death; 64.114, Veterans Housing-Guaranteed and Insured Loans; 64.115, Veterans Information and Assistance; 64.116,Vocational Rehabilitation for Disabled Veterans; 64.117, Survivors and Dependents Educational Assistance; 64.118, Veterans Housing-Direct Loans for Certain Disabled Veterans; 64.119, Veterans Housing-Manufactured Home Loans; 64.120, Post-Vietnam Era Veterans' Educational Assistance; 64.124, All-Volunteer Force Educational Assistance; 64.125, Vocational and Educational Counseling for Servicemembers and Veterans; 64.126, Native American Veteran Direct Loan Program; 64.127, Monthly Allowance for Children of Vietnam Veterans Born with Spina Bifida; and 64.128, Vocational Training and Rehabilitation for Vietnam Veterans' Children with Spina Bifida or Other Covered Birth Defects.

Signing Authority

The Secretary of Veterans Affairs, or designee, approved this document and authorized the undersigned to sign and submit the document to the Office of the Federal Register for publication electronically as an official document of the Department of Veterans Affairs. Jose D. Riojas, Interim Chief of Staff, Department of Veterans Affairs, approved this document on July 8, 2013, for publication.

List of Subjects

38 CFR Part 3

Administrative practice and procedure, Claims, Disability benefits, Health care, Pensions, Radioactive materials, Veterans, Vietnam.

38 CFR Parts 19 and 20

Administrative practice and procedure, Claims, Veterans.

Approved: July 8, 2013.

Robert C. McFetridge,

Director, Office of Regulation Policy & Management, Department of Veterans Affairs.

For the reasons set forth in the preamble, VA proposes to amend 38 CFR parts 3, 19, and 20 as follows:

PART 3—ADJUDICATION

Subpart A—Pension, Compensation, and Dependency and Indemnity Compensation

■ 1. The authority citation for part 3, subpart A continues to read as follows:

Authority: 38 U.S.C. 501(a), unless otherwise noted.

■ 2. In § 3.1, revise paragraph (p) to read as follows:

§ 3.1 Definitions.

* * * * *

(p) *Claim* means a written communication requesting a determination of entitlement or evidencing a belief in entitlement, to a specific benefit under the laws administered by the Department of Veterans Affairs.

* * * * *

§ 3.150 [Amended]

■ 3. Amend § 3.150 by removing paragraph (c).

■ 4. Revise § 3.154 to read as follows:

§ 3.154 Injury due to hospital treatment, etc.

Claimants must file a complete claim on the appropriate paper or electronic form prescribed by the Secretary when applying for benefits under 38 U.S.C. 1151 and 38 CFR 3.361. See §§ 3.151 and 3.400(i) concerning effective dates of awards.

Authority: 38 U.S.C. 501 and 1151.

■ 5. Revise § 3.155 to read as follows:

§ 3.155 Claims.

The provisions of this section are applicable to all claims governed by part 3 of this chapter.

(a) *Non-electronic claims.* This paragraph applies to all claims which do not qualify for processing under paragraph (b) of this section. A complete non-electronic claim will be considered filed as of the date it was received by VA for an evaluation or award of benefits under the laws administered by the Department of Veterans Affairs.

(b) *Electronic claims.* This paragraph applies to requests for benefits under the laws administered by the Department of Veterans Affairs submitted through a claims submission tool within a VA web-based electronic claims application system. A claim submitted by a claimant, his or her duly authorized representative, a Member of Congress, or some person acting as next friend of a claimant who is not of full age or capacity that does not meet the standards of a complete claim may be considered an incomplete claim. If a complete electronic claim is filed within 1 year of the incomplete electronic claim, the electronic claim will be considered filed as of the date of the incomplete electronic claim for an evaluation or award of benefits under the laws administered by the Department of Veterans Affairs. Only one complete claim may be associated with each incomplete claim, though multiple issues may be contained within a complete claim. In the event multiple complete claims are filed within 1 year of an incomplete claim, only the first may be associated with the incomplete claim.

(c) *Request for an application for benefits.* Without limitation, the following types of communications or actions do not constitute a claim of any kind and are considered a request for an application for benefits under § 3.150(a) of this part. Upon receipt of such a communication or action, the Secretary shall notify the claimant and the claimant's representative, if any, of the information necessary to complete the application.

(1) Any communication or action indicating an intent to apply for one or more benefits under the laws administered by the Department of Veterans Affairs, from a claimant, his or her duly authorized representative, a Member of Congress, or some person acting as next friend of a claimant who is not of full age or capacity that does not meet the standards of a complete claim;

(2) A communication indicating a belief in entitlement to benefits submitted on a paper form prescribed by the Secretary that is not complete; or

(3) An electronic mail, transmitted through VA's electronic portal or otherwise, that indicates an intent to apply for one or more benefits or a belief in entitlement to benefits under the laws administered by the Department of Veterans Affairs from a claimant, his or her duly authorized representative, a Member of Congress, or some person acting as next friend of a claimant who is not of full age or capacity, that does not meet the standards of a complete claim. Cross Reference: Effective dates. See § 3.400.

§ 3.157 [Removed]

■ 6. Remove § 3.157.

■ 7. Revise § 3.160 to read as follows:

§ 3.160 Types of claims.

(a) *Complete claim.* A submission on a paper or electronic form prescribed by the Secretary that is fully filled out and provides all requested information. This includes, but is not limited to, meeting the following requirements:

(1) A complete claim must be signed by the claimant or a person legally authorized to sign for the claimant.

(2) A complete claim must identify the benefit sought.

(3) For compensation claims, a description of any symptom(s) or medical condition(s) on which the benefit is based must be provided to the extent the form prescribed by the Secretary so requires.

(4) For a nonservice-connected disability or death pension and parents' dependency and indemnity compensation claims, a statement of income must be provided to the extent the form prescribed by the Secretary so requires.

(b) *Incomplete claim.* See § 3.155(b) of this part.

(c) *Original claim.* The initial complete claim for one or more benefits on an application or form prescribed by the Secretary.

(d) *New or supplemental claim.* An application filed subsequent to the original claim which may consist of the following:

(1) A claim for a new benefit unrelated to a currently awarded benefit such as service connection for a new or different disability from one for which service connection has already been awarded;

(2) A claim for a new or additional benefit directly related to a currently awarded benefit including, but not limited to, a request for entitlement of benefits based upon secondary service connection; or claims for aid and attendance, housebound, special monthly compensation or pension, special monthly dependency and indemnity compensation, death compensation, pension, spousal aid and attendance or housebound benefits, dependents benefits such as helpless child, specially adapted housing, special home adaptation, clothing allowance, or automobile allowance;

(3) Claims of clear and unmistakable error.

(e) *Pending claim.* A claim which has not been finally adjudicated.

(f) *Finally adjudicated claim.* A claim that is adjudicated by the Department of Veterans Affairs as either allowed or disallowed is considered finally adjudicated by whichever of the following occurs first:

(1) The expiration of the period in which to file a notice of disagreement, pursuant to the provisions of § 20.302(a) or § 20.501(a) of this chapter, as applicable; or,

(2) Disposition on appellate review.

(g) *Reopened claim.* An application for a benefit received after final disallowance of an earlier claim that is

subject to readjudication on the merits based on receipt of new and material evidence related to the finally adjudicated claim, or any claim based on additional evidence or a request for a personal hearing submitted more than 90 days following notification to the appellant of the certification of an appeal and transfer of applicable records to the Board of Veterans' Appeals which was not considered by the Board in its decision and was referred to the agency of original jurisdiction for consideration as provided in § 20.1304(b)(1) of this chapter.

(h) *Claim for increase.* An application for an increase in a currently awarded benefit(s) which may consist of any of the following:

(1) An increased evaluation for a specific disability(ies);

(2) A claim for supplemental benefits such as aid and attendance, housebound, or special monthly compensation;

(3) A claim for an increased rating based on total disability based on individual unemployability, when not contained in the original claim.

(4) An increased evaluation for a specific service-connected disability(ies) which is/are based on a claim for temporary total disability due to hospitalization of more than 21 days or due to surgical or other treatment requiring convalescence of at least one month;

(5) Request for resumption of payments previously discontinued.

■ 8. Amend § 3.400 by revising paragraph (o)(2) and adding an authority citation to read as follows:

§ 3.400 General.

* * * * *

(o) * * *

(2) *Disability compensation.* Earliest date as of which it is factually ascertainable that an increase in disability had occurred if a complete claim is received within 1 year from such date, otherwise, date of receipt of claim. When medical records indicate an increase in a disability, receipt of such medical records may be used to establish effective date(s) for retroactive benefits based on facts found of an increase in a disability only if a complete claim for an increase is received within 1 year of the date of the report of examination, hospitalization, or medical treatment. The provisions of this paragraph apply only when such reports relate to examination or treatment of a disability for which service-connection has previously been established.

(Authority: 38 U.S.C. 510, 5101)

* * * * *

■ 9. Amend § 3.812 by revising paragraphs (e) and (f) to read as follows:

§ 3.812 Special allowance payable under section 156 of Pub. L. 97–377.

* * * * *

(e) *Claims—complete and incomplete.* Claimants must file or submit a complete claim on a paper or electronic form prescribed by the Secretary in order for VA to pay this special allowance. When incomplete claims or inquiries as to eligibility are received, the procedures outlined in § 3.155 of this part will be followed. The date of receipt of the complete claim will be accepted as the date of claim for this special allowance. See §§ 3.150, 3.151, 3.155, 3.400 of this part.

(f) *Retroactivity and effective dates.* There is no time limit for filing a claim for this special allowance. Upon the filing of a complete claim, benefits shall be payable for all periods of eligibility beginning on or after the first day of the month in which the claimant first became eligible for this special allowance, except that no payment may be made for any period prior to January 1, 1983.

* * * * *

Subpart D—Universal Adjudication Rules That Apply to Benefit Claims Governed by Part 3 of This Title

■ 10. The authority citation for part 3, subpart D, continues to read as follows:

Authority: 38 U.S.C. 501(a), unless otherwise noted.

■ 11. In § 3.2600, amend paragraph (a) by revising the first sentence to read as follows:

§ 3.2600 Review of benefit claims decisions.

(a) A claimant who has filed a Notice of Disagreement submitted in accordance with the provisions of § 20.201 of this chapter, and either § 20.302(a) or § 20.501(a) of this chapter, as applicable, with a decision of an agency of original jurisdiction on a benefit claim has a right to a review of that decision under this section. * * *

* * * * *

PART 19—BOARD OF VETERANS' APPEALS: APPEALS REGULATIONS

■ 12. The authority citation for part 19 continues to read as follows:

Authority: 38 U.S.C. 501(a), unless otherwise noted.

Subpart B—Appeals Processing by Agency of Original Jurisdiction

■ 13. Add §§ 19.23 and 19.24 to read as follows:

§ 19.23 Applicability of provisions concerning Notice of Disagreement

(a) Appeals governed by § 20.201(a) of this chapter shall be processed in accordance with § 19.24 of this part. Sections 19.26, 19.27 and 19.28 of this part shall not apply to appeals governed by § 20.201(a) of this chapter.

(b) Appeals governed by § 20.201(b) of this chapter shall be processed in accordance with §§ 19.26, 19.27, and 19.28 of this part.

§ 19.24 Action by agency of original jurisdiction on Notice of Disagreement required to be filed on a standardized form.

(a) *Initial action.* When a timely Notice of Disagreement in accordance with the requirements of § 20.201(a) of this chapter is filed, the agency of original jurisdiction may reexamine the claim and determine whether additional review or development is warranted.

(b) *Incomplete appeal forms.* In cases governed by paragraph (a) of § 20.201 of this chapter, if VA determines a form filed by the claimant is incomplete and requests verification, the claimant must timely file a completed version of the correct form in order to initiate an appeal.

(1) *Completeness.* In general, a form may be considered incomplete if any of the information requested is not provided, including without limitation the claimant's signature, information to identify the claimant and the claim to which the form pertains, and any information necessary to identify the specific nature of the disagreement if the form so requires. For compensation claims, a form will be considered incomplete if it does not enumerate the issues or conditions for which appellate review is sought, or does not provide other information required on the form to identify the claimant, the date of the VA action the claimant seeks to appeal, and the nature of the disagreement (such as disagreement with disability rating, effective date, or denial of service connection). If a form enumerates some but not all of the issues or conditions which were the subject of the decision of the agency of original jurisdiction, the form will be considered complete with respect to the issues on appeal, and any issues or conditions not enumerated will not be considered appealed on the basis of the filing of that form.

(2) *Timeframe to complete correct form.* If VA requests clarification of an incomplete form, a complete form must be received within 60 days from the

date of the request, or the remainder of the period in which to initiate an appeal of the decision of the agency of original jurisdiction, whichever is later.

(3) *Form timely completed.* If a completed form is received within the timeframe set forth in paragraph (b)(2) of this section, VA will treat the completed form as the Notice of Disagreement, and no action will be taken on the basis of the incomplete form. Any decisions on conditions or issues not identified on the completed form will not be treated as appealed and will accordingly become final.

(4) *Form not timely completed.* If no completed form is received within this timeframe set forth in paragraph (b)(2) of this section, the decision of the agency of original jurisdiction will become final.

(5) *Claimant unidentifiable.* If VA cannot identify the claimant to whom a particular form pertains, the form will be discarded and no action will be taken on the basis of the submission of that form.

PART 20—BOARD OF VETERANS' APPEALS: RULES OF PRACTICE

■ 14. The authority citation for part 20 continues to read as follows:

Authority: 38 U.S.C. 501(a) and as noted in specific sections.

Subpart A—General

■ 15. In § 20.3, revise paragraph (c) to read as follows:

§ 20.3 Rule 3. Definitions.

* * * * *

(c) *Appellant* means a claimant who has initiated an appeal to the Board of Veterans' Appeals by filing a timely Notice of Disagreement pursuant to the provisions of § 20.201, and either § 20.302(a) or § 20.501(a) of this part, as applicable.

* * * * *

Subpart C—Commencement and Perfection of Appeal

■ 16. Revise § 20.200 to read as follows:

§ 20.200 Rule 200. What constitutes an appeal.

An appeal consists of a timely filed Notice of Disagreement submitted in accordance with the provisions of § 20.201, and either § 20.302(a) or § 20.501(a) of this part, as applicable and, after a Statement of the Case has been furnished, a timely filed Substantive Appeal.

■ 17. Revise § 20.201 to read as follows:

§ 20.201 Rule 201. Notice of Disagreement.

(a) Cases in which a form is provided by the agency of original jurisdiction for purpose of initiating an appeal.

(1) *Format.* For every case in which the agency of original jurisdiction (AOJ) provides, in connection with its decision, a form for the purpose of initiating an appeal, a Notice of Disagreement consists of a completed and timely submitted copy of that form. VA will not accept as a notice of disagreement an expression of dissatisfaction or disagreement with an adjudicative determination by the agency of original jurisdiction and a desire to contest the result that is submitted in any other format, including on a different VA form.

(2) *Provision of form to the claimant.* If a claimant has established an online benefits account with VA, or has designated an email address for the purpose of receiving communications from VA, VA may provide an appeal form pursuant to paragraph (a)(1) of this section electronically, whether by email, hyperlink, or other direction to the appropriate form within the claimant's online benefits account. VA may also provide a form pursuant to paragraph (a)(1) of this section in paper format.

(3) *Presumption form was provided.* This paragraph (a) applies if there is any indication whatsoever in the claimant's file or electronic account that a form was sent pursuant to paragraph (a)(1) of this section.

(4) *Specificity required by form.* If the agency of original jurisdiction gave notice that adjudicative determinations were made on several issues at the same time, the specific determinations with which the claimant disagrees must be identified to the extent a form provided pursuant to paragraph (a)(1) of this section so requires. If the claimant wishes to appeal all of the issues decided by the agency of original jurisdiction, the form must clearly indicate that intent. Issues not identified on the form will not be considered appealed.

(5) *Alternate form or other communication.* The filing of an alternate form or other communication will not extend, toll, or otherwise delay the time limit for filing a Notice of Disagreement, as provided in § 20.302(a) of this part. In particular, returning the incorrect VA form, including a form designed to appeal a different benefit does not extend, toll, or otherwise delay the time limit for filing the correct form.

(b) *Cases in which no form is provided by the agency of original jurisdiction for purpose of initiating an appeal.* A written communication from a claimant or his or her representative expressing dissatisfaction or disagreement with an adjudicative determination by the agency of original jurisdiction and a desire to contest the result will constitute a Notice of Disagreement relating to a claim for benefits in any case in which the agency of original jurisdiction does not provide a form identified as being for the purpose of initiating an appeal. The Notice of Disagreement must be in terms which can be reasonably construed as disagreement with that determination and a desire for appellate review. If the agency of original jurisdiction gave notice that adjudicative determinations were made on several issues at the same time, the specific determinations with which the claimant disagrees must be identified.

(c) *Simultaneously contested claims.* The provisions of paragraph (b) of this section shall apply to appeals in simultaneously contested claims under §§ 20.500 and 20.501 of this part, regardless of whether a standardized form was provided with the decision of the agency of original jurisdiction.

[FR Doc. 2013–25968 Filed 10–30–13; 8:45 am]

BILLING CODE 8320–01–P

FEDERAL REGISTER

Vol. 78 Thursday,

No. 211 October 31, 2013

Part IV

The President

Proclamation 9046—Death of Thomas S. Foley Former Speaker of the House of Representatives

Federal Register
Vol. 78, No. 211
Thursday, October 31, 2013

Presidential Documents

Title 3—

The President

Proclamation 9046 of October 28, 2013

Death of Thomas S. Foley Former Speaker of the House of Representatives

By the President of the United States of America

A Proclamation

As a mark of respect for the memory of Thomas S. Foley, former Speaker of the House of Representatives, by the authority vested in me as President of the United States by the Constitution and laws of the United States of America, I hereby order that the flag of the United States shall be flown at half-staff at the White House and upon all public buildings and grounds, at all military posts and naval stations, and on all naval vessels of the Federal Government in the District of Columbia and throughout the United States and its Territories and possessions on Tuesday, October 29, 2013. I also direct that the flag shall be flown at half-staff on that day at all United States embassies, legations, consular offices, and other facilities abroad, including all military facilities and naval vessels and stations.

IN WITNESS WHEREOF, I have hereunto set my hand this twenty-eighth day of October, in the year of our Lord two thousand thirteen, and of the Independence of the United States of America the two hundred and thirty-eighth.

[FR Doc. 2013–26278
Filed 10–30–13; 11:15 am]
Billing code 3295–F4

Reader Aids

Federal Register

Vol. 78, No. 211

Thursday, October 31, 2013

CUSTOMER SERVICE AND INFORMATION

Federal Register/Code of Federal Regulations	
General Information, indexes and other finding aids	**202–741–6000**
Laws	**741–6000**
Presidential Documents	
Executive orders and proclamations	**741–6000**
The United States Government Manual	**741–6000**
Other Services	
Electronic and on-line services (voice)	**741–6020**
Privacy Act Compilation	**741–6064**
Public Laws Update Service (numbers, dates, etc.)	**741–6043**
TTY for the deaf-and-hard-of-hearing	**741–6086**

ELECTRONIC RESEARCH

World Wide Web

Full text of the daily Federal Register, CFR and other publications is located at: **www.fdsys.gov.**

Federal Register information and research tools, including Public Inspection List, indexes, and Code of Federal Regulations are located at: **www.ofr.gov.**

E-mail

FEDREGTOC-L (Federal Register Table of Contents LISTSERV) is an open e-mail service that provides subscribers with a digital form of the Federal Register Table of Contents. The digital form of the Federal Register Table of Contents includes HTML and PDF links to the full text of each document.

To join or leave, go to **http://listserv.access.gpo.gov** and select *Online mailing list archives, FEDREGTOC-L, Join or leave the list (or change settings);* then follow the instructions.

PENS (Public Law Electronic Notification Service) is an e-mail service that notifies subscribers of recently enacted laws.

To subscribe, go to **http://listserv.gsa.gov/archives/publaws-l.html** and select *Join or leave the list (or change settings);* then follow the instructions.

FEDREGTOC-L and **PENS** are mailing lists only. We cannot respond to specific inquiries.

Reference questions. Send questions and comments about the Federal Register system to: **fedreg.info@nara.gov**

The Federal Register staff cannot interpret specific documents or regulations.

Reminders. Effective January 1, 2009, the Reminders, including Rules Going Into Effect and Comments Due Next Week, no longer appear in the Reader Aids section of the Federal Register. This information can be found online at **http://www.regulations.gov.**

CFR Checklist. Effective January 1, 2009, the CFR Checklist no longer appears in the Federal Register. This information can be found online at **http://bookstore.gpo.gov/.**

FEDERAL REGISTER PAGES AND DATE, OCTOBER

60177–60652 1
60653–61152 2
61153–61802 3
61803–61936 4
61937–61948 7
61949–61982 8
61983–61988 9
61989–62004 10
62005–62292 11
62293–62304 15
62305–62328 16
62329–62334 17
62335–62356 18
62357–62416 21
62417–62954 22
62955–63368 23
63369–63822 24
63823–64152 25
64153–64388 28
64389–64872 29
64873–65144 30
65145–65514 31

CFR PARTS AFFECTED DURING OCTOBER

At the end of each month the Office of the Federal Register publishes separately a List of CFR Sections Affected (LSA), which lists parts and sections affected by documents published since the revision date of each title.

1 CFR

Proposed Rules:
51 60784

3 CFR

Proclamations:
9024 60177
9025 60179
9026 61151
9027 61803
9028 61805
9029 61807
9030 61809
9031 61811
9032 61813
9033 61815
9034 62305
9035 62307
9036 62309
9037 62311
9038 62313
9039 62315
9040 62335
9041 62337
9042 62339
9043 62955
9044 62957
9045 64387
9046 65513

Executive Orders
11145 (Continued by 13652) 63367
11183 (Continued by 13652) 63367
11287 (Continued by 13652) 63367
11612 (Continued by 13652) 63367
12131 (Continued by 13652) 63367
12216 (Continued by 13652) 63367
12367 (Continued by 13652) 63367
12382 (Continued by 13652) 63367
12829 (Continued by 13652) 63367
12905 (Continued by 13652) 63367
12994 (Continued by 13652) 63367
13231 (Continued by 13652) 63367
12365 (Continued by 13652) 63367
13640 (Continued by 13652) 63367
13515 (Continued by 13652) 63367
13521 (Continued by 13652) 63367
13522 (Continued by 13652) 63367
13532 (Continued by 13652) 63367
13538 (Continued by 13652) 63367
13539 (Continued by 13652) 63367
13540 (Continued by 13652) 63367
13559 (Continued by 13652) 63367
13634 (Continued by 13652) 63367
13600 (Continued by 13652) 63367
13621 (Continued by 13652) 63367
13631 (Continued by 13652) 63367
13585 (Superseded in part by 13652) 63367
13591 (Superseded in part by 13652) 63367
13538 (Amended by 13652) 63367
13043 (Amended by 13652) 63367
13231 (Amended by 13652) 63367
13652 61817

Administrative Orders
Memorandums:
Memo. of September 27, 2013 62413
Notices:
Notice of October 16, 2013 62341
Notice of October 23, 2013 64151
Presidential Determinations:
No. 2014–01 of October 2, 2013 62415
No. 2014–02 of October 10, 2013 62953
No. 2013–17 of September 30, 2013 63367

5 CFR

532 ..... 60181, 60182
890 ..... 60653, 64873
892 64873
894 64873
2641 61153

7 CFR

205 61154
210 64153
215 64153
220 64153
225 64153

226....64153
245....64153
301....63369
305....63373
920....62959
922....62961, 62963
946....62967
Proposed Rules:
993....63128
1210....64408

8 CFR

Proposed Rules:
293....64183

9 CFR

Proposed Rules:
2....63408
3....63408

10 CFR

72....63375
429....62970, 63823
430....62970, 62988, 63823
431....62970, 62988
Proposed Rules:
50....63901
51....64412, 64413
55....63901
72....63375
429....62472, 64068, 64296
430....62488, 62494, 63410, 64068, 65223
431....62472, 64296
810....64414

12 CFR

3....62018
5....62018
6....62018
46....64153
165....62018
167....62018
208....62018
217....62018
225....62018
324....62417
Ch. VI....63380
610....63379
652....65145
741....64879, 64883
748....64883
Ch. X....64389
1002....60382
1024....60382, 62993
1026....60382, 62993
1227....63007
1805....65151
Proposed Rules:
22....65108
172....65108
208....65108
339....65108
391....65108
614....65108
760....65108

13 CFR

121....61114
124....61114
125....61114
126....61114
127....61114

14 CFR

25....63845, 63847, 63848, 65133, 65155, 65156
34....63015, 63017
39....60182, 60185, 60186, 60188, 60656, 60658, 60660, 60667, 60670, 60673, 60676, 60679, 60681, 61161, 61164, 61168, 61171, 61173, 61177, 63850, 63852, 63853, 63855, 63858, 64156, 64159, 64162, 64164, 64394, 65161, 65163, 65166, 65169, 65171, 65173, 65176, 65178, 65180, 65183, 65185, 65187, 65190, 65193, 65195, 65198, 65200, 65202, 65204, 65206
45....63015, 63017
71....60683, 61179, 63380, 63861, 65208
73....63860, 63866, 63867, 63868, 63869
97....64167, 64168, 64170, 64172
Proposed Rules:
25....62495, 63902, 64415, 65231, 65233, 65235
39....60798, 60800, 60804, 60807, 61220, 63130, 63132, 63135, 63429, 63431, 63903, 63907, 64417, 64419, 64421, 64894
71....60235, 60236, 60237, 62498, 65237, 65238, 65239, 65241
73....60238

15 CFR

730....61744
732....61744
734....61744, 61874
736....61744
738....61744, 61874
740....61744, 61874
742....61744, 61874
743....61744
744....61744
746....61744
748....61744, 61874
750....61744, 61874
756....61744
758....61744
762....61744
764....61744
770....61744
772....61744, 61874
774....61744, 61874
Proposed Rules:
922....64186

16 CFR

4....64885
1112....63019
1218....63019
Proposed Rules:
312....64423

17 CFR

23....64173
232....60684
Proposed Rules:
229....60560
230....61222
239....61222
249....60560

18 CFR

40....63036

19 CFR

10....60191, 63052
24....60191, 63052
162....60191, 63052
163....60191, 63052
178....60191, 63052
351....62417
354....62417
356....62417
Proposed Rules:
351....60240

20 CFR

718....60686
725....60686

21 CFR

510....63870
520....63870
522....63870
524....63870
558....63870
1240....63872
Proposed Rules:
16....64425, 64736
225....64425, 64736
500....64425, 64736
507....64425, 64428, 64736
579....64425, 64736
1308....61991, 62500

22 CFR

120....61750
121....61750
123....61750
126....61750
233....64175

24 CFR

903....63748
905....63748
941....63748
968....63748
969....63748
3282....60193

25 CFR

543....63873

26 CFR

1....62418, 62426, 64396
Proposed Rules:
1....64430

27 CFR

9....60686, 60690, 60693

28 CFR

524....63875

29 CFR

552....60454
4022....62426
Proposed Rules:
1910....65242
1915....65242
1926....65242

30 CFR

250....60208
924....64397
Proposed Rules:
925....63909
926....63911

31 CFR

Ch. 11....60695

32 CFR

199....62427
236....62430
706....62438
Proposed Rules:
199....62506

33 CFR

100....62329
117....61180, 62439, 64178, 64886, 64887
165....60216, 60218, 60220, 60222, 60698, 61183, 61185, 61937, 62293, 63381
Proposed Rules:
117....63136, 64186, 64189
165....61223

34 CFR

Proposed Rules:
Ch. I–VI....63913

36 CFR

7....63069
Proposed Rules:
1192....65244

37 CFR

Ch. I....61185
1....62368
3....62368
11....62368

38 CFR

17....62441
Proposed Rules:
3....65490
12....63139
17....63143
19....65490
20....65490

39 CFR

Proposed Rules:
20....63433, 63434
111....63915

40 CFR

9....62443
49....60700
51....62451
52....60225, 60704, 61188, 62455, 62459, 63093, 63383, 63388, 63394, 63877, 63878, 63881, 63883, 63887, 64402
62....63887
70....63887
80....62462
81....60704, 62459
180....60707, 60709, 60715, 60720
300....60721, 63099, 65210
312....64403
721....62443
Proposed Rules:
49....62509
52....62523, 63145, 63148, 63435, 63436, 63437, 63929, 63933, 63934, 63937, 64430, 64896
62....63937
70....63937

122....64435
123....64435
127....64435
180....63938
300....60809
403....64435
501....64435
503....64435

41 CFR

Ch. 301....65210
301-11....65210
301-74....65210
304-3....65210
304-5....65210

42 CFR

412....61191, 61197
413....61202
424....61202
482....61197
485....61197, 64604
489....61197

Proposed Rules:

121....60810

43 CFR

Proposed Rules:

10....64436

44 CFR

64....65212

Proposed Rules:

206....61227

45 CFR

144....65046
146....65046
147....65046
153....65046
155....65046
156....65046

46 CFR

Proposed Rules:

153....64905

47 CFR

20....64404
87....61203

Proposed Rules:

1....64191, 64442
2....64442
25....64442
27....64191, 64442
64....61250, 63152
73....61251
101....64442

48 CFR

212....65214
215....65214
225....65214
237....65218
245....65219
252....65214, 65220, 65221

Proposed Rules:

212....65244
225....65244
237....65244
242....65244
252....65244
1815....64442
1852....64442

49 CFR

107....60726, 60745
109....60755
130....60745
171....60745, 65454
172....60745, 65454
173....60745, 60763, 60766, 65454
174....60745
175....65454
176....65454
177....60745
178....60745, 65454
179....60745
180....60745
350....60226
381....60226
383....60226
384....60226
385....60226
386....60226
387....60226
390....63100
392....60226
395....64179

Proposed Rules:

Ch. VI....61251
821....63438

50 CFR

17....60608, 60766, 61004, 61208, 61452, 61506, 63100, 63796, 64638, 64692
217....63396
229....61821
622....61826, 61827, 61939, 61989, 64181, 64888
648....61828, 61838, 62331, 62471, 63405, 63406, 63892, 64182, 64889
679....61990, 62005, 63899, 64891, 64892

Proposed Rules:

17....60813, 61046, 61082, 61273, 61293, 61622, 61764, 62523, 62529, 62560, 63574, 63625, 64192, 64328, 64358, 64446, 64840, 65248
223....63439, 63941
224....63941, 65249
622....62579, 63946
679....63951

LIST OF PUBLIC LAWS

Note: No public bills which have become law were received by the Office of the Federal Register for inclusion in today's **List of Public Laws**.

Last List October 18, 2013

Public Laws Electronic Notification Service (PENS)

PENS is a free electronic mail notification service of newly enacted public laws. To subscribe, go to *http://listserv.gsa.gov/archives/publaws-l.html*

Note: This service is strictly for E-mail notification of new laws. The text of laws is not available through this service. **PENS** cannot respond to specific inquiries sent to this address.