AUTHENTICATED
U.S. GOVERNMENT
INFORMATION
GPO

FEDERAL REGISTER

Vol. 78 Monday,
No. 213 November 4, 2013

Part IV

Department of Energy

10 CFR Parts 429, 430 and 431
Energy Conservation Program for Consumer Products and Certain Commercial and Industrial Equipment: Test Procedures for Residential and Commercial Water Heaters; Proposed Rule

DEPARTMENT OF ENERGY

10 CFR Parts 429, 430 and 431

[Docket Number EERE–2011–BT–TP–0042]

RIN 1904–AC53

Energy Conservation Program for Consumer Products and Certain Commercial and Industrial Equipment: Test Procedures for Residential and Commercial Water Heaters

AGENCY: Office of Energy Efficiency and Renewable Energy, Department of Energy.

ACTION: Notice of proposed rulemaking and announcement of public meeting.

SUMMARY: The U.S. Department of Energy (DOE) proposes to revise its test procedure for residential water heaters and certain commercial water heaters established under the Energy Policy and Conservation Act. This rulemaking will fulfill DOE's statutory obligation for residential and certain commercial water heaters to review its test procedure for covered products and equipment at least once every seven years. In addition, this rulemaking will satisfy DOE's statutory obligation to develop a uniform efficiency descriptor for residential and commercial water heaters. The proposed test method would apply the same efficiency descriptor to all residential and certain commercial water heaters, and it would extend coverage to eliminate certain gaps in the current residential test procedure, update the simulated-use-test draw pattern, and update the water delivery temperature requirement. DOE is also announcing a public meeting to discuss and receive comments on issues presented in this test procedure rulemaking.

DATES:

Comments: DOE will accept comments, data, and information regarding this notice of proposed rulemaking (NOPR) before and after the public meeting, but no later than January 21, 2014. See section V, ''Public Participation,'' for details.

Meeting: DOE will hold a public meeting on December 6, 2013 from 9:00 a.m. to 4:00 p.m., in Washington, DC. The meeting will also be broadcast as a webinar. See section V, ''Public Participation,'' for webinar registration information, participant instructions, and information about the capabilities available to webinar participants.

ADDRESSES: The public meeting will be held at the U.S. Department of Energy, Forrestal Building, Room 8E–089, 1000 Independence Avenue SW., Washington, DC 20585. To attend, please notify Ms. Brenda Edwards at (202) 586–2945. Please note that foreign nationals visiting DOE Headquarters are subject to advance security screening procedures. Any foreign national wishing to participate in the meeting should advise DOE as soon as possible by contacting Ms. Edwards at the phone number above to initiate the necessary procedures. Please also note that any person wishing to bring a laptop computer into the Forrestal Building will be required to obtain a property pass. Visitors should avoid bringing laptops, or allow an extra 45 minutes. Persons may also attend the public meeting via webinar. For more information, refer to section V, ''Public Participation,'' near the end of this notice of proposed rulemaking.

Interested persons are encouraged to submit comments using the Federal eRulemaking Portal at *www.regulations.gov*. Follow the instructions for submitting comments. Alternatively, interested persons may submit comments, identified by docket number EERE–2011–BT–TP–0042 and/or RIN 1904–AC53, by any of the following methods:

- *Email: HeatingProducts-2011-TP-0042@ee.doe.gov*. Include EERE–2011–BT–TP–0042 and/or RIN 1904–AC53 in the subject line of the message. Submit electronic comments in WordPerfect, Microsoft Word, PDF, or ASCII file format, and avoid the use of special characters or any form of encryption.
- *Postal Mail:* Ms. Brenda Edwards, U.S. Department of Energy, Building Technologies Office, Mailstop EE–2J, 1000 Independence Avenue SW., Washington, DC 20585–0121. If possible, please submit all items on a compact disc (CD), in which case it is not necessary to include printed copies.
- *Hand Delivery/Courier:* Ms. Brenda Edwards, U.S. Department of Energy, Building Technologies Office, 950 L'Enfant Plaza SW., 6th Floor, Washington, DC 20024. Telephone: (202) 586–2945. If possible, please submit all items on a CD, in which case it is not necessary to include printed copies.

Instructions: All submissions received must include the agency name and docket number and/or RIN for this rulemaking. No telefacsimilies (faxes) will be accepted. For detailed instructions on submitting comments and additional information on the rulemaking process, see section V of this document (Public Participation).

Docket: The docket is available for review at including Federal Register notices, public meeting attendee lists and transcripts, comments, and other supporting documents/materials. All documents in the docket are listed in the index. However, not all documents listed in the index may be publicly available, such as information that is exempt from public disclosure.

A link to the docket Web page can be found at: *http://www.regulations.gov/#!docketDetail;D=EERE-2011-BT-TP-0042*. This Web page contains a link to the docket for this notice of proposed rulemaking on the site. The Web page contains simple instructions on how to access all documents, including public comments, in the docket. See section V, ''Public Participation,'' for information on how to submit comments through *www.regulations.gov*.

For information on how to submit a comment, review other public comments and the docket, or participate in the public meeting, contact Ms. Brenda Edwards at (202) 586–2945 or by email: *Brenda.Edwards@ee.doe.gov*.

FOR FURTHER INFORMATION CONTACT: Ms. Ashley Armstrong, U.S. Department of Energy, Office of Energy Efficiency and Renewable Energy, Building Technologies Office, EE–2J, 1000 Independence Avenue SW., Washington, DC 20585–0121. Telephone: (202) 586–6590. Email: *Ashley.Armstrong@ee.doe.gov*.

Mr. Eric Stas, U.S. Department of Energy, Office of the General Counsel, GC–71, 1000 Independence Avenue SW., Washington, DC 20585–0121. Telephone: (202) 586–9507. Email: *Eric.Stas@hq.doe.gov*.

For information on how to submit or review public comments, contact Ms. Brenda Edwards, U.S. Department of Energy, Office of Energy Efficiency and Renewable Energy, Building Technologies Office, EE–2J, 1000 Independence Avenue SW., Washington, DC 20585–0121. Telephone: (202) 586–2945. Email: *Brenda.Edwards@ee.doe.gov*.

SUPPLEMENTARY INFORMATION:

Table of Contents

I. Authority and Background
II. Summary of the Notice of Proposed Rulemaking
III. Discussion
A. Scope
1. Coverage Range of Uniform Metric and Test Procedure
2. Storage Capacity Limits
3. Input Capacity Limits
4. Electric Instantaneous Water Heaters
B. Uniform Efficiency Descriptor
C. Draw Pattern
D. Instrumentation
E. Discrete Performance Tests
F. Test Conditions
1. Water Delivery Temperature
2. Ambient Temperature and Relative Humidity
3. Laboratory Airflow

G. Annual Energy Consumption Calculation
H. Conversion of Existing Energy Factor Ratings
I. Other Issues
J. Certification, Compliance, and Enforcement Issues
K. Reference Standards
L. Compliance With Other EPCA Requirements
IV. Procedural Issues and Regulatory Review
A. Review Under Executive Order 12866
B. Review Under the Regulatory Flexibility Act
C. Review Under the Paperwork Reduction Act of 1995
D. Review Under the National Environmental Policy Act of 1969
E. Review Under Executive Order 13132
F. Review Under Executive Order 12988
G. Review Under the Unfunded Mandates Reform Act of 1995
H. Review Under the Treasury and General Government Appropriations Act, 1999
I. Review Under Executive Order 12630
J. Review Under Treasury and General Government Appropriations Act, 2001
K. Review Under Executive Order 13211
L. Review Under Section 32 of the Federal Energy Administration Act of 1974
V. Public Participation
A. Attendance at the Public Meeting
B. Procedure for Submitting Requests to Speak and Prepared General Statements for Distribution
C. Conduct of the Public Meeting
D. Submission of Comments
E. Issues on Which DOE Seeks Comment
VI. Approval of the Office of the Secretary

I. Authority and Background

Title III, Part B [1] of the Energy Policy and Conservation Act of 1975 (''EPCA'' or ''the Act''), Public Law 94–163 (42 U.S.C. 6291–6309, as codified) sets forth a variety of provisions designed to improve energy efficiency and established the Energy Conservation Program for Consumer Products Other Than Automobiles.[2] These include residential water heaters, one subject of today's notice of proposed rulemaking. (42 U.S.C. 6292(a)(4)) Title III, Part C [3] of EPCA, Public Law 94–163 (42 U.S.C. 6311–6317, as codified), added by Public Law 95–619, Title IV, Sec. 441(a), established the Energy Conservation Program for Certain Industrial Equipment, which includes the commercial water-heating equipment that is another subject of this rulemaking. (42 U.S.C. 6311(1)(K))

Under EPCA, energy conservation programs generally consist of four parts: (1) Testing; (2) labeling; (3) establishing Federal energy conservation standards; and (4) certification and enforcement procedures. The testing requirements consist of test procedures that manufacturers of covered products and equipment must use as both the basis for certifying to DOE that their products and equipment comply with the applicable energy conservation standards adopted pursuant to EPCA, and for making other representations about the efficiency of those products. (42 U.S.C. 6293(c); 42 U.S.C. 6295(s); 42 U.S.C. 6314) Similarly, DOE must use these test requirements to determine whether the products comply with any relevant standards promulgated under EPCA. (42 U.S.C. 6295(s))

Under 42 U.S.C. 6293, EPCA sets forth the criteria and procedures that DOE must follow when prescribing or amending test procedures for residential water heaters. EPCA provides, in relevant part, that any test procedures prescribed or amended under this section must be reasonably designed to produce test results which measure energy efficiency, energy use, or estimated annual operating cost of a covered product during a representative average use cycle or period of use, and must not be unduly burdensome to conduct. (42 U.S.C. 6293(b)(3)) In addition, if DOE determines that a test procedure amendment is warranted, it must publish proposed test procedures and offer the public an opportunity to present oral and written comments on them. (42 U.S.C. 6293(b)(2))

For commercial water heaters, EPCA requires that if the test procedure referenced in the American Society of Heating, Refrigerating, and Air-Conditioning Engineers (ASHRAE) Standard 90.1 is updated, DOE must update its test procedure to be consistent with the amended test procedure in ASHRAE Standard 90.1, ''Energy Standard for Buildings Except Low-Rise Residential Buildings,'' unless DOE determines by rule published in the **Federal Register** and supported by clear and convincing evidence, that the amended test procedure is not reasonably designed to produce test results which reflect the energy efficiency, energy use, or estimated operating costs of that type of ASHRAE equipment during a representative average use cycle. In addition, DOE must determine that the amended test procedure is not unduly burdensome to conduct. (42 U.S.C. 6314(a)(2) and (4))

In any rulemaking to amend a test procedure, DOE must determine the extent to which the proposed test procedure would alter the product's measured energy efficiency. (42 U.S.C. 6293(e)(1)) If DOE determines that the amended test procedure would alter the measured efficiency of a covered product, DOE must amend the applicable energy conservation standard accordingly. (42 U.S.C. 6293(e)(2))

Further, the Energy Independence and Security Act of 2007 (EISA 2007) amended EPCA to require that at least once every 7 years, DOE must review test procedures for all covered products and either amend test procedures (if the Secretary determines that amended test procedures would more accurately or fully comply with the requirements of 42 U.S.C. 6293(b)(3) for residential products or 42 U.S.C. 6314(a)(2)-(3) for commercial equipment) or publish notice in the **Federal Register** of any determination not to amend a test procedure. (42 U.S.C. 6293(b)(1)(A); 42 U.S.C. 6314(a)(1)(A)) Under this requirement, DOE must review the test procedures for residential water heaters not later than December 19, 2014 (*i.e.,* 7 years after the enactment of EISA 2007), and DOE must review the test procedures for commercial water heaters not later than May 16, 2019 (*i.e.,* 7 years after the last final rule for commercial water heater test procedures [4]). Thus, the final rule resulting from this rulemaking will satisfy the requirement to review the test procedures for residential and certain commercial water heaters every seven years.

DOE's test procedure for residential water heaters is found in the Code of Federal Regulations (CFR) at 10 CFR 430.23(e) and 10 CFR part 430, subpart B, appendix E. The test procedure includes provisions for determining the energy efficiency (energy factor (EF)), as well as the annual energy consumption of these products. DOE's test procedure for commercial water heaters is found at 10 CFR 431.106; that test procedure incorporates by reference American National Standards Institute (ANSI) Z21.10.3, *Gas Water Heaters—Volume III, Storage Water Heaters With Input Ratings Above 75,000 Btu Per Hour, Circulating and Instantaneous,* and provides a method for determining the thermal efficiency and standby loss of this equipment.

In addition to the test procedure review provision discussed above, EISA 2007 also amended EPCA to require DOE to amend its test procedures for all covered residential products to include measurement of standby mode and off mode energy consumption. (42 U.S.C. 6295(gg)(2)(A)) Consequently, DOE recently completed a rulemaking to

[1] For editorial reasons, upon codification in the U.S. Code, Part B was redesignated as Part A.

[2] All references to EPCA in this document refer to the statute as amended through the American Energy Manufacturing Technical Corrections Act (AEMTCA), Public Law 112–210 (Dec. 18, 2012).

[3] For editorial reasons, upon codification in the U.S. Code, Part C was redesignated Part A–1.

[4] On May 16, 2012, DOE published a final rule in the **Federal Register** amending the test procedures for commercial water heaters. 77 FR 28928.

consider amending its test procedure for residential water heaters to include provisions for measuring the standby mode and off mode energy consumption of those products. Pursuant to the requirements of EPCA, DOE published a notice of proposed rulemaking (NOPR) in the **Federal Register** on August 30, 2010, for three different residential heating products (water heaters, pool heaters, and direct heating equipment) related to standby mode and off mode energy consumption, but the NOPR proposed no amendments to the DOE test procedure for residential water heaters because DOE tentatively concluded that standby mode and off mode energy consumption was already accounted for in the existing DOE test method.[5] 75 FR 52892, 52895. Subsequently, DOE published a final rule in the **Federal Register** on December 17, 2012, which affirmed its conclusion that no changes were needed to the existing test procedure for residential water heaters. 77 FR 74559, 74561–74562. However, that rulemaking was limited to consideration of test procedure amendments to address the above-referenced standby mode and off mode requirements; it did not address several other potential issues in DOE's existing test procedure for residential water heaters. DOE addresses these issues in today's NOPR.

On October 12, 2011, DOE published in the **Federal Register** a request for information (RFI) that identified and requested comment on a number of issues regarding the test procedures for residential water heaters. 76 FR 63211. DOE accepted comments and information on the RFI until November 28, 2011, and considered all feedback received when developing the proposals contained in this notice. Each of the issues raised in the RFI is discussed in detail in section III, along with comments received on the issues and DOE's responses. In addition, several topics not addressed in the RFI but brought up by interested parties in their comments are discussed in section III of this NOPR.

On December 18, 2012, the American Energy Manufacturing Technical Corrections Act (AEMTCA), Public Law 112–210, was signed into law. In relevant part, it amended EPCA to require that DOE publish a final rule establishing a uniform efficiency descriptor and accompanying test methods for covered residential water heaters and commercial water heating equipment within one year of the enactment of AEMTCA. (42 U.S.C. 6295(e)(5)(B)) The final rule must replace the current energy factor, thermal efficiency, and standby loss metrics with a uniform efficiency descriptor. (42 U.S.C. 6295(e)(5)(C)) AEMTCA requires that, beginning one year after the date of publication of DOE's final rule establishing the uniform descriptor, the efficiency standards for covered water heaters must be denominated according to the uniform efficiency descriptor established in the final rule (42 U.S.C. 6295(e)(5)(D)), and that DOE must develop a mathematical conversion factor for converting the measurement of efficiency for covered water heaters from the test procedures and metrics currently in effect to the new uniform energy descriptor. (42 U.S.C. 6295(e)(5)(E)(i)–(ii)) After the effective date of the final rule, covered water heaters shall be considered to comply with the final rule and with any revised labeling requirements established by the Federal Trade Commission (FTC) to carry out the final rule, if the covered water heater was manufactured prior to the effective date of the final rule and complies with the efficiency standards and labeling requirements in effect prior to the final rule. (42 U.S.C. 6295(e)(5)(K))

AEMTCA also requires that the uniform efficiency descriptor and accompanying test method apply, to the maximum extent practicable, to all water-heating technologies currently in use and to future water-heating technologies. (42 U.S.C. 6295(e)(5)(H)) AEMTCA allows DOE to provide an exclusion from the uniform efficiency descriptor for specific categories of otherwise covered water heaters that do not have residential uses, that can be clearly described, and that are effectively rated using the current thermal efficiency and standby loss descriptors. (42 U.S.C. 6295(e)(5)(F))

AEMTCA outlines DOE's various options for establishing a new uniform efficiency descriptor for water heaters. The options that AEMTCA provides to DOE include: (1) A revised version of the energy factor descriptor currently in use; (2) the thermal efficiency and standby loss descriptors currently in use; (3) a revised version of the thermal efficiency and standby loss descriptors; (4) a hybrid of descriptors; or (5) a new approach. (42 U.S.C. 6295(e)(5)(G)) Lastly, AEMTCA requires that DOE invite stakeholders to participate in the rulemaking process, and that DOE contract with the National Institute of Standards and Technology (NIST), as necessary, to conduct testing and simulation of alternative descriptors identified for consideration. (42 U.S.C. 6295(e)(5)(I)–(J))

DOE published an RFI on January 11, 2013 requesting input on the various issues pertaining to water heaters discussed in AEMTCA. 78 FR 2340. The feedback received from stakeholders was taken into consideration and is discussed further in section III of this NOPR.

II. Summary of the Notice of Proposed Rulemaking

In this NOPR, DOE proposes to modify the current test procedures for residential water heaters and certain commercial water heaters. The proposed amendments would modify the test procedure to be more representative of conditions encountered in the field (including modifications to both the test conditions and the draw patterns) and expand the scope of the test procedure to apply to certain commercial water heaters and certain residential water heaters that are currently not covered by the test procedure. The following paragraphs summarize these proposed changes.

DOE proposes to modify the test procedure for water heaters to establish a uniform descriptor that can be applied to: (1) All residential water heaters (including certain residential water heaters that are covered products under EPCA's definition of ''water heater'' at 42 U.S.C. 6291(27), but that are not covered under the existing test method); and (2) to certain commercial water heaters that have residential applications. This includes the proposed establishment of test procedure provisions that are applicable to water heaters with storage volumes between 2 gallons (7.6 L) and 20 gallons (76 L), and the proposed creation of a definition for ''electric instantaneous water heater.'' In addition, DOE proposes to establish a new equipment class of commercial water heaters and corresponding definition for ''light commercial water heater.'' DOE proposes to require water heaters that would be classified as ''light commercial'' to be tested using the test procedure for the uniform efficiency descriptor being proposed in this NOPR.

DOE is also proposing the use of multiple draw patterns for testing water heaters, with certain draw patterns prescribed as a function of equipment capacity. Further, DOE proposes updates to the water heater draw pattern to be more reflective of actual field usage based on recent field test data. Lastly, DOE is modifying the water delivery temperature requirement to better reflect conditions as seen in typical installations in the field.

[5] For more information, please visit DOE's Web site at: *http://www1.eere.energy.gov/buildings/appliance_standards/residential/waterheaters.html.*

III. Discussion

In response to the October 2011 RFI, DOE received 19 written comments related to water heaters from the following interested parties: Pacific Gas and Electric Company (PGE), Applied Energy Technology (AET), Davis Energy Group, American Council for an Energy-Efficient Economy (ACEEE), Southern California Edison (SCE), National Renewable Energy Laboratory (NREL), Natural Resources Canada (NRCan), Natural Resources Defense Council (NRDC), Air-Conditioning, Heating, and Refrigeration Institute (AHRI), Northwest Energy Efficiency Alliance (NEEA), American Gas Association (AGA), National Propane Gas Association (NPGA), A.O. Smith Corporation (AO Smith), Bradford White Corporation (Bradford White), Lochinvar, Stone Mountain Technologies, Bosch Thermotechnology Corp. (Bosch), General Electric Company (GE), and ASHRAE.

In response to the January 2013 RFI, DOE received 18 written comments from the following interested parties: NREL, Bradford White, AGA, NPGA, AHRI, AO Smith, joint efficiency advocates (joint comment),[6] GE, NEEA, Rheem Manufacturing Company (Rheem), American Public Gas Association (APGA), Edison Electric Institute (EEI), Heat Transfer Products Inc. (HTP), Natural Resources Canada (NRCan), Seisco International Limited (Seisco), Aquarensics, and two separate comments from the University of Houston—Clear Lake (UHCL1, UHCL2).

These interested parties commented on a range of issues, including those identified by DOE in the October 2011 RFI and the January 2013 RFI, as well as several other pertinent issues. The issues on which DOE received comment, as well as DOE's response to those comments and the resulting proposed changes to the test procedures for water heaters, are discussed in the subsections immediately below.

A. Scope

DOE's test procedures for residential water heaters codified at 10 CFR 430.23(e) and 10 CFR part 430, subpart B, appendix E address gas-fired, electric, and oil-fired storage-type (*i.e.,* storage volume not less than 20 gallons (76 L)) and gas-fired and electric instantaneous-type (*i.e.,* storage volume less than 2 gallons (7.6 L)) water heaters. However, the DOE test procedure does not define ''electric instantaneous water heater.'' In addition, it does not address the following types of products: (1) Gas-fired water heaters that have a storage volume at or above 2 gallons and less than 20 gallons (76 L); (2) electric storage water heaters with storage volume less than 20 gallons (76 L); and (3) storage water heaters with very large storage capacities, including oil-fired water heaters with storage volumes greater than 50 gallons (190 L), gas-fired water heaters with storage volumes above 100 gallons (380 L), and electric water heaters with storage volumes above 120 gallons (450 L). As discussed in the following sections, DOE proposes to expand the scope of coverage of its test method so that it is applicable to all products that meet the definition of residential water heater, including those products listed above which are currently not addressed by the existing DOE test method. DOE is also revising 10 CFR 430.32(d) to clarify the applicability of the existing standards with respect to the expanded test procedure scope.

DOE's test procedures for commercial water heaters are found at 10 CFR 431.106. In terms of capacity, the procedures for commercial water heaters cover storage water heaters with an input rating up to 4,000 British thermal units (Btu) per hour (Btu/h) per gallon of stored water, instantaneous water heaters with input ratings not less than 4,000 Btu/h per gallon of stored water, and hot water supply boilers with input ratings from 300,000 Btu/h to 12,500,000 Btu/h and of at least 4,000 Btu/h per gallon of stored water. Units using natural gas, oil, or electricity are covered by these test methods.

EPCA includes definitions for both residential and commercial water heaters that set the scope of DOE's authority for these products. (42 U.S.C. 6291(27); 42 U.S.C. 6311(12)) As required by AEMTCA, DOE proposes to create a uniform metric and test method for all covered water heaters,[7] regardless of whether a particular water heater falls under the scope of residential water heaters or commercial water heaters as defined in EPCA. In doing so, DOE also proposes to expand the scope of the test procedure to include definitions and test methods for the types of products noted above that are not covered by DOE's residential test procedure. DOE identified these topics as issues for comment in the October 2011 RFI and the January 2013 RFI. 76 FR 63211, 63212–63213 (Oct. 12, 2011); 78 FR 2340, 2344–2346 (Jan. 11, 2013).

1. Coverage Range of Uniform Metric and Test Procedure

In the January 2013 RFI, DOE requested comment on whether the uniform efficiency descriptor required by AEMTCA should apply to all types of residential and commercial water heaters covered by EPCA, in addition to hot water supply boilers and unfired hot water storage tanks. In requesting comment, DOE acknowledged that AEMTCA provides for the possibility of an exclusion for certain water heaters from the uniform efficiency metric and accompanying test method. 78 FR 2340, 2345–46 (Jan. 11, 2013).

DOE received 7 comments that opposed DOE's tentative interpretation that AEMTCA requires the uniform descriptor to apply to all types of residential and commercial water heaters and indicated that DOE should utilize the statutory provision permitting an exclusion for any specific category of otherwise covered water heaters that do not have a residential use. (Bradford White, No. 30 at p. 2; AHRI, No. 33 at p. 1; AO Smith, No. 34 at p. 1; Joint comment, No. 35 at p. 2; NEEA, No. 37 at p. 2; Rheem, No. 38 at p. 2; HTP, No. 41 at p. 1)[8] Bradford White recommended that the uniform efficiency descriptor be limited to water heaters with inputs less than 200,000 Btu/h, which would cover those water heaters intended for residential applications. (Bradford White, No. 30 at p. 2) AHRI, AO Smith, Rheem, and HTP indicated that the legislation was intended to apply to residential products only and that development of a uniform metric and test method for all water heaters is not realistic given the substantially different duty cycles between water heaters meant for commercial applications and those meant for residential applications. (AHRI, No. 33 at pp. 1–2; AO Smith, No. 34 at p. 1; Rheem, No. 38 at p. 2; HTP, No. 41 at p. 1) The joint commenters supported a realignment of the scope that includes all water heaters except those clearly designed to deliver large amounts of hot water. (Joint comment, No. 35 at p. 2) NEEA recommended that DOE should focus on water heaters

[6] ACEEE submitted a joint comment on behalf of ACEEE, the Appliance Standards Awareness Project (ASAP), the National Consumer Law Center (NCLC), the Natural Resources Defense Council (NRDC), the Northeast Energy Efficiency Partnerships (NEEP), and the Northwest Power and Conservation Council (NPCC).

[7] As provided by 42 U.S.C. 6295(e)(5)(F), DOE is proposing to allow for the exclusion from the uniform efficiency descriptor of certain commercial water heaters that do not have a residential use and can be clearly described in the final rule and are effectively rated using the thermal efficiency and standby loss descriptors. The water heaters that DOE is proposing to exclude are discussed further in section III.A.1.

[8] All references to comments received in response to the October 2011 and January 2013 RFI's identify the commenter, the identification number applied by DOE, and the page of the comment package on which the particular point has been discussed.

meant for residential and small commercial applications. (NEEA, No. 37 at p. 2) No commenters supported DOE's tentative interpretation that AEMTCA requires the uniform descriptor to apply to all types of residential and commercial water heaters.

After considering the comments received, DOE proposes to exclude from the uniform efficiency descriptor any specific category of water heater that does not have a residential use. As noted above, AEMTCA provides that DOE can exclude from the uniform descriptor any specific categories of covered water heaters that do not have a residential use, can be clearly described in the final rule, and are effectively rated using the current thermal efficiency and standby loss descriptors. (42 U.S.C. 6295(e)(5)(F)) DOE received 13 comments regarding how to define water heaters that do not have a residential application. In light of these comments, DOE proposes to define a new classification of commercial water heaters for which the uniform efficiency descriptor would apply (*i.e.,* ''light commercial water heaters''), which DOE believes can be clearly distinguished from the commercial water heaters for which the uniform descriptor would not apply under this proposal. DOE believes that the current metrics for commercial water heaters that are used only in commercial settings are appropriate and adequate to characterize the performance of such commercial water heaters. Commercial water heaters typically cycle less than residential water heaters due to longer run-times followed by standby periods. (Residential water heaters are typically subject to a number of small draws and short on-times throughout the day.) As a result, cycling losses of water heaters used in commercial applications are generally not as significant as those used in residential applications. Thus, DOE believes that thermal efficiency and standby loss metrics adequately characterize the efficiency in active and standby modes, respectively.

AHRI, AO Smith, and HTP suggested that the following characteristics may be suitable to distinguish water heaters intended for non-residential use: (1) Designed to deliver water at a thermostatically controlled temperature of 180 °F or more; (2) bear a Code Symbol Stamp signifying compliance with the requirements of the American Society of Mechanical Engineers (ASME) Boiler and Pressure Vessel Code; and (3) require electricity as the primary energy source and require the use of 3-phase external supply. (AHRI, No. 33 at p. 2; AO Smith, No. 34 at p. 1; HTP, No. 41 at p. 2) The joint commenters likewise stated that water heaters utilizing 3-phase electric power, designed to deliver water above 180 °F, and falling under the guise of the ASME pressure vessel code are not typical of residential applications. (Joint comment, No. 35 at p. 2) NEEA commented that there are many water heaters with features that make them unsuitable for residential and small commercial applications and provided examples of units with set points of 180 °F or higher, 3-phase power, and large input ratings and volumes. (NEEA, No. 37 at p. 2) AHRI, AO Smith, Rheem, and HTP also provided tables of rated inputs and storage volumes to distinguish water heaters that are not intended for residential applications. (AHRI, No. 33 at p. 2; AO Smith, No. 34 at p. 1; Rheem, No. 38 at p. 2; HTP, No. 41 at p. 2) Those limits are grouped by water heater type and are shown in Table III.1.

TABLE III.1—SUGGESTED CAPACITY LIMITATIONS FOR DEFINING NON-RESIDENTIAL WATER HEATERS

Water heater type	Indicator of non-residential application by commenter
Gas-fired storage	AHRI, Rheem: Rated input >100 kBtu/h; Rated storage volume <20 gallons and >100 gallons. AO Smith: Rated Input > 100kBtu/h; Rated storage volume >100 gallons. HTP: Rated input >150 kBtu/h; Rated storage volume <20 gallons and >120 gallons.
Oil-fired storage	AHRI, AO Smith, Rheem: Rated input >140 kBtu/h; Rated storage volume >50 gallons.
Electric storage	AHRI, Rheem, HTP: Rated input >12 kW; Rated storage volume <20 gallons and >120 gallons. AO Smith: Rated Input >12 kW; Rated storage volume >120 gallons.
Heat Pump with Storage	AHRI, AO Smith, Rheem, HTP: Rated current >24 Amperes; Rated voltage >250 V; Rated storage volume >120 gallons.
Gas-fired instantaneous	AHRI, AO Smith, Rheem, HTP: Rated input >200 kBtu/h; Water volume >1 gallon per 4000 Btu/h of input.
Electric instantaneous	AHRI, Rheem: Rated input >12 kW; Water volume >2 gallons. AO Smith: Rated input >25 kW; Water volume >2 gallons.
Oil-fired instantaneous	AHRI, Rheem, AO Smith: Rated input >210 kBtu/h; Water volume >2 gallons.

Bradford White recommended that the new descriptor be limited to water heaters with inputs less than 200,000 Btu/h because, according to the commenter, water heaters with inputs greater than or equal to 200,000 Btu/hr are not used in residential applications since such a high input is not required in these types of applications. (Bradford White, No. 30 at p. 2) AGA stated that efficiency descriptors and test methods are best developed through consensus-based processes and referred DOE to the scope that is currently present in ASHRAE Standard 118.2, *Method of Testing for Rating Residential Water Heaters.* (AGA, No. 31 at 2)

Upon considering these comments, DOE agrees with commenters that a unit requiring three-phase electricity would nearly always be used only in a commercial setting, as residential homes are wired almost exclusively for single-phase power. Likewise, DOE agrees with commenters that units with an ASME pressure vessel rating or units capable of delivering water at temperatures at or exceeding 180 °F would generally only be used in commercial settings. As a result, DOE proposes to use these three criteria as the basis for defining ''light commercial'' water heaters that have residential applications.

DOE also considered the input and storage capacity criteria proposed by stakeholders to differentiate commercial water heaters that would only be used in non-residential applications from commercial water heaters that could have residential applications. DOE notes that equipment that was once classified as residential based on input capacity or storage volume might now be installed in a commercial setting and vice versa. Given that such changes occur over time as new technologies develop, DOE is declining to propose criteria in this NOPR on an input capacity basis. Instead, DOE believes that the three criteria discussed in the preceding

paragraph are adequate to define the class of commercial water heaters that could have residential applications.

Consequently, DOE proposes to add the following definition of ''light commercial water heater'' to 10 CFR 431.102:

Light commercial water heater means any gas-fired, electric, or oil storage or instantaneous commercial water heater that meets the following conditions:

(1) For models requiring electricity, uses single-phase external power supply;

(2) Is not capable of delivering hot water at temperatures of 180 °F or above; and

(3) Does not bear a Code Symbol Stamp signifying compliance with the requirements of the ASME Boiler and Pressure Vessel Code.

Although light commercial water heaters could have residential applications, DOE notes that the new ''light commercial water heater'' definition represents a type of water heater that, to a significant extent, is distributed in commerce for industrial or commercial use. These water heaters were and continue to be covered industrial equipment, and, if these proposals are finalized, will continue to be subject to the regulations in part 431 and the certification requirements for commercial and industrial equipment in part 429. Similarly, although DOE recognizes that some consumer water heaters may be installed in a commercial setting, those waters heaters are covered consumer products for the purposes of DOE regulations, the regulations in part 430 continue to apply, and they must be certified as consumer products under part 429.

If a commercial water heater does not meet all of these three conditions, it would be classified as a commercial water heater that would not be expected to be used in residential applications and would be subject to the current test methods prescribed in 10 CFR 431.106, which reference ANSI Z21.10.3. If a commercial water heater meets all three criteria, DOE proposes to consider it a ''light commercial water heater,'' which would be subject to the uniform efficiency descriptor and test method proposed in today's NOPR. Accordingly, DOE proposes to add a row to Table 1 of 10 CFR 431.106 specifying 10 CFR part 430, subpart B, Appendix E as the test method for this class of equipment. DOE seeks comment on both the proposed definition of ''light commercial water heater'' and the proposal to subject this equipment to the test methods at Appendix E. This is identified as issue 1 in section V.E, ''Issues on Which DOE Seeks Comment.''

DOE also received comments recommending that certain types of water heaters should be excluded from the uniform descriptor for various reasons. NREL commented that storage tanks do not make a complete water heating system, so an energy factor is not appropriate. NREL elaborated that a rating using a standby loss coefficient could be appropriate. (NREL, No. 29 at pp. 3–4) AHRI, AO Smith, and HTP recommended that DOE exclude from the descriptor: (1) Unfired storage tanks because they do not actually heat water; (2) add-on heat pumps because DOE has previously determined that these are not covered products and they are not complete water heaters; and (3) hot water supply boilers because, by definition, they have inputs exceeding the values listed in the commenters' recommendations and because these products are all subject to the requirements of the ASME Boiler and Pressure Vessel Code (AHRI, No. 33 at pp. 4–5; AO Smith, No. 34 at p. 3; HTP, No. 41 at p. 5) Rheem expressed support for AHRI's list of exclusions. (Rheem, No. 38 at p. 2) NEEA recommended that DOE should exclude water storage tanks from the uniform descriptor because they are technically not water heaters and they simply store water heated elsewhere. NEEA also commented that unfired storage tanks should not be excused from all efficiency requirements since standby loss efficiency is important for all hot water storage vessels, regardless of where and how the water is heated. (NEEA, No. 37 at p. 2) Conversely, the joint commenters recommended that the uniform efficiency descriptor should be able to effectively measure the efficiency of electric heat pump water heaters without an integrated storage tank in the event it is included in future Federal coverage. (Joint comment, No. 35 at p. 5)

DOE has tentatively determined that certain commercial equipment such as unfired storage tanks and add-on heat pump water heaters are not appropriately rated using the uniform descriptor applicable to other water heaters. Unfired storage tanks are not complete water-heating systems and require additional equipment in the field to operate. Thus, DOE believes that other metrics may be more appropriate for these devices with limited functionality compared to actual water heaters, and that their performance as part of a complete water-heating system is so dependent upon other components of the system that use of the uniform descriptor may be unrepresentative of its performance as a system. For add-on heat pump water heaters, DOE agrees with stakeholders that DOE has previously determined that these are not covered residential products. As such, DOE only has authority to cover commercial add-on heat pumps; however, this equipment does not have residential applications, and, therefore, is not suitable for inclusion in the uniform efficiency descriptor. DOE has also tentatively determined that hot water supply boilers are more appropriately rated using the existing metrics for commercial water heaters, as this equipment has very high input ratings and are subject to the ASME Boiler and Pressure Vessel Code, and their use is similar to that of other commercial water heaters in commercial applications. DOE will address the types of water-heating equipment that are excluded from the uniform descriptor (*e.g.,* unfired storage tanks, add-on heat pump water heaters, and hot water supply boilers) in a subsequent test procedure rulemaking.

2. Storage Capacity Limits

Under the existing regulatory definitions, DOE's current residential water heater test procedures are not applicable to gas or electric water heaters with storage tanks that are at or above 2 gallons (7.6 L) and less than 20 gallons (76 L). In terms of the high end of the capacity range, the current DOE test procedure for residential water heaters only applies to gas-fired water heaters with storage volumes less than or equal to 100 gallons (380 L), electric resistance and heat pump storage water heaters with storage volumes less than or equal to 120 gallons (450 L), and oil-fired water heaters with storage volumes less than or equal to 50 gallons (190 L). 10 CFR part 430, subpart B, appendix E, sections 1.12.1, 1.12.2, and 1.12.4.

In the 1998 rulemaking establishing test procedures for residential water heaters, DOE proposed to include units with storage volumes between 2 and 20 gallons, but commenters raised concerns that the test procedure demand of 64.3 gallons per day was not appropriate for these small units. 63 FR 25996, 26000 (May 11, 1998). At that time, DOE concluded that the data to determine the appropriate daily hot water consumption did not exist and that alternative procedures proposed by commenters were not fully evaluated. For these reasons, the Department tabled consideration of the inclusion of these water heaters until a future revision of the DOE test procedure. In recent years, however, water heaters with such capacities have begun to populate the market. The definitions in

the DOE test procedure (cited above) specify that instantaneous-type water heaters have a storage volume of less than two gallons (7.6 L) and that electric or gas storage-type water heaters have a storage volume of 20 gallons (76 L) or more. The storage capacity of oil water heaters in the test method is not restricted by a lower limit, with the specification stating that an oil-fired storage water heater simply has a rated capacity less than or equal to 50 gallons (190 L). 10 CFR part 430, subpart B, appendix E, sections 1.7 and 1.12. The definition for ''Storage-type Water Heater of More than 2 Gallons (7.6 Liters) and Less than 20 Gallons (76 Liters)'' is currently reserved. *Id.* at section 1.12.5. DOE requested comment on the potential to address this gap in the October 2011 RFI, and received several comments from interested parties. 76 FR 63211, 63213 (Oct. 12, 2011).

DOE received 11 comments in support of the inclusion of water heaters with storage volumes between 2 and 20 gallons. (Bradford White, No. 2 at p. 1; PGE, No. 3 at p. 1; SCE, No. 4 at p. 1; Stone Mountain Technologies, No. 5 at p. 2; AO Smith, No. 8 at p. 1; NEEA, No. 9 at p. 2; AHRI, No. 12 at p. 1; NREL, No. 14 at p. 7; NRDC, No. 20 at p. 1; AET, No. 22 at p. 7; ACEEE, No. 24 at pp. 3–4). No comments were received opposed to this measure.

AHRI, AO Smith, Bradford White, and Lochinvar suggested that a distinct test procedure is needed for electric storage water heaters with volumes between 2 and 20 gallons since the current test method is not suited for such point-of-use products and that this test method measure only the standby loss of the unit. (Bradford White, No. 2 at p. 1; AO Smith, No. 8 at p.1; Lochinvar, No. 10 at p. 1; AHRI, No. 12 at p. 2) Stone Mountain Technologies stated further that all electric resistance water heaters should be subjected to only a standby loss test, because differences between models is almost solely based on standby losses. (Stone Mountain Technologies, No. 5 at p. 3) DOE has considered these points but has tentatively concluded that, for equity across water-heating technologies, all water heaters should be tested under a simulated-use profile as will be discussed in section III.C. DOE proposes a profile that is appropriate for point-of-use water heaters, so any concerns that the current test method is not suitable are addressed by the proposed test method. This profile will simulate the way that a point-of-use water heater is used in the field and will capture any operational characteristics that could affect its efficiency. DOE also believes that a simulated-use test will better capture any potential cycling losses or inefficiencies in meeting the demands imposed on all water heaters.

After considering the comments received, DOE proposes to expand the scope of the water heater test procedure for the uniform efficiency descriptor to include water heaters with storage volumes between 2 and 20 gallons. The proposed modifications will specify the method of test set-up (including instrumenting such water heaters), a test method to assess the delivery capacity, and the draw pattern that would be used to determine the energy efficiency of such units. The proposed amendments for water heaters with storage volumes between 2 and 20 gallons are discussed in detail in section III.C of today's notice of proposed rulemaking.

DOE is not aware of any residential water heaters available on the market with storage volumes above 100 gallons, 120 gallons, and 50 gallons for gas-fired, electric (resistance and heat pump), and oil-fired water heaters, respectively, that would be covered as residential products under EPCA. Due to the lack of water heaters with very large storage volumes that meet the definition of a residential ''water heater,'' DOE tentatively concluded in the October 2011 RFI that it is unnecessary to expand the scope of the test procedure to include gas-fired products over 100 gallons, electric products over 120 gallons, or oil-fired products over 50 gallons, and requested comment on this tentative conclusion. 76 FR 63211, 63213 (Oct. 12, 2011).

Four commenters (Bradford White, AO Smith, NEEA, AHRI) supported DOE's position to maintain the existing capacity limits for storage water heaters, while three commenters (Stone Mountain Technologies, NREL, AET) recommended that the test method be expanded to include all water heaters with storage volumes from 0 to 120 gallons. (Bradford White, No. 2 at p. 1; AO Smith, No. 8 at p. 1; NEEA, No. 9 at p. 2; AHRI, No. 12 at p. 1; Stone Mountain Technologies, No. 5 at p. 2; NREL, No. 14 at p. 8; AET, No. 22 at pp. 6–7) AET noted that the pressure vessel code from the American Society of Mechanical Engineers requires that vessels intended to store fluids under pressure must individually undergo a rigorous test and inspection procedure if they have volumes greater than 120 gallons. AET noted that because these test and certification procedures are expensive, manufacturers will avoid making products intended for residential use that require an ASME inspection and code stamp. For this reason, AET commented that the upper limit of 120 gallons would be appropriate for all residential water heaters. AET further suggests that expanding the volume limit to 120 gallons would prevent manufacturers from evading efficiency standards by marketing water heaters slightly larger than the currently specified limits. (AET, No. 22 at pp. 6–7)

The subsequent passage of AEMTCA has necessitated that DOE reconsider the scope of all water heater test procedures. DOE has considered these comments, as well as the provisions of AEMTCA, and proposes to expand the scope of the test procedure to include all covered water heaters that could have residential applications and remove the limitations on maximum storage volume that are currently in the residential test procedure for gas-fired, electric, and oil storage water heaters. The Department's authority to regulate water heaters is limited to those explicitly defined as covered products by EPCA. EPCA defines the term ''water heater'' as a product which utilizes oil, gas, or electricity to heat potable water for use outside the heater upon demand. (42 U.S.C. 6291(27)) Further, EPCA defines storage type units which include gas storage water heaters with an input of 75,000 Btu per hour or less, oil storage water heaters with an input of 105,000 Btu per hour or less, and electric storage water heaters with an input of 12 kilowatts or less. EPCA also defines instantaneous type units, which are water heaters that contain no more than one gallon of water per 4,000 Btu per hour of input, including gas instantaneous water heaters with an input of 200,000 Btu per hour or less, oil instantaneous water heaters with an input of 210,000 Btu per hour or less, and electric instantaneous water heaters with an input of 12 kilowatts or less. Lastly, EPCA defines covered heat pump type units, which have a maximum current rating of 24 amperes at a voltage no greater than 250 volts, and which are designed to transfer thermal energy from one temperature level to a higher temperature level for the purpose of heating water, and include all ancillary equipment such as fans, storage tanks, pumps, or controls necessary for the device to perform its function. Id.

For commercial water heating equipment, EPCA defines ''storage water heater'' as a water heater that heats and stores water within the appliance at a thermostatically controlled temperature for delivery on demand, and does not include units with an input rating of 4000 Btu per hour or more per gallon of stored water. EPCA also defines ''instantaneous water heater'' as a water

heater that has an input rating of at least 4000 Btu per hour per gallon of stored water. Lastly, EPCA defines the term ''unfired hot water storage tank'' as a tank used to store water that is heated externally. (42 U.S.C. 6311(12))

AEMTCA requires that the new metric apply to the extent possible to all water-heating technologies used in residential applications. (42 U.S.C. 6295(e)(5)(F) and (H)) DOE believes that the test method proposed in today's NOPR adequately addresses large water heaters regardless of storage volume, provided that they are used in residential applications. As noted previously in section III.A.1, DOE proposes to exclude units used only in non-residential applications, but DOE does not believe that storage volume alone would dictate whether a unit is residential or commercial. As noted by AET, the ASME pressure vessel code requires that vessels intended to store fluids under pressure must undergo a rigorous test and inspection procedure if they have volumes greater than 120 gallons. Any such products would be ASME pressure vessel rated, and under the definition of ''light commercial water heater'' proposed in section III.A.1, would not be subject to the uniform efficiency descriptor, which would effectively limit the maximum storage volume to 120 gallons for the purposes of using the uniform descriptor. For these reasons, DOE proposes to eliminate the maximum storage volume limitations from the residential water heater test procedure.

3. Input Capacity Limits

DOE's current residential water heater test procedure is not applicable to gas-fired instantaneous water heaters with input capacities at or below 50,000 Btu/h or at or above 200,000 Btu/h. 10 CFR Part 430, subpart B, Appendix E, section 1.7.2. In addition, the test procedure is not applicable to gas-fired storage water heaters with input capacities above 75,000 Btu/h, electric storage water heaters with input ratings above 12 kW, and oil-fired storage water heaters with input ratings above 105,000 Btu/h. 10 CFR Part 430, subpart B, Appnedix E, section 1.12.

DOE proposes to eliminate the minimum limit on the firing rate of instantaneous gas water heaters of 50,000 Btu/h, as AEMTCA requires that the new metric apply to the maximum extent practical to all water-heating technologies intended for residential application. (42 U.S.C. 6295(e)(5)(F) and (H)) As discussed in section III.C, DOE proposes to adopt multiple draw patterns that would vary based on the delivery capacity of the water heater. Because the draw pattern would be dependent upon delivery capacity, DOE believes that small gas-fired instantaneous units could be appropriately tested under the proposed procedure. Thus, DOE believes there is no reason to retain this lower limit on gas-fired instantaneous water heater delivery capacity.

Similarly, DOE proposes to remove the maximum input ratings for gas-fired, electric, and oil-fired storage water heaters, and for gas-fired instantaneous water heaters from the test procedure. DOE believes that the proposed test procedure, because it varies based on delivery capacity, is applicable to units with input capacities above those included in the current residential water heater test procedure. Although these maximum input limitations were based upon DOE's ''water heater'' definition at 42 U.S.C. 6291(27), because AEMTCA requires that the new metric apply to all water-heating technologies except those that do not have a residential use, DOE believes that such limits are no longer controlling or appropriate in terms of the scope of the water heaters test procedure. As discussed in section III.A.1, given the technology shifts that occur over time, DOE does not believe input capacity limitations to be a consistent indicator of whether a product has a residential use.

4. Electric Instantaneous Water Heaters

DOE's current test procedures do not contain a definition for ''electric instantaneous water heater,'' but rather have a space reserved to define that term. 10 CFR Part 430, subpart B, appendix E, section 1.7.1. EPCA defines ''electric instantaneous water heater'' as having an input capacity of 12 kilowatts (kW) or less. (42 U.S.C. 6291(27)(B)) As noted by commenters and discussed in section III.A.1, the heating power required for electric instantaneous water heaters intended for whole-home applications is typically much higher than the power capability commonly found in storage-type electric water heaters. Given the emergence of electric instantaneous water heaters on the market, DOE requested comment in the October 2011 RFI on addressing this gap in the test procedure by prescribing a definition specifically for the term ''electric instantaneous water heater.'' DOE noted in the RFI that although the 24-hour simulated use test in DOE's test procedure for instantaneous water heaters at 10 CFR Part 430, subpart B, appendix E, section 5.2.4 is titled ''24-hour Simulated Use Test for Gas Instantaneous Water Heaters,'' the method is also applicable for electric instantaneous water heaters. DOE requested comment on potential modifications to the DOE test procedure to address electric instantaneous water heaters.

DOE received thirteen comments in support of the proposal to amend DOE's water heater test procedure to include electric instantaneous water heaters. (Bradford White, No. 2 at p. 1; PGE, No. 3 at p. 1; SCE, No. 4 at p. 1; Stone Mountain Technologies, No. 5 at p. 2; AO Smith, No. 8 at p. 1; NEEA, No. 9 at p. 2; Lochinvar, No. 10 at p. 1; AHRI, No. 12 at p. 1; NREL, No. 14 at p. 9; NRDC, No. 20 at p. 1; Bosch, No. 17 at p. 1; AET, No. 22 at pp. 8–9; and ACEEE, No. 24 at p. 4.) DOE received no comments opposing such an inclusion. Bradford White, AO Smith, AHRI, NREL, AET, and ACEEE also suggested that the test procedure should be amended to cover electric instantaneous water heaters with heating rates higher than 12 kW in order to accommodate units that are meant to serve whole-home applications. (Bradford White, No. 2 at p. 1; AO Smith, No. 8 at p. 1; AHRI, No. 12 at p. 2; NREL, No. 14 at p. 9; AET, No. 22 at pp. 8–9; ACEEE, No. 24 at p. 4) AHRI and ACEEE suggested that the test procedure for electric instantaneous water heaters should be made applicable to water heaters with inputs up to 25 kW (AHRI, No. 12 at p. 2; ACEEE, No. 24 at p. 4), while Bradford White suggested an input limit of 35 kW (Bradford White, No. 2 at p. 1), and NREL recommended an input limit of 50 kW (NREL, No. 14 at p. 9). AET commented that the upper limit be based on a maximum current of 200 Amperes, which is the typical maximum value allowed in residences in the United States. (AET, No. 22 at pp. 8–9) In response to the January 2013 RFI, Aquarensics, UHCL1, UHCL2, and Seisco commented that the test method should cover electric instantaneous water heaters with input ratings in excess of 12 kW. (Aquarensics, No. 43 at p.1; UHCL1, No. 44 at p. 1; UHCL2, No. 45 at p. 1; Seisco, No. 47 at p. 1) Further, Aquarensics, UHCL1, UHCL2, and Seisco all commented that commercially-available electric instantaneous water heaters that are designed for residential applications have input ratings greater than the current limit of 12 kW for residential electric water heaters under EPCA. (Aquarensics, No. 43 at p. 2; UHCL1, No. 44 at p. 1; UHCL2, No. 45 at p. 1; Seisco, No. 47 at p. 3) Aquarensics and UHCL2 noted residential applications that used units with an input rating of 28 kW. UHCL1 commented that whole-house instantaneous water heaters typically require 25 kW to 35 kW.

Seisco stated that residential electric instantaneous water heaters having inputs above 30 kW are commonly built and have been used for residential applications since 1999. Seisco further stated that electric instantaneous water heaters with input ratings up to 35 kW are used for whole-house applications.

After considering the comments on the RFIs, DOE proposes to amend its water heaters test procedure to include applicable provisions for electric instantaneous water heaters, and to define the term ''electric instantaneous water heater'' as follows:

Electric Instantaneous Water Heater means a water heater that uses electricity as the energy source, initiates heating based on sensing water flow, is designed to deliver water at a controlled temperature of less than 180 °F (82 °C), and has a manufacturer's specified storage capacity of less than 2 gallons (7.6 liters). The unit may use a fixed or variable power input.

DOE notes that the proposed definition would encompass both electric instantaneous water heaters that are residential (*i.e.,* with an input capacity of 12 kW or less) and commercial (*i.e.,* with an input capacity greater than 12 kW). Because water heaters both above and below 12 kW have residential applications, both types would be covered by the uniform efficiency descriptor. Today's proposed rule provides for a maximum flow rate test, as well as a test to obtain the energy efficiency expressed in terms of Energy Factor (EF). These tests are identical to those implemented for gas instantaneous water heaters.

B. Uniform Efficiency Descriptor

AEMTCA provided the following options for the uniform efficiency descriptor metric: (1) A revised version of the energy factor descriptor currently in use; (2) the thermal efficiency and standby loss descriptors currently in use; (3) a revised version of the thermal efficiency and standby loss descriptors; (4) a hybrid of descriptors; or (5) a new approach. (42 U.S.C. 6295(e)(5)(G)) In the January 2013 RFI, DOE requested comment on the appropriate metric to be used as the uniform descriptor. 78 FR 2340, 2344–45 (Jan. 11, 2013). Eight parties provided comments supporting the use of the energy factor metric, but obtained using a different method of test than provided in the current test procedure. (NREL, No. 29 at p. 1; Bradford White, No. 30 at p. 1; AHRI, No. 33 at p. 3; AO Smith, No. 34 at p. 2; GE, No. 36 at p. 1; NEEA, No. 37 at p. 1; Rheem, No. 38 at p. 3; HTP, No. 41 at p. 3) The joint comment indicated that the existing energy factor metric is inadequate and indicated support for a series of simulated use tests that would result in a revised energy factor. (Joint comment, No. 35 at p. 1) No comments were received that proposed the use of thermal efficiency, standby loss factor, or any new metrics.

NREL stated that the thermal efficiency and standby loss metrics are not suitable as primary metrics for residential applications, because they do not completely capture performance. (NREL, No. 29 at p. 1) AHRI and HTP indicated that the energy factor metric would enable testing agencies to build on prior experience in testing water heaters for residential applications, that it would result in an easier conversion from the current metric to the uniform descriptor, and that it can be technology neutral. (AHRI, No. 33 at pp. 3–4; HTP, No. 41 at p. 3) HTP also suggested a voluntary rating for combined water-heating and space-heating appliances based on ASHRAE Standard 124, *Methods of Testing for Rating Combination Space-Heating and Water-Heating Appliances.* (HTP, No. 41 at p. 4) AO Smith suggested that the uniform descriptor be given a qualifying name to distinguish it from the current energy factor, providing ''New Energy Factor'' as an example. (AO Smith, No. 34 at p. 2) GE indicated that an energy factor metric would be technology neutral and that it would minimize complexity in converting from the current metric to the uniform descriptor. (GE, No. 36 at p. 1)

NRCan provided a report documenting results of testing of two commercial water heaters that are marketed towards the residential sector under the existing residential test procedure. (NRCan, No. 42 at p. 1) The report did not identify any problems or concerns with testing these units under the existing test procedure.

Based on these comments, DOE proposes a modified version of the existing energy factor metric as the uniform descriptor for products covered under this test procedure. DOE believes that an energy factor that is derived from a simulated use test will provide a technology-neutral metric for the efficiency of water heaters intended for residential applications. The simulated use test will capture key performance aspects such as burner efficiency, standby loss, and cycling that affect energy efficiency seen by consumers. However, DOE will not adopt voluntary rating requirements for combination appliances at this time, as that is outside the scope of today's test procedure NOPR. Further, DOE does not plan to change the name, as suggested by A.O. Smith. The Department believes that because standards and ratings will be transitioned to the new metric and the old metric will be come obsolete, there will be little confusion by maintaining the name ''energy factor.''

C. Draw Pattern

The term ''draw pattern'' describes the number, flow rate, length, and timing of hot water removal from the water heater during testing. Primary decisions in developing draw patterns include the total amount of water to be removed during the test and the number of draws during the test. The total amount of water taken in each draw, which is a function of the flow rate and the length of the draw, must also be specified. Finally, the spacing between those draws is needed to complete the specification of the draw pattern.

The current residential water heater test procedure includes a 24-hour simulated-use test for determining energy factor. 10 CFR Part 430, subpart B, appendix E, sections 5.1.5 and 5.2.4. The 24-hour test specifies that 6 draws of equal volume be removed from the water heater in the first 6 hours of the test for a total draw of 64.3 ± 1.0 gallons (243.4 ± 3.8 L).[9] Following the six draws, the water heater sits in an idle mode for the remainder of the 24-hour test. *Id.* The draw pattern is the same regardless of the type (e.g., gas-fired, electric resistance, oil-fired, heat pump, storage, instantaneous) and characteristics (*e.g.,* storage volume, input capacity) of the water heater.

In the October 2011 RFI, DOE noted that recent data [10] [11] [12] suggest that the draw pattern can impact the energy factor of a water heater and can potentially offer an advantage to one type of water heater technology over another. 76 FR 63211, 63213 (Oct. 12, 2011). These studies also suggest that the existing draw pattern in the simulated use test may not be

[9] 10 CFR Part 430, subpart B, appendix E, section 5.1.5 currently states, ''During the simulated use test, a total of 64. ±3 1.0 gallons (243 ± 2.8 liters) shall be removed.'' DOE contends that the total is in error and should instead read ''64.3 ± 1.0 gallons (243 ± 2.8 liters).'' No correction is proposed at this time since the quantity will change in the proposed test procedure.

[10] Healy, WM, Ullah, T, and Roller, J., ''Input-Output Approach to Predicting the Energy Efficiency of Residential Water Heaters—Testing of Gas Tankless and Electric Storage Water Heaters,'' ASHRAE Transactions 117 (2011).

[11] Hoeschele, M.A. and Springer, D.A., ''Field and Laboratory Testing of Gas Tankless Water Heater Performance,'' *ASHRAE Transactions* 114 (2): 453–461 (2008).

[12] Bohac, D, Schoenbauer, B., Hewett, M., Lobenstein, M.S., Butcher, T. ''Actual Savings and Performance of Natural Gas Tankless Water Heaters,'' Center for Energy and Environment Report for Minnesota Office of Energy Security (August 30, 2010).

representative of actual draw patterns to which water heaters are subjected in the field. Because different water heaters will be subjected to different field demands (consumer usage patterns) due to operational or performance differences, DOE proposes to revise the draw pattern to be more representative of typical usage patterns experienced in the field. DOE is also proposing to amend its test procedure to provide for different draw patterns for different water heaters based upon the characteristics of each water heater, such as the rate of hot water the unit can provide, the storage volume, and the heating rate (*i.e.,* input rate). In the October 2011 RFI, DOE sought comment on improvements that could be made to DOE's existing 24-hour simulated use test procedure for water heaters. Additional comments were sought by and provided in response to the January 2013 RFI.

DOE received 27 comments that addressed these issues. Four commenters (AGA, Bosch, General Electric, and Rheem) recommended that DOE maintain the test procedure as it currently stands. AGA argued the importance of consistency with previous ratings. (AGA, No. 13 at p. 1) Bosch commented that the current test procedure covers a large quantity of applications without trying to estimate the usage for any given household. (Bosch, No. 17 at p. 2) General Electric wrote that the six-draw requirement is appropriate for medium-volume water heaters. (GE, No. 21 at pp. 1–2) Rheem suggested that the added scope of covered products called for by AEMTCA would best be handled by maintaining the existing residential water heater test procedure at this time while continuing to pursue an amended test method. (Rheem, No. 38 at p. 3) Rheem further argued that such an incremental approach would allow manufacturers to continue on a path to meet minimum efficiency requirements imposed by amended energy conservation standards.

In total, DOE received twenty-three comments recommending that the Agency move away from the six-draw requirement as currently specified in the DOE test procedure (although certain of these comments were multiple submissions from the same interested party). (Bradford White, No. 2 at p. 2; PGE, No. 3 at p. 2; SCE, No. 4 at p. 2; Stone Mountain Technologies, No. 5 at p. 2; AO Smith, No. 8 at p. 2; NEEA, No. 9 at p. 2; NPGA, No. 11 at pp. 1–2; AHRI, No. 12 at p. 2; NREL, No. 14 at pp. 1–2; GTI, No. 15 at p. 2; NRCan, No. 16 at pp. 1–2; NRDC, No. 20 at p. 2; AET, No. 22 at p. 2; ACEEE, No. 24 at p. 1; NREL, No. 29 at p. 2; Bradford White, No. 30 at p. 2; AHRI, No. 33 at p. 4; AO Smith, No. 34 at p. 3; Joint comment, No. 35 at p. 1; GE, No. 36 at p. 1; NEEA, No. 37 at p. 3; APGA, No. 39 at p. 2; AHRI, No. 46 at p. 1)

Bradford White indicated its support for a 24-hour simulated use test because it is ''technology blind.'' (Bradford White, No. 2 at p. 2) PGE and SCE recommended that the draw pattern be modified to reduce bias towards tankless water heaters, and that different draw patterns be applied based on the capacity of the water heater. (PGE, No. 3 at p. 2; SCE, No. 4 at p. 2) Stone Mountain Technologies indicated that recent studies have shown that the efficiency of most gas-fired tankless models is overstated using the current DOE test procedure. The commenter stated that this finding, along with the addition of small water heaters within the scope of the test procedure, necessitate a modification to the current draw pattern. Further, Stone Mountain Technologies opined that an appropriate number of draws for a practical test method would be between 10 and 15. (Stone Mountain Technologies, No. 5 at p. 2) AO Smith and AHRI supported revising the test procedure while retaining the simulated-use concept and indicated that an AHRI industry effort is underway to develop a modified draw pattern. (AO Smith, No. 8 at p. 2; AHRI, No. 12 at p. 2; AHRI, No. 33 at p. 4; AO Smith, No. 34 at p. 3) AHRI submitted a proposed revised energy factor test method to DOE, which was considered for today's NOPR and is discussed below. (AHRI, No. 46, pp. 1–7) NEEA stated that it is clear that the draw pattern used in the current test procedure bears no resemblance to that seen in actual use, and accordingly, the current draw pattern should be abandoned. (NEEA, No. 9 at p. 2) NREL commented that the draw patterns in the new test must be statistically representative of actual usage, meaning that the frequency distributions of key variables in the test procedure (such as volume of draws and timing between draws) are reasonably matched to field data. Furthermore, it commented that DOE should ensure that any proposed test draw profile must be consistent with all relevant statistical distributions determined from the database of hot water draws created by the Lawrence Berkeley National Laboratory (LBNL). (NREL, No. 14 at pp. 1–2, 8) NREL also mentioned the efforts underway by ASHRAE to develop a test method based on multiple draw patterns that have different total draw volumes that are appropriate for water heaters of different sizes. (NREL, No. 29 at p. 2) NEEA likewise discussed these efforts by ASHRAE. (NEEA, No. 27 at p. 2)

GTI discussed the effect of a greater number of draws during the test on the efficiency rating of instantaneous water heaters, and presented data on estimated energy factors and efficiencies under different draw patterns. (GTI, No. 15 at pp. 6–9) NRCan discussed changes being proposed to the committee responsible for Canadian Standards Association (CSA) P.3—*Testing Method for Measuring Energy Consumption and Determining Efficiencies of Gas-Fired Storage Water Heaters.* The committee is considering changing the current draw pattern and replacing it with a new pattern of 10 to 15 draws spread throughout the day, with the volume and time of each draw varying. NRCan also provided data from a field study in Ontario that included information on hot water draw patterns. (NRCan, No. 16 at p. 2) NRDC urged DOE to examine the existing data on draw patterns and to conduct its own further testing if necessary. (NRDC, No. 20 at p. 2) AET commented that the draw patterns need to be more realistic in terms of the number of repeated small draws and that it is important for tank-type, instantaneous, and tankless water heaters to all be rated using the same draw patterns for a given capability range, because comparisons among them will otherwise have little meaning. (AET, No. 22 at p. 2) ACEEE commented that the current draw pattern is no longer adequate for generating the information that consumers need to make wise purchasing decisions. In ACEEE's view, the six-draw test does not reflect patterns seen in field studies and that the current six-draw pattern is inadequate, primarily because different technologies that may lead to the same energy use in typical applications would get quite different EF ratings in the lab. (ACEEE, No. 24 at p. 1) Standards Committee 118.2 of ASHRAE submitted minutes from a meeting held on June 28, 2011, indicating that the committee passed motions to develop new draw patterns for a simulated-use test. (ASHRAE, No. 25 at pp. 1–2)

Fifteen commenters supported the implementation of different draw patterns based upon water heater capacities. Bradford White proposed three different draw patterns that would be applicable to water heaters of low use, normal-to-high use, and heavy-duty use. (Bradford White, No. 2 at pp. 5–6; Bradford White, No. 30 at pp. 13–15) PGE and SCE recommended that DOE prescribe draw patterns based on ranges of capacities of units or based upon burner size for tankless units. (PGE, No.

3 at p. 2; SCE, No. 4 at p. 2) Stone Mountain Technologies stated that the flow rate during individual draws and the total volume drawn during the test should be based on the hot water delivery capacity of the model. Furthermore, Stone Mountain Technologies suggested that the capacity should be based on the theoretical volume of hot water that can be delivered in 15 minutes using the energy storage and the net heat input. (Stone Mountain Technologies, No. 5 at p. 2) AHRI and AO Smith recommended that DOE should develop a simulated-use test that will vary for differing models based on some specified criterion such as storage volume or flow rate or other appropriate characteristic. (AHRI, No. 12 at p. 2; AO Smith, No. 8 at p. 2) NEEA indicated that its own laboratory testing and that of some others suggest that multiple draw patterns (perhaps 3 to 5) would be appropriate, depending on the capacity of the water heater. (NEEA, No. 9 at p. 2) NRCan indicated that the CSA P.3 committee is considering 3 or 4 categories for daily hot water use households: Low, medium, high, and, potentially, a point-of-use category. The water heaters would be categorized by first-hour rating, maximum gallons per minute, or maximum heat input. (NRCan, No. 16 at p. 2) General Electric commented that the draw pattern should be proportionately scaled up for large volume water heaters (greater than 50 gallon capacity) and, similarly, scaled down for smaller water heaters (less than 50 gallons). (GE, No. 21 at p. 2) ACEEE stated that DOE must use different draw patterns for water heaters of different capacities and suggested that manufacturers should be allowed to choose how a particular product is rated. (ACEEE, No. 24 at p. 2) In response to the January 2013 RFI, the joint commenters recommended 5 different draw patterns for sizes ranging from point-of-use to very high use household/light commercial. The joint commenters noted work by LBNL and Stone Mountain Technologies in devising a capacity rating based on published storage volume and heat source size. (Joint comment, No. 35 at p. 2) GE commented that water heaters should be tested based on their capacity as measured by the first-hour rating. (GE, No. 36 at p. 1)

AHRI provided a suggested simulated use test that described four different draw patterns that would be applied to a water heater based on its first-hour rating or maximum flow rate measurement. (AHRI, No. 46 at pp. 5–6) As explained below, AHRI suggested cut-offs between the four different size categories at first-hour ratings of 20, 55, and 80 gallons and at maximum flow rates of 1.5, 2.5, and 3.5 gallons per minute; all values correspond to a nominal outlet temperature of 135 °F and a nominal inlet temperature of 58 °F. The draw patterns are based on a set of activities that would be expected in a typical residence, with the total volume removed per day for the four patterns being 15, 40, 64.2, and 82.75 gallons. The draw pattern for point-of-use water heaters involved 11 draws, while the other three draw patterns involved 12 draws each. Flow rates varied for each draw during the draw pattern, except for the point-of-use draw pattern which imposed a fixed flow rate of 1 gallon per minute throughout the test.

Applied Energy Technology acknowledged the need to test a water heater according to a draw pattern appropriate for its delivery capacity, but instead of supporting a suite of tests for water heaters of different capacity, it recommended that DOE consider a test approach applicable to water heaters of all sizes from which pieces of information are obtained pertaining to the particular capacity of the water heater under test. AET's suggested test method entails a series of draw clusters that simulate different end uses in a residence. Water heaters with a high capacity could presumably deliver sufficiently hot water at all times during the test, but water heaters with lower capacity may fail to provide water at a required temperature under those draw clusters that called for large volumes of hot water in a short time. Under AET's approach, a water heater would be rated for those clusters during which it could meet the demand placed upon it as determined by the outlet temperature during those draw clusters. (AET, No. 22 at pp. 18–37) AET commented that details of the test method needed to be refined, and no discussion was provided as to how to use the efficiency determined during each draw cluster for which the water heater could meet the demand to yield an energy factor.

DOE has tentatively concluded that the current DOE test procedure's draw pattern applied during the simulated-use test can potentially yield results that are biased towards particular water-heating technologies. The DOE test procedure specifies a small number of draws per day when compared to typical usage, a relatively large time between draws, and uniform volumes of water per draw. The test procedure applies to all water heater technologies without regard to any inherent differences in performance across the technologies. A revised draw pattern in the simulated-use test that better reflects how water is actually used in different homes using different water heater technologies could allow for a more realistic representation of the expected energy consumption consumers would experience for a particular water heater technology.

A test procedure that is completely uniform across all water heater types and sizes (*i.e.,* no differences in the amount of hot water drawn or the number of draws, etc.) can provide results that are biased toward different water heater technologies. For electric resistance and fossil fuel-fired storage water heaters, the predominant factor affecting the energy factor is the total amount of water removed per day. At a given set point temperature, the water heater loses heat to the environment at an essentially constant rate regardless of the amount of water removed. Since the energy factor is the ratio of hot water energy delivered to the overall energy consumed by the water heater, which is a sum of that needed to heat the water and that which is lost to the environment, the energy factor increases when the numerator of that ratio increases. Hence, the energy factor increases when the amount of water delivered per 24 hours increases. The performance of these water heaters is not expected to depend upon the length of draws, the flow rates of draws, nor the spacing between the draws.

Storage water heaters that rely on heat pump technology show the same efficiency trend with overall delivered water volume per day as seen with other storage water heater technologies, but it is also expected that the energy factors would depend upon the way that water is distributed among draws. A heat pump water heater operates most efficiently when the heat pump portion of the water heater provides the heat to the water as opposed to any backup electric resistance heating. This backup resistance heating is needed when the hot water in the appliance is depleted and a rapid amount of heat needs to be delivered to raise the stored water temperature back to the desired value. Since heat pumps tend to have a low heating rate, heat pump water heaters currently on the market incorporate resistance elements to provide that rapid heating. These resistance elements, however, dramatically reduce the efficiency. In the current test procedure, water heaters that have been tested do not require backup electric resistance heating to maintain an adequate water temperature within the tank since there is enough time between draws for the tank to fully recover to a

temperature that is above that which triggers the resistance elements. If a revised draw pattern would require a larger amount of water to be drawn from the water heater in a set period of time, either through a single larger draw or multiple draws spaced close together as would be more representative of average use, the heat pump water heater may be forced to utilize electric resistance heating to maintain the required tank temperature, and the energy factor would drop.

For small storage water heaters in the ''point-of-use'' category (water heaters that generally are not intended to serve as a single water heater for all uses in a household), a test utilizing the current draw pattern would likely result in delivery of water during the draws that is below a temperature that would be considered useful by the resident. These units have a small stored volume of hot water that is appropriate for small uses such as hand washing but not for a draw of more than 10 gallons at 3 gallons per minute (gpm), as is imposed by the current test procedure. An efficiency test that takes into account these limitations should put a demand on the water heater that calls for individual draws less than those implemented in the current DOE test.

Draw patterns and water heater cycling frequency likely have an effect on the measured efficiency of instantaneous water heaters. Instantaneous water heaters typically use large burners or heating elements to heat the water from the inlet temperature to the outlet temperature as it flows through the appliance. The burner typically is not energized until a water draw is initiated. Once the draw stops, the burner is shut off, and the remaining water in the appliance and the material making up the appliance gradually lose their heat and return to the ambient temperature. This heat loss (losses associated with heating up and cooling off of the burner) is considered a cycling loss, as the loss is associated with the cycling on and off of the water heater's main energy input.

Draw patterns affect water heater cycling and, thus, the overall measured efficiency of the water heater. Shorter draws typically act to lower the measured efficiency because, as the water heater cycles more frequently, cycling losses increase. Further, cycling losses account for a larger portion of energy usage during shorter draws, resulting in a disproportionate amount of heat input going towards raising the temperature of the heat exchanger as opposed to raising the temperature of the water. Hence, shorter draws typically result in a lower measured efficiency. However, draws that are clustered closer together typically act to raise the measured efficiency by reducing cycling losses because the appliance may be able to maintain an elevated temperature between the end of one draw and the initiation of a subsequent draw. The cycling losses are mitigated by the fact that the appliance does not cool down as much after the end of one draw and thus does not need to be heated as much when the subsequent draw is initiated. Hence, shorter spacing between draws typically results in an increase in the water heater's measured efficiency.

The efficiency of instantaneous water heaters is less affected by the total volume of hot water delivered per day than storage water heaters because their standby losses (i.e., losses associated with a water heater in standby mode, independent of the cycling losses discussed above) are negligible. Standby losses increase measured energy consumption without a corresponding increase in energy delivered, thereby decreasing the energy factor. An increase in the volume of water delivered per day results in a nearly proportional increase in energy consumption for instantaneous water heaters. The other drivers of total energy consumption are standby heat loss and cycling heat loss, with standby heat loss being essentially constant during the test and cycling losses being a function of the number of draws and their spacing. As these two losses approach zero, the dependence of energy factor on daily draw volume decreases since the energy consumption is dominated by that needed to heat the water, which vary proportionally. For water heaters currently on the market, the cycling losses experienced by instantaneous water heaters tend to be much less than the standby losses experienced by storage water heaters. Because standby losses increase measured energy consumption without a corresponding increase in energy delivered, the total energy consumption for instantaneous water heaters is much closer to the energy needed to heat the water than that seen with storage water heaters, and the dependence on daily draw volume is also lower.

The flow rate at which water is drawn from the water heater may affect the measured efficiency of an instantaneous water heater. The heat transfer from the heat exchanger to the water is a function of the speed at which water moves through the heat exchanger; efficiency may increase at higher flow rates. Additionally, since instantaneous water heaters typically employ heating elements or burners with variable capacity to meet the desired outlet temperature at different flow rates, the efficiency of the heat input device (*e.g.,* burner or heating element) may also vary depending upon the heating rate. This effect could either increase or decrease the overall efficiency depending upon the setting to which the heating element or burner is tuned.

To summarize, under the current DOE test procedure, certain types of water heaters can provide results that are biased toward certain water heater technologies. The small number of draws imposed under the existing test procedure, relative to the actual number of draws noted in field usage data, reduces the measured cycling losses relative to those occurring in field conditions. By contrast, the duration of time between draws in the test procedure is relatively long when compared to field usage data, which effectively increases the measured cycling losses relative to those occurring in field conditions. Water heaters with low heating rates would appear to benefit since they could easily recover to operational temperature.

The current DOE test procedure does not adequately measure energy efficiency during a representative average use cycle or period of use for some technologies. The uniform volume taken during each draw of the current test method does not simulate high-demand use, such as a long shower, that could change the way that a water heater operates, nor does it simulate performance under short draws during which water is not delivered at the prescribed set point temperature. Furthermore, DOE agrees with commenters who stated that the draw patterns should be based on the delivery capacity of the water heater because, as explained above, the measured water heater efficiency is influenced by the draw pattern incorporated into the test procedure and because a single draw pattern is not appropriate for the range of water heater sizes that fall under the scope of this test procedure. Consequently, DOE proposes a revised simulated-use test that involves four different draw patterns for water heaters of different capacities. Water heaters would be classified into the following usage categories (described below) corresponding to their usage capacity: (1) Point-of-use; (2) low; (3) medium; and (4) high. The proposed classifications are based on delivery capacity as determined in a first-hour rating test for storage-type water heaters or a maximum flow rate test for instantaneous water heaters.

In crafting a proposed set of draw patterns, DOE considered and utilized

the recommended draw patterns submitted by commenters, in particular those submitted by Bradford White (Bradford White, No. 2 at p. 3; Bradford White, No. 30 at p. 11), AHRI (AHRI, No. 46 at p. 3), and AET (AET, No. 22 at p. 1). (DOE notes that no test data were supplied with any of the proposed test methods.) Additionally, DOE utilized data compiled by the LBNL [13] that describes field studies of hot water usage to ensure that the draw patterns were representative of field use. LBNL found that typical usage in residences in North America is characterized by a large number of small volume draws, by a smaller volume of water per day than is currently prescribed in the residential test method, and by a significant variation in draw volume and number of draws per day. The data suggest development of a single typical draw pattern would be difficult and inappropriate. Instead, DOE has attempted to develop several draw patterns that capture key features affecting performance (*e.g.,* length and frequency of draws, flow rates), while maintaining a test that will not be overly burdensome to conduct and which will produce repeatable results.

Based upon this understanding, DOE proposes the following draw patterns containing volumes per day that are consistent with the data found by LBNL. The proposed low-use pattern calls for the water heater to provide 38 gallons per day, which is consistent with the median values found for households with 1 to 2 occupants. The proposed medium-use pattern, which requires a supply of 55 gallons per day, is consistent with the median values found for households with 3 to 4 occupants. The LBNL data show a median volume of hot water used for families with 5 or more occupants to be approximately 58 gallons. This unexpectedly low result might be attributable to the lower sample number of such large households. For this reason, DOE has departed from the LBNL field data and proposes a total volume of 84 gallons per day for the high-use pattern. This value is consistent with that proposed by Bradford White (Bradford White, No. 2 at p. 5) and AHRI (AHRI, No. 46 at p. 6), and DOE believes that it is a representative number for high use cases based on the range of hot water usage per day reported by LBNL. While the LBNL report suggests that the number of draws of hot water per day could exceed 50, DOE has tentatively determined that imposing a draw pattern during a test with that many draws could lead to measurement difficulties owing to (1) the need to measure energy removal in such short draws; and (2) the potential variation inherent in precisely controlling so many draws. Accordingly, DOE has tentatively concluded that a smaller number of draws (ranging from 9 to 14) will strike a balance between the need to capture cycling losses associated with water heater operation and the need for accurate measurement. Additionally, many of the short draws found in field tests are clustered close together in time. In these situations, cycling losses are negligible because the water heater remains at operational temperature over the course of the smaller draws. For these draws, energy efficiency can be reliably estimated by consolidating the multiple draws into a single larger draw.

As discussed in section III.F, ''Test Conditions,'' DOE proposes that both the first-hour rating test and the maximum flow rate test will be carried out with the prescribed outlet water temperature at 125 °F. DOE proposes to modify the first-hour rating test to stop draws of hot water when the outlet water temperature drops 15 °F below its maximum temperature during each draw. This cut-off temperature is a departure from the current test, which cuts off the draw when the outlet water temperature drops 25 °F below the maximum recorded outlet temperature. With the nominal delivery temperature being 135 °F in the current test procedure, the cut-off temperature is 110 °F. This proposed change in temperature drop to trigger the end of a draw would maintain the approach that the minimum useful temperature of hot water is 110 °F. This value is consistent with Table 3, Chapter 50 of the ASHRAE Handbook of HVAC Applications,[14] which indicates that a representative temperature for showers and tubs is 110 °F. For water heaters with rated storage volumes at or above 20 gallons, water will continue to be drawn at 3 gallons per minute during the first-hour rating test. For water heaters having rated storage volumes below 20 gallons that are not designed to provide a continuous supply of hot water, water will be drawn at a rate of 1 gallon per minute during the first-hour rating test. A water heater that is designed to provide a continuous supply of hot water at the set point temperature [15] will be tested to obtain a maximum flow rate, while water heaters that are not so designed will be subject to a first-hour rating test.

DOE proposes the following ranges of first-hour ratings and maximum flow rates to characterize storage and instantaneous water heaters, respectively:

Point-of-use:
- First-Hour Rating less than 20 gallons.
- Maximum Flow Rate less than 1.7 gallons per minute (gpm).

Low:
- First-Hour Rating greater than or equal to 20 gallons, less than 55 gallons.
- Maximum Flow Rate greater than 1.7 gpm, less than 2.8 gpm.

Medium:
- First-Hour Rating greater than or equal to 55 gallons, less than 80 gallons.
- Maximum Flow Rate greater than or equal to 2.8 gpm, less than 4 gpm.

High:
- First-Hour Rating greater than or equal to 80 gallons.
- Maximum Flow Rate greater than or equal to 4 gpm.

DOE based these proposed ranges (or ''bins'') on first-hour rating data for existing models, requirements of the current plumbing code, and recommended cut-offs proposed by Bradford White and AHRI. (Bradford White, No. 2 at pp. 4–5; Bradford White, No. 30 at p. 2; AHRI, No. 46 at p. 4) In today's NOPR, DOE proposes to modify the set point temperature from the current 135 °F to 125 °F, as discussed further in section III.F.1. While it is acknowledged that the published first-hour rating data were taken at a set point temperature of 135 °F, limited testing shows that first-hour ratings at a set point temperature of 125 °F are comparable to those at 135 °F. The first-hour ratings of all water heaters on the market cluster around certain values to accommodate different levels of use. Those clusters are captured in the bins proposed here. DOE's proposed bins differ from those presented by Bradford White in its comments on the October 2011 RFI and the January 2013 RFI, because the commenter's approach grouped medium-use and high-use water heaters into a common category and added a category for water heaters meant for so-called ''heavy-duty use.'' (Bradford White, No. 2 at pp. 4–5) DOE

[13] Lutz, JD, Renaldi, Lekov A, Qin Y, and Melody M., ''Hot Water Draw Patterns in Single Family Houses: Findings from Field Studies,'' Lawrence Berkeley National Laboratory Report number LBNL–4830E (May 2011) (Available at *http://www.escholarship.org/uc/item/2k24v1kj*) (last accessed October 18, 2013).

[14] ASHRAE 2011, *Handbook of HVAC Applications,* Chapter 50 Service Water Heating (Available at: *https://www.ashrae.org/resources-publications/handbook*).

[15] A set point temperature is the temperature that the user selects via a thermosat as the temperature of the delivered hot water at the outlet of the water heater.

has tentatively concluded that the categories defined by Bradford White group too many water heaters in the mid-use category. DOE's proposed first-hour rating categories match those proposed by AHRI. DOE believes that these breakpoints are appropriate based on minimum first-hour ratings required by the Uniform Plumbing Code.[16] The code mandates minimum first-hour ratings for water heaters serving homes with different combinations of bedrooms and bathrooms. Four different minimum values are implemented by the code: 42, 54, 67, and 80 gallons.

DOE has tentatively concluded that its proposed usage categories are appropriate, given that they are consistent with the Uniform Plumbing Code, albeit with certain minor modifications. In considering the Uniform Plumbing Code, DOE considered 42 gallons per day as a lower limit for the low-use category, but concluded that it would not be realistic for a water heater intended to provide point-of-use functionality to deliver up to that level of water in one hour. Instead, DOE has tentatively decided to set the upper limit for point-of-use water heaters and the lower limit for low-use water heaters at 20 gallons per day. While water heaters with first-hour ratings below 42 gallons per day may not be used as a single water heater for whole-house applications, DOE believes that their use more closely resembles that of low-use water heaters rather than that of point-of-use water heaters. DOE has grouped homes with 2 to 4 bedrooms and less than 3 bathrooms in the medium category, which would require minimum first-hour ratings of 54 or 67. Five bedroom homes with up to 2.5 bathrooms or homes with three or more bathrooms would require water heaters with first-hour ratings at least 80 gallons per day; these water heaters fit into the proposed high-use category.

DOE acknowledges the uncertainty in using data generated under the existing test procedure, which are based on a first-hour rating test conducted at a delivery temperature of 135 °F, for establishing bins for the applicable draw patterns. Testing by DOE has indicated that storage water heaters with relatively high recovery rates yield higher first-hour ratings under the proposed procedure than under the current procedure, while those with low recovery rates tend to have slightly lower first-hour ratings at 125 °F compared to the rating at 135 °F. DOE seeks comments related to the translation of current first-hour ratings to a first-hour rating determined using the proposed 125 °F set point and the proposed breakpoints between the different size categories. This is identified as issue 2 in section V.E, ''Issues on Which DOE Seeks Comment.''

The proposed maximum gpm ratings for instantaneous water heaters were devised based on expected uses for water heaters serving applications of different sizes. The categorizations are consistent with those suggested by AHRI, with the ratings being scaled up to account for the higher maximum flow rates expected at the lower set point temperature (125 °F).

DOE seeks comment on the proposed criteria for characterizing water heaters as point-of-use, low usage, medium usage, and high usage, and whether these criteria are appropriate and sufficient. This is identified as issue 3 in section V.E, ''Issues on Which DOE Seeks Comment.''

For each sizing category, DOE proposes to apply a 24-hour simulated-use test to determine the energy factor. One of four separate draw patterns would be applied to each water heater based on the appropriate sizing category. The draw patterns would have the following number of draws per day: Point-of-use: 9; low: 11; medium: 12; and high: 14. DOE acknowledges that the number of draws per day in a typical household can often approach 100 and that the volume in each draw can be very small. However, DOE believes that a test with so many draws would be subject to large variability in results due to the challenges in accurately determining the energy content of such short draws. In contrast, DOE has tentatively concluded that the proposed draw patterns would capture the key ways in which hot water is used in residences while yielding a test that is repeatable.

DOE's proposal uses a slightly modified version of the draw patterns submitted by Bradford White and AHRI in response to the January 2013 RFI as a basis for the low, medium, and high draw patterns; Bradford White did not submit a draw pattern for point-of-use water heaters. In addition, the patterns presented by Bradford White grouped medium-use water heaters with heavy use, so data were missing for both point-of-use and medium use water heaters. Additionally, information provided by AET has also been considered to craft some aspects of the draw patterns. AET provided information on typical uses that would be applied to a water heater in terms of flow rates, number of draws, and volumes. (AET, No. 22 at pp. 22–36) This information was utilized in drafting the proposed draw patterns for point-of-use and medium-use water heaters.

A number of changes are proposed as compared to the current draw patterns found in the DOE simulated-use test procedure. First, the proposed draw patterns would involve more draws than are currently implemented, and the draws would vary in length during the simulated-use test. Second, the spacing between the draws would vary to better capture the effects of different cycling times on the energy efficiency of the water heater. Third, the proposed draws would involve different flow rates during the test; these flow rates would be 1.0, 1.7, or 3.0 gpm.[17] The total volumes that would be removed for each category are in line with recent field data compiled by the Lawrence Berkeley National Laboratory that was previously discussed. DOE believes that the proposed draw patterns would improve the estimation of energy efficiency by considering the impact of shorter draws, lower flow rates, higher number of draws, and variable standby times between draws.

DOE proposes draw patterns for implementation in the 24-hour simulated-use tests as outlined in Table III.2 through Table III.5. The total volume of water drawn in the proposed draw patterns are 10 gallons for the point-of-use pattern, 38 gallons for the low-usage pattern, 55 gallons for the medium-usage pattern, and 84 gallons for the high-usage pattern.

[16] International Association of Plumbing and Mechanical Officials, ''2012 Uniform Plumbing Code'' (2012) (Available at *www.iapmo.org*) (last accessed March 29, 2013).

[17] For point-of-use models, the flow rate is specified as the lesser of 1 gpm or the maximum gpm. Therefore, if a unit were to have a maximum gpm rating below 1.0 gpm, that unit would be tested at its maximum gpm flow rate.

TABLE III.2—POINT-OF-USE DRAW PATTERN

Draw number	Time during test (hh:mm)	Volume (gallons)	Flow rate (gpm)
1	0:00	2	Lesser of (1, max gpm).
2	1:00	1	Lesser of (1, max gpm).
3	1:05	0.5	Lesser of (1, max gpm).
4	1:10	0.5	Lesser of (1, max gpm).
5	1:15	0.5	Lesser of (1, max gpm).
6	8:00	1	Lesser of (1, max gpm).
7	8:15	2	Lesser of (1, max gpm).
8	9:00	1.5	Lesser of (1, max gpm).
9	9:15	1	Lesser of (1, max gpm).

TABLE III.3—LOW-USAGE DRAW PATTERN

Draw number	Time during test (hh:mm)	Volume (gallons)	Flow rate (gpm)
1	0:00	15.0	1.7
2	0:30	2	1
3	1:00	1	1
4	10:30	6	1.7
5	11:30	4.0	1.7
6	12:00	1.0	1
7	12:45	1.0	1
8	12:50	1.0	1
9	16:15	2.0	1
10	16:45	2.0	1.7
11	17:00	3.0	1.7

TABLE III.4—MEDIUM-USAGE DRAW PATTERN

Draw number	Time during test (hh:mm)	Volume (gallons)	Flow rate (gpm)
1	0:00	15	1.7
2	0:30	2.0	1
3	1:40	9.0	1.7
4	10:30	9.0	1.7
5	11:30	5.0	1.7
6	12:00	1.0	1
7	12:45	1.0	1
8	12:50	1.0	1
9	16:00	1.0	1
10	16:15	2.0	1
11	16:45	2.0	1.7
12	17:00	7.0	1.7

TABLE III.5—HIGH-USAGE DRAW PATTERN

Draw number	Time during test (hh:mm)	Volume (gallons)	Flow rate (gpm)
1	0:00	27	3
2	0:30	2.0	1
3	0:40	1	1
4	1:40	9.0	1.7
5	10:30	15	3
6	11:30	5.0	1.7
7	12:00	1.0	1
8	12:45	1.0	1
9	12:50	1.0	1
10	16:00	2.0	1
11	16:15	2.0	1
12	16:30	2.0	1.7
13	16:45	2.0	1.7
14	17:00	14.0	3

For instantaneous water heaters with maximum flow rates less than 1 gpm, DOE proposes that the flow rates during all draws of the point-of-use test will be set at the maximum gpm as determined during that test. DOE also proposes to tighten the tolerance on the volume removed in each draw from 0.5 gallons to 0.25 gallons since these patterns involve smaller draw volumes than in the current procedure.

DOE proposes to utilize interim metrics during testing that would be used in calculations to normalize the test to standard conditions, as in the current test procedure, to account for deviations from the prescribed storage tank temperature, ambient temperature, water delivery temperature, and inlet water temperature. The standby loss coefficient is one interim metric that would be determined during the longest standby portion of each test in which no recovery or draws are taking place. The recovery efficiency is a second interim metric that would be determined based on the first draw of each test, with the energy supplied and consumed during subsequent draws being accounted for when a complete recovery does not occur prior to the second draw.

DOE proposes to abandon the determination of recovery efficiency at different flow rates as currently done for instantaneous water heaters; test data have shown the difference between these recovery efficiencies as being less than five percent, and the resulting effect on the energy factor is negligible.

DOE notes that the proposed draw patterns differ slightly from those suggested by AHRI in response to the January 2013 RFI. (AHRI, No. 46 at pp. 5–6) In DOE's view, the proposed draw patterns appropriately differentiate between the size categories by increasing the number of draws as the size of the water heater increases. DOE also intends to minimize the different number of flow rates required for all tests, with the proposed draw patterns involving three different flow rates as opposed to the four specified by AHRI. The patterns proposed here have also been formulated to allow for the determination of key performance metrics that are needed for computing the energy factor, namely recovery efficiency and standby loss coefficient. DOE believes that the proposed patterns will ease those determinations. Finally, DOE has conducted testing according to the proposed patterns to validate the procedure and make adjustments as needed, whereas AHRI has not indicated that its specific patterns presented have been validated. In any event, DOE has tentatively concluded that the draw patterns proposed in today's NOPR are very similar to the patterns proposed by AHRI, and that little difference will be observed between ratings collected from either draw pattern. This assessment is based on the fact that the total volumes drawn per day for each category are comparable, the number of draws per day is comparable, and each pattern is based on a distribution that represents a cluster of draws in the morning and another cluster in the evening hours. Consequently, DOE has tentatively concluded that the patterns proposed in this NOPR are consistent with those presented by AHRI. DOE seeks comment on whether the proposed draw patterns for the different water heater size categories are appropriate. This is identified as issue 4 in section V.E, ''Issues on Which DOE Seeks Comment.''

D. Instrumentation

DOE proposes to maintain the instrumentation installation requirements and piping configuration as currently specified in the residential water heater test procedure. Bradford White recommended that the internal temperature probe required in the current test procedure be eliminated and that all exposed piping on the inlet and outlet of the water heater be eliminated as much as possible. (Bradford White, No. 30 at p. 2) DOE is concerned that the removal of the internal temperature probe would not enable the critical correction for stored energy inside the water heater, a value that could move the energy factor by several points. For this reason, DOE proposes to maintain the internal temperature probe inside the tank of a storage water heater. DOE is also proposing to maintain the piping configuration as currently specified in the residential water heater test procedure, as some water heaters include particular technologies such as heat traps that minimize losses through piping connections. For storage water heaters having a rated volume below 20 gallons, which are not covered in the existing DOE test method, DOE proposes that the average tank temperature would be determined based on three temperature sensors located within the storage tank as opposed to the currently required six sensors for storage water heaters having a rated volume above 20 gallons. The three sensors would be located at the vertical midpoints of three sections of equal volume within the tank. For these units, DOE believes that three sensors are sufficient for determining the mean tank temperature and that the use of six sensors would provide little extra information and may add to the parasitic heat losses from these smaller units.

DOE proposes to tighten the allowed accuracy on electric power and energy measuring equipment from the current value of ± 1 percent to ± 0.5 percent. A study has shown the significant effect of the accuracy of the electric power measurements on the uncertainty in the overall energy factor.[18] An analogous change was made in ASHRAE 118.2–2006, ''Method of Testing for Rating Residential Water Heaters,'' and DOE research confirms that equipment having this tolerance level can be readily procured. DOE also proposes to require that for mass measurements greater than or equal to 10 pounds (4.5 kg), a scale that is accurate within ± 0.5 percent of the reading be used to make the measurement.

DOE also proposes to modify the data acquisition rate of the inlet and outlet water temperature during draws. Currently, for all water heaters except variable firing rate instantaneous water heaters, temperature data measurements are taken at 5-second intervals starting 15 seconds after the draw commences. For instantaneous water heaters with a variable firing rate, temperature data measurements are taken at 5-second intervals starting 5 seconds after the draw commences. The proposed test procedure amendments call for temperature data at the inlet and outlet temperature sensors to be recorded at 3-second intervals starting 5 seconds after commencement of the draw for all water heaters. Accordingly, DOE also proposes to require that the time constant of the instruments used to measure the inlet and outlet water temperatures be no greater than 2 seconds. DOE anticipates that this approach would better capture the energy impact of water heater start-up and cycling.

E. Discrete Performance Tests

In the October 2011 RFI, DOE considered using a series of discrete tests as an alternative approach to using a single 24-hour simulated-use test to determine the energy factor of residential water heaters. In a series of discrete performance tests, the results of various individual tests (*e.g.,* thermal efficiency test, recovery efficiency test, standby loss test) would be used to calculate the energy factor. This approach would reduce testing burden, yield more repeatable results, and provide the ability to predict

[18] Healy WM, Lutz JD, and Lekov AB., ''Variability in Energy Factor Test Results for Residential Electric Water Heaters,'' *HVAC&R Research,* vol. 9, No. 4 (October 2003).

performance over a broader range of applications. DOE requested comments on the feasibility and equitability of a series of discrete tests in the October 2011 RFI. 76 FR 63211, 63214 (Oct. 12, 2011).

Two commenters (ACEEE, NREL) supported the general premise of discrete performance tests for rating water heaters, while acknowledging the challenges in implementing such an approach. More specifically, NREL indicated that studies are needed to validate that discrete tests would provide a computed energy factor with a level of accuracy equal to or better than a single simulated-use test. (NREL, No. 14 at p. 5) ACEEE indicated that discrete tests combined with an algorithm to determine the energy factor could reduce test time, produce ratings at a variety of usage patterns with a single set of tests, and could be used to account for novel features implemented by manufacturers to improve efficiency. ACEEE also acknowledged that the algorithms would still need to be developed and validated, a process with an unknown time frame. (ACEEE, No. 24 at pp. 2–3)

Eleven commenters (Stone Mountain Technologies, AO Smith, NEEA, NPGA, AHRI, AGA, GTI, Bosch, NRDC, General Electric, and AET) opposed the use of discrete tests to determine the energy factor. AHRI and AO Smith stated that such tests have a limited use relative to the wide range of technologies being employed in current designs of residential water heaters since they would not be as equitable as a simulated-use approach. (AHRI, No. 12 at p. 2; AO Smith, No. 8 at p. 2) GTI commented that much uncertainty remains in the analytical methodology for generating rating metrics, its comparability across equipment categories, and whether the outcome would actually yield a simpler and more repeatable alternative to the current test procedure. (GTI, No. 15 at p. 2) Stone Mountain Technologies stated that testing and analysis to date do not support such an approach. (Stone Mountain Technologies, No. 5 at p. 3) Bosch expressed support for the current draw profile and test approach because of what the commenter perceives as the extremely low repeatability and accuracy of test results at low input rates and the lack of data on appropriate draw patterns for use in calculating the energy factor. (Bosch, No. 17 at p. 2) General Electric expressed support for the current draw profile and test approach, arguing that it would more accurately focus on actual results and more closely approximate the real-world performance of residential water heaters. (GE, No. 21 at pp. 1–2) NEEA stated that the concept of using discrete performance tests to determine energy factor is not practical. (NEEA, No. 9 at p. 3) AGA commented that discrete performance tests have been shown to develop inconsistent results and impose new uncertainties in testing, and NRDC raised questions about the equitability of testing between technology types. (AGA, No. 13 at pp. 1–2; NRDC, No. 20 at p. 2) AET stated that it does not believe that the approach would work in practice because of controls not working as designed, the presence of multiple operating modes on water heaters, and the need to conduct more characterization tests than initially expected. These issues with discrete performance tests would make the algorithms used to obtain an energy factor prone to error. (AET, No. 22 at pp. 5–6)

DOE has decided not to pursue the use of discrete performance tests for rating the energy efficiency of residential water heaters given the potential inequity in test results across technologies, the added uncertainties in ratings, and the general lack of potentially suitable algorithms to develop an energy factor for water heaters. Rather, as discussed previously in section III.C, DOE is maintaining the single simulated-use test, which DOE believes can be a more, technology-blind method for determining the energy efficiency (EF) of water heaters.

F. Test Conditions

1. Water Delivery Temperature

The current residential water heater test procedure calls for average hot water temperature within the storage tank to be set for delivery at 135 °F ± 5 °F (57.2 °C ± 2.8 °C). 10 CFR part 430, subpart B, appendix E, section 2.4. However, DOE noted in the October 2011 RFI that the Underwriters Laboratories (UL) standards specify that manufacturers must ship residential water heaters with thermostats set at temperatures no greater than 125 °F (52 °C) to safeguard against scalding hazards (UL 174, *Standard for Household Electric Storage Tank Water Heaters, Underwriters Laboratories* (April 29, 2004)). DOE also noted that DOE's own research suggests that although the majority of water heaters are shipped with the thermostat preset to 120 °F (49 °C), the average set point in use in the field is 124.2 °F (51.2 °C), suggesting that some homeowners or installers adjust the thermostat. 76 FR 63211, 63214 (Oct. 12, 2011).

The set point impacts the performance of various types of water heaters differently, and as a result, DOE reexamined the appropriateness of the set point specification in the proposed test procedure. As noted in the October 2011 RFI, a higher delivery temperature has a disproportionately large and negative impact on heat pump water heater efficiency (as compared to other types of water heaters), because heat pump water heaters can have markedly different performance at elevated stored water temperature compared to temperatures more representative of typical residential usage. For other types of water heaters, heat transfer characteristics between the heating source and the water may differ at lower delivery temperatures, thereby affecting the efficiency. 76 FR 63211, 63214 (Oct. 12, 2011).

However, DOE also noted in the October 2011 RFI that there are some concerns with using a lower set point temperature in the test procedure: (1) Some end uses (*e.g.,* dishwasher operation) require hot water delivered at 130 °F to 140 °F (54 °C to 60 °C) for effective operation; and (2) there may be the potential for the growth of Legionella in hot water stored below 135 °F (57 °C).[19]

DOE sought comment on the appropriate set point temperature for the residential water heater test procedure and the benefits and concerns with using a lower temperature. Three commenters to the October 2011 RFI (Bradford White, Bosch, and General Electric) recommended that the set point temperature should be kept at its current value of 135 °F (57 °C). Additionally, two commenters on the January 2013 RFI also recommended maintaining the set point at 135 °F (57 °C). (Bradford White, No. 30 at p. 2; AHRI, No. 46 at p. 2) Bosch stated that this value will maintain harmonization with test standards in Canada. General Electric indicated that plumbers may change the set point, but a lower temperature in the test procedure runs the risk of encouraging consumer dissatisfaction with water heaters that are otherwise properly sized for their household due not to lack of capacity, but to lack of properly adjusted storage temperatures. Additionally, General Electric indicated that DOE runs the risk

[19] ASHRAE Guideline 12, ''*Minimizing the Risk of Legionellosis Associated with Building Water Systems,*'' states that the temperature range most favorable for amplification of legionellae bacteria is 77° – 108 °F (25° – 42 °C), and that document recommends that when practical, hot water should be stored at temperatures of 120 °F (49 °C) or above. However, the guideline also states that for high-risk situations (such as in health care facilities and nursing homes), hot water should be stored above 140 °F (60 °C). For more information visit: *www.ashrae.org.*

of encouraging energy inefficiency in actual use at higher set points of water heaters designed and optimized to test procedures at lower set points. (Bradford White, No. 2 at p. 2; Bosch, No. 17 at p. 2; GE, No. 21 at pp. 2–3) In submitting a suggested test method, AHRI noted that it considered lower set points but that its recommendation is to continue to use 135 °F as the set point in the test. AHRI indicated that its recommended draw patterns should be modified if DOE determines that a different set point temperature setting is appropriate. (AHRI, No. 46 at p. 2)

Thirteen comments were submitted that recommended that the set point temperature be lowered from its current value. PGE, SCE, NREL, AET, and ACEEE recommended a set point temperature of 120 °F (PGE, No. 3 at p. 2; SCE, No. 4 at p. 2; NREL, No. 14 at p. 4; AET, No. 22 at p. 3; ACEEE, No. 24 at p. 4), while NEEA recommended a value of 125 °F. (NEEA, No. 9 at p. 3; NEEA, No. 37 at p. 4) In a comment on the January 2013 RFI, the joint commenters supported a set point temperature between 120 °F and 125 °F. (Joint comment, No. 35 at p. 3) Likewise, Stone Mountain Technologies and NRDC recommended a set point between 120 °F and 125 °F. (Stone Mountain Technologies, No. 5 at p. 3; NRDC, No. 20 at p. 2) AHRI and AO Smith did not suggest a specific value, but recommended that the set point temperature be lowered. (AHRI, No. 12 at p. 2; AO Smith, No. 8 at p 2) AET commented that the proposed ASHRAE Standard 188, (Standard 188P), ''Prevention of Legionellosis Associated with Building Water Systems,'' and ASHRAE Guideline 12, ''Minimizing the Risk of Legionellosis Associated with Building Water Systems,'' are re-examining recommendations for preventing the growth of Legionella. AET stated that water temperatures in the range of 120 °F are adequate to prevent Legionella colonies, provided that the water is maintained at a temperature ''high enough, long enough, and often enough.'' (AET, No. 22 at pp. 11–12)

AET commented that the test procedure should allow for variable delivery temperatures, because some point-of-use water heaters are designed to deliver water no hotter than 105 °F (40.6 °C) to 110 °F (43.3 °C). AET argued that no credit should be given to water delivered at temperatures above the set point temperature, in order to discourage temperature overshoots. Likewise, AET argued that no credit should be given to water delivered at a temperature below that which is considered useful to the user (*i.e.,* below 105 °F (40.6 °C)). (AET, No. 22 at p. 13)

After carefully considering these comments, DOE proposes to lower the set point temperature of residential water heaters in the test procedure to 125 °F. This value was primarily selected based on data available in DOE's analysis for the April 2010 energy conservation standards final rule as previously discussed, which found that the average set point temperature for residential water heaters is 124.2 °F (51.2 °C). Additionally, the recent compilation of field data across the United States and southern Ontario by LBNL previously referenced found a median daily outlet water temperature of 122.7 °F (50.4 °C); this value rounded to the nearest 5 °F increment supports a test set point temperature of 125 °F. This new value would apply to first-hour rating tests for storage water heaters, maximum flow rate tests for instantaneous water heaters, and energy factor tests for all water heaters.

DOE appreciates the comment from AET regarding the new proposed guidelines for Legionella prevention, and tentatively concludes that a set point of 125 °F in the test method would not result in safety concerns related to the growth of Legionella. Further, as discussed immediately above, DOE notes that water heaters are commonly set to temperatures in the range of 120 °F to 125 °F even though the current set point in the test method is 135 °F. DOE does not expect consumer behavior related to set points to change if the set point is lowered in the test method.

For first-hour rating tests, DOE proposes that draws would terminate when the outlet temperature drops 15 °F (8.3 °C) from its maximum outlet temperature during the draw, as opposed to the drop of 25 °F (13.9 °C) implemented in the current test procedure. This change would ensure that water delivered meets the nominal useful temperature of 110 °F (43.3 °C). DOE acknowledges that the Canadian test procedure requires testing at 135 °F (57 °C), but DOE is responsible for developing a water heater test procedure that reflects and is appropriate for the United States market. In response to comments indicating that DOE should retain the 135 °F set point temperature, DOE believes that the test should be conducted at typical operating temperatures and should not penalize those units optimized for such typical conditions.

GE commented that the set point temperature should be based upon the outlet water temperature as opposed to the average stored water temperature to allow newer technologies to be included in the protocol and to achieve the goal of being technology-neutral. (GE, No. 36 at p. 2) HTP made a similar assertion that the set point should not be based on the mean tank temperature, noting that requiring a mean tank temperature could penalize condensing gas water heaters that rely on stratification and cooler water at the bottom of the tank to achieve better heat transfer resulting in the condensation of moisture within the flue gases. (HTP, No. 41 at p. 2) Due to these concerns, AHRI suggested an alternative method for setting the thermostat. Instead of setting the thermostat based on the mean tank temperature as determined by the internal tank temperature probe, AHRI suggested that the thermostat setting should be determined by drawing water from the water heater for several minutes to determine if the set point temperature is achieved. (AHRI, No. 46 at p. 5) AHRI proposed that the flow rate at which the water would be drawn during this procedure to set the thermostat would be 1 gpm for point-of-use water heaters and 1.7 gpm for all other size storage water heaters.

DOE agrees in principle with the comments and the suggested approach presented by AHRI for setting the thermostat. After carefully considering these comments, DOE acknowledges that the current method for setting the thermostats of water heaters that rely on stratification may lead to outlet water temperatures significantly higher than would normally be expected in practice, since the top of the water heater needs to be at an elevated temperature compared to the mean temperature to meet the requirement that the mean temperature fall within the value specified in the test procedure. However, DOE is not aware of a simple method to assure that multiple thermostats are set appropriately by monitoring outlet water temperature during a draw.

As a result, DOE proposes a method for determining the appropriate set point temperature that differs slightly from that proposed by AHRI. DOE proposes to apply the thermostat setting procedure that utilizes the outlet temperature during a draw, as suggested by AHRI, only to water heaters having a single thermostat. For water heaters with multiple thermostats, DOE proposes to maintain the procedure currently prescribed in the residential water heater test method which utilizes the internal tank temperature probes to determine if the water heater thermostat is set properly. DOE is not aware of any technologies that rely on stratification that utilize multiple thermostats, so it believes that the current approach for

setting the thermostat is appropriate for water heaters having multiple thermostats. DOE is also proposing to make a clear distinction by rated volume between those water heaters using a lower flow rate during this test compared to those using a higher flow rate since the thermostat setting will need to be done prior to the experimental determination of whether the water heater is to be considered a point-of-use water heater. While making this adjustment, DOE is maintaining calculations to normalize the standby loss to a mean tank temperature of 125 °F ± 5 °F (51.7°C ± 2.8 °C) to ensure equitable comparison between water heaters.

DOE is interested in receiving comments on both the proposed set point temperature of 125 °F ± 5 °F, and the proposed approach to setting the thermostat for storage water heaters, particularly on the appropriateness of different methods for water heaters having a single thermostat compared to those with multiple thermostats. These are identified as issues 6 and 7 in section V.E, ''Issues on Which DOE Seeks Comment.''

2. Ambient Temperature and Relative Humidity

The residential water heater test procedure requires that testing be performed in an environment with an ambient air temperature fixed at 67.5 °F ± 2.5 °F (19.7 °C ± 1.4 °C). 10 CFR part 430, subpart B, appendix E, section 2.2. For heat pump water heaters, however, the environmental conditions are more tightly constrained with an ambient air temperature requirement of 67.5 °F ± 1 °F (19.7 °C ± 0.6 °C) and a relative humidity requirement of 50 percent ± 1 percent. *Id.* These specifications for heat pump water heaters reflect the fact that heat pump water heater energy use is highly dependent on the ambient temperature and relative humidity. Because water heaters are placed in a wide variety of locations within and outside of a home, and given the large impact of these factors on heat pump water heater efficiency, DOE considered potential revisions to the ambient air test conditions set forth in the DOE test procedure in order to assess whether the currently-specified conditions are representative of conditions typically encountered in residential installations. In the October 2011 RFI, DOE requested comment on the appropriate ambient temperature and relative humidity testing points and tolerances for all types of residential water heaters. 76 FR 63211, 63214–15 (Oct. 12, 2011).

DOE received seven comments (Bradford White, Stone Mountain Technologies, AO Smith, AHRI, Bosch, General Electric, and AET) that supported the current ambient temperature and relative humidity conditions. Bradford White suggested that DOE should consider relaxing the tolerances for temperature and relative humidity when testing heat pump water heaters since it is very difficult to control to those conditions, recommending that the allowable ambient temperature variation be ± 2.5 °F and the allowable variation in relative humidity be ± 5 percent. (Bradford White, No. 2 at p. 2; Stone Mountain Technologies, No. 5 at p. 3; AO Smith, No. 8 at p. 2; AHRI, No. 12 at p. 2; Bosch, No. 17 at p. 2; GE, No. 21 at p. 3; AET, No. 22 at p. 4)

NEEA submitted for DOE consideration as a test method a test plan that has been implemented in the Pacific Northwest in which heat pump water heaters are tested at both the current DOE specifications and at a second point with the ambient temperature at 50 °F (10 °C) and the relative humidity at 58 percent. A bin-weighted calculation using these two points would yield an energy factor, and NEEA stated that it believes that these conditions are more appropriate than the current ones for installations in the northern half of the United States and would lead to better estimates of the actual performance in the field. (NEEA, No. 9 at p. 3) NEEA reiterated the desire to test at multiple conditions in response to the January 2013 RFI. (NEEA, No. 37 at p. 5) NRDC indicated that the conditions need to be re-examined but did not offer any suggestions. (NRDC, No. 20 at p. 2) ACEEE suggested that DOE should evaluate changing the ambient temperature to 50 °F or other such value that approximates the national average winter basement temperature. (ACEEE, No. 24 at p. 3) Davis Energy Group presented data from a survey of homes in California that reported average ambient temperatures that ranged from 65.4 °F to 71.7 °F. (Davis Energy Group, No. 6 at p. 1)

After carefully considering these comments, DOE proposes to maintain the current ambient dry bulb temperature of between 65 °F and 70 °F when testing water heaters other than heat pump water heaters and at 67.5 °F ± 1 °F when testing heat pump water heaters. DOE also proposes to maintain relative humidity at 50 percent, but to relax the tolerances to ± 2 percent relative humidity. DOE believes these conditions are generally representative of typical field conditions encountered by water heaters installed in the U.S. and has not found any data to justify changing these conditions. DOE proposes to relax the tolerance for relative humidity because research indicates that commonly-used, laboratory-grade relative humidity sensors have uncertainties on the order of 1 to 1.5 percent. For this reason, the tolerance cannot be expected to be below the accuracy in measuring that value. It should be noted, however, that the relative humidity can be obtained from measurements of dry bulb and wet bulb temperatures, and the determination of relative humidity through these temperature measurements would result in a measure of relative humidity with much lower uncertainty since dry bulb and wet bulb temperatures can be measured with high accuracy. However, most laboratories use relative humidity sensors which provide an accurate but less burdensome method for measuring relative humidity. DOE is also proposing to add a statement to the instrumentation section that specifies that the accuracy of relative humidity sensors shall be within ± 1.5 percent relative humidity.

3. Laboratory Airflow

The existing test procedure specifies that the water heater shall be set up in an area that is protected from drafts. To clarify this statement, DOE proposes to add a stipulation that the area be protected from drafts of more than 50 ft/min (2.5 m/s). This value is in accordance with specifications in Canadian Standard 745–03, ''Energy Efficiency of Electric Storage Tank Water Heaters and Heat Pump Water Heaters.''

G. Annual Energy Consumption Calculation

The annual energy consumption is calculated for residential water heaters in the existing test procedure based on the daily energy consumption multiplied by 365 days. In a letter submitted to the FTC on September 16, 2013, regarding the labeling of residential water heaters, AHRI pointed out that calculating the annual energy consumption based on the daily energy consumption can lead to differing annual energy consumption, and consequently, differing estimated yearly operating costs, for water heater models with the exact same EF rating. AHRI specifically provided an example of two water heaters with differing daily energy consumption values, but with EF values that would round to the same value based on the DOE rounding requirements provided in 10 CFR 430.23(e). AHRI stated that having slightly different yearly operating cost

estimates for two water heaters with the same efficiency rating can be confusing to consumers, and somewhat misleading based on the accuracy of the test method. AHRI suggested revising the calculation of the annual energy consumption so that it is based on the EF rating.

DOE agrees with AHRI regarding the calculation of the annual energy consumption and the accuracy of the test method. As a result, DOE proposes to adopt the calculation method suggested by AHRI for annual energy consumption, which is based on the nominal energy consumed during the test and the energy factor rating, rather than the daily energy consumption.

H. Conversion of Existing Energy Factor Ratings

The proposed test procedure amendments could result in some types of water heaters reporting some numerical changes in EF due to the proposed changes in the draw pattern, set point temperature, and water delivery temperature. However, the extent of change can vary across the numerous design types of water heaters and, perhaps more importantly, within a given design type. This variability makes it difficult to capture the effect of the proposed test procedure amendments by a consistent, systematic adjustment to the current test procedure.

Foreseeing these circumstances, AEMTCA amended EPCA to require that along with the uniform descriptor, DOE must develop a mathematical conversion factor to translate from the existing metrics to the uniform descriptor. (42 U.S.C. 6295(e)(5)(E)) AEMTCA provided that a manufacturer may apply the conversion factor to rerate existing models of covered water heaters that are in existence prior to the effective date of the final rule establishing the uniform descriptor. Further, the conversion factor must not affect the minimum efficiency requirements for covered water heaters, and, as a result, would not lead to a change in measured energy efficiency for existing products. DOE interprets these requirements to mean that DOE will be required to translate existing ratings from the current metrics to the new metric, while maintaining the stringency of the current standards. In the January 2013 RFI, DOE sought comment on the best approach for this conversion factor. 78 FR 2340, 2345 (Jan. 11, 2013).

NREL stated that there is not a simple conversion factor that will work across all systems, but it provided a list of references with validated algorithms that could assist DOE in developing these conversion factors. (NREL, No. 29 at p. 4) AHRI and AO Smith commented that DOE should not simply test multiple units to determine an average difference between the current and new ratings and use that value to convert the ratings. (AHRI, No. 33 at p. 4; AO Smith, No. 34 at p. 3) The joint commenters supported the use of a ''good-enough'' mathematical conversion method to express existing ratings in terms of the new uniform descriptor and urged DOE to test a sample of existing products to validate the algorithmic conversion method. (Joint comment, No. 35 at p. 4) Considering the limited laboratory capacity to test all water heaters under the revised method of test, NEEA commented that DOE should assume that all water heaters that comply with current standards will also comply after the implementation of the new metrics. (NEEA, No. 37 at p. 6) EEI commented that the conversion factor should not make currently existing standards more stringent and should only be based on point-of-use metrics to be consistent with Federal law. (EEI, No. 40 at p. 2) HTP commented that the most exact approach would be to conduct an empirical analysis using curve fitting to actual test data, although the commenter acknowledged that there is not sufficient time for manufacturers to obtain this information and for the Department to then correlate and analyze the data. (HTP, No. 41 at p. 3)

DOE notes these comments regarding the conversion factor and will consider them fully once the test procedure is finalized to assist in developing the conversion factor. DOE plans to conduct a separate rulemaking to establish the conversion factor once the test method is finalized, and in that rulemaking, DOE will establish a mathematical method for determining the rated efficiency under the new efficiency descriptor from the rated efficiency under the existing metrics. Should it become apparent in the rulemaking to establish the conversion factor that changes may be required in the test procedure, DOE would address any issues at that time. DOE also plans to translate its current energy conservation standards to equivalent standards denominated in the new uniform efficiency metric in the separate rulemaking.

I. Other Issues

DOE also sought comments in the October 2011 RFI and the January 2013 RFI on any other relevant issues that commenters believe could affect the test procedure for water heaters, and continues to seek comment in today's notice. 76 FR 63211, 63215 (Oct. 12, 2011); 78 FR 2340, 2346 (Jan. 11, 2013). Although DOE has attempted to identify those portions of the test procedure where it believes amendments may be warranted, interested parties are welcome to provide comments on any aspect of the test procedure, including updates of referenced standards, as part of this comprehensive 7-year-review rulemaking.

AET supported keeping the inlet water temperature at 58 °F. (AET, No. 22 at p. 4) Davis Energy Group provided data on average inlet water temperatures reported in studies in California that ranged from 64.2 °F to 72.3 °F. (Davis Energy Group, No. 6 at p. 3) Despite these values being higher than the current nominal temperature specified in the current DOE test procedure, DOE has not seen any data that suggests a different temperature is more appropriate on a national basis, so DOE has tentatively decided to maintain the inlet temperature at 58 °F in the proposed test procedure.

AHRI suggested an alternative means to prepare a storage-type water heater prior to commencement of the 24-hour simulated-use test. (AHRI, No. 46 at p. 7) AHRI suggested that DOE could improve the consistency of energy factor tests by running the draw patterns on two consecutive days, with measurements only taking place during the second 24-hour period. After careful consideration, DOE has tentatively concluded that this approach would lead to more consistent results since the state of the water heater at the beginning of the 24-hour test period will be similar to that at the end of the test period, thereby minimizing the need to make large corrections to the energy consumption values which could introduce errors. DOE is aware of testing conducted in this manner that has resulted in consistent values for the energy factor.[20] DOE is tentatively proposing to require storage water heaters to be pre-conditioned in this manner. It is DOE's understanding that test laboratories must already let the water heater sit at temperature for an extended period of time to let the unit achieve operational temperature. Therefore, DOE reasons that the proposed pre-conditioning routine might be done during this stage, thereby resulting in little or no added test time. DOE is interested in comment regarding the value of the pre-conditioning period and the incremental burden, if any, that

[20] Healy WM,, Lutz JD, and Lekov AB., ''Variability in Energy Factor Test Results for Residential Electric Water Heaters,'' *HVAC&R Research,* vol. 9, No. 4 (October 2003).

it would place on manufacturers. This is identified as issue 5 in section V.E, ''Issues on Which DOE Seeks Comment.''

NREL argued that published metrics from the DOE test procedure should allow for calculation of performance under conditions outside the particular conditions imposed by the test procedure. (NREL, No. 29 at p. 1) DOE does not propose to require any published metrics from the test procedure specifically for the purpose of calculating performance at various conditions outside of those imposed by the test method, as the purpose of the DOE test procedure is to determine compliance to minimum efficiency standards and to provide a basis for representation of energy performance to consumers.

The joint comment urged DOE to consider several additional points. (Joint comment, No. 35 at p. 6) First, it raised the question as to the appropriate rating method for a hybrid solar water heating system whose tank might be passive or active. DOE notes that solar water heaters are not covered equipment under EPCA, and thus the DOE test method for water heaters need not address these systems. Further, hybrid solar water heating systems consisting of a stand-alone water heater with additional solar components that are added in the field could be tested according to the rating method provided for the water heater if the solar components were not present. The stand-alone heater would be subject to energy conservation standards without consideration of the benefits, if any, of the solar portion. Second, the joint commenters questioned how to rate ''hybrid'' fuel-fired units with tanks larger than 2 gallons. DOE believes that amendments proposed in this NOPR will cover those products—the storage volume gaps that currently exist in the scope would be removed under this proposal, and the proposed test method would cover those products. Lastly, the joint commenters asked whether test procedures should reflect energy savings from ''smart'' or ''grid-interactive'' water heaters. DOE does not believe that a separate test procedure is warranted for this equipment, because they are functionally similar to non-grid-interactive water heaters. DOE acknowledges that usage patterns for grid-interactive water heaters may be very different from water heaters that are not grid-interactive or controlled as part of demand response programs. However, DOE believes that there is generally a wide range of usage patterns for all water heating products seen in the field, and it would be impractical to attempt to tailor the test method to every potential usage pattern. Thus, DOE believes that such differences in usage patterns are better addressed as part of standards analyses, rather than as a separate test method.

PGE commented that a method is needed for reporting source energy consumption for future standards rulemakings, because the commenter opined that source energy is a more complete metric for representing the energy consumed by appliances and would yield a better comparison between the energy consumption of gas, electric, and gas/electric units. The commenter further opined that the test procedures should include calculations to allow for two energy factors, one based on site energy and one based on source energy. (PGE, No. 3 at p. 2) In response to the January 2013 RFI, DOE received additional comments related to source-based metrics. EEI stated that, consistent with other Federal laws, any new descriptor or conversion factor should only be based on point-of-use metrics. (EEI, No. 40 at p. 2) AGA, NPGA, and APGA all supported a metric based on the full fuel cycle that would provide a complete accounting of energy consumption from extraction, processing, and transportation of energy. (AGA, No. 31, at p. 3; NPGA, No. 32 at p. 1; APGA, No. 39 at p. 1)

In addressing this comment, DOE notes that the Department has historically presented national energy savings (NES) in terms of primary energy savings (*i.e.,* source energy savings). However, in response to the recommendations of a committee on ''Point-of-Use and Full-Fuel-Cycle Measurement Approaches to Energy Efficiency Standards'' appointed by the National Academy of Science, DOE announced its intention to use full-fuel-cycle (FFC) measures of energy use and greenhouse gas and other emissions in the national impact analyses and emissions analyses included in future energy conservation standards rulemakings. 76 FR 51281(August 18, 2011). To this end, DOE has begun to also estimate energy savings using the FFC metric. The FFC metric includes the energy consumed in extracting, processing, and transporting primary fuels, and thus presents a more complete picture of the impacts of efficiency standards. DOE's approach is based on application of FFC multipliers for each fuel type used by covered products and equipment, as presented in DOE's statement of policy published in the **Federal Register** on August 18, 2011. *Id.*

DOE has reviewed the water heater test procedures, including today's proposed amendments, in relation to the newly established FFC policy, and has tentatively concluded that no substantive amendments are needed to the water heater test procedures to accommodate the FFC policy. In support of this conclusion, the following discussion elaborates separately on the FFC policy implications for energy efficiency standards and representations.

For the purposes of energy conservation standards, the test procedure-derived measure of energy consumption and efficiency, including the regulatory efficiency metric (*i.e.,* EF) is sufficient and complete enough to allow for full consideration of the FFC impacts in the energy conservation standards analysis. In support of this conclusion, it is noted that the existing and future energy conservation standards for these products are, and are expected to continue to be, analyzed independently by fuel type. DOE believes this independent analytical approach eliminates any possible mischaracterization or inappropriate consideration of a standard's stringency that might be associated with the test procedure's regulatory metrics for these products. More specifically, the commenters' suggestion to add a source-based Energy Factor for water heaters would not add to or improve the standards analysis for water heaters because of the expansion of the standard's analysis already incorporated in the current approach.

For the purposes of representations, DOE has also tentatively concluded that some small improvements to the water heater test procedure are deemed appropriate to accommodate the FFC policy. It is important to note that both the current test procedure and the proposed revised test method for this product incorporate numerous measures of energy consumption and efficiency, some of which are used in the regulatory context mentioned above and some of which support the consumer information objective of the test procedure. Although the main thrust of the PGE, AGA, APGA, and NPGA suggestions seems to be based on the assumption that the addition of a source-based energy factor would improve analysis for water heater standards, there also seems to be a suggestion that such inclusion would also provide improvement in a non-regulatory or consumer information context. An important example of a non-regulatory metric is annual energy consumption, which provides a complete accounting of the energy consumption to the consumer and which can be used to estimate annual

operating cost. For water heaters, DOE proposes to add terms in the test method to quantify daily electric energy consumption separately from fossil fuel energy consumption and to add separate estimates of annual fossil fuel energy consumption and annual electrical energy consumption in addition to the overall annual energy consumption. This separation would allow the user of the test procedure to estimate operational cost of water heaters that use both fossil fuel and electricity based on the prices of those different energy sources. From a consumer's perspective, annual operating cost is particularly useful for the products that have dual fuel inputs. DOE believes this consumer cost perspective is reasonably reflected in the FFC (*i.e.,* the source/site factors recommended by the commenter are essentially numerically identical to the fuel cost ratios published biennially by the Secretary). Therefore, the commenters' suggested addition of a source-based energy factor using the suggested multipliers is, in DOE's view, not likely to convey any improvement in product-to-product comparisons relative to annual operating cost. In fact, annual operating cost would likely be a superior basis of comparison for consumers, considering the familiarity with annual budgets and the lack of familiarity with source-based efficiency comparisons.

In addition, and perhaps more importantly, annual operating cost provides a reasonable comparison across competing product types utilizing different fuels (*e.g.,* electric water heaters and gas-fueled water heaters). Arguably, site-based energy factors for electric water heaters (typically approximately 0.9 for an electric resistance model) would be higher than the counterpart energy factors for gas water heaters (typically approximately 0.6), but not representative of the relative efficiency of each type of water heater. Thus, an inappropriate conclusion would be conveyed to consumers. DOE believes such inappropriate conclusions can be easily avoided in any consumer information program by focusing on annual operating cost. Here again, the biennial published unit cost of energy would protect the consumer from inappropriate conclusions. Accordingly, for purposes of representations, DOE is not aware, nor has it been made aware through responses to the request for information, of any specific problems, shortcomings, or misrepresentations resulting from the existing test procedure measures of energy consumption and efficiency as it relates to the FFC policy. The proposed amendments to the water heater test procedure would provide additional metrics that could be used should one desire more information related to the FFC policy for a particular application of the test method.

DOE is interested in receiving comment on adding terms to quantify daily electric energy consumption separately from fossil fuel energy consumption and adding separate estimates of annual fossil fuel energy consumption and annual electrical energy consumption in addition to the overall annual energy consumption. This is identified as issue 8 in section V.E, ''Issues on Which DOE Seeks Comment.''

A final issue raised by commenters is that heat pump water heaters that have recently entered the market typically have multiple operational modes, and the current DOE test procedure does not specify which mode should be used when the unit is undergoing testing. AO Smith and AHRI commented that all heat pump water heaters should be tested under a single mode of operation which is the default or ''out-of-the-box'' condition. (AO Smith, No. 8 at p. 2; AHRI No. 12 at p. 3) DOE agrees with this comment and proposes a clarification to the test procedure to indicate that heat pump water heaters are to be tested in the default mode when obtaining both the first-hour rating and determining the energy factor. This clarification is consistent with guidance issued by DOE on June 12, 2012 (*see: http://www1.eere.energy.gov/guidance/detail_search.aspx?IDQuestion=623&pid=2&spid=1).*

J. Certification, Compliance, and Enforcement Issues

In this notice of proposed rulemaking, DOE proposes to make several changes to its certification, compliance, and enforcement regulations at 10 CFR Part 429. First, DOE proposes to add requirements to 10 CFR 429.17 that the rated value of storage tank volume must equal the mean of the measured storage volume of the units in the sample. DOE notes that there are currently no requirements from the Department limiting the amount of difference that is allowable between the tested (i.e., measured) storage volume and the ''rated'' storage volume that is specified by the manufacturer. DOE has tested 65 residential storage-type water heaters, including 44 gas-fired water heaters, 19 electric water heaters, and 2 oil-fired water heaters. Through this testing, DOE has found that water heaters are consistently rated at storage volumes above their actual storage volume. For gas fired water heaters, the rated volume ranged from 1.5 to 15.6 percent above the measured volume, with the mean being 4.8 percent. For electric water heaters, the rated volume ranged from 5.0 to 10.6 percent above the measured volume, with the mean being 9.4 percent. DOE notes that its minimum energy conservation standards are based on the rated storage volume and decrease as rated storage volume increases. DOE also believes consumers often look to storage volume as a key factor in choosing a storage water heater. Consequently, DOE proposes to adopt rating requirements that the rated value must be the mean of the measured value. In addition, DOE proposes to specify that for DOE-initiated testing, a tested value within five percent of the rated value would be a valid test result where the rated storage volume would then be used in downstream calculations. If the test result of the volume is invalid (*i.e.,* the measured value is more than five percent different than the rated value), then DOE proposes to use the measured value in determining the applicable minimum energy conservation standard and calculations within the test procedure. DOE proposes to specify similar requirements for light commercial water heaters.

Additionally, because the first-hour and maximum gpm ratings will determine the applicable draw pattern for use during the energy factor test, DOE proposes to include rating requirements for those values. DOE proposes that the rated first-hour rating or maximum gpm rating, as applicable, must be the mean of the measured values of the sample used for certifying the basic model's efficiency rating. For DOE testing, the rating will be considered valid if it is within five percent of the certified rating. In such a case, DOE proposes that the rated value would be used for the purposes of choosing the appropriate draw pattern for the energy factor test. In the case of an invalid rating (*i.e.,* the rated first-hour rating or maximum gpm rating is more than five percent different from the measured value), DOE proposes to use the measured value to determine the applicable draw pattern for the energy factor test.

DOE has further considered section 7.0 of the current test procedure, ''Ratings for Untested Models,'' and believes that this information is more appropriately addressed in the 10 CFR part 429, which deals with requirements for certification of residential water heaters. DOE proposes to remove this section from Appendix E and place a similar section in 10 CFR 429.17. DOE

proposes to maintain the requirements for gas water heaters, which allow units using propane gas that have an input rating within 10 percent of an identical natural gas unit to use the rating for the natural gas unit in lieu of separate testing. However, DOE proposes to eliminate the provisions for electric water heaters that currently allow a manufacturer of electric water heaters that are identical except with different input ratings to designate a standard input rating at which to test the water heater.

Under the current procedure, the manufacturer of electric water heaters may designate the standard input rating that would apply to all models that are identical with the exception of the power input to the heating element and test only at single input rating. It provides instructions for specifying the first-hour rating of units with higher and lower input ratings than the standard rating. The procedure also provides that the energy factor can be assumed to be the same across all input ratings. DOE proposes to remove these provisions due to the proposed revisions in the test method for the first-hour rating and energy factor tests. The first-hour rating would be expected to vary based on the power input to the electric heating element, and under the revisions proposed in this test method the applicable draw pattern for the energy factor test would be based on the first-hour rating. As a result, it is important that the first-hour rating is accurate for the given model as it will potentially impact the draw pattern and the resultant EF rating.

K. Reference Standards

DOE's test procedure for residential water heaters currently references two industry standards: American Society for Testing and Measurement (ASTM) D2156–80, ''Smoke Density in Flue Gases from Burning Distillate Fuels, Test Method for'' and ASHRAE Standard 41.1–1986, ''Standard Measurement Guide: Section on Temperature Measurements.''

DOE proposes to maintain these references in the uniform efficiency descriptor test method, but to update the reference standards to the most recent versions of the industry standards: ASTM D2156–09, ''Standard Test Method for Smoke Density in Flue Gases from Burning Distillate Fuels'' and ASHRAE Standard 41.1–1986 (RA2006), ''Standard Method for Temperature Measurement.'' DOE has reviewed both of the updated standards and has tentatively concluded that their adoption would not substantially impact the test method.

L. Compliance With Other EPCA Requirements

As mentioned above, in amending a test procedure, EPCA directs DOE to determine to what extent, if any, the test procedure would alter the measured energy efficiency or measured energy use of a covered product. (42 U.S.C. 6293(e)(1)) If the amended test procedure alters the measured energy efficiency or measured energy use, the Secretary must amend the applicable energy conservation standard to the extent the amended test procedure changes the energy efficiency of products that minimally comply with the existing standard. (42 U.S.C. 6293(e)(2)) The current energy conservation standards for residential water heaters are based on energy factor (EF), and the energy conservation standards for commercial water heaters are based on thermal efficiency and standby loss. DOE believes that the conversion factor (or factors) required by AEMTCA (as discussed in section III.G) will ensure that there is no change in measured energy efficiency.

Consistent with 42 U.S.C. 6293(c), DOE typically requires that any representations of energy consumption of covered products must be based on any final amended test procedures 180 days after the publication of the test procedure final rule. However, in this instance, the statute specifically provides for an effective date of the test procedure final rule which is one year after the date of the publication of the final rule. (42 U.S.C. 6295(e)(5)(D)(ii)) In addition, AEMTCA provides for the use of a conversion factor that will apply beginning on the date of publication of the conversion factor in the **Federal Register** and ending on the later of 1 year after the date of publication of the conversion factor or December 31, 2015. (42 U.S.C. 6295(e)(5)(E)(v)) Thus, one year after the publication of the test procedure final rule, it will become effective, and manufacturers may at their discretion make representations of energy efficiency based either (a) on the final amended test procedures or (b) on the previous test procedures after applying the conversion factor. The previous test procedures for residential water heaters are set forth at 10 CFR part 430, subpart B, appendix E as contained in 10 CFR parts 200 to 499 edition revised as of January 1, 2013. The previous test procedures for commercial water heating equipment are set forth at 10 CFR 431.106 as contained in 10 CFR parts 200 to 499 edition revised as of January 1, 2013. As required by AEMTCA, the conversion factor may be used until the later of one year after the publication of the factor, or December 31, 2015, after which time all testing must be conducted in accordance with the new amended test procedure. DOE notes that during the interim period manufacturers must use the same test procedure for representations of energy efficiency, including certifications of compliance.

IV. Procedural Issues and Regulatory Review

A. Review Under Executive Order 12866

The Office of Management and Budget has determined that test procedure rulemakings do not constitute ''significant regulatory actions'' under section 3(f) of Executive Order 12866, ''Regulatory Planning and Review,'' 58 FR 51735 (Oct. 4, 1993). Accordingly, this regulatory action was not subject to review under the Executive Order by the Office of Information and Regulatory Affairs (OIRA) in the Office of Management and Budget (OMB).

B. Review Under the Regulatory Flexibility Act

The Regulatory Flexibility Act (5 U.S.C. 601 *et seq.,* as amended by the Small Business Regulatory Enforcement Fairness Act of 1996) requires preparation of an initial regulatory flexibility analysis (IFRA) for any rule that by law must be proposed for public comment and a final regulatory flexibility analysis (FRFA) for any such rule that an agency adopts as a final rule, unless the agency certifies that the rule, if promulgated, will not have a significant economic impact on a substantial number of small entities. A regulatory flexibility analysis examines the impact of the rule on small entities and considers alternative ways of reducing negative effects. Also, as required by Executive Order 13272, ''Proper Consideration of Small Entities in Agency Rulemaking,'' 67 FR 53461 (August 16, 2002), DOE published procedures and policies on February 19, 2003, to ensure that the potential impacts of its rules on small entities are properly considered during the DOE rulemaking process. 68 FR 7990. DOE has made its procedures and policies available on the Office of the General Counsel's Web site at: *www.gc.doe.gov/gc/office-general-counsel.*

Today's proposed rule would prescribe test procedure amendments that would be used to determine compliance with energy conservation standards for residential water heaters and certain commercial water heaters. For residential water heaters and certain commercial water heaters, the proposed amendments would establish a uniform

efficiency descriptor which would be more representative of conditions encountered in the field (including modifications to both the test conditions and the draw patterns), and expand the scope of the test procedure to apply to certain residential water heaters and certain commercial water heaters that are currently not covered by the test procedure. DOE reviewed today's proposed rule under the provisions of the Regulatory Flexibility Act and the policies and procedures published on February 19, 2003. 68 FR 7990.

For the manufacturers of the covered water heater products, the Small Business Administration (SBA) has set a size threshold, which defines those entities classified as ''small businesses'' for the purposes of the statute. DOE used the SBA's small business size standards to determine whether any small entities would be subject to the requirements of the rule. 65 FR 30836, 30848–49 (May 15, 2000), as amended at 65 FR 53533, 53544–45 (Sept. 5, 2000) and codified at 13 CFR part 121. The size standards are listed by North American Industry Classification System (NAICS) code and industry description and are available at *http://www.sba.gov/idc/groups/public/documents/sba_homepage/serv_sstd_tablepdf.pdf.* Residential water heater manufacturing is classified under NAICS 335228—''Other Major Household Appliance Manufacturing.'' The SBA sets a threshold of 500 employees or less for an entity to be considered as a small business. Commercial water heaters are classified under NAICS 333319 –''Other Commercial and Service Industry Machinery Manufacturing,'' for which SBA also sets a size threshold of 500 employees or fewer for being considered a small business.

DOE has identified 13 manufacturers of residential water heaters (including manufacturers of products that fall under the proposed expanded scope) that can be considered small businesses. DOE identified nine manufacturers of ''light commercial'' water heaters that can be considered small businesses. Seven of the ''light commercial'' water heater manufacturers also manufacture residential water heaters, so the total number of water heater manufacturers impacted by this rule would be 15. DOE's research involved reviewing several industry trade association membership directories (*e.g.,* AHRI), product databases (*e.g.,* AHRI, CEC, and ENERGY STAR databases), individual company Web sites, and marketing research tools (*e.g.,* Hoovers reports) to create a list of all domestic small business manufacturers of products covered by this rulemaking.

For the reasons explained below, DOE has tentatively concluded that the test procedure amendments contained in this proposed rule would not have a significant economic impact on any manufacturer, including small manufacturers.

For residential water heaters, the amendments proposed in today's notice of proposed rulemaking apply primarily to the draw pattern and water delivery temperature. Under DOE's existing test procedure, manufacturers must perform a simulated use test consisting of 6 draws of equal lengths with a water heater delivery temperature of 135 °F. If adopted, today's proposal would require manufacturers to perform a simulated use test consisting of 9 to 14 draws of varied length, depending on the capacity of the water heater, at a water delivery temperature of 125 °F. The change in water delivery temperature requires no additional effort or expense for the manufacturer, because establishing the test temperature is simply a matter of choosing the appropriate setting on the water heater. Likewise, the change in the number of draws would also result in very little burden on manufacturers. The length and timing of draws for the existing test procedure are largely controlled automatically by computer control. The proposed changes would result in manufacturers having to reprogram the computer test programs to account for the new draw patterns. DOE estimates that this effort would take approximately one week to program and confirm operation of the amended test. It is estimated that approximately two days of a programmer's time would be needed at a cost of $1,000 including overhead and benefits. This one-time cost is comparable to that charged by a third-party test laboratory for a single test, so it is not considered burdensome for water heater manufacturers. Since the simulated use test takes 24 hours under both the existing and proposed test method, the length of the test would not change. The current proposal does specify a 24-hour pre-conditioning period prior to the 24-hour test for storage water heaters, however, which would add to the time required to conduct the test. This extra test time would not require extra personnel, but it may necessitate the development of additional test platforms to accommodate the amount of testing that a manufacturer must conduct. A duplicate test platform, if necessary, could result in an additional cost of approximately $5,000 in terms of materials and time needed for construction. DOE understands, however, that a 24-hour pre-conditioning period is already implemented by manufacturers as a best practice to allow the water heater to achieve operational temperature, so the added burden would be minimal. In addition, these tests can be conducted in the same facilities used for the current energy testing of these products, so there would be no additional facility costs required by the proposed rule.

Lastly, the only potential instrumentation upgrade required to conduct the test would be electric power and energy measuring equipment that meets the accuracy levels that have changed from ± 1 percent to ± 0.5 percent. DOE believes that equipment meeting these tolerances is already the industry standard. Purchase of a new instrument, if needed, would be expected to cost approximately $1,000.

For certain commercial water heaters included in the scope of this rulemaking, the efficiency test required for equipment would change from the thermal efficiency and standby loss tests specified in the current DOE test method, to the simulated use test for energy factor proposed in today's NOPR. The energy factor test is inherently more complex than the thermal efficiency and standby loss tests, and, thus, it may be more difficult to implement. However, the standby loss test takes a significant amount of time, which is comparable to the 24-hour simulated use test. Accordingly, overall testing time should remain fairly constant. DOE understands that the complexity of the energy factor test would impose additional costs on manufacturers due to the need to automate draw patterns, as compared to the thermal efficiency test. In addition, some hardware purchases may be needed to allow for computer-controlled draws of hot water that are required in a simulated use test. However, DOE notes that many commercial water heater manufacturers also manufacture residential water heaters, and may already have this equipment from testing of residential units. Nonetheless, DOE estimates that this hardware could cost approximately $1,000, assuming that the laboratory already has a computer-controlled data acquisition system to collect data during the thermal efficiency and standby loss tests currently required. DOE estimates the costs for a programmer to create a computer program that automatically controls the hot water draws would be similar to the costs above, but that the time required may be slightly longer if the program is being developed from scratch. Under such circumstances, DOE estimates that 5 days of programmer

time would be needed for a cost of $2,500, including overhead and benefits.

Lastly, DOE considered the impacts on small businesses that manufacture residential water heaters that fall into categories that were previously not covered by the DOE residential water heater test procedure (*e.g.,* models with storage volumes between 2 and 20 gallons). In reviewing the market for these products, DOE did not identify any manufacturers that did not also manufacture other types of water heating equipment. Thus, DOE believes that these manufacturers would already have the needed equipment and computer programs to conduct the current DOE test. For the reasons stated previously, DOE does not believe the proposed updates will cause significant additional burdens for these manufacturers.

Accordingly, DOE tentatively concludes and certifies that this proposed rule would not have a significant economic impact on a substantial number of small entities, so DOE has not prepared a regulatory flexibility analysis for this rulemaking. DOE will provide its certification and supporting statement of factual basis to the Chief Counsel for Advocacy of the SBA for review under 5 U.S.C. 605(b).

C. Review Under the Paperwork Reduction Act of 1995

Manufacturers of water heaters must certify to DOE that their products comply with all applicable energy conservation standards. In certifying compliance, manufacturers must test their products according to the DOE test procedure for water heaters, including any amendments adopted for the test procedure on the date that compliance is required. DOE has established regulations for the certification and recordkeeping requirements for all covered consumer products and commercial equipment, including residential and commercial water heaters. (76 FR 12422 (March 7, 2011). The collection-of-information requirement for certification and recordkeeping is subject to review and approval by OMB under the Paperwork Reduction Act (PRA). This requirement has been approved by OMB under OMB control number 1910–1400. Public reporting burden for the certification is estimated to average 20 hours per response, including the time for reviewing instructions, searching existing data sources, gathering and maintaining the data needed, and completing and reviewing the collection of information.

Notwithstanding any other provision of the law, no person is required to respond to, nor shall any person be subject to a penalty for failure to comply with, a collection of information subject to the requirements of the PRA, unless that collection of information displays a currently valid OMB Control Number.

D. Review Under the National Environmental Policy Act of 1969

In this proposed rule, DOE proposes test procedure amendments that it expects will be used to develop and implement future energy conservation standards for residential and commercial water heaters. DOE has determined that this rule falls into a class of actions that are categorically excluded from review under the National Environmental Policy Act of 1969 (42 U.S.C. 4321 *et seq.*) and DOE's implementing regulations at 10 CFR part 1021. Specifically, this proposed rule would amend the existing test procedures without affecting the amount, quality, or distribution of energy usage, and, therefore, would not result in any environmental impacts. Thus, this rulemaking is covered by Categorical Exclusion A5 under 10 CFR part 1021, subpart D, which applies to any rulemaking that interprets or amends an existing rule without changing the environmental effect of that rule. Accordingly, neither an environmental assessment nor an environmental impact statement is required.

E. Review Under Executive Order 13132

Executive Order 13132, ''Federalism,'' 64 FR 43255 (August 10, 1999), imposes certain requirements on Federal agencies formulating and implementing policies or regulations that preempt State law or that have Federalism implications. The Executive Order requires agencies to examine the constitutional and statutory authority supporting any action that would limit the policymaking discretion of the States, and to carefully assess the necessity for such actions. The Executive Order also requires agencies to have an accountable process to ensure meaningful and timely input by State and local officials in the development of regulatory policies that have Federalism implications. On March 14, 2000, DOE published a statement of policy describing the intergovernmental consultation process it will follow in the development of such regulations. 65 FR 13735. DOE has examined this proposed rule and has tentatively determined that it would not have a substantial direct effect on the States, on the relationship between the national government and the States, or on the distribution of power and responsibilities among the various levels of government. EPCA governs and prescribes Federal preemption of State regulations as to energy conservation for the products that are the subject of today's proposed rule. States can petition DOE for exemption from such preemption to the extent, and based on criteria, set forth in EPCA. (42 U.S.C. 6297(d)) No further action is required by Executive Order 13132.

F. Review Under Executive Order 12988

Regarding the review of existing regulations and the promulgation of new regulations, section 3(a) of Executive Order 12988, ''Civil Justice Reform,'' 61 FR 4729 (Feb. 7, 1996), imposes on Federal agencies the general duty to adhere to the following requirements: (1) Eliminate drafting errors and ambiguity; (2) write regulations to minimize litigation; (3) provide a clear legal standard for affected conduct rather than a general standard; and (4) promote simplification and burden reduction. Regarding the review required by section 3(a), section 3(b) of Executive Order 12988 specifically requires that Executive agencies make every reasonable effort to ensure that the regulation: (1) Clearly specifies the preemptive effect, if any; (2) clearly specifies any effect on existing Federal law or regulation; (3) provides a clear legal standard for affected conduct while promoting simplification and burden reduction; (4) specifies the retroactive effect, if any; (5) adequately defines key terms; and (6) addresses other important issues affecting clarity and general draftsmanship under any guidelines issued by the Attorney General. Section 3(c) of Executive Order 12988 requires Executive agencies to review regulations in light of applicable standards in sections 3(a) and 3(b) to determine whether they are met or it is unreasonable to meet one or more of them. DOE has completed the required review and tentatively determined that, to the extent permitted by law, the proposed rule meets the relevant standards of Executive Order 12988.

G. Review Under the Unfunded Mandates Reform Act of 1995

Title II of the Unfunded Mandates Reform Act of 1995 (UMRA) requires each Federal agency to assess the effects of Federal regulatory actions on State, local, and Tribal governments and the private sector. Public Law 104–4, sec. 201 (codified at 2 U.S.C. 1531). For regulatory actions likely to result in a rule that may cause the expenditure by

State, local, and Tribal governments, in the aggregate, or by the private sector of $100 million or more in any one year (adjusted annually for inflation), section 202 of UMRA requires a Federal agency to publish a written statement that estimates the resulting costs, benefits, and other effects on the national economy. (2 U.S.C. 1532(a), (b)) The UMRA also requires a Federal agency to develop an effective process to permit timely input by elected officers of State, local, and Tribal governments on a ''significant intergovernmental mandate,'' and requires an agency plan for giving notice and opportunity for timely input to potentially affected small governments before establishing any requirements that might significantly or uniquely affect them. On March 18, 1997, DOE published a statement of policy on its process for intergovernmental consultation under UMRA. 62 FR 12820. (This policy is also available at *www.gc.doe.gov/gc/office-general-counsel.*) DOE examined today's proposed rule according to UMRA and its statement of policy and has tentatively determined that the rule contains neither an intergovernmental mandate, nor a mandate that may result in the expenditure by State, local, and Tribal governments, in the aggregate, or by the private sector, of $100 million or more in any year. Accordingly, no further assessment or analysis is required under UMRA.

H. Review Under the Treasury and General Government Appropriations Act, 1999

Section 654 of the Treasury and General Government Appropriations Act, 1999 (Pub. L. 105–277) requires Federal agencies to issue a Family Policymaking Assessment for any rule that may affect family well-being. This rule would not have any impact on the autonomy or integrity of the family as an institution. Accordingly, DOE has concluded that it is not necessary to prepare a Family Policymaking Assessment.

I. Review Under Executive Order 12630

Pursuant to Executive Order 12630, ''Governmental Actions and Interference with Constitutionally Protected Property Rights,'' 53 FR 8859 (March 18, 1988), DOE has determined that this proposed rule would not result in any takings that might require compensation under the Fifth Amendment to the U.S. Constitution.

J. Review Under Treasury and General Government Appropriations Act, 2001

Section 515 of the Treasury and General Government Appropriations Act, 2001 (44 U.S.C. 3516 note) provides for Federal agencies to review most disseminations of information to the public under information quality guidelines established by each agency pursuant to general guidelines issued by OMB. OMB's guidelines were published at 67 FR 8452 (Feb. 22, 2002), and DOE's guidelines were published at 67 FR 62446 (Oct. 7, 2002). DOE has reviewed today's proposed rule under the OMB and DOE guidelines and has concluded that it is consistent with applicable policies in those guidelines.

K. Review Under Executive Order 13211

Executive Order 13211, ''Actions Concerning Regulations That Significantly Affect Energy Supply, Distribution, or Use,'' 66 FR 28355 (May 22, 2001), requires Federal agencies to prepare and submit to OIRA at OMB, a Statement of Energy Effects for any significant energy action. A ''significant energy action'' is defined as any action by an agency that promulgates or is expected to lead to promulgation of a final rule, and that: (1) Is a significant regulatory action under Executive Order 12866, or any successor order; and (2) is likely to have a significant adverse effect on the supply, distribution, or use of energy; or (3) is designated by the Administrator of OIRA as a significant energy action. For any proposed significant energy action, the agency must give a detailed statement of any adverse effects on energy supply, distribution, or use should the proposal be implemented, and of reasonable alternatives to the action and their expected benefits on energy supply, distribution, and use.

Today's regulatory action to amend the test procedures for measuring the energy efficiency of residential water heaters and certain commercial water heaters is not a significant regulatory action under Executive Order 12866 or any successor order. Moreover, it would not have a significant adverse effect on the supply, distribution, or use of energy, nor has it been designated as a significant energy action by the Administrator of OIRA. Therefore, it is not a significant energy action, and, accordingly, DOE has not prepared a Statement of Energy Effects for this rulemaking.

L. Review Under Section 32 of the Federal Energy Administration Act of 1974

Under section 301 of the Department of Energy Organization Act (Pub. L. 95–91; 42 U.S.C. 7101 *et seq.*), DOE must comply with all laws applicable to the former Federal Energy Administration, including section 32 of the Federal Energy Administration Act of 1974 (Pub. L. 93–275), as amended by the Federal Energy Administration Authorization Act of 1977 (Pub. L. 95–70). (15 U.S.C. 788; FEAA) Section 32 essentially provides in relevant part that, where a proposed rule authorizes or requires use of commercial standards, the notice of proposed rulemaking must inform the public of the use and background of such standards. In addition, section 32(c) requires DOE to consult with the Attorney General and the Chairman of the Federal Trade Commission (FTC) concerning the impact of the commercial or industry standards on competition.

Today's proposed rule would incorporate testing methods contained in the following commercial standards: (1) ASTM D2156–09, ''Standard Test Method for Smoke Density in Flue Gases from Burning Distillate Fuels''; and (2) ASHRAE Standard 41.1–1986 (RA 2006), ''Standard Method for Temperature Measurement.'' While today's proposed test procedure is not exclusively based on these standards, components of the test procedures are adopted directly from these standards without amendment. The Department has evaluated these standards and is unable to conclude whether they fully comply with the requirements of section 32(b) of the FEAA, (*i.e.,* that they were developed in a manner that fully provides for public participation, comment, and review). DOE will consult with the Attorney General and the Chairman of the FTC concerning the impact on competition of requiring manufacturers to use the test methods contained in these standards prior to prescribing a final rule.

V. Public Participation

A. Attendance at the Public Meeting

The time, date and location of the public meeting are listed in the **DATES** and **ADDRESSES** sections at the beginning of this document. If you plan to attend the public meeting, please notify Ms. Brenda Edwards at (202) 586–2945 or *Brenda.Edwards@ee.doe.gov.* As explained in the **ADDRESSES** section, foreign nationals visiting DOE Headquarters are subject to advance security screening procedures. Any foreign national wishing to participate in the meeting should advise DOE of this fact as soon as possible by contacting Ms. Brenda Edwards to initiate the necessary procedures.

In addition, you can attend the public meeting via webinar. Webinar registration information, participant instructions, and information about the capabilities available to webinar

participants will be published on DOE's Web site at: *http://www1.eere.energy.gov/buildings/appliance_ standards/rulemaking.aspx?ruleid=82.* Participants are responsible for ensuring their systems are compatible with the webinar software.

B. Procedure for Submitting Requests To Speak and Prepared General Statements for Distribution

Any person who has an interest in the topics addressed in this notice, or who is representative of a group or class of persons that has an interest in these issues, may request an opportunity to make an oral presentation at the public meeting. Such persons may hand-deliver requests to speak to the address shown in the **ADDRESSES** section at the beginning of this notice of proposed rulemakiing between 9:00 a.m. and 4:00 p.m., Monday through Friday, except Federal holidays. Requests may also be sent by mail or email to Ms. Brenda Edwards, U.S. Department of Energy, Building Technologies Office, Mailstop EE–2J, 1000 Independence Avenue SW., Washington, DC 20585–0121, or *Brenda.Edwards@ee.doe.gov.* Persons who wish to speak should include in their request a computer diskette or CD–ROM in WordPerfect, Microsoft Word, PDF, or text (ASCII) file format that briefly describes the nature of their interest in this rulemaking and the topics they wish to discuss. Such persons should also provide a daytime telephone number where they can be reached.

DOE requests persons selected to make an oral presentation to submit an advance copy of their statements at least one week before the public meeting. DOE may permit persons who cannot supply an advance copy of their statement to participate, if those persons have made advance alternative arrangements with the Building Technologies Office. As necessary, requests to give an oral presentation should ask for such alternative arrangements.

Any person who has plans to present a prepared general statement may request that copies of his or her statement be made available at the public meeting. Such persons may submit requests, along with an advance electronic copy of their statement in PDF (preferred), Microsoft Word or Excel, WordPerfect, or text (ASCII) file format, to the appropriate address shown in the **ADDRESSES** section at the beginning of this notice of proposed rulemaking. The request and advance copy of statements must be received at least one week before the public meeting and may be emailed, hand-delivered, or sent by mail. DOE prefers to receive requests and advance copies via email. Please include a telephone number to enable DOE staff to make follow-up contact, if needed.

C. Conduct of the Public Meeting

DOE will designate a DOE official to preside at the public meeting and may also use a professional facilitator to aid discussion. The meeting will not be a judicial or evidentiary-type public hearing, but DOE will conduct it in accordance with section 336 of EPCA (42 U.S.C. 6306). A court reporter will be present to record the proceedings and prepare a transcript. DOE reserves the right to schedule the order of presentations and to establish the procedures governing the conduct of the public meeting. There shall not be discussion of proprietary information, costs or prices, market share, or other commercial matters regulated by U.S. anti-trust laws. After the public meeting, interested parties may submit further comments on the proceedings, as well as on any aspect of the rulemaking, until the end of the comment period.

The public meeting will be conducted in an informal, conference style. DOE will present summaries of comments received before the public meeting, allow time for prepared general statements by participants, and encourage all interested parties to share their views on issues affecting this rulemaking. Each participant will be allowed to make a general statement (within time limits determined by DOE), before the discussion of specific topics. DOE will allow, as time permits, other participants to comment briefly on any general statements.

At the end of all prepared statements on a topic, DOE will permit participants to clarify their statements briefly and comment on statements made by others. Participants should be prepared to answer questions by DOE and by other participants concerning these issues. DOE representatives may also ask questions of participants concerning other matters relevant to this rulemaking. The official conducting the public meeting will accept additional comments or questions from those attending, as time permits. The presiding official will announce any further procedural rules or modification of the above procedures that may be needed for the proper conduct of the public meeting.

A transcript of the public meeting will be included in the docket, which can be viewed as described in the *Docket* section at the beginning of this notice of the proposed rulemaking, and will be accessible on the DOE Web site. In addition, any person may buy a copy of the transcript from the transcribing reporter.

D. Submission of Comments

DOE will accept comments, data, and information regarding this proposed rule before or after the public meeting, but no later than the date provided in the **DATES** section at the beginning of this proposed rule. Interested parties may submit comments using any of the methods described in the **ADDRESSES** section at the beginning of this notice of proposed rulemaking.

Submitting comments via regulations.gov. The *www.regulations.gov* Web page will require you to provide your name and contact information. Your contact information will be viewable to DOE Building Technologies staff only. Your contact information will not be publicly viewable except for your first and last names, organization name (if any), and submitter representative name (if any). If your comment is not processed properly because of technical difficulties, DOE will use this information to contact you. If DOE cannot read your comment due to technical difficulties and cannot contact you for clarification, DOE may not be able to consider your comment.

However, your contact information will be publicly viewable if you include it in the comment itself or in any documents attached to your comment. Any information that you do not want to be publicly viewable should not be included in your comment, nor in any document attached to your comment. Otherwise, persons viewing comments will see only first and last names, organization names, correspondence containing comments, and any documents submitted with the comments.

Do not submit to *www.regulations.gov* information for which disclosure is restricted by statute, such as trade secrets and commercial or financial information (hereinafter referred to as Confidential Business Information (CBI)). Comments submitted through *www.regulations.gov* cannot be claimed as CBI. Comments received through the Web site will waive any CBI claims for the information submitted. For information on submitting CBI, see the Confidential Business Information section.

DOE processes submissions made through *www.regulations.gov* before posting. Normally, comments will be posted within a few days of being submitted. However, if large volumes of comments are being processed

simultaneously, your comment may not be viewable for up to several weeks. Please keep the comment tracking number that *www.regulations.gov* provides after you have successfully uploaded your comment.

Submitting comments via email, hand delivery/ courier, or mail. Comments and documents submitted via email, hand delivery/ courier, or mail also will be posted to *www.regulations.gov.* If you do not want your personal contact information to be publicly viewable, do not include it in your comment or any accompanying documents. Instead, provide your contact information in a cover letter. Include your first and last names, email address, telephone number, and optional mailing address. The cover letter will not be publicly viewable as long as it does not include any comments.

Include contact information each time you submit comments, data, documents, and other information to DOE. If you submit via mail or hand delivery/ courier, please provide all items on a CD, if feasible, in which case it is not necessary to submit printed copies. No telefacsimiles (faxes) will be accepted.

Comments, data, and other information submitted to DOE electronically should be provided in PDF (preferred), Microsoft Word or Excel, WordPerfect, or text (ASCII) file format. Provide documents that are not secured, written in English, and are free of any defects or viruses. Documents should not contain special characters or any form of encryption and, if possible, they should carry the electronic signature of the author.

Campaign form letters. Please submit campaign form letters by the originating organization in batches of between 50 to 500 form letters per PDF or as one form letter with a list of supporters' names compiled into one or more PDFs. This reduces comment processing and posting time.

Confidential Business Information. Pursuant to 10 CFR 1004.11, any person submitting information that he or she believes to be confidential and exempt by law from public disclosure should submit via email, postal mail, or hand delivery/courier two well-marked copies: One copy of the document marked ''confidential'' including all the information believed to be confidential, and one copy of the document marked ''non-confidential'' with the information believed to be confidential deleted. Submit these documents via email or on a CD, if feasible. DOE will make its own determination about the confidential status of the information and treat it according to its determination.

Factors of interest to DOE when evaluating requests to treat submitted information as confidential include: (1) A description of the items; (2) whether and why such items are customarily treated as confidential within the industry; (3) whether the information is generally known by or available from other sources; (4) whether the information has previously been made available to others without obligation concerning its confidentiality; (5) an explanation of the competitive injury to the submitting person which would result from public disclosure; (6) when such information might lose its confidential character due to the passage of time; and (7) why disclosure of the information would be contrary to the public interest.

It is DOE's policy that all comments may be included in the public docket, without change and as received, including any personal information provided in the comments (except information deemed to be exempt from public disclosure).

E. Issues on Which DOE Seeks Comment

Although DOE welcomes comments on any aspect of this proposal, DOE is particularly interested in receiving comments and views of interested parties concerning the following issues:

1. Is the proposed definition of ''light commercial water heater'' appropriate, and is it appropriate to test commercial water heaters meeting this definition under the uniform descriptor, while testing all other commercial water heaters using thermal efficiency and standby loss?

2. Is information or data available regarding the translation of current first-hour ratings to a first-hour rating determined using the proposed 125 °F set point? What is the effect of such translation on the appropriate breakpoints between different size categories?

3. Is the proposed method of characterizing water heaters as point-of-use, low, medium, or high appropriate and sufficient?

4. Are the draw patterns proposed for the different water heater size categories appropriate?

5. What is the added burden, if any, in requiring a 24-hour pre-conditioning period for storage-type water heaters compared to current practice?

6. Is the proposed change to the nominal water delivery temperature to 125 °F appropriate, and if not, what data or information is available that would justify a different water delivery temperature?

7. Is the proposed method for setting the thermostat(s) of storage-type water heaters appropriate?

8. The addition of terms to quantify daily electric energy consumption separately from fossil fuel energy consumption and adding separate estimates of annual fossil fuel energy consumption and annual electrical energy consumption in addition to the overall annual energy consumption.

VI. Approval of the Office of the Secretary

The Secretary of Energy has approved publication of today's notice of proposed rulemaking.

List of Subjects

10 CFR Part 429

Confidential business information, Energy conservation, Household appliances, Imports, Reporting and recordkeeping requirements.

10 CFR Part 430

Administrative practice and procedure, Confidential business information, Energy conservation, Household appliances, Imports, Incorporation by reference, Intergovernmental relations, Small businesses.

10 CFR Part 431

Administrative practice and procedure, Confidential business information, Test procedures, Incorporation by reference, Reporting and recordkeeping requirements.

Issued in Washington, DC, on October 28, 2013.

Kathleen B. Hogan,

Deputy Assistant Secretary for Energy Efficiency, Energy Efficiency and Renewable Energy.

For the reasons stated in the preamble, DOE proposes to amend parts 429, 430 and 431 of Chapter II, Subchapter D of Title 10, Code of Federal Regulations, as set forth below:

PART 429—CERTIFICATION, COMPLIANCE, AND ENFORCEMENT FOR CONSUMER PRODUCTS AND COMMERCIAL AND INDUSTRIAL EQUIPMENT

■ 1. The authority citation for part 429 continues to read as follows:

Authority: 42 U.S.C. 6291–6317.

■ 2. Section 429.17 is amended by adding new paragraphs (a)(2)(iii), (a)(2)(iv), (c), and (d) to read as follows:

§ 429.17 Residential water heaters.

(a) * * *

(2) * * *

(iii) Any represented value of the rated storage volume must be calculated as the mean of the measured storage volumes, V_{st}, of all the units within the sample.

(iv) Any represented value of first-hour rating for storage water heaters or maximum gallons per minute (gpm for instantaneous water heaters must be calculated as the mean of the measured first-hour ratings or measured max gpm ratings, respectively, of all the units within the sample.

* * * * *

(c) *Determination of ratings for untested basic models.* Manufacturers of gas-fired water heaters are not required to test other models that differ from tested basic models only in whether the unit uses natural gas or propane gas. In lieu of testing, the represented value for a model that utilizes propane gas must be identical to the basic model that utilizes natural gas as long as the rated input ratings are within ±10% for both basic models.

(d) Represented values. The requirements of § 429.17 are applicable to all values reported in accordance with paragraphs (b) and (c) of this section. Represented values of energy factor shall be rounded off to the nearest 0.01.

■ 3. Section 429.44 is amended by:

■ a. Redesignating paragraphs (a), (b) and (c) as (b), (c) and (d);

■ b. Adding a new paragraph (a); and

■ c. Revising newly redesignated paragraph (b).

The revisions and additions read as follows:

§ 429.44 Commercial water heating equipment.

(a) For light commercial water heaters, all represented values should be determined in accordance with § 429.17.

(b) *Determination of Represented Value for All Types of Commercial Water Heaters except Light Commercial Water Heaters.* Manufacturers can determine the represented value, which includes the certified rating, for each basic model of commercial water heating equipment except light commercial water heaters, either by testing, in conjunction with the applicable sampling provisions, or by applying a validated AEDM.

* * * * *

■ 4. Add § 429.134 to read as follows:

§ 429.134 Product-specific enforcement provisions.

(a) [Reserved].

(b) [Reserved].

(c) [Reserved].

(d) *Residential Water Heaters and Light Commercial Water Heaters.* (1) *Verification of rated first-hour rating and rated maximum gpm rating.* The first-hour rating (for storage water heaters) or maximum gallons per minute (gpm) rating (for instantaneous water heaters) of the basic model will be measured pursuant to the test requirements of part 430 for each unit tested. The results of the measurement(s) will be averaged and compared to the value of first-hour rating (for storage water heaters) or maximum gpm rating (for instantaneous water heaters) certified by the manufacturer. The certified rating will be considered valid only if the measurement is within five percent of the certified rating.

(i) If the certified first-hour rating or maximum gpm rating is found to be valid, that rating will be used as the basis for determining the applicable draw pattern pursuant to the test requirements of part 430 for each unit tested.

(ii) If the certified first-hour rating or maximum gpm rating is found to be invalid, the average measured rating will serve as the basis for determining the applicable draw pattern pursuant to the test requirements of part 430 for each unit tested.

(2) *Verification of rated storage volume.* The storage volume of the basic model will be measured pursuant to the test requirements of part 430 for each unit tested. The results of the measurement(s) will be averaged and compared to the rated storage volume certified by the manufacturer. The certified rating will be considered valid only if the measurement is within five percent of the certified rating.

(i) If the certified rated storage volume is found to be valid, that volume will be used as the basis for calculation of the required energy factor for the basic model.

(ii) If the certified rated storage volume is found to be invalid, the average measured volume will be used as the basis for calculation of the required energy factor for the basic model.

PART 430—ENERGY CONSERVATION PROGRAM FOR CONSUMER PRODUCTS

■ 5. The authority citation for part 430 continues to read as follows:

Authority: 42 U.S.C. 6291–6309; 28 U.S.C. 2461 note.

■ 6. Section 430.2 is amended by adding the definitions of ''Electric instantaneous water heater,'' ''Electric storage water heater,'' ''Gas-fired instantaneous water heater,'' ''Gas-fired storage water heater,'' ''Heat pump water heater,'' and ''Oil storage water heater'' in alphabetical order, to read as follows:

§ 430.2 Definitions.

* * * * *

Electric instantaneous water heater means a water heater that uses electricity as the energy source, initiates heating based on sensing water flow, is not capable of delivering water at a controlled temperature of 180 °F (82 °C) or greater, has a maximum nameplate input rating 12 kW (40,956 Btu/h) or less, and has a rated storage capacity of less than 2 gallons (7.6 liters). The unit may use a fixed or variable burner input.

* * * * *

Electric storage water heater means a water heater that uses electricity as the energy source, is not capable of heating and storing water at a thermostatically controlled temperature of 180 °F (82 °C) or greater, has a maximum nameplate input rating of 12 kW (40,956 Btu/h) or less, and has a rated storage capacity of not less than 2 gallons (7.6 liters) nor more than 120 gallons (450 liters).

* * * * *

Gas-fired instantaneous water heater means a water heater that uses gas as the main energy source, initiates heating based on sensing water flow, is not capable of delivering water at a controlled temperature of 180 °F (82 °C) or greater, has a maximum nameplate input rating less than 200,000 Btu/h (210 MJ/h), and has a rated storage capacity of less than 2 gallons (7.6 liters). The unit may use a fixed or variable burner input.

Gas-fired storage water heater means a water heater that uses gas as the main energy source, is not capable of heating and storing water at a thermostatically controlled temperature of 180 °F (82 °C) or greater, has a maximum nameplate input rating of 75,000 Btu/h (79 MJ/h) or less, and has a rated storage capacity of not less than 2 gallons (7.6 liters) nor more than 120 gallons (380 liters).

* * * * *

Heat pump water heater means a water heater that uses electricity as the energy source, is not capable of heating and storing water at a thermostatically-controlled temperature of 180 °F (82 °C) or greater, has a maximum current rating of 24 amperes (including the compressor and all auxiliary equipment such as fans, pumps, controls, and, if on the same circuit, any resistive elements) for an input voltage of 250 volts or less, and, has a rated storage capacity of 120 gallons (450 liters) or less.

* * * * *

Oil storage water heater means a water heater that uses oil as the energy source, is not capable of heating and storing water at a thermostatically controlled temperature of 180 °F (82 °C) or greater, has a nameplate input rating of 105,000 Btu/h (110 MJ/h) or less, and has a manufacturer's rated storage capacity of 120 gallons (190 liters) or less.

* * * * *

■ 7. Section 430.3 is amended by:
■ a. Adding paragraph (f)(11);
■ b. Redesignating paragraphs (h) through (p) as (i) through (o), respectively; and
■ c. Adding a new paragraph (h).

The additions read as follows:

§ 430.3 Materials incorporated by reference.

* * * * *

(f) * * *

(11) ASHRAE 41.1–1986 (RA 2006), Standard Method for Temperature Measurement, ASHRAE approved June 27, 2007, ANSI approved March 25, 2008, IBR approved for appendix E to subpart B of this part.

* * * * *

(h) *ASTM.* American Society for Testing and Materials International, 100 Barr Harbor Drive, P.O. Box C700, West Conshohocken, PA 19428–2959 (*www.astm.org*).

(1) ASTM D2156–09 (''ASTM D2156''), Standard Test Method for Smoke Density in Flue Gases from Burning Distillate Fuels, Edition 09, ASTM approved December 1, 2009, IBR approved for appendix E to subpart B of this part.

(2) [Reserved]

* * * * *

■ 8. Section 430.23 is amended by revising paragraph (e) to read as follows:

§ 430.23 Test procedures for the measurement of energy and water consumption.

* * * * *

(e) *Water Heaters.* (1) The estimated annual operating cost for water heaters shall be—

(i) For a gas or oil water heater, the sum of (a) the product of the annual gas or oil energy consumption, determined according to section 6.1.10 or 6.2.7 of appendix E of this subpart, times the representative average unit cost of gas or oil, as appropriate, in dollars per Btu as provided by the Secretary; plus (b) the product of the annual electric energy consumption, determined according to section 6.1.9 or 6.2.6 of appendix E of this subpart, times the representative average unit cost of electricity in dollars per kilowatt-hour as provided by the Secretary, the resulting sum then being rounded off to the nearest dollar per year.

(ii) For an electric water heater, the product of the annual energy consumption, determined according to section 6.1.9 or 6.2.6 of appendix E of this subpart, times the representative average unit cost of electricity in dollars per kilowatt-hour as provided by the Secretary, the resulting product then being rounded off to the nearest dollar per year.

(2) For an individual test, the tested energy factor for a water heater shall be—

(i) For a gas or oil water heater, as determined by section 6.1.7 or 6.2.4 of appendix E of this subpart rounded to the nearest 0.01.

(ii) For an electric water heater, as determined by section 6.1.7 or 6.2.4 of appendix E of this subpart rounded to the nearest 0.01.

* * * * *

■ 9. Appendix E to Subpart B of Part 430 is revised to read as follows:

Appendix E to Subpart B of Part 430—Uniform Test Method for Measuring the Energy Consumption of Water Heaters

Note: After [*date 365 days after publication of a final rule in the* **Federal Register** *that establishes a conversion factor, or December 31, 2015, whichever is later*], any representations made with respect to the energy use or efficiency of residential water heaters and commercial water heaters covered by this test method must be made in accordance with the results of testing pursuant to this appendix.

Manufacturers conducting tests of residential water heaters and commercial water heaters covered by this test method after [*date 365 days after publication of the test procedure final rule in the* **Federal Register**] and prior to [*date 365 days after publication of the final rule in the* **Federal Register** *that establishes a conversion factor, or December 31, 2015, whichever is later*] must conduct such test in accordance with either this appendix or previous test method. For residential water heaters the previous test method is appendix E as it appeared at 10 CFR part 430, subpart B, appendix E, in the 10 CFR parts 200 to 499 edition revised as of January 1, 2013. For commercial water heaters the previous test method is 10 CFR 431.106 in the 10 CFR parts 200 to 499 edition revised as of January 1, 2013. Any representations made with respect to the energy use or efficiency of such water heaters must be in accordance with whichever version is selected.

1. Definitions

1.1. *Cut-in* means the time when or water temperature at which a water heater control or thermostat acts to increase the energy or fuel input to the heating elements, compressor, or burner.

1.2. *Cut-out* means the time when or water temperature at which a water heater control or thermostat acts to reduce to a minimum the energy or fuel input to the heating elements, compressor, or burner.

1.3. *Design Power Rating* means the nominal power rating that a water heater manufacturer assigns to a particular design of water heater, expressed in kilowatts or Btu (kJ) per hour as appropriate.

1.4. *Draw Cluster* means a collection of water draw events during the simulated-use test that are closely grouped in time.

1.5. *Energy Factor* means the measure of water heater overall efficiency.

1.6. *First-Hour Rating* means the estimate of the maximum volume of ''hot'' water that a storage-type water heater can supply within an hour that begins with the water heater fully heated (*i.e.,* with all thermostats satisfied). It is a function of both the storage volume and the recovery rate.

1.7. *Heat Trap* means a device which can be integrally connected or independently attached to the hot and/ or cold water pipe connections of a water heater such that the device will develop a thermal or mechanical seal to minimize the recirculation of water due to thermal convection between the water heater tank and its connecting pipes.

1.8. *Maximum gpm (L/ min) Rating* means the maximum gallons per minute (liters per minute) of hot water that can be supplied by an instantaneous water heater while maintaining a nominal temperature rise of 67 °F (37.3 °C) during steady-state operation, as determined by testing in accordance with section 5.3.2 of this appendix.

1.9. *Rated Storage Volume* means the water storage capacity of a water heater, in gallons (liters), as certified by the manufacturer pursuant to 10 CFR part 429.

1.10. *Recovery Efficiency* means the ratio of energy delivered to the water to the energy content of the fuel consumed by the water heater.

1.11. *Recovery Period* means the time when the main burner of a storage water heater is raising the temperature of the stored water.

1.12. *Standby* means the time, in hours, during which water is not being withdrawn from the water heater. There are two standby time intervals used within this test procedure: $\tau_{stby,1}$ represents the elapsed time between the time at which the maximum mean tank temperature is observed after the first draw cluster and the minute prior to the start of the first draw following the end of the first draw cluster of the 24-hour simulated use test; $\tau_{stby,2}$ represents the total time during the 24-hour simulated use test when water is not being withdrawn from the water heater.

1.13. *Symbol Usage.* The following identity relationships are provided to help clarify the symbology used throughout this procedure:

C_p specific heat of water
E_{annual} annual energy consumption of a water heater
$E_{annual,e}$ annual electrical energy consumption of a water heater
$E_{annual,f}$ annual fossil-fuel energy consumption of a water heater
E_f energy factor of a water heater
F_{hr} first-hour rating of a storage-type water heater
F_{max} maximum gpm (L/ min) rating of an instantaneous water heater rated at a temperature rise of 67 °F (37.3 °C)

i a subscript to indicate the draw number during a test

M_i mass of water removed during the ith draw of the 24-hr simulated use test

M^*_i for storage-type water heaters, mass of water removed during the ith draw during the first-hour rating test

M_{10m} for instantaneous water heaters, mass of water removed continuously during a 10-minute interval in the maximum gpm (L/min) rating test

n for storage-type water heaters, total number of draws during the first-hour rating test

N total number of draws during the 24-hr simulated use test

Q total fossil fuel and/or electric energy consumed during the entire 24-hr simulated use test

Q_d daily water heating energy consumption adjusted for net change in internal energy

Q_{da} Q_d with adjustment for variation of tank to ambient air temperature difference from nominal value

Q_{dm} overall adjusted daily water heating energy consumption including Q_{da} and Q_{HWD}

Q_e total electrical energy used during the 24-hour simulated use test

Q_f total fossil fuel energy used by the water heater during the 24-hour simulated use test

Q_{hr} hourly standby losses

Q_{HW} daily energy consumption to heat water at the measured average temperature rise across the water heater

$Q_{HW,67\,°F}$ daily energy consumption to heat quantity of water removed during test over a temperature rise of 67 °F (37.3 °C)

Q_{HWD} adjustment to daily energy consumption, Q_{HW}, due to variation of the temperature rise across the water heater not equal to the nominal value of 67 °F

Q_r energy consumption of water heater from the beginning of the test to the end of the first recovery period following the first draw, which may extend beyond subsequent draws

Q_{stby} total energy consumed by the water heater during the standby time interval $\tau_{stby,1}$

$Q_{su,0}$ total fossil fuel and/or electric energy consumed from the beginning of the test to the end of the cutout following the first draw cluster

$Q_{su,f}$ total fossil fuel and/or electric energy consumed from the beginning of the test to the initiation of the first draw following the first draw cluster

$\overline{T}_0$ mean tank temperature at the beginning of the 24-hr simulated use test

$\overline{T}_{24}$ mean tank temperature at the end of the 24-hr simulated use test

$\overline{T}_{a,stby}$ average ambient air temperature during standby periods of the 24-hr simulated use test

$\overline{T}_{del}$ for instantaneous water heaters, average outlet water temperature during a 10-minute continuous draw interval in the maximum gpm (L/ min) rating test

$\overline{T}_{del,i}$ average outlet water temperature during the ith draw of the 24-hr simulated use test

$\overline{T}_{in}$ for instantaneous water heaters, average inlet water temperature during a 10-minute continuous draw interval in the maximum gpm (L/ min) rating test

$\overline{T}_{in,i}$ average inlet water temperature during the ith draw of the 24-hr simulated use test

$\overline{T}_{max,1}$ maximum measured mean tank temperature after cut-out following the first draw of the 24-hr simulated use test

$\overline{T}_{stby}$ average storage tank temperature during the standby period $\tau_{stby,2}$ of the 24-hr simulated use test

$\overline{T}_{su,0}$ maximum measured mean tank temperature at the beginning of the standby period which occurs after cut-out following the final draw of the first draw cluster

$\overline{T}_{su,f}$ measured mean tank temperature at the end of the standby period which occurs at the minute prior to commencement of the first draw that follows the end of the first draw cluster

$\overline{T}_{t,stby}$ average storage tank temperature during the standby period $\tau_{stby,1}$ of the 24-hr simulated use test

$\overline{T}^*_{del,i}$ for storage-type water heaters, average outlet water temperature during the ith draw (i=1 to n) of the first-hour rating test

$\overline{T}^*_{max,i}$ for storage-type water heaters, maximum outlet water temperature observed during the ith draw (i=1 to n) of the first-hour rating test

$\overline{T}^*_{min,i}$ for storage-type water heaters, minimum outlet water temperature to terminate the ith draw (i=1 to n) of the first-hour rating test

UA standby loss coefficient of a storage-type water heater

V_i volume of water removed during the ith draw (i=1 to N) of the 24-hr simulated use test

V^*_i volume of water removed during the ith draw (i=1 to n) of the first-hour rating test

V_{10m} for instantaneous water heaters, volume of water removed continuously during a 10-minute interval in the maximum gpm (L/ min) rating test

V_{st} measured storage volume of the storage tank

W_f weight of storage tank when completely filled with water

W_t tare weight of storage tank when completely empty of water

η_r recovery efficiency

ρ density of water

$\tau_{stby,1}$ elapsed time between the time the maximum mean tank temperature is observed after the first draw cluster and the minute prior to the start of the first draw following the first draw cluster

$\tau_{stby,2}$ overall time of standby periods when no water is withdrawn during the 24-hr simulated use test

2. Test Conditions

2.1 *Installation Requirements.* Tests shall be performed with the water heater and instrumentation installed in accordance with Section 4 of this appendix.

2.2 *Ambient Air Temperature.* The ambient air temperature shall be maintained between 65.0 °F and 70.0 °F (18.3 °C and 21.1 °C) on a continuous basis. For heat pump water heaters, the dry bulb temperature shall be maintained at 67.5 °F ± 1 °F (19.7 °C ± 0.6 °C) and, in addition, the relative humidity shall be maintained between 48% and 52% throughout the test.

2.3 *Supply Water Temperature.* The temperature of the water being supplied to the water heater shall be maintained at 58 °F ± 2 °F (14.4 °C ± 1.1 °C) throughout the test.

2.4 *Storage Tank Temperature.* The thermostats of a storage-type water heater shall be set so that water is delivered at a temperature of 125 °F ± 5 °F (51.7°C ± 2.8 °C).

2.5 *Set Point Temperature.* The thermostat of instantaneous water heaters shall be set to deliver water at a temperature of 125 °F ± 5 °F (51.7 °C ± 2.8 °C).

2.6 *Supply Water Pressure.* During the test when water is not being withdrawn, the supply pressure shall be maintained between 40 psig (275 kPa) and the maximum allowable pressure specified by the water heater manufacturer.

2.7 *Electrical and/ or Fossil Fuel Supply.*

2.7.1 *Electrical.* Maintain the electrical supply voltage to within ±1% of the center of the voltage range specified by the water heater and/or heat pump manufacturer.

2.7.2 *Natural Gas.* Maintain the supply pressure in accordance with the manufacturer's specifications. If the supply pressure is not specified, maintain a supply pressure of 7–10 inches of water column (1.7–2.5 kPa). If the water heater is equipped with a gas appliance pressure regulator, the regulator outlet pressure shall be within ± 10% of the manufacturer's specified manifold pressure. For all tests, use natural gas having a heating value of approximately 1,025 Btu per standard cubic foot (38,190 kJ per standard cubic meter).

2.7.3 *Propane Gas.* Maintain the supply pressure in accordance with the manufacturer's specifications. If the supply pressure is not specified, maintain a supply pressure of 11–13 inches of water column (2.7–3.2 kPa). If the water heater is equipped with a gas appliance pressure regulator, the regulator outlet pressure shall be within ± 10% of the manufacturer's specified manifold pressure. For all tests, use propane gas with a heating value of approximately 2,500 Btu per standard cubic foot (93,147 kJ per standard cubic meter).

2.7.4 *Fuel Oil Supply.* Maintain an uninterrupted supply of fuel oil. Use fuel oil having a heating value of approximately 138,700 Btu per gallon (38,660 kJ per liter).

3. Instrumentation

3.1 *Pressure Measurements.* Pressure-measuring instruments shall have an error no greater than the following values:

Item measured	Instrument accuracy	Instrument precision
Gas pressure	±0.1 inch of water column (±0.025 kPa)	±0.05 inch of water column (±0.012 kPa).
Atmospheric pressure	±0.1 inch of mercury column (±0.34 kPa)	±0.05 inch of mercury column (±0.17 kPa).

Item measured	Instrument accuracy	Instrument precision
Water pressure	±1.0 pounds per square inch (±6.9 kPa)	±0.50 pounds per square inch (±3.45 kPa).

3.2 *Temperature Measurement*

3.2.1 *Measurement.* Temperature measurements shall be made in accordance with the Standard Method for Temperature Measurement, ASHRAE Standard 41.1–1986 (RA 2006).

3.2.2 *Accuracy and Precision.* The accuracy and precision of the instruments, including their associated readout devices, shall be within the following limits:

Item measured	Instrument accuracy	Instrument precision
Air dry bulb temperature	±0.2 °F (±0.1 °C)	±0.1 °F (±0.06 °C).
Air wet bulb temperature	±0.2 °F (±0.1 °C)	±0.1 °F (±0.06 °C).
Inlet and outlet water temperatures	±0.2 °F (±0.1 °C)	±0.1 °F (±0.06 °C).
Storage tank temperatures	±0.5 °F (±0.3 °C)	±0.25 °F (±0.14 °C).

3.2.3 *Scale Division.* In no case shall the smallest scale division of the instrument or instrument system exceed 2 times the specified precision.

3.2.4 *Temperature Difference.* Temperature difference between the entering and leaving water may be measured with any of the following:

a. A thermopile
b. Calibrated resistance thermometers
c. Precision thermometers
d. Calibrated thermistors
e. Calibrated thermocouples
f. Quartz thermometers

3.2.5 *Thermopile Construction.* If a thermopile is used, it shall be made from calibrated thermocouple wire taken from a single spool. Extension wires to the recording device shall also be made from that same spool.

3.2.6 *Time constant.* The time constant of the instruments used to measure the inlet and outlet water temperatures shall be no greater than 2 seconds.

3.3 *Liquid Flow Rate Measurement.* The accuracy of the liquid flow rate measurement, using the calibration if furnished, shall be equal to or less than ±1% of the measured value in mass units per unit time.

3.4 *Electrical Energy.* The electrical energy used shall be measured with an instrument and associated readout device that is accurate within ±0.5% of the reading.

3.5 *Fossil Fuels.* The quantity of fuel used by the water heater shall be measured with an instrument and associated readout device that is accurate within ±1% of the reading.

3.6 *Mass Measurements.* For mass measurements greater than or equal to 10 pounds (4.5 kg), a scale that is accurate within ±0.5% of the reading shall be used to make the measurement. For mass measurements less than 10 pounds (4.5 kg), the scale shall provide a measurement that is accurate within ±0.1 pound (0.045 kg).

3.7 *Heating Value.* The higher heating value of the natural gas, propane, or fuel oil shall be measured with an instrument and associated readout device that is accurate within ±1% of the reading. The heating values of natural gas and propane must be corrected from those reported at standard temperature and pressure conditions to provide the heating value at the temperature and pressure measured at the fuel meter.

3.8 *Time.* The elapsed time measurements shall be measured with an instrument that is accurate within ±0.5 seconds per hour.

3.9 *Volume.* Volume measurements shall be measured with an accuracy of ±2% of the total volume.

3.10 *Relative Humidity.* If a relative humidity (RH) transducer is used to measure the relative humidity of the surrounding air while testing heat pump water heaters, the relative humidity shall be measured with an accuracy of ±1.5% RH.

4. Installation

4.1 *Water Heater Mounting.* A water heater designed to be freestanding shall be placed on a ¾ inch (2 cm) thick plywood platform supported by three 2 × 4 inch (5 cm × 10 cm) runners. If the water heater is not approved for installation on combustible flooring, suitable non-combustible material shall be placed between the water heater and the platform. Counter-top water heaters shall be placed against a simulated wall section. Wall-mounted water heaters shall be supported on a simulated wall in accordance with the manufacturer-published installation instructions. When a simulated wall is used, the construction shall be 2 × 4 inch (5 cm × 10 cm) studs, faced with ¾ inch (2 cm) plywood. For heat pump water heaters not delivered as a single package, the units shall be connected in accordance with the manufacturer-published installation instructions and the overall system shall be placed on the above-described plywood platform. If installation instructions are not provided by the heat pump manufacturer, uninsulated 8 foot (2.4 m) long connecting hoses having an inside diameter of ⅝ inch (1.6 cm) shall be used to connect the storage tank and the heat pump water heater. The testing of the water heater shall occur in an area that is protected from drafts of more than 50 ft/ min (2.5 m/s) from room ventilation registers, windows, or other external sources of air movement.

4.2 *Water Supply.* Connect the water heater to a water supply capable of delivering water at conditions as specified in Sections 2.3 and 2.6 of this appendix.

4.3 *Water Inlet and Outlet Configuration.* For freestanding water heaters that are taller than 36 inches (91.4 cm), inlet and outlet piping connections shall be configured in a manner consistent with Figures 1 and 2. Inlet and outlet piping connections for wall-mounted water heaters shall be consistent with Figure 3. For freestanding water heaters that are 36 inches or less in height and not supplied as part of a counter-top enclosure (commonly referred to as an under-the-counter model), inlet and outlet piping shall be installed in a manner consistent with Figures 4, 5, and 6. For water heaters that are supplied with a counter-top enclosure, inlet and outlet piping shall be made in a manner consistent with Figures 7A and 7B, respectively. The vertical piping noted in Figures 7A and 7B shall be located (whether inside the enclosure or along the outside in a recessed channel) in accordance with the manufacturer-published installation instructions.

All dimensions noted in Figures 1 through 7 shall be achieved. All piping between the water heater and inlet and outlet temperature sensors, noted as T_{IN} and T_{OUT} in the figures, shall be Type ''L'' hard copper having the same diameter as the connections on the water heater. Unions may be used to facilitate installation and removal of the piping arrangements. A pressure gauge and diaphragm expansion tank shall be installed in the supply water piping at a location upstream of the inlet temperature sensor. An appropriately rated pressure and temperature relief valve shall be installed on all water heaters at the port specified by the manufacturer. Discharge piping for the relief valve shall be non-metallic. If heat traps, piping insulation, or pressure relief valve insulation are supplied with the water heater, they shall be installed for testing. Except when using a simulated wall, clearance shall be provided such that none of the piping contacts other surfaces in the test room.

4.4 *Fuel and/or Electrical Power and Energy Consumption.* Install one or more instruments that measure, as appropriate, the quantity and rate of electrical energy and/or fossil fuel consumption in accordance with section 3.

4.5 *Internal Storage Tank Temperature Measurements.* For water heaters with rated storage volumes greater than or equal to 20 gallons, install six temperature measurement sensors inside the water heater tank with a vertical distance of at least 4 inches (100 mm) between successive sensors. For water heaters with rated storage volumes between 2 and 20 gallons, install three temperature measurement sensors inside the water heater

tank. A temperature sensor shall be positioned at the vertical midpoint of each of the six equal volume nodes within a tank larger than 20 gallons or the three equal volume nodes within a tank between 2 and 20 gallons. Nodes designate the equal volumes used to evenly partition the total volume of the tank. As much as is possible, the temperature sensor should be positioned away from any heating elements, anodic protective devices, tank walls, and flue pipe walls. If the tank cannot accommodate six temperature sensors and meet the installation requirements specified above, install the maximum number of sensors which comply with the installation requirements. The temperature sensors shall be installed either through: (1) The anodic device opening; (2) the relief valve opening; or (3) the hot water outlet. If installed through the relief valve opening or the hot water outlet, a tee fitting or outlet piping, as applicable, shall be installed as close as possible to its original location. If the relief valve temperature sensor is relocated, and it no longer extends into the top of the tank, a substitute relief valve that has a sensing element that can reach into the tank shall be installed. If the hot water outlet includes a heat trap, the heat trap shall be installed on top of the tee fitting. Added fittings shall be covered with thermal insulation having an R value between 4 and 8 $h \cdot ft^2 \cdot °F/Btu$ (0.7 and 1.4 $m^2 \cdot °C/W$).

4.6 *Ambient Air Temperature Measurement.* Install an ambient air temperature sensor at the vertical mid-point of the water heater and approximately 2 feet (610 mm) from the surface of the water heater. The sensor shall be shielded against radiation.

4.7 *Inlet and Outlet Water Temperature Measurements.* Install temperature sensors in the cold-water inlet pipe and hot-water outlet pipe as shown in Figures 1, 2, 3, 4, 5, 6, 7a, and 7b, as applicable.

4.8 *Flow Control.* A valve or valves shall be installed to provide flow as specified in sections 5.2.4.1 and 5.4 for storage tank water heaters and sections 5.3.1 and 5.4 for instantaneous water heaters.

4.9 *Flue Requirements.*

4.9.1 *Gas-Fired Water Heaters.* Establish a natural draft in the following manner. For gas-fired water heaters with a vertically discharging draft hood outlet, a 5-foot (1.5-meter) vertical vent pipe extension with a diameter equal to the largest flue collar size of the draft hood shall be connected to the draft hood outlet. For gas-fired water heaters with a horizontally discharging draft hood outlet, a 90-degree elbow with a diameter equal to the largest flue collar size of the draft hood shall be connected to the draft hood outlet. A 5-foot (1.5-meter) length of vent pipe shall be connected to the elbow and oriented to discharge vertically upward. Direct vent gas-fired water heaters shall be installed with venting equipment specified in the manufacturer's instructions using the minimum vertical and horizontal lengths of vent pipe recommended by the manufacturer.

4.9.2 *Oil-Fired Water Heaters.* Establish a draft at the flue collar at the value specified in the manufacturer's instructions. Establish the draft by using a sufficient length of vent pipe connected to the water heater flue outlet, and directed vertically upward. For an oil-fired water heater with a horizontally discharging draft hood outlet, a 90-degree elbow with a diameter equal to the largest flue collar size of the draft hood shall be connected to the draft hood outlet. A length of vent pipe sufficient to establish the draft shall be connected to the elbow fitting and oriented to discharge vertically upward. Direct-vent oil-fired water heaters should be installed with venting equipment as specified in the manufacturer's instructions, using the minimum vertical and horizontal lengths of vent pipe recommended by the manufacturer.

5. Test Procedures

5.1 *Operational Mode Selection.* For water heaters that allow for multiple user-selected operational modes, all procedures specified in this appendix shall be carried out with the water heater in the same operational mode (*i.e.,* only one mode). This operational mode shall be the default mode (or similarly-named, suggested mode for normal operation) as defined by the manufacturer in its product literature for giving selection guidance to the consumer. For heat pump water heaters, if a default mode is not defined in the product literature, each test shall be conducted under an operational mode in which both the heat pump and any electric resistance backup heating element(s) are activated by the unit's control scheme, and which can achieve the internal storage tank temperature specified in this test procedure; if multiple operational modes meet these criteria, the water heater shall be tested under the most energy-intensive mode. If no default mode is specified and the unit does not offer an operational mode that utilizes both the heat pump and the electric resistance backup heating element(s), the first-hour rating test and the simulated-use test shall be tested in heat-pump-only mode. For other types of water heaters where a default mode is not specified, test the unit in the most energy-intensive mode.

5.2 *Storage-type Water Heaters, Including Heat Pump Water Heaters.*

5.2.1 *Determination of Storage Tank Volume.* Determine the storage capacity, $V_{st,}$ of the water heater under test, in gallons (liters), by subtracting the tare weight—measured while the tank is empty—from the gross weight of the storage tank when completely filled with water (with all air eliminated and line pressure applied as described in section 2.5) and dividing the resulting net weight by the density of water at the measured temperature.

5.2.2 *Setting the Thermostat.*

5.2.2.1 *Single Thermostat Tanks.*

5.2.2.1.1 *Water Heaters with Rated Volumes Less than 20 Gallons.* Starting with a tank at the supply water temperature, initiate normal operation of the water heater. After cut-out, initiate a draw from the water heater at a flow rate of 1.0 gallon ± 0.25 gallons per minute (3.8 liters ± 0.95 liters per minute) for 2 minutes. Starting 15 seconds after commencement of draw, record the outlet temperature at 15-second intervals until the end of the 2-minute period. Determine whether the maximum outlet temperature is within the range of 125 °F ± 5 °F (51.7 °C ± 2.8 °C). If not, turn off the water heater, adjust the thermostat, and then drain and refill the tank with supply water. Then, once again, initiate normal operation of the water heater, and repeat the 2-minute outlet temperature test following cut-out. Repeat this sequence until the maximum outlet temperature during the 2-minute test is within of 125 °F ± 5 °F (51.7 °C ± 2.8 °C).

5.2.2.1.2 *Water Heaters with Rated Volumes Greater than or Equal to 20 Gallons.* Starting with a tank at the supply water temperature, initiate normal operation of the water heater. After cut-out, initiate a draw from the water heater at a flow rate of 1.7 gallons ± 0.25 gallons per minute (6.4 liters ± 0.95 liters per minute) for 5 minutes. Starting 15 seconds after commencement of draw, record the outlet temperature at 15-second intervals until the end of the 5-minute period. Determine whether the maximum outlet temperature is within the range of 125 °F ± 5 °F (51.7 °C ± 2.8 °C). If not, turn off the water heater, adjust the thermostat, and then drain and refill the tank with supply water. Then, once again, initiate normal operation of the water heater, and repeat the 5-minute outlet temperature test following cut-out. Repeat this sequence until the maximum outlet temperature during the 5-minute test is within of 125 °F ± 5 °F (51.7 °C ± 2.8 °C).

5.2.2.2 *Tanks with Two or More Thermostats.* Follow the same sequence as for a single thermostat tank (*i.e.,* start at the supply water temperature; operate normally until cut-out). Determine if the setting of the thermostat that controls the uppermost heating elements yields a maximum water temperature of 125 °F ± 5 °F (51.7 °C ± 2.8 °C), as measured by the in-tank sensors that are positioned above the uppermost heating element. If the tank temperature above the uppermost heating element is not within 125 °F ± 5 °F (51.7 °C ± 2.8 °C), turn off the water heater, adjust the thermostat, and then drain and refill the tank with supply water. The thermostat that controls the heating element positioned next highest in the tank shall then be set to yield a maximum water temperature of 125 °F ± 5 °F (51.7 °C ± 2.8 °C). This process shall be repeated for the remaining heating elements in reverse order of height until the thermostat controlling the lowest element is correctly adjusted. When adjusting the thermostat that controls the lowest element, the maximum mean tank temperature after cut-out, as determined using all the in-tank sensors, shall be 125 °F ± 5 °F (51.7 °C ± 2.8 °C). When adjusting all other thermostats, use only the in-tank temperature sensors positioned above the heating element in question to evaluate the maximum mean water temperature as measured by these sensors after cut-out. For heat pump water heaters that control an auxiliary resistive element, the thermostat shall be set in accordance with the manufacturer's installation instructions.

5.2.3 *Power Input Determination.* For all water heaters except electric types, initiate normal operation (as described in section 5.1) and determine the power input, P, to the main burners (including pilot light power, if any) after 15 minutes of operation. If the water heater is equipped with a gas appliance

pressure regulator, the regulator outlet pressure shall be set within ±10% of that recommended by the manufacturer. For oil-fired water heaters, the fuel pump pressure shall be within ±10% of the manufacturer's specified pump pressure. All burners shall be adjusted to achieve an hourly Btu (kJ) rating that is within ±2% of the value specified by the manufacturer. For an oil-fired water heater, adjust the burner to give a CO_2 reading recommended by the manufacturer and an hourly Btu (kJ) rating that is within ±2% of that specified by the manufacturer. Smoke in the flue may not exceed No. 1 smoke as measured by the procedure in ASTM–D–2156–09.

5.2.4 *First-Hour Rating Test.*

5.2.4.1 *General.* During hot water draws for water heaters with rated storage volumes greater than or equal to 20 gallons, remove water at a rate of 3.0 ± 0.25 gallons per minute (11.4 ± 0.95 liters per minute). During hot water draws, for storage-type water heaters with rated storage volumes below 20 gallons, remove water at a rate of 1.0 ± 0.25 gallon per minute ((3.8 ± 0.95 liters per minute). Collect the water in a container that is large enough to hold the volume removed during an individual draw and suitable for weighing at the termination of each draw. Alternatively, a water meter may be used to directly measure the water volume(s) withdrawn.

5.2.4.2 *Draw Initiation Criteria.* Begin the first-hour rating test by imposing a draw on the storage-type water heater. After completion of this first draw, initiate successive draws based on the following criteria. For gas-fired and oil-fired water heaters, initiate successive draws when the thermostat acts to reduce the supply of fuel to the main burner. For electric water heaters having a single element or multiple elements that all operate simultaneously, initiate successive draws when the thermostat acts to reduce the electrical input supplied to the element(s). For electric water heaters having two or more elements that do not operate simultaneously, initiate successive draws when the applicable thermostat acts to reduce the electrical input to the element located vertically highest in the storage tank. For heat pump water heaters that do not use supplemental resistive heating, initiate successive draws immediately after the electrical input to the compressor is reduced by the action of the water heater's thermostat. For heat pump water heaters that use supplemental resistive heating, initiate successive draws immediately after the electrical input to the compressor or the uppermost resistive element is reduced by the action of the applicable water heater thermostat. This draw initiation criterion for heat pump water heaters that use supplemental resistive heating, however, shall only apply when the water located above the thermostat at cut-out is heated to 125 °F ± 5 °F (51.7 °C ± 2.8 °C).

5.2.4.3 *Test Sequence.* Establish normal water heater operation. If the water heater is not presently operating, initiate a draw. The draw may be terminated any time after cut-in occurs. After cut-out occurs (*i.e.,* all thermostats are satisfied), monitor the internal storage tank temperature sensors described in section 4.5 every minute and determine the mean tank temperature by averaging the values from these sensors.

Initiate a draw after a maximum mean tank temperature (the maximum of the mean temperatures of the individual sensors) has been observed following a cut-out. Record the time when the draw is initiated and designate it as an elapsed time of zero ($\tau^* = 0$). (The superscript * is used to denote variables pertaining to the first-hour rating test). Record the outlet water temperature beginning 15 seconds after the draw is initiated and at 5-second intervals thereafter until the draw is terminated. Determine the maximum outlet temperature that occurs during this first draw and record it as $T^*_{max,1}$. For the duration of this first draw and all successive draws, in addition, monitor the inlet temperature to the water heater to ensure that the required 58 °F ± 2 °F (14.4 °C ± 1.1 °C) test condition is met. Terminate the hot water draw when the outlet temperature decreases to $T^*_{max,1} - 15$ °F ($T^*_{max,1} - 8.3$ °C). Record this temperature as $T^*_{min,1}$. Following draw termination, determine the average outlet water temperature and the mass or volume removed during this first draw and record them as $\overline{T}^*_{del,i}$ and M^*_1 or V^*_1, respectively.

Initiate a second and, if applicable, successive draw each time the applicable draw initiation criteria described in section 5.2.4.2 are satisfied. As required for the first draw, record the outlet water temperature 15 seconds after initiating each draw and at 5-second intervals thereafter until the draw is terminated. Determine the maximum outlet temperature that occurs during each draw and record it as $T^*_{max,i}$, where the subscript i refers to the draw number. Terminate each hot water draw when the outlet temperature decreases to $T^*_{max,i} - 15$ °F ($T^*_{max,i} - 8.3$ °C). Record this temperature as $T^*_{min,i}$. Calculate and record the average outlet temperature and the mass or volume removed during each draw ($\overline{T}^*_{del,i}$ and M^*_i or V^*_i, respectively). Continue this sequence of draw and recovery until one hour has elapsed, then shut off the electrical power and/or fuel supplied to the water heater.

If a draw is occurring at an elapsed time of one hour, continue this draw until the outlet temperature decreases to $T^*_{max,n} - 15$ °F ($T^*_{max,n} - 8.3$ °C), at which time the draw shall be immediately terminated. (The subscript n shall be used to denote quantities associated with the final draw.) If a draw is not occurring at an elapsed time of one hour, a final draw shall be imposed at one hour. This draw shall proceed for a minimum of 30 seconds and shall be immediately terminated thereafter when the outlet temperature first indicates a value less than or equal to the cut-off temperature used for the previous draw ($T^*_{min,n-1}$). If an outlet temperature greater than $T^*_{min,n-1}$ is not measured within 30 seconds zero additional credit shall be given towards first-hour rating (*i.e.,* $M^*_n = 0$ or $V^*_n = 0$) based on the final draw. After the final draw is terminated, calculate and record the average outlet temperature and the mass or volume removed during the draw ($\overline{T}^*_{del,n}$ and M^*_n or V^*_n, respectively).

5.2.5 *24-Hour Simulated Use Test.*

5.2.5.1 *Selection of Draw Pattern.* The water heater will be tested under a draw profile that depends upon the rated first-hour rating obtained following the test prescribed in section 5.2.4 of this appendix. One of four different patterns shall be applied based on the rated first-hour rating, as shown in Table I.

TABLE I—DRAW PATTERN TO BE USED FOR STORAGE WATER HEATERS BASED ON RATED FIRST-HOUR RATING

Rated first-hour rating greater than or equal to:	. . . and rated first-hour rating less than:	Draw pattern to be used in simulated use test
0	20	Point-of-Use (Table III.1).
20	55	Low-Usage (Table III.2).
55	80	Medium-Usage (Table III.3).
80	No upper limit	High-Usage (Table III.4).

After completing the first-hour rating test in section 5.2.4, identify the appropriate draw pattern using Table I above. The draw patterns are provided in Tables III.1 through III.4 in section 5.4. Use the appropriate draw pattern when conducting the test sequence provided in section 5.2.5.2.

5.2.5.2 *Test Sequence.* If the water heater is turned off, fill the water heater with supply water and apply pressure as described in section 2.6. Turn on the water heater and associated heat pump unit, if present. If the water heater is turned on, initiate a water draw that energizes the lowest heating element in the water heater. In either case, after the cut-out occurs, begin a 24-hour pre-conditioning period that draws water in the pattern specified by Table I (*i.e.,* using Table III.1, Table III.2, Table III.3, or Table III.4, depending on the rated first-hour rating). No data need to be recorded during this 24-hour pre-conditioning period. At the end of this period, the 24-hour simulated-use test will begin.

At the start of the 24-hour test (after the 24-hour pre-conditioning period), record the mean tank temperature ($\overline{T}_0$), and the electrical and/or fuel measurement readings, as appropriate. Begin the 24-hour simulated use test by withdrawing the volume specified

in the appropriate table in section 5.4 (*i.e.,* Table III.1, Table III.2, Table III.3, or Table III.4, depending on the rated first-hour rating) for the first draw at the flow rate specified. Record the time when this first draw is initiated and assign it as the test elapsed time (τ) of zero (0). Record the average storage tank and ambient temperature every minute throughout the 24-hour simulated use test. At the elapsed times specified in the applicable draw pattern table in section 5.4 for a particular draw pattern, initiate additional draws, removing the volume of hot water at the prescribed flow rate specified by the table. The maximum allowable deviation for any single draw is ± 0.25 gallons (1.9 liters). The quantity of water withdrawn during the last draw shall be increased or decreased as necessary such that the total volume of water withdrawn equals the prescribed daily amount for that draw pattern ± 1.0 gallon (± 3.8 liters).

All draws during the 24-hour simulated use test shall be made at the flow rates specified in the applicable draw pattern table in section 5.4, within a tolerance of ± 0.25 gallons per minute (± 0.95 liters per minute). Measurements of the inlet and outlet temperatures shall be made 5 seconds after the draw is initiated and at every subsequent 3-second interval throughout the duration of each draw. The arithmetic mean of the hot water discharge temperature and the cold water inlet temperature shall be determined for each draw ($\overline{T}_{del,i}$ and $\overline{T}_{in,i}$). Determine and record the net mass or volume removed (M_i or V_i), as appropriate, after each draw.

At the end of the first recovery period following the first draw, which may extend beyond subsequent draws, record the maximum mean tank temperature observed after cut-out, $\overline{T}_{max,1}$, and the energy consumed by an electric resistance, gas or oil-fired water heater (including electrical energy), from the beginning of the test, Q_r. For heat pump water heaters, the total electrical energy consumed during the first recovery by the heat pump (including compressor, fan, controls, pump, etc.) and, if applicable, by the resistive element(s) shall be recorded as Q_r.

At the end of the recovery period that follows the draw notated in the applicable draw pattern table in section 5.4 as the end of the first draw cluster during the test, determine and record the total electrical energy and/or fossil fuel consumed since the beginning of the test, $Q_{su,0}$. In preparation for determining the energy consumed during standby, record the reading given on the electrical energy (watt-hour) meter, the gas meter, and/or the scale used to determine oil consumption, as appropriate. Record the maximum value of the mean tank temperature after cut-out as $\overline{T}_{su,0}$. The time at which this value is attained is the start of the standby period. At 1-minute intervals, record the mean tank temperature and the electric and/or fuel instrument readings until the next draw is initiated. Just prior to initiation of the next draw, record the mean tank temperature as $\overline{T}_{su,f}$. If the water heater is undergoing recovery when the next draw is initiated, record the mean tank temperature $\overline{T}_{su,f}$ at the minute prior to the start of the recovery. The time at which this value occurs is the end of the standby period. Determine the total electrical energy and/or fossil fuel energy consumption from the beginning of the test to this time and record as $Q_{su,f}$. Record the time interval between the time at which the maximum mean tank temperature is observed after the final draw of the first draw cluster and the end of the standby period as $\tau_{stby,1}$. Record the time during which water is not being withdrawn from the water heater during the entire 24-hour period as $\tau_{stby,2}$.

5.3 *Instantaneous Gas and Electric Water Heaters*

5.3.1 *Setting the Outlet Discharge Temperature.* Initiate normal operation of the water heater at the full input rating for electric instantaneous water heaters and at the maximum firing rate specified by the manufacturer for gas instantaneous water heaters. Monitor the discharge water temperature and set to a value of 125 °F ± 5 °F (51.7 °C ± 2.8 °C) in accordance with the manufacturer's instructions. If the water heater is not capable of providing this discharge temperature when the flow rate is 1.7 gallons ± 0.25 gallons per minute (7.6 liters ± 0.95 liters per minute), then adjust the flow rate as necessary to achieve the specified discharge water temperature.

5.3.2 *Maximum gpm Rating Test for Instantaneous Water Heaters.* Establish normal water heater operation at the full input rate for electric instantaneous water heaters and at the maximum firing rate for gas instantaneous water heaters with the discharge water temperature set in accordance with section 5.3.1. During the 10-minute test, either collect the withdrawn water for later measurement of the total mass removed, or alternatively, use a water meter to directly measure the water volume removed.

After recording the scale or water meter reading, initiate water flow through the water heater, record the inlet and outlet water temperatures beginning 15 seconds after the start of the test and at subsequent 5-second intervals throughout the duration of the test. At the end of 10 minutes, turn off the water. Determine the mass of water collected, M_{10m}, in pounds (kilograms), or the volume of water, V_{10m}, in gallons (liters).

5.3.3 *24-hour Simulated Use Test for Instantaneous Water Heaters.*

5.3.3.1 *Selection of Draw Pattern.* The water heater will be tested under a draw profile that depends upon the rated maximum gpm rating obtained following the test prescribed in section 5.3.2. Four different patterns can be applied, and Table II shows which draw pattern is applied to a water heater based on its rated maximum gpm rating.

TABLE II—DRAW PATTERN TO BE USED FOR INSTANTANEOUS WATER HEATER BASED ON RATED MAXIMUM GPM RATING

Rated maximum gpm rating greater than or equal to:	. . . and rated maximum GPM rating less than:	Draw pattern to be used in simulated use test
0	1.7	Point-of-Use (Table III.1).
1.7	2.8	Low-Usage (Table III.2).
2.8	4	Medium-Usage (Table III.3).
4	No upper limit	High-Usage (Table III.4).

The draw patterns are provided in Tables III.1 through III.4 in section 5.4. Use the appropriate draw pattern when conducting the test sequence set forth in section 5.3.3.2.

5.3.3.2 *Test Sequence.* Establish normal operation with the discharge water temperature at 125 °F ± 5 °F (51.7 °C ± 2.8 °C) and set the flow rate set as determined in section 5.2. Prior to commencement of the 24-hour simulated use test, the unit shall remain in an idle state in which controls are active but no water is drawn through the unit for a period of one hour. With no draw occurring, record the reading given by the gas meter and/or the electrical energy meter as appropriate. Begin the 24-hour simulated use test by withdrawing the volume specified in Table III.1 through III.4 for the first draw at the flow rate specified. Record the time when this first draw is initiated and designate it as an elapsed time, τ, of 0. At the elapsed times specified in Table III.1 through III.4 for a particular draw pattern, initiate additional draws, removing the volume of hot water at the prescribed flow rate specified in Table III.1 through III.4, with the maximum allowable deviation for any single draw being ± 0.5 gallons (1.9 liters). The quantity of water drawn during the final draw shall be increased or decreased as necessary such that the total volume of water withdrawn equals the prescribed daily amount for that draw pattern ± 1.0 gallon (± 3.8 liters).

Measurements of the inlet and outlet water temperatures shall be made 5 seconds after the draw is initiated and at every 3-second interval thereafter throughout the duration of the draw. The arithmetic mean of the hot water discharge temperature and the cold water inlet temperature shall be determined for each draw. Record the scale used to measure the mass of the withdrawn water or the water meter reading, as appropriate, after each draw. At the end of the recovery period following the first draw, determine and record the fossil fuel and/or electrical energy consumed, Q_r. Following the final draw and

subsequent recovery, allow the water heater to remain in the standby mode until exactly 24 hours have elapsed since the start of the test (*i.e.,* since $\tau = 0$). At 24 hours, record the reading given by the gas meter and/or the electrical energy meter as appropriate. Determine the fossil fuel and/or electrical energy consumed during the entire 24-hour simulated use test and designate the quantity as Q.

5.4 *Draw Patterns.* The draw patterns to be imposed during 24-hour simulated use tests are provided in Tables III.1 through III.4. Each water heater under test is to be subjected to one of the draw patterns based on its rated first-hour rating or rated maximum gpm rating as discussed in sections 5.2.5.1 and 5.3.3.1, respectively. Each draw pattern specifies the elapsed time in hours and minutes during the 24-hour test when a draw is to commence, the total volume of water in gallons (liters) that is to be removed during each draw, and the flow rate at which each draw is to be taken, in gallons (liters) per minute.

TABLE III.1—POINT-OF-USE DRAW PATTERN

Draw No.	Time during test [hh:mm]	Volume [gallons (L)]	Flow rate ** [gpm (Lpm)]
1 *	0:00	2.0 (7.6)	1 (3.8)
2 *	1:00	1.0 (3.8)	1 (3.8)
3 *	1:05	0.5 (1.9)	1 (3.8)
4 *	1:10	0.5 (1.9)	1 (3.8)
5 *	1:15	0.5 (1.9)	1 (3.8)
6	8:00	1.0 (3.8)	1 (3.8)
7	8:15	2.0 (7.6)	1 (3.8)
8	9:00	1.5 (5.7)	1 (3.8)
9	9:15	1.0 (3.8)	1 (3.8)
Total Volume Drawn per Day: 10 gallons (38 L)			

* Denotes draws in first draw cluster.

** Should the water heater have a rated maximum gpm rating less than 1 gpm (3.8 Lpm), then all draws shall be implemented at a flow rate equal to the rated maximum gpm rating

TABLE III.2—LOW-USAGE DRAW PATTERN

Draw No.	Time during test (hh:mm)	Volume (gallons)	Flow rate (gpm)
1 *	0:00	15.0 (56.8)	1.7 (6.4)
2 *	0:30	2.0 (7.6)	1 (3.8)
3 *	1:00	1.0 (3.8)	1 (3.8)
4	10:30	6.0 (22.7)	1.7 (6.4)
5	11:30	4.0 (15.1)	1.7 (6.4)
6	12:00	1.0 (3.8)	1 (3.8)
7	12:45	1.0 (3.8)	1 (3.8)
8	12:50	1.0 (3.8)	1 (3.8)
9	16:15	2.0 (7.6)	1 (3.8)
10	16:45	2.0 (7.6)	1.7 (6.4)
11	17:00	3.0 (11.4)	1.7 (6.4)
Total Volume Drawn per Day: 38 gallons (144 L)			

* Denotes draws in first draw cluster.

TABLE III.3—MEDIUM-USAGE DRAW PATTERN

Draw No.	Time during test (hh:mm)	Volume (gallons)	Flow rate (gpm)
1 *	0:00	15.0 (56.8)	1.7 (6.4)
2 *	0:30	2.0 (7.6)	1 (3.8)
3 *	1:40	9.0 (34.1)	1.7 (6.4)
4	10:30	9.0 (34.1)	1.7 (6.4)
5	11:30	5.0 (18.9)	1.7 (6.4)
6	12:00	1.0 (3.8)	1 (3.8)
7	12:45	1.0 (3.8)	1 (3.8)
8	12:50	1.0 (3.8)	1 (3.8)
9	16:00	1.0 (3.8)	1 (3.8)
10	16:15	2.0 (7.6)	1 (3.8)
11	16:45	2.0 (7.6)	1.7 (6.4)
12	17:00	7.0 (26.5)	1.7 (6.4)
Total Volume Drawn Per Day: 55 gallons (208 L)			

* Denotes draws in first draw cluster.

TABLE III.4—HIGH-USAGE DRAW PATTERN

Draw No.	Time during test (hh:mm)	Volume (gallons)	Flow rate (gpm)
1 *	0:00	27.0 (102)	3 (11.4)
2 *	0:30	2.0 (7.6)	1 (3.8)
3 *	0:40	1.0 (3.8)	1 (3.8)
4 *	1:40	9.0 (34.1)	1.7 (6.4)
5	10:30	15.0 (56.8)	3 (11.4)
6	11:30	5.0 (18.9)	1.7 (6.4)
7	12:00	1.0 (3.8)	1 (3.8)
8	12:45	1.0 (3.8)	1 (3.8)
9	12:50	1.0 (3.8)	1 (3.8)
10	16:00	2.0 (7.6)	1 (3.8)
11	16:15	2.0 (7.6)	1 (3.8)
12	16:30	2.0 (7.6)	1.7 (6.4)
13	16:45	2.0 (7.6)	1.7 (6.4)
14	17:00	14.0 (53.0)	3 (11.4)
Total Volume Drawn Per Day: 84 gallons (318 L)			

* Denotes draws in first draw cluster.

6. Computations

6.1 *Storage Tank and Heat Pump Water Heaters*

6.1.1 *Storage Tank Capacity.* The storage tank capacity, V_{st}, is computed using the following:

$$V_{st} = \frac{(W_f - W_t)}{\rho}$$

Where:

V_{st} = the storage capacity of the water heater, gal (L)

W_f = the weight of the storage tank when completely filled with water, lb (kg)

W_t = the (tare) weight of the storage tank when completely empty, lb (kg)

ρ = the density of water used to fill the tank measured at the temperature of the water, lb/gal (kg/L)

6.1.2 *First-Hour Rating Computation.* For the case in which the final draw is initiated at or prior to an elapsed time of one hour, the first-hour rating, F_{hr}, shall be computed using,

$$F_{hr} = \sum_{i=1}^{n} V_i^*$$

Where:

n = the number of draws that are completed during the first-hour rating test

V^*_i = the volume of water removed during the *i*th draw of the first-hour rating test, gal (L) or, if the mass of water is being measured,

$$V_i^* = \frac{M_i^*}{\rho}$$

Where:

M^*_i = the mass of water removed during the *i*th draw of the first-hour rating test, lb (kg).

ρ = the water density corresponding to the average outlet temperature measured during the *i*th draw, ($\overline{T}^*_{del,i}$), lb/gal (kg/L).

For the case in which a draw is not in progress at the elapsed time of one hour and a final draw is imposed at the elapsed time of one hour, the first-hour rating shall be calculated using

$$F_{hr} = \sum_{i=1}^{n-1} V_i^* + V_n^* \left(\frac{\overline{T}^*_{del,n} - T^*_{min,n-1}}{\overline{T}^*_{del,n-1} - T^*_{min,n-1}} \right)$$

where n and V^*_i are the same quantities as defined above, and

V^*_n = the volume of water drawn during the *n*th (final) draw of the first-hour rating test, gal (L)

$\overline{T}^*_{del,n-1}$ = the average water outlet temperature measured during the *(n-1)*th draw of the first-hour rating test, °F (°C).

$\overline{T}^*_{del,n}$ = the average water outlet temperature measured during the *n*th (final) draw of the first-hour rating test, °F (°C).

$T^*_{min,n-1}$ = the minimum water outlet temperature measured during the *(n-1)*th draw of the first-hour rating test, °F (°C).

6.1.3 *Recovery Efficiency.* The recovery efficiency for gas, oil, and heat pump storage-type water heaters, η_r, is computed as:

$$\eta_r = \frac{M_1 C_{p1}(\overline{T}_{del,1} - \overline{T}_{in,1})}{Q_r} + \frac{V_{st}\rho_2 C_{p2}(\overline{T}_{max,1} - \overline{T}_0)}{Q_r}$$

Where:

M_1 = total mass removed from the start of the 24-hour simulated use test to the end of the first recovery period, lb (kg), or, if the volume of water is being measured,

$M_1 = V_1\rho_1$

Where:

V_1 = total volume removed from the start of the 24-hour simulated use test to the end of the first recovery period, gal (L).

ρ_1 = density of the water at the water temperature measured at the point where the flow volume is measured, lb/gal (kg/L).

C_{p1} = specific heat of the withdrawn water evaluated at $(\overline{T}_{del,1} + \overline{T}_{in,1})/2$, Btu/(lb·°F) (kJ/(kg·°C))

$\overline{T}_{del,1}$ = average water outlet temperature measured during the draws from the start of the 24-hour simulated use test to the end of the first recovery period, °F (°C).

$\overline{T}_{in,1}$ = average water inlet temperature measured during the draws from the start of the 24-hour simulated use test to the end of the first recovery period, °F (°C).
V_{st} = as defined in section 6.1.1.
ρ_2 = density of stored hot water evaluated at $(\overline{T}_{max,1} + \overline{T}_o)/2$, lb/gal (kg/L).
C_{p2} = specific heat of stored hot water evaluated at $(\overline{T}_{max,1} + \overline{T}_o)/2$, Btu/(lb·°F) (kJ/(kg·°C).
$\overline{T}_{max,1}$ = maximum mean tank temperature recorded after cut-out following the first recovery of the 24-hour simulated use test, °F (°C).
$\overline{T}_o$ = maximum mean tank temperature recorded prior to the first draw of the 24-hour simulated use test, °F (°C).
Q_r = the total energy used by the water heater between cut-out prior to the first draw and cut-out following the first recovery period, including auxiliary energy such as pilot lights, pumps, fans, etc., Btu (kJ). (Electrical auxiliary energy shall be converted to thermal energy using the following conversion: 1 kWh = 3412 Btu).

The recovery efficiency for electric water heaters with immersed heating elements is assumed to be 98%.

6.1.4 *Hourly Standby Losses.* The energy consumed as part of the standby loss test of the 24-hour simulated use test, Q_{stby}, is computed as:

$$Q_{stby} = Q_{su,f} - Q_{su,0}$$

Where:

$Q_{su,0}$ = cumulative energy consumption of the water heater from the start of the 24-hour simulated use test to the time at which the maximum mean tank temperature is attained after the recovery following the end of the first draw cluster, Btu (kJ).
$Q_{su,f}$ = cumulative energy consumption of the water heater from the start of the 24-hour simulated use test to the minute prior to the start of the draw following the end of the first draw cluster or the minute prior to a recovery occurring at the start of the draw following the end of the first draw cluster, Btu (kJ).

The hourly standby energy losses are computed as:

$$Q_{hr} = \frac{Q_{stby} - \frac{V_{st}\rho C_p(\overline{T}_{su,f} - \overline{T}_{su,0})}{\eta_r}}{\tau_{stby,1}}$$

Where:

Q_{hr} = the hourly standby energy losses of the water heater, Btu/h (kJ/h).
V_{st} = as defined in section 6.1.1.
ρ = density of stored hot water, $(\overline{T}_{su,f} + \overline{T}_{su,0})/2$, lb/gal (kg/L).
C_p = specific heat of the stored water, $(\overline{T}_{su,f} + \overline{T}_{su,0})/2$, Btu/(lb·F), (kJ/(kg·K))
$\overline{T}_{su,f}$ = the mean tank temperature observed at the minute prior to the start of the draw following the first draw cluster or the minute prior to a recovery occurring at the start of the draw following the end of the first draw cluster, °F (°C).
$\overline{T}_{su,0}$ = the maximum mean tank temperature observed after the first recovery following the final draw of the first draw cluster, °F (°C).
η_r = as defined in section 6.1.3.
$\tau_{stby,1}$ = elapsed time between the time at which the maximum mean tank temperature is observed after the first draw cluster and the minute prior to the start of the first draw following the end of the first draw cluster of the 24-hour simulated use test or the minute prior to a recovery occurring at the start of the draw following the end of the first draw cluster, h.

The standby heat loss coefficient for the tank is computed as:

$$UA = \frac{Q_{hr}}{\overline{T}_{t,stby,1} - \overline{T}_{a,stby,1}}$$

Where:

UA = standby heat loss coefficient of the storage tank, Btu/(h·°F), (kJ/(h·°C).
$\overline{T}_{t,stby,1}$ = overall average storage tank temperature between the time when the maximum mean tank temperature is observed after cut-out following the first draw cluster and the minute prior to commencement of the next draw following the first draw cluster of the 24-hour simulated use test, °F (°C).
$\overline{T}_{a,stby,1}$ = overall average ambient temperature between the time when the maximum mean tank temperature is observed after cut-out following the first draw cluster and the minute prior to commencement of the next draw following the first draw cluster of the 24-hour simulated use test, °F (°C).

6.1.5 *Daily Water Heating Energy Consumption.* The daily water heating energy consumption, Q_d, is computed as:

$$Q_d = Q - \frac{V_{st}\rho C_p(\overline{T}_{24} - \overline{T}_0)}{\eta_r}$$

Where:

$Q = Q_f + Q_e$ = total energy used by the water heater during the 24-hour simulated use test, including auxiliary energy such as pilot lights, pumps, fans, etc., Btu (kJ). (Electrical energy shall be converted to thermal energy using the following conversion: 1kWh = 3412 Btu.)
Q_f = total fossil fuel energy used by the water heater during the 24-hour simulated use test, Btu (kJ).
Q_e = total electrical energy used during the 24-hour simulated use test, Btu (kJ).
V_{st} = as defined in section 6.1.1.
ρ = density of the stored hot water, evaluated at $(\overline{T}_{24} + \overline{T}_0)/2$, lb/gal (kg/L)
C_p = specific heat of the stored water, evaluated at $(\overline{T}_{24} + \overline{T}_0)/2$, Btu/(lb·F), (kJ/(kg·K)).
$\overline{T}_{24}$ = mean tank temperature at the end of the 24-hour simulated use test, °F (°C).
$\overline{T}_0$ = mean tank temperature at the beginning of the 24-hour simulated use test, recorded one minute before the first draw is initiated, °F (°C).
η_r = as defined in section 6.1.3.

6.1.6 *Adjusted Daily Water Heating Energy Consumption.* The adjusted daily water heating energy consumption, Q_{da}, takes into account that the temperature difference between the storage tank and surrounding ambient air may not be the nominal value of 57.5 °F (125 °F − 67.5 °F) or 32.0 °C (51.7 °C − 19.7 °C) due to the 10 °F (5.6 °C) allowable variation in storage tank temperature, 125 °F ± 5 °F (51.7 °C ± 2.8 °C), and the 5 °F (2.8 °C) allowable variation in surrounding ambient temperature 65 °F (18.3 °C) to 70 °C (21.1 °C). The adjusted daily water heating energy consumption is computed as:

$$Q_{da} = Q_d - \left[\left(\overline{T}_{stby,2} - \overline{T}_{a,stby,2}\right) - (125°\text{F} - 67.5°\text{F})\right] UA\, \tau_{stby,2}$$

or,

$$Q_{da} = Q_d - \left[\left(\overline{T}_{stby,2} - \overline{T}_{a,stby,2}\right) - (51.7°\text{C} - 19.7°\text{C})\right] UA\, \tau_{stby,2}$$

Where:

Q_{da} = the adjusted daily water heating energy consumption, Btu (kJ).
Q_d = as defined in section 6.1.5.
$\overline{T}_{stby,2}$ = the mean tank temperature during the total standby portion, $\tau_{stby,2}$, of the 24-hour test, °F (°C).
$\overline{T}_{a,stby,2}$ = the average ambient temperature during the total standby portion, $\tau_{stby,2}$, of the 24-hour test, °F (°C).
UA = as defined in section 6.1.4.

$\tau_{stby,2}$ = the number of hours during the 24-hour simulated test when water is not being withdrawn from the water heater.

A modification is also needed to take into account that the temperature difference between the outlet water temperature and supply water temperature may not be equivalent to the nominal value of 67 °F (125 °F − 58 °F) or 37.3 °C (51.7 °C − 14.4 °C). The following equations adjust the experimental data to a nominal 67 °F (37.3 °C) temperature rise.

The energy used to heat water, Btu/day (kJ/day), may be computed as:

$$Q_{HW} = \sum_{i=1}^{N} \frac{M_i C_{pi}\left(\overline{T}_{del,i} - \overline{T}_{in,i}\right)}{\eta_r}$$

Where:

N = total number of draws in the draw pattern.

M_i = the mass withdrawn for the *i*th draw (i = 1 to N), lb (kg)

C_{pi} = the specific heat of the water of the *i*th draw evaluated at $(\overline{T}_{del,i} + \overline{T}_{in,i})/2$, Btu/(lb·°F) (kJ/(kg·°C)).

$\overline{T}_{del,i}$ = the average water outlet temperature measured during the *i*th draw (i = 1 to N), °F (°C).

$\overline{T}_{in,i}$ = the average water inlet temperature measured during the *i*th draw (i = 1 to N), °F (°C).

η_r = as defined in section 6.1.3.

The energy required to heat the same quantity of water over a 67 °F (37.3 °C) temperature rise, Btu/day (kJ/day), is:

$$Q_{HW,67°F} = \sum_{i=1}^{N} \frac{M_i C_{pi}(125°F - 58°F)}{\eta_r}$$

or

$$Q_{HW,37.3°C} = \sum_{i=1}^{N} \frac{M_i C_{pi}(51.7°C - 14.4°C)}{\eta_r}$$

The difference between these two values is:

$Q_{HWD} = Q_{HW,67\ °F} - Q_{HW}$

or $Q_{HWD} = Q_{HW,37.3\ °C} - Q_{HW}$

This difference (Q_{HWD}) must be added to the adjusted daily water heating energy consumption value. Thus, the daily energy consumption value which takes into account that the temperature difference between the storage tank and ambient temperature may not be 57.5 °F (32.0 °C) and that the temperature rise across the storage tank may not be 67 °F (37.3 °C) is: $Q_{dm} = Q_{da} + Q_{HWD}$

6.1.7 *Energy Factor.* The energy factor, E_f, is computed as:

$$E_f = \sum_{i=1}^{N} \frac{M_i C_{pi}(125°F - 58°F)}{Q_{dm}}$$

or,

$$E_f = \sum_{i=1}^{N} \frac{M_i C_{pi}(51.7°C - 14.4°C)}{Q_{dm}}$$

Where:

N = total number of draws in the draw pattern

Q_{dm} = the modified daily water heating energy consumption as computed in accordance with section 6.1.6, Btu (kJ)

M_i = the mass withdrawn for the *i*th draw (i = 1 to N), lb (kg)

C_{pi} = the specific heat of the water of the *i*th draw, evaluated at (125 °F + 58 °F)/2 = 91.5 °F ((51.7°C + 14.4°C)/2 = 33 °C), Btu/(lb·°F) (kJ/(kg·°C)).

6.1.8 *Annual Energy Consumption.* The annual energy consumption for storage-type and heat pump water heaters is computed as:

$$E_{annual} = 365\ x\ \frac{(V)(\rho)(C_P)(67)}{E_f}$$

Where:

E_f = the energy factor as computed in accordance with section 6.1.8

365 = the number of days in a year

V = the volume of hot water drawn during the applicable draw pattern, gallons
- = 10 for the point-of-use draw pattern
- = 38 for the low usage draw pattern
- = 55 for the medium usage draw pattern
- = 84 for high usage draw pattern

ρ = 8.24 lb_m/gallon, the density of water at 125 °F

C_P = 1.00 Btu/lb_m°F, the specific heat of water at 91.5 °F

67 = the nominal temperature difference between inlet and outlet water

6.1.9 *Annual Electrical Energy Consumption.* The annual electrical energy consumption in kilowatt-hours for storage-type and heat pump water heaters, $E_{annual,e}$, is computed as:

$E_{annual,e} = E_{annual} * (Q_e/Q)/3412$

Where:

E_{annual} = the annual energy consumption as determined in accordance with section 6.1.8, Btu (kJ)

Q_e = the daily electrical energy consumption as defined in section 6.1.5, Btu (kJ).

Q = total energy used by the water heater during the 24-hour simulated use test in accordance with section 6.1.5, Btu (kJ)

3412 = conversion factor from Btu to kWh

6.1.10 *Annual Fossil Fuel Energy Consumption.* The annual fossil fuel energy consumption for storage-type and heat pump water heaters, $E_{annual,f}$, is computed as:

$E_{annual,f} = E_{annual} - (E_{annual,e} \times 3412)$

Where:

E_{annual} = the annual energy consumption as determined in accordance with section 6.1.8, Btu (kJ)

$E_{annual,e}$ = the annual electrical energy consumption as determined in accordance with section 6.1.9, kWh

3412 = conversion factor from kWh to Btu

6.2 *Instantaneous Water Heaters.*

6.2.1 *Maximum gpm (L/min) Rating Computation.* Compute the maximum gpm (L/min) rating, $F_{max,}$ as:

$$F_{max} = \frac{M_{10m}(\overline{T}_{del} - \overline{T}_{in})}{10(\rho)(125°F - 58°F)}$$

or,

$$F_{max} = \frac{M_{10m}(\overline{T}_{del} - \overline{T}_{in})}{10(\rho)(51.7°C - 14.4°C)}$$

which may be expressed as:

$$F_{max} = \frac{M_{10m}(\overline{T}_{del} - \overline{T}_{in})}{10(\rho)(67°F)}$$

or,

$$F_{max} = \frac{M_{10m}(\overline{T}_{del} - \overline{T}_{in})}{10(\rho)(37.3°C)}$$

Where:

M_{10m} = the mass of water collected during the 10-minute test, lb (kg).

$\overline{T}_{del}$ = the average delivery temperature, °F (°C).

$\overline{T}_{in}$ = the average inlet temperature, °F (°C).

ρ = the density of water at the average delivery temperature, lb/gal (kg/L).

If a water meter is used, the maximum gpm (L/min) rating is computed as:

$$F_{max} = \frac{V_{10m}(\overline{T}_{del} - \overline{T}_{in})}{10(67°F)}$$

or,

$$F_{max} = \frac{V_{10m}(\overline{T}_{del} - \overline{T}_{in})}{10(37.3°C)}$$

Where:

V_{10m} = the volume of water measured during the 10-minute test, gal (L).

$\overline{T}_{del}$ = as defined in this section.

$\overline{T}_{in}$ = as defined in this section.

6.2.2 *Recovery Efficiency.* The recovery efficiency, η_r, is computed as:

$$\eta_r = \frac{M_1 C_{p1}(\overline{T}_{del,1} - \overline{T}_{in,1})}{Q_r}$$

Where:

M_1 = total mass removed during the first draw of the 24-hour simulated use test, lb (kg), or, if the volume of water is being measured,

$M_1 = V_1 \cdot \rho$

Where:

V_1 = total volume removed during the first draw of the 24-hour simulated use test, gal (L).

ρ = density of the water at the water temperature measured at the point where the flow volume is measured, lb/gal (kg/L).

C_{p1} = specific heat of the withdrawn water, $(\overline{T}_{del,1} - \overline{T}_{in,1})/2$, Btu/(lb·°F) (kJ/(kg·°C)).

$\overline{T}_{del,1}$ = average water outlet temperature measured during the first draw of the 24-hour simulated use test, °F (°C).

$\overline{T}_{in,1}$ = average water inlet temperature measured during the first draw of the 24-hour simulated use test, °F (°C).

Q_r = the total energy used by the water heater between cut-out prior to the first draw and cut-out following the first draw, including auxiliary energy such as pilot lights, pumps, fans, etc., Btu (kJ). (Electrical auxiliary energy shall be converted to thermal energy using the following conversion: 1 kWh = 3412 Btu.)

6.2.3 Daily Water Heating Energy Consumption. The daily water heating energy consumption, Q_d, is computed as:

$Q_d = Q$

Where:

$Q = Q_f + Q_e$ = the energy used by the instantaneous water heater during the 24-hour simulated use test.

Q_f = total fossil fuel energy used by the water heater during the 24-hour simulated use test, Btu (kJ).

Q_e = total electrical energy used during the 24-hour simulated use test, Btu (kJ).

A modification is needed to take into account that the temperature difference between the outlet water temperature and supply water temperature may not be equivalent to the nominal value of 67 °F (125 °F − 58 °F) or 37.3 °C (51.7 °C − 14.4 °C). The following equations adjust the experimental data to a nominal 67 °F (37.3 °C) temperature rise.

The energy used to heat water may be computed as:

$$Q_{HW} = \sum_{i=1}^{N} \frac{M_i C_{pi}(\overline{T}_{del,i} - \overline{T}_{in,i})}{\eta_r}$$

Where:

N = total number of draws in the draw pattern

M_i = the mass withdrawn for the *i*th draw (*i* = 1 to N), lb (kg)

C_{pi} = the specific heat of the water of the *i*th draw evaluated at $(\overline{T}_{del,i} + \overline{T}_{in,i})/2$, Btu/(lb·°F) (kJ/(kg·°C)).

$\overline{T}_{del,i}$ = the average water outlet temperature measured during the *i*th draw (*i* = 1 to N), °F (°C).

$\overline{T}_{in,i}$ = the average water inlet temperature measured during the *i*th draw (*i* = 1 to N), °F (°C).

η_r = as defined in section 6.2.2.

The energy required to heat the same quantity of water over a 67 °F (37.3 °C) temperature rise is:

$$Q_{HW,67°F} = \sum_{i=1}^{N} \frac{M_i C_{pi}(125°F - 58°F)}{\eta_r}$$

or

$$Q_{HW,37.3°C} = \sum_{i=1}^{N} \frac{M_i C_{pi}(51.7°C - 14.4°C)}{\eta_r}$$

Where:

N = total number of draws in the draw pattern

M_i = the mass withdrawn during the *i*th draw, lb (kg)

C_{pi} = the specific heat of water of the *i*th draw, Btu/(lb·°F) (kJ/(kg·°C))

η_r = as defined in section 6.2.2.

The difference between these two values is:

$Q_{HWD} = Q_{HW,67°F} - Q_{HW}$

or $Q_{HWD} = Q_{HW,37.3°C} - Q_{HW}$

This difference (Q_{HWD}) must be added to the adjusted daily water heating energy consumption value. Thus, the daily energy consumption value, which takes into account that the temperature difference between the storage tank and ambient temperature may not be 57.5 °F (32.0 °C) and that the temperature rise across the storage tank may not be 67 °F (37.3 °C), is:

$Q_{dm} = Q_d + Q_{HWD}$

6.2.4 *Energy Factor.* The energy factor, E_f, is computed as:

$$E_f = \sum_{i=1}^{N} \frac{M_i C_{pi}(125°F - 58°F)}{Q_{dm}}$$

or,

$$E_f = \sum_{i=1}^{N} \frac{M_i C_{pi}(51.7°C - 14.4°C)}{Q_{dm}}$$

Where:

N = total number of draws in the draw pattern

Q_{dm} = the modified daily water heating energy consumption as computed in accordance with section 6.2.3, Btu (kJ)

M_i = the mass withdrawn for the *i*th draw (i = 1 to N), lb (kg)

C_{pi} = the specific heat of the water at the *i*th draw, evaluated at (125 °F + 58 °F)/2 = 91.5 °F ((51.7 °C + 14.4 °C)/2 = 33 °C), Btu/(lb· °F) (kJ/(kg· °C)).

6.2.5 *Annual Energy Consumption.* The annual energy consumption for instantaneous-type water heaters, E_{annual}, is computed as:

$$E_{annual} = 365 \; x \; \frac{(V)(\rho)(C_P)(67)}{E_f}$$

Where:

E_f = the energy factor as computed in accordance with section 6.2.4

365 = the number of days in a year.

V = the volume of hot water drawn during the applicable draw pattern, gallons
= 10 for the point-of-use draw pattern
= 38 for the low usage draw pattern
= 55 for the medium usage draw pattern
= 84 for high usage draw pattern

ρ = 8.24 lb_m/gallon, the density of water at 125 °F

C_P = 1.00 Btu/lb_m °F, the specific heat of water at 91.5 °F

67 = the nominal temperature difference between inlet and outlet water

6.2.6 *Annual Electrical Energy Consumption.* The annual electrical energy consumption in kilowatt-hours for instantaneous-type water heaters, $E_{annual,\ e}$, is computed as:

$E_{annual,e} = E_{annual}*(Q_e/Q)/3412$

Where:

Q_e = the daily electrical energy consumption as defined in section 6.2.3, Btu (kJ)

E_{annual} = the annual energy consumption as determined in accordance with section 6.2.5, Btu (kJ)

Q = total energy used by the water heater during the 24-hour simulated use test in accordance with section 6.2.3, Btu (kJ)

Q_{dm} = the modified daily water heating energy consumption as computed in accordance with section 6.2.3, Btu (kJ)

3412 = conversion factor from Btu to kWh

6.2.7 *Annual Fossil Fuel Energy Consumption.* The annual fossil fuel energy consumption for instantaneous-type water heaters, $E_{annual,f}$, is computed as:

$E_{annual,f} = E_{annual} - (E_{annual,e} \times 3412)$

Where:

$E_{annual,e}$ = the annual electrical energy consumption as defined in section 6.2.6, kWh.

E_{annual} = the annual energy consumption as defined in section 6.2.5, Btu (kJ)

3412 = conversion factor from kWh to Btu

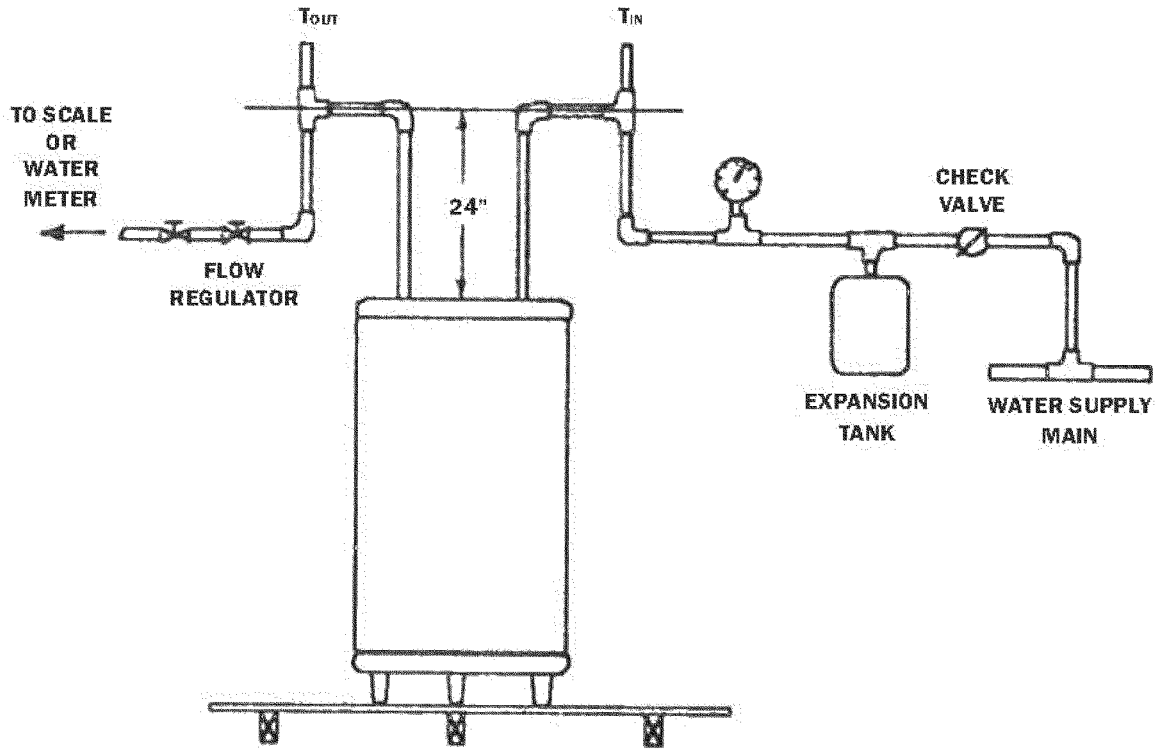

Figure 1.

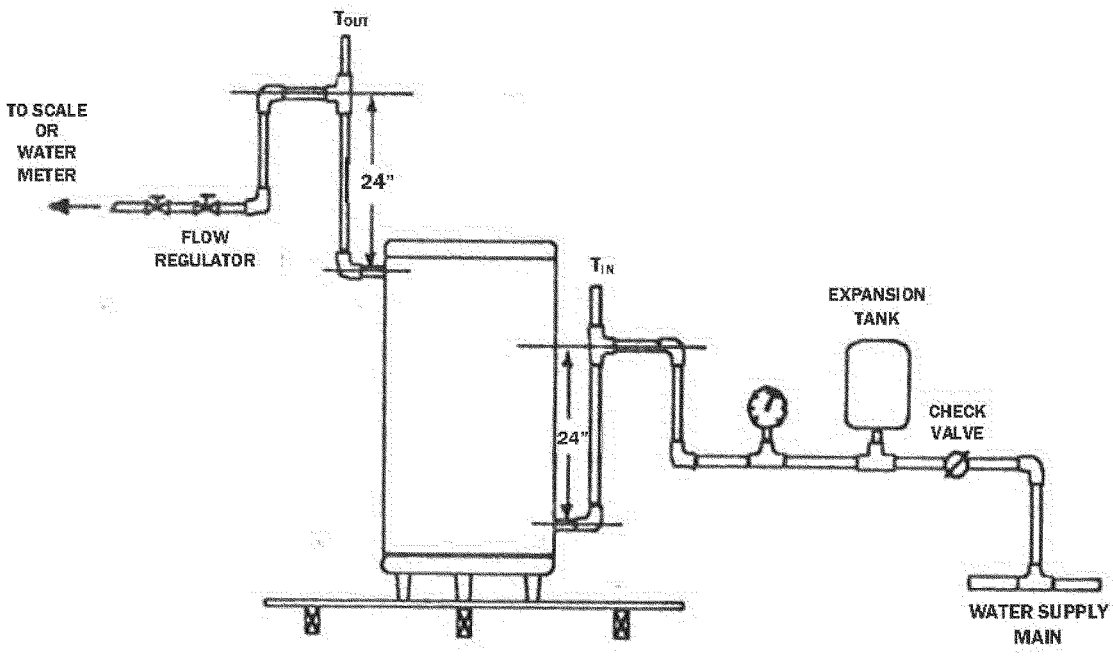

Figure 2.

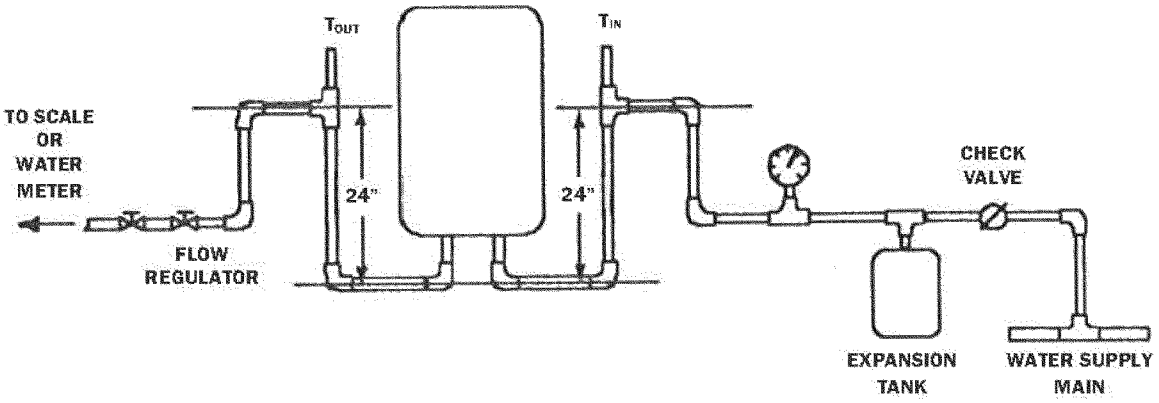

Figure 3.

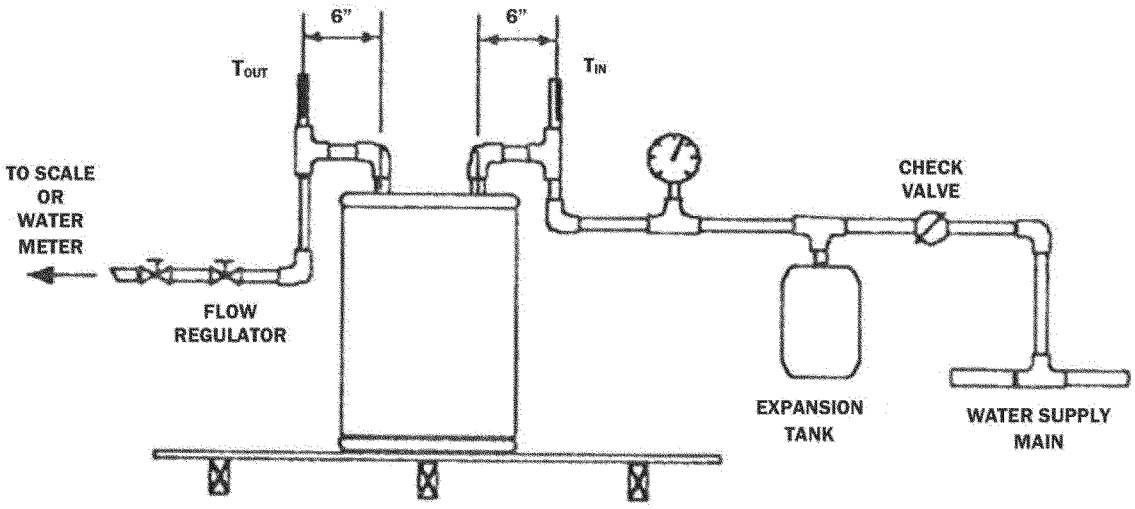

Figure 4.

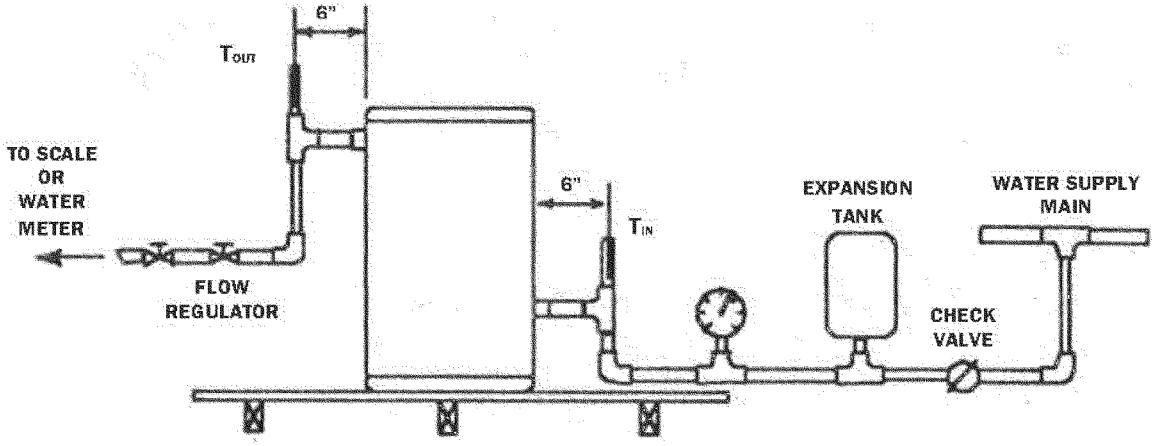

Figure 5.

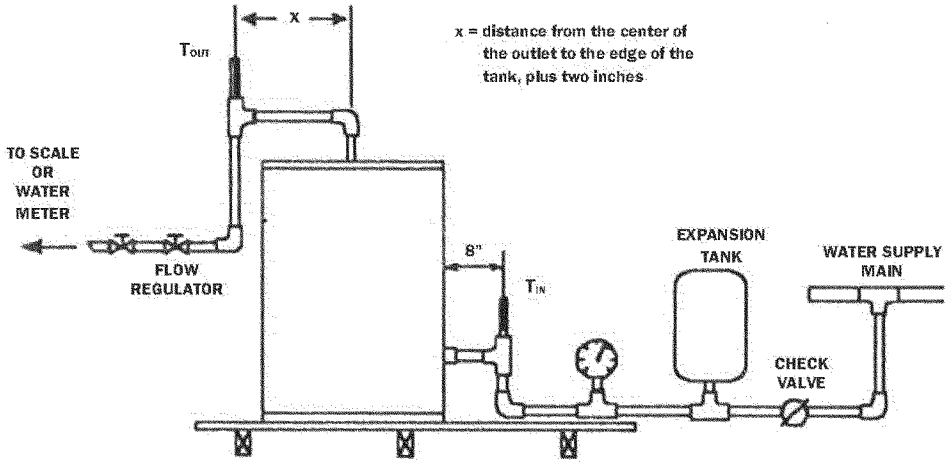

Figure 6.

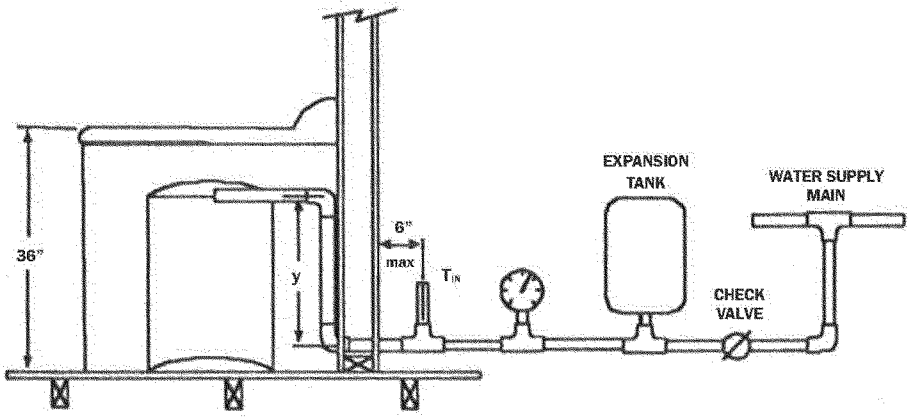

(a)

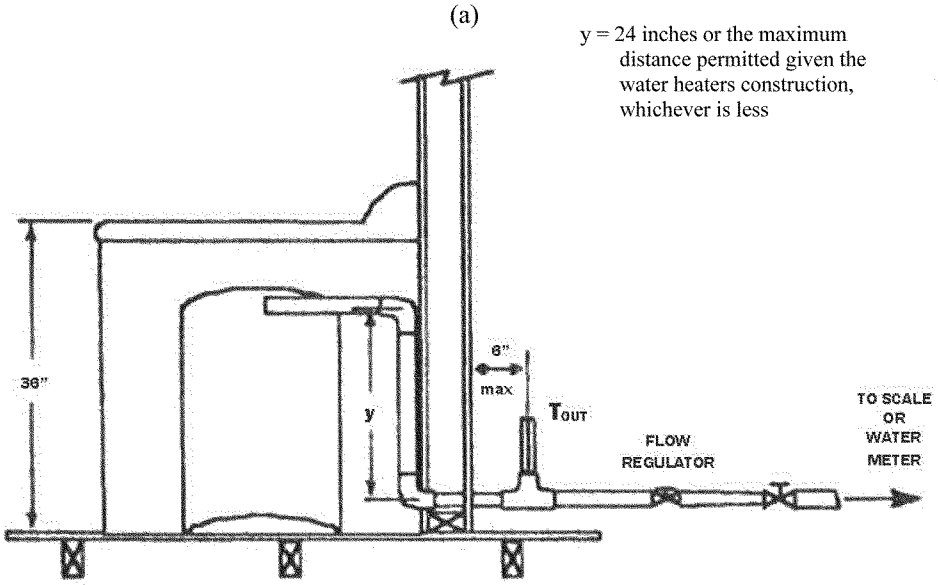

(b)

Figure 7.

* * * * *

■ 10. Section 430.32 is amended by revising paragraph (d) to read as follows:

§ 430.32 Energy and water conservation standards and their compliance dates.

* * * * *

(d) *Water heaters.* The energy factor of water heaters shall not be less than the following for products manufactured on or after the indicated dates.

Product class	Storage volume	Energy factor as of January 20, 2004	Energy factor as of April 16, 2015
Gas-fired Storage Water Heater.	≥ 20 gallons and ≤ 100 gallons.	0.67 − (0.0019 × Rated Storage Volume in gallons).	For tanks with a Rated Storage Volume at or below 55 gallons: EF = 0.675 − (0.0015 × Rated Storage Volume in gallons). For tanks with a Rated Storage Volume above 55 gallons: EF = 0.8012 − (0.00078 × Rated Storage Volume in gallons).
Oil-fired Storage Water Heater.	≤ 50 gallons	0.59 − (0.0019 × Rated Storage Volume in gallons).	EF = 0.68 − (0.0019 × Rated Storage Volume in gallons).
Electric Storage Water Heater.	≥ 20 gallons and ≤ 120 gallons.	0.97 − (0.00132 × Rated Storage Volume in gallons).	For tanks with a Rated Storage Volume at or below 55 gallons: EF = 0.960 − (0.0003 × Rated Storage Volume in gallons). For tanks with a Rated Storage Volume above 55 gallons: EF = 2.057 − (0.00113 × Rated Storage Volume in gallons).
Tabletop Water Heater	≥ 20 gallons and ≤ 120 gallons.	0.93 − (0.00132 × Rated Storage Volume in gallons).	EF = 0.93 − (0.00132 × Rated Storage Volume in gallons).
Instantaneous Gas-fired Water Heater.	< 2 gallons	0.62 − (0.0019 × Rated Storage Volume in gallons).	EF = 0.82 − (0.0019 × Rated Storage Volume in gallons).
Instantaneous Electric Water Heater.	< 2 gallons	0.93 − (0.00132 × Rated Storage Volume in gallons).	EF = 0.93 − (0.00132 × Rated Storage Volume in gallons).

Note: The Rated Storage Volume equals the water storage capacity of a water heater, in gallons, as certified by the manufacturer.

Exclusions. The energy conservation standards shown in this paragraph do not apply to the following types of water heaters: gas-fired, oil-fired, and electric water heaters at or above 2 gallons storage volume and below 20 gallons storage volume; gas-fired water heaters above 100 gallons storage volume; oil-fired water heaters above 50 gallons storage volume; electric water heaters above 120 gallons storage volume; gas-fired instantaneous water heaters at or below 50,000 Btu/h.

* * * * *

PART 431—ENERGY EFFICIENCY PROGRAM FOR CERTAIN COMMERCIAL AND INDUSTRIAL EQUIPMENT

■ 11. The authority citation for part 431 continues to read as follows:

Authority: 42 U.S.C. 6291–6317.

■ 12. Section 431.102 is amended by adding the definition of ''Light commercial water heater,'' in alphabetical order, to read as follows:

§ 431.102 Definitions concerning commercial water heaters, hot water supply boilers, and unfired hot water storage tanks.

* * * * *

Light commercial water heater means any gas-fired, electric, or oil storage or instantaneous commercial water heater that meets the following conditions:

(1) For models requiring electricity, uses single-phase external power supply;

(2) Is not capable of delivering hot water at temperatures of 180 °F or above; and

(3) Does not bear a Code Symbol Stamp signifying compliance with the requirements of the ASME Boiler and Pressure Vessel Code.

* * * * *

■ 13. In § 431.106, paragraph (b), Table 2, is revised to read as follows:

§ 431.106 Uniform test method for the measurement of energy efficiency of commercial water heaters and hot water supply boilers (other than commercial heat pump water heaters).

* * * * *

(b) * * *

TABLE 2 TO § 431.106—TEST PROCEDURES FOR COMMERCIAL WATER HEATERS AND HOT WATER SUPPLY BOILERS

[Other than commercial heat pump water heaters]

Equipment type	Energy efficiency descriptor	Use test set-up, equipment, and procedures in subsection labeled "Method of Test" of	Test procedure required for compliance on and after	With these additional stipulations
Light Commercial Water Heater.	Energy Factor	10 CFR 430, Subpt. B, App. E.	*(insert date 365 days after publication of the final rule in the* **Federal Register** *that establishes a conversion factor, or December 31, 2015, whichever is later).*	None.
Gas-fired Storage and Instantaneous Water Heaters and Hot Water Supply Boilers*.	Thermal Efficiency Standby Loss	ANSI Z21.10.3–2011**, Exhibit G1. ANSI Z21.10.3–2011**, Exhibit G2.	May 13, 2013 May 13, 2013.	A. For all products, the duration of the standby loss test shall be until whichever of the following occurs first after you begin to measure the fuel and/or electric consumption: (1) The first cutout after 24 hours or (2) 48 hours, if the water heater is not in the heating mode at that time.
Oil-fired Storage and Instantaneous Water Heaters and Hot Water Supply Boilers*.	Thermal Efficiency Standby Loss	ANSI Z21.10.3–2011**, Exhibit G1. ANSI Z21.10.3–2011**, Exhibit G2.	May 13, 2013 May 13, 2013.	B. For oil and gas products, the standby loss in Btu per hour must be calculated as follows: SL (Btu per hour) = S (% per hour) × 8.25 (Btu/gal-F) × Measured Volume (gal) × 70 (degrees F).
Electric Storage and Instantaneous Water Heaters.	Standby Loss	ANSI Z21.10.3–2011**, Exhibit G2.	May 13, 2013	C. For oil-fired products, apply the following in conducting the thermal efficiency and standby loss tests: (1) Venting Requirements—Connect a vertical length of flue pipe to the flue gas outlet of sufficient height so as to meet the minimum draft specified by the manufacturer. (2) Oil Supply—Adjust the burner rate so that: (a) The hourly Btu input rate lies within ±2 percent of the manufacturer's specified input rate, (b) the CO_2 reading shows the value specified by the manufacturer, (c) smoke in the flue does not exceed No. 1 smoke as measured by the procedure in ASTM–D–2156–80, and (d) fuel pump pressure lies within ±10 percent of manufacturer's specifications. D. For electric products, apply the following in conducting the standby loss test: (1) Assume that the thermal efficiency (Et) of electric water heaters with immersed heating elements is 98 percent. (2) Maintain the electrical supply voltage to within ±5 percent of the center of the voltage range specified on the water heater nameplate. (3) If the set up includes multiple adjustable thermostats, set the highest one first to yield a maximum water temperature in the specified range as measured by the topmost tank thermocouple. Then set the lower thermostat(s) to yield a maximum mean tank temperature within the specified range. E. Install water-tube water heaters as shown in Figure 2, "Arrangement for Testing Water-tube Type Instantaneous and Circulating Water Heaters."

* As to hot water supply boilers with a capacity of less than 10 gallons, these test methods become mandatory on October 21, 2005. Prior to that time, you may use for these products either (1) these test methods if you rate the product for thermal efficiency, or (2) the test methods in Subpart E if you rate the product for combustion efficiency as a commercial packaged boiler.

** Incorporated by reference, *see* § 431.105.

■ 14. Section 431.107 is added to read as follows:

§ 431.107 Uniform test method for the measurement of energy efficiency of commercial heat pump water heaters.

TABLE 1 TO § 431.107—TEST PROCEDURES FOR COMMERCIAL HEAT PUMP WATER HEATERS

Equipment type	Energy efficiency descriptor	Use test set-up, equipment, and procedures in subsection labeled "Method of Test" of	Test procedure required for compliance on and after
Light Commercial Heat Pump Water Heater with Integrated Storage Tank.	Energy Factor	10 CFR 430, Subpt. B, App. E.	*(insert date 365 days after publication of the final rule in the* **Federal Register** *that establishes a conversion factor, or December 31, 2015, whichever is later)*
All Other Types	[Reserved]	[Reserved]	[Reserved]

[FR Doc. 2013–26268 Filed 11–1–13; 8:45 am]

BILLING CODE 6450–01–P