AUTHENTICATED
U.S. GOVERNMENT
INFORMATION
GPO

FEDERAL REGISTER

Vol. 79 Tuesday,
No. 18 January 28, 2014

Pages 4389–4612

OFFICE OF THE FEDERAL REGISTER

The **FEDERAL REGISTER** (ISSN 0097–6326) is published daily, Monday through Friday, except official holidays, by the Office of the Federal Register, National Archives and Records Administration, Washington, DC 20408, under the Federal Register Act (44 U.S.C. Ch. 15) and the regulations of the Administrative Committee of the Federal Register (1 CFR Ch. I). The Superintendent of Documents, U.S. Government Printing Office, Washington, DC 20402 is the exclusive distributor of the official edition. Periodicals postage is paid at Washington, DC.

The **FEDERAL REGISTER** provides a uniform system for making available to the public regulations and legal notices issued by Federal agencies. These include Presidential proclamations and Executive Orders, Federal agency documents having general applicability and legal effect, documents required to be published by act of Congress, and other Federal agency documents of public interest.

Documents are on file for public inspection in the Office of the Federal Register the day before they are published, unless the issuing agency requests earlier filing. For a list of documents currently on file for public inspection, see *www.ofr.gov.*

The seal of the National Archives and Records Administration authenticates the Federal Register as the official serial publication established under the Federal Register Act. Under 44 U.S.C. 1507, the contents of the **Federal Register** shall be judicially noticed.

The **Federal Register** is published in paper and on 24x microfiche. It is also available online at no charge at *www.fdsys.gov*, a service of the U.S. Government Printing Office.

The online edition of the **Federal Register** is issued under the authority of the Administrative Committee of the Federal Register as the official legal equivalent of the paper and microfiche editions (44 U.S.C. 4101 and 1 CFR 5.10). It is updated by 6:00 a.m. each day the **Federal Register** is published and includes both text and graphics from Volume 59, 1 (January 2, 1994) forward. For more information, contact the GPO Customer Contact Center, U.S. Government Printing Office. Phone 202-512-1800 or 866-512-1800 (toll free). E-mail, *gpocusthelp.com.*

The annual subscription price for the **Federal Register** paper edition is $749 plus postage, or $808, plus postage, for a combined **Federal Register, Federal Register** Index and List of CFR Sections Affected (LSA) subscription; the microfiche edition of the **Federal Register** including the **Federal Register** Index and LSA is $165, plus postage. Six month subscriptions are available for one-half the annual rate. The prevailing postal rates will be applied to orders according to the delivery method requested. The price of a single copy of the daily **Federal Register,** including postage, is based on the number of pages: $11 for an issue containing less than 200 pages; $22 for an issue containing 200 to 400 pages; and $33 for an issue containing more than 400 pages. Single issues of the microfiche edition may be purchased for $3 per copy, including postage. Remit check or money order, made payable to the Superintendent of Documents, or charge to your GPO Deposit Account, VISA, MasterCard, American Express, or Discover. Mail to: U.S. Government Printing Office—New Orders, P.O. Box 979050, St. Louis, MO 63197-9000; or call toll free 1-866-512-1800, DC area 202-512-1800; or go to the U.S. Government Online Bookstore site, see *bookstore.gpo.gov.*

There are no restrictions on the republication of material appearing in the **Federal Register.**

How To Cite This Publication: Use the volume number and the page number. Example: 77 FR 12345.

Postmaster: Send address changes to the Superintendent of Documents, Federal Register, U.S. Government Printing Office, Washington, DC 20402, along with the entire mailing label from the last issue received.

SUBSCRIPTIONS AND COPIES

PUBLIC

Subscriptions:

Paper or fiche	**202–512–1800**
Assistance with public subscriptions	**202–512–1806**

General online information **202–512–1530; 1–888–293–6498**

Single copies/back copies:

Paper or fiche	**202–512–1800**
Assistance with public single copies	**1–866–512–1800 (Toll-Free)**

FEDERAL AGENCIES

Subscriptions:

Paper or fiche	**202–741–6005**
Assistance with Federal agency subscriptions	**202–741–6005**

Printed on recycled paper.

Contents

Federal Register

Vol. 79, No. 18

Tuesday, January 28, 2014

Agriculture Department
See Animal and Plant Health Inspection Service
See Food Safety and Inspection Service

Animal and Plant Health Inspection Service
PROPOSED RULES
Importation of Fresh Bananas From the Philippines into Hawaii and U.S. Territories, 4410–4414
National Poultry Improvement Plan and Auxiliary Provisions, 4538–4567

Antitrust Division
NOTICES
Changes in Membership:
Advanced Media Workflow Association, Inc., 4492–4493
Cable Television Laboratories, Inc., 4493
Members of SGIP 2.0, 4492
PXI Systems Alliance, Inc., 4492
Disclosures:
ASTM International, 4493
National Council of State Boards of Nursing, 4493

Antitrust
See Antitrust Division

Centers for Medicare & Medicaid Services
NOTICES
Privacy Act; Systems of Records, 4473–4474

Children and Families Administration
NOTICES
Agency Information Collection Activities; Proposals, Submissions, and Approvals
Community Services Block Grant Program Model Plan Application, 4474

Civil Rights Commission
NOTICES
Meetings:
Massachusetts Advisory Committee, 4441

Coast Guard
RULES
Safety Zones:
BWRC Southwest Showdown Three; Parker, AZ, 4401–4403
NOTICES
Meetings:
Merchant Marine Personnel Advisory Committee, 4482–4484

Commerce Department
See Foreign-Trade Zones Board
See International Trade Administration
See National Oceanic and Atmospheric Administration
See Patent and Trademark Office
NOTICES
Agency Information Collection Activities; Proposals, Submissions, and Approvals, 4441–4442

Commodity Futures Trading Commission
NOTICES
Meetings:
Global Markets Advisory Committee, 4454
Meetings; Sunshine Act, 4454

Consumer Product Safety Commission
NOTICES
Agency Information Collection Activities; Proposals, Submissions, and Approvals:
Consumer Opinion Forum, 4454–4456

Defense Department
NOTICES
Agency Information Collection Activities; Proposals, Submissions, and Approvals, 4456–4457
Privacy Act; Systems of Records, 4457–4458

Department of Transportation
See Pipeline and Hazardous Materials Safety Administration

Drug Enforcement Administration
PROPOSED RULES
Schedules of Controlled Substances:
Temporary Placement of 10 Synthetic Cathinones into Schedule I, 4429–4433

Education Department
NOTICES
Agency Information Collection Activities; Proposals, Submissions, and Approvals:
American Indian Tribally Controlled Colleges and Universities Program, 4458
Applications for New Awards; Rehabilitation Training:
Rehabilitation Long-Term Training Program—Vocational Rehabilitation Counseling, 4458–4459

Employment and Training Administration
NOTICES
Availability of Funds, Requests for Grant Applications:
Workforce Data Quality Initiative, 4498–4499
Trade Adjustment Assistance; Determinations:
Polyone Designed Structures and Solutions LLC, et al., Donora, PA, 4499
Worker Adjustment Assistance; Amended Certifications:
Boise White Paper, LLC, et al., Interational Falls, MN, 4501
Caterpillar Reman Powertrain Services, Inc., et al., Summerville, SC, 4499–4501
Osram Sylvania, Inc., et al., St. Marys and York, PA, 4500
Worker Adjustment Assistance; Determinations, 4501–4504
Worker Adjustment Assistance; Investigations, 4504–4505

Employment Standards Administration
See Wage and Hour Division

Energy Department
See Federal Energy Regulatory Commission
NOTICES
Meetings:
Environmental Management Site-Specific Advisory Board, Northern New Mexico, 4459–4460

Environmental Management Site-Specific Advisory Board, Oak Ridge Reservation, 4459
Environmental Management Site-Specific Advisory Board, Portsmouth, 4460–4461

Environmental Protection Agency
RULES
Air Quality State Implementation Plans; Approvals and Promulgations:
Alabama; Attainment Plan for the Troy Area 2008 Lead Nonattainment Area, 4407–4409
Changes to Dispute Procedures, 4403–4407
PROPOSED RULES
Air Quality State Implementation Plans; Approvals and Promulgations:
Louisiana; Interstate Transport of Fine Particulate Matter, 4436–4438
Standards of Performance for Greenhouse Gas Emissions for New Stationary Sources:
Electric Utility Generating Units, 4439
NOTICES
Amended Settlements:
Georgia-Pacific Hardwood Site, Plymouth, Washington County, NC, 4464–4465
Requests for Nominations:
Experts to Augment Science Advisory Board Chemical Assessment Advisory Committee Review of Benzo[a]pyrene, 4465–4466

Equal Employment Opportunity Commission
NOTICES
Agency Information Collection Activities; Proposals, Submissions, and Approvals, 4466–4467

Executive Office of the President
See Presidential Documents
See Trade Representative, Office of United States

Export-Import Bank
NOTICES
Agency Information Collection Activities; Proposals, Submissions, and Approvals, 4467

Federal Aviation Administration
NOTICES
Noise Compatibility Programs:
Willow Run Airport, Ypsilanti, MI, 4528–4529
Requests to Release Airport Properties, 4529
Requests to Release Deed Restrictions
Yellowstone Airport, West Yellowstone, MT, 4529–4530

Federal Deposit Insurance Corporation
NOTICES
Agency Information Collection Activities; Proposals, Submissions, and Approvals:
Guidance on Sound Incentive Compensation Policies, 4467–4468

Federal Election Commission
NOTICES
Meetings; Sunshine Act, 4468

Federal Energy Regulatory Commission
NOTICES
Combined Filings, 4461–4463
Environmental Assessments; Availability, etc.:
Lock Plus Hydro Friends Fund XLII, LLC, 4463
Staff Attendances, 4463–4464

Federal Housing Enterprise Oversight Office
RULES
Executive Compensation, 4389–4394

Federal Housing Finance Agency
RULES
Executive Compensation, 4389–4394
Golden Parachute Payments, 4394–4401
PROPOSED RULES
Responsibilities of Boards of Directors:
Corporate Practices and Corporate Governance Matters, 4414–4429

Federal Housing Finance Board
PROPOSED RULES
Responsibilities of Boards of Directors:
Corporate Practices and Corporate Governance Matters, 4414–4429

Federal Motor Carrier Safety Administration
NOTICES
Meetings:
Motor Carrier Safety Advisory Committee and Subcommittee, 4530–4531
Qualification of Drivers; Exemption Applications:
Vision, 4531–4532

Federal Reserve System
NOTICES
Agency Information Collection Activities; Proposals, Submissions, and Approvals, 4468–4472
Changes in Bank Control:
Acquisitions of Shares of a Bank or Bank Holding Company, 4472
Formations of, Acquisitions by, and Mergers of Bank Holding Companies, 4472–4473

Fish and Wildlife Service
NOTICES
Agency Information Collection Activities; Proposals, Submissions, and Approvals:
Incidental Take of Marine Mammals; Oil and Gas Industry Activities, 4488–4489
Injurious Wildlife; Importation Certification for Live Fish and Fish Eggs, 4487–4488

Food Safety and Inspection Service
NOTICES
Meetings:
Codex Alimentarius Commission; Codex Committee on Fish and Fish Products, 4440–4441

Foreign Assets Control Office
NOTICES
Designations, Foreign Narcotics Kingpin Designation Act, 4535–4536

Foreign-Trade Zones Board
NOTICES
Proposed Production Activities:
Foreign-Trade Zone 49; Western Carriers, Inc., Foreign-Trade Zone 49, North Bergen, NJ, 4442

Health and Human Services Department
See Centers for Medicare & Medicaid Services
See Children and Families Administration
See Health Resources and Services Administration
See National Institutes of Health

Health Resources and Services Administration
NOTICES
Agency Information Collection Activities; Proposals, Submissions, and Approvals, 4474–4478

Homeland Security Department
See Coast Guard
See U.S. Customs and Border Protection
NOTICES
Meetings:
Presidents National Security Telecommunications Advisory Committee, 4482

Housing and Urban Development Department
See Federal Housing Enterprise Oversight Office
PROPOSED RULES
Responsibilities of Boards of Directors:
Corporate Practices and Corporate Governance Matters, 4414–4429
NOTICES
Proposed Changes to the Survey of New Manufactured (Mobile) Home Placements Data Collection Methodology, 4485–4487

Interior Department
See Fish and Wildlife Service
See Land Management Bureau

International Trade Administration
NOTICES
Court Decision Not in Harmony with Final Determination of Sales at Less Than Fair Value, etc.:
Polyvinyl Alcohol from Taiwan, 4442–4443
Meetings:
Advisory Committee on Supply Chain Competitiveness, 4443
Secretarial Energy Business Development Mission to West Africa, 4443–4447
Trade Mission to the Caribbean Region, 4447–4450

International Trade Commission
NOTICES
Investigations:
Certain Vision-Based Driver Assistance System Cameras and Components Thereof, 4490–4491

Justice Department
See Antitrust Division
See Drug Enforcement Administration
See Parole Commission
NOTICES
Proposed Consent Decrees under CERCLA, 4491–4492

Labor Department
See Employment and Training Administration
See Veterans Employment and Training Service
See Wage and Hour Division
NOTICES
Agency Information Collection Activities; Proposals, Submissions, and Approvals:
Current Population Survey—Basic Labor Force, 4498
Health Standards for Diesel Particulate Matter Exposure in Underground Coal Mines, 4497–4498
Nonmonetary Determination Activity Report, 4496
Request; Job Corps Health Questionnaire, 4494
Safety Defects — Examination, Correction, and Records, 4494–4496

Land Management Bureau
NOTICES
Meetings:
Gateway West Project Subcommittee of the Resource Advisory Council; Boise District, 4489–4490
Rio Grande Natural Area Commission, 4489
Plats of Surveys:
Wyoming, 4490

National Credit Union Administration
NOTICES
Agency Information Collection Activities; Proposals, Submissions, and Approvals, 4509–4510

National Highway Traffic Safety Administration
PROPOSED RULES
Federal Motor Vehicle Safety Standards:
Child Restraint Systems—Side Impact Protection, Incorporation by Reference, 4570–4608

National Institutes of Health
NOTICES
Agency Information Collection Activities; Proposals, Submissions, and Approvals:
Multidisciplinary Treatment Planning within the National Cancer Institute Community Cancer Centers Program, 4478–4479
Meetings:
Center for Scientific Review, 4479–4482

National Oceanic and Atmospheric Administration
NOTICES
Agency Information Collection Activities; Proposals, Submissions, and Approvals:
Alaska Region Crab Permits, 4450–4451
Meetings:
Proposed Heeia Site for a National Estuarine Research Reserve in Hawaii, 4451

Nuclear Regulatory Commission
NOTICES
Inspections, Tests, Analyses, and Acceptance Criteria:
Vogtle Unit 3 Combined License, 4510–4511
Meetings; Sunshine Act, 4511

Office of Federal Housing Enterprise Oversight
See Federal Housing Enterprise Oversight Office

Office of United States Trade Representative
See Trade Representative, Office of United States

Parole Commission
NOTICES
Meetings; Sunshine Act, 4493–4494

Patent and Trademark Office
NOTICES
Agency Information Collection Activities; Proposals, Submissions, and Approvals, 4451–4452
Agency Information Collection Activities; Proposals, Submissions, and Approvals:
Response to Office Action and Voluntary Amendment Forms, 4452–4454

Personnel Management Office
NOTICES
Agency Information Collection Activities; Proposals, Submissions, and Approvals:
USAJOBS, 4511

Pipeline and Hazardous Materials Safety Administration
NOTICES
Improvements in Preparing Oil Spill Facility Response Plans, 4532–4534

Presidential Documents
ADMINISTRATIVE ORDERS
International Atomic Energy Agency, Agreement With U.S.; Proposed Third Amendment (Presidential Determination)
No. 2014–07 of January 17, 2014, 4609–4611

Saint Lawrence Seaway Development Corporation
PROPOSED RULES
Seaway Regulations and Rules; Update, 4433–4436

Securities and Exchange Commission
NOTICES
Self-Regulatory Organizations; Proposed Rule Changes:
International Securities Exchange, LLC, 4512–4515
NYSE Arca, Inc., 4515–4519
Trading Suspension Orders:
Advanced Pipe Fitting Technologies Inc., 4519
Jinhao Motor Co., 4519
New Dragon Asia Corp., 4519

Social Security Administration
NOTICES
Addresses for Service of Process, 4519–4522

State Department
NOTICES
Certain Temporary and Limited Sanctions Relief:
Joint Plan of Action of November 24, between the P5 plus 1 and the Islamic Republic of Iran, 4522–4524

Trade Representative, Office of United States
NOTICES
Applications:
Inclusion on the Dispute Settlement Rosters for US – Panama Trade Promotion Agreement, 4524–4526

Transportation Department
See Federal Aviation Administration
See Federal Motor Carrier Safety Administration
See National Highway Traffic Safety Administration
See Pipeline and Hazardous Materials Safety Administration
See Saint Lawrence Seaway Development Corporation
NOTICES
Applications for Certificates of Public Convenience and Necessity and Foreign Air Carrier Permits, 4526–4527
Meetings:
National Freight Advisory Committee; Webinar, 4527

Treasury Department
See Foreign Assets Control Office
NOTICES
Agency Information Collection Activities; Proposals, Submissions, and Approvals, 4534–4535

U.S. Customs and Border Protection
NOTICES
Agency Information Collection Activities; Proposals, Submissions, and Approvals:
Commercial Invoice, 4485
Importer ID Input Record, 4484–4485

U.S.–China Economic and Security Review Commission
NOTICES
Meetings, 4536

Veterans Employment and Training Service
NOTICES
Stand Down Grant Requests; FY 2014 through 2016, 4505–4508

Wage and Hour Division
NOTICES
Proposed Extension of the Information Collection Disclosure to Workers:
Disclosure to Workers Under the Migrant and Seasonal Agricultural Worker Protection Act, 4508–4509

Separate Parts In This Issue

Part II
Agriculture Department, Animal and Plant Health Inspection Service, 4538–4567

Part III
Transportation Department, National Highway Traffic Safety Administration, 4570–4608

Part IV
Presidential Documents, 4609–4611

Reader Aids

Consult the Reader Aids section at the end of this page for phone numbers, online resources, finding aids, reminders, and notice of recently enacted public laws.

To subscribe to the Federal Register Table of Contents LISTSERV electronic mailing list, go to http://listserv.access.gpo.gov and select Online mailing list archives, FEDREGTOC-L, Join or leave the list (or change settings); then follow the instructions.

CFR PARTS AFFECTED IN THIS ISSUE

A cumulative list of the parts affected this month can be found in the Reader Aids section at the end of this issue.

3 CFR

Administrative Orders:

Presidential Determinations:

No. 2014–07 of January 17, 2014 4611

7 CFR

Proposed Rules:

319 4410

9 CFR

Proposed Rules:

56 4538
145 4538
146 4538
147 4538

12 CFR

1230 4389
1231 4394
1770 4389

Proposed Rules:

914 4414
917 4414
1236 4414
1239 4414
1710 4414
1720 4414

21 CFR

Proposed Rules:

1308 4429

33 CFR

165 4401

Proposed Rules:

401 4433

40 CFR

30 4403
31 4403
52 4407

Proposed Rules:

52 4436
63 4439

49 CFR

Proposed Rules:

571 4570

Rules and Regulations

Federal Register

Vol. 79, No. 18

Tuesday, January 28, 2014

This section of the FEDERAL REGISTER contains regulatory documents having general applicability and legal effect, most of which are keyed to and codified in the Code of Federal Regulations, which is published under 50 titles pursuant to 44 U.S.C. 1510.

The Code of Federal Regulations is sold by the Superintendent of Documents. Prices of new books are listed in the first FEDERAL REGISTER issue of each week.

FEDERAL HOUSING FINANCE AGENCY

12 CFR Part 1230

DEPARTMENT OF HOUSING AND URBAN DEVELOPMENT

Office of Federal Housing Enterprise Oversight

12 CFR Part 1770

RIN 2590–AA12

Executive Compensation

AGENCY: Federal Housing Finance Agency; Office of Federal Housing Enterprise Oversight, HUD.

ACTION: Final rule.

SUMMARY: The Federal Housing Finance Agency (FHFA) is issuing a final rule that sets forth requirements and processes with respect to compensation provided to executive officers by the Federal National Mortgage Association, the Federal Home Loan Mortgage Corporation, the Federal Home Loan Banks, and the Federal Home Loan Bank System's Office of Finance, consistent with the safety and soundness responsibilities of FHFA under the Federal Housing Enterprises Financial Safety and Soundness Act of 1992, as amended by the Housing and Economic Recovery Act of 2008. This final rule affirms the establishment of 12 CFR part 1230 and removal of 12 CFR part 1770 by the interim final rule that is already in effect.

DATES: The final rule is effective February 27, 2014. For additional information see **SUPPLEMENTARY INFORMATION.**

FOR FURTHER INFORMATION CONTACT: Alfred M. Pollard, General Counsel, (202) 649–3050, *Alfred.Pollard@fhfa.gov,* or Lindsay Simmons, Assistant General Counsel, (202) 649–3066, *Lindsay.Simmons@fhfa.gov,* (not toll-free numbers), Federal Housing Finance Agency, Eighth Floor, 400 Seventh Street SW., Washington, DC 20024. The telephone number for the Telecommunications Device for the Hearing Impaired is (800) 877–8339.

SUPPLEMENTARY INFORMATION:

I. Background

FHFA published an interim final rule with request for comments on Executive Compensation on May 14, 2013 (74 FR 28442). The public notice and comment period closed on July 15, 2013. The interim final rule superseded the Office of Federal Housing Enterprise Oversight (OFHEO) Executive Compensation rule, 12 CFR part 1770.[1] This rule finalizes the interim final rule and responds to comments received.

This final rule implements section 1113 of the Housing and Economic Recovery Act of 2008 (HERA), Public Law 110–289, 122 Stat. 2654. Section 1113, which amended section 1318 of the Federal Housing Enterprises Financial Safety and Soundness Act (Safety and Soundness Act) (12 U.S.C. 4518), requires the Director to prohibit and withhold compensation of executive officers of the Federal National Mortgage Association, the Federal Home Loan Mortgage Corporation (collectively, the Enterprises), and the Federal Home Loan Banks (Banks) (collectively, the regulated entities).

FHFA issues this final rule also to continue the requirement under the charter acts of the Enterprises that the Director approve any agreements or contracts of executive officers that provide compensation in connection with termination of employment.[2] No similar prior approval requirement for the Director over termination benefits for executive officers of the Banks is contained in the Federal Home Loan Bank Act or the Safety and Soundness Act, but the total payment or value derived from termination benefits is included in FHFA's review of compensation provided by the Banks to their executive officers, in order to determine whether the overall compensation is reasonable and comparable. This is because FHFA considers the term ''compensation'' to include benefits to an executive officer that are derived from post-employment benefit plans or programs and other compensatory benefit arrangements containing termination benefits, which affect the executive officer individually or as part of a group. As a result, FHFA reviews the value of benefits provided under such plans, programs, and arrangements on an ongoing basis in exercising its compensation review authority. FHFA aggregates the benefits provided under such plans, programs, and arrangements with all other payments of money or any other thing of current or potential value to determine whether an officer's overall compensation is reasonable and comparable.[3] FHFA may also determine that a particular element of compensation is not reasonable or comparable. For example, incentive compensation that provides incentives for unsound risk management could be prohibited on that basis.

This final rule, like the interim final rule, reflects the enactment of the Stop Trading on Congressional Knowledge Act (the ''STOCK Act''), which followed FHFA's issuance of the proposed rule.[4] Section 16 of the STOCK Act prohibits senior executives of any Enterprise in conservatorship from receiving bonuses during any period of conservatorship on or after the date of enactment. Section 1230.3(a) in the interim final rule and in this final rule includes this statutory prohibition. On March 9, 2012, FHFA announced new executive compensation programs for the Enterprises, in its capacity as conservator.[5] These programs eliminate bonuses for Enterprise senior executives (and other executives) and thus comply with Section 16 of the STOCK Act.

Additionally, FHFA is adopting this final rule to ensure that the regulated

[1] FHFA is continuing its work to merge existing regulations of its predecessor agencies (OFHEO and the Federal Housing Finance Board), and will consider the appropriate disposition of an OFHEO corporate governance provision related to compensation of directors, executive officers, and employees (at 12 CFR 1710.13), and the relationship of that provision to this final rule, in conjunction with that project.

[2] *See* section 309(d)(3)(B) of the Federal National Mortgage Association Charter Act (12 U.S.C. 1723a (d)(3)(B)) and section 303(h)(2) of the Federal Home Loan Mortgage Corporation Act (12 U.S.C. 1452(h)(2)).

[3] *See* 74 FR at 26990 (June 5, 2009).

[4] *See* Public Law 112–105, 126 Stat. 291 (April 4, 2012) (codified at 12 U.S.C. 4518a).

[5] *See* News Release dated March 9, 2012, at *http://www.fhfa.gov/webfiles/23438/ExecComp3912F.pdf.*

entities and the Office of Finance (OF) comply with processes used by FHFA in its oversight of executive compensation. The processes require the submission of relevant information by the regulated entities and OF on a timely basis, in a format deemed appropriate by FHFA, to enable FHFA to efficiently carry out its executive compensation functions. For reasons noted above, as with the Enterprises, information required to be submitted to FHFA for its review and consideration by the Banks includes information relating to compensation for services during employment and to termination benefits for their executive officers.

FHFA had adopted the interim final rule to provide an opportunity for additional comment in view of certain revisions to the proposed rule. Further details about comments received and FHFA's responses can be found below.

FHFA has conducted a separate rulemaking regarding golden parachute payments. Section 1114 of HERA further amended section 1318 of the Safety and Soundness Act (12 U.S.C. 4518) to authorize the Director to prohibit or limit golden parachute payments and indemnification payments by the Enterprises and the Banks to entity-affiliated parties. Pursuant to this authority, FHFA adopted a final rule on golden parachute payments in 2009, [6] setting forth factors to be considered by the Director of FHFA when exercising authority to limit golden parachute payments that are paid to entity-affiliated parties of a regulated entity or OF. Subsequently, FHFA proposed amendments to the final golden parachute payments rule to address in more detail prohibited and permissible golden parachute payments.[7] Today, FHFA also publishes in this issue of the **Federal Register** a final amendment of the rule on golden parachute payments.

FHFA recently adopted a rule setting forth definitions of terms commonly used in its regulations, and has removed duplicative definitions in this final rule.[8]

II. Comments on the Interim Final Rule

FHFA received comments from one member of the public, and from the twelve Federal Home Loan Banks and the Office of Finance. FHFA considered all of the comments submitted, and explains its responses below.

Rule's Effect on Compensation

The Banks made two comments regarding FHFA's review of compensation that are similar to or continue comments they had made previously in response to the proposed rule. The first is the Banks' allegation that the rule in effect prescribes a level or range of executive compensation. The second is that FHFA's review ''in whole or in part'' should instead be review ''taken as a whole.''

Congress provided in 12 U.S.C. 4518(d) that FHFA is not to prescribe or set specific levels or ranges of compensation. Congress required, however, that FHFA determine whether compensation is reasonable and comparable with compensation for employment in other similar businesses involving similar duties and responsibilities. Accordingly, FHFA has defined the terms ''reasonable'' and ''comparable'' and has implemented the Congressional mandate in § 1230.3(a) as follows: ''No regulated entity or the Office of Finance shall pay compensation to an executive officer that is not reasonable and comparable with compensation paid by such similar businesses involving similar duties and responsibilities.''

The Banks argued that, despite changes FHFA made in the interim final rule in response to comments the Banks made on the proposed rule, the interim final rule allows FHFA to prescribe or set a specific level or range of compensation, contrary to the statute. The Banks argue that three provisions in combination create this result. First, as stated above, FHFA implemented the Congressional mandate in § 1230.3(a) of the rule to state that regulated entities and the OF may not pay compensation that is not reasonable and comparable according to the statute. Second, the interim final rule defines ''comparable'' as ''compensation that, taking in whole or in part, does not materially exceed compensation paid at institutions of similar size and function for similar duties and responsibilities.'' Finally, in its discussion of the proposed rule and of the interim final rule, FHFA identified the Farm Credit Banks and Federal Reserve Banks as examples that may appropriately be included as points of reference in assessing reasonableness and comparability of compensation at the Federal Home Loan Banks. The Banks assert that these provisions in effect (i) prohibit the Banks from paying compensation that is not ''reasonable'' and ''comparable'' in a manner that prescribes or sets a specific level of range of compensation, (ii) impose a presumptive cap of ''not materially exceed[ing]'' compensation at similar institutions, and (iii) designate particular comparator institutions that will determine compliance with the rule.

FHFA has responded to the Banks' stated concerns on this subject in this rulemaking, including making changes to the rule in response to the Banks' previous comments, and must now reject this final comment as being no more persuasive than the previous comments, to which FHFA has already adequately responded.[9] The first of the three provisions the Banks' find objectionable, in § 1230.3(a), is a reasonable implementation of the Congressional mandate in the statute and in no way authorizes FHFA to set compensation or a range of compensation.

FHFA defined the term ''comparable'' in the way it deems to be closest to Congressional intent, true to the meaning of the word in plain English, and supported by market usage of the term. Comparison with similar positions at similar institutions is a common practice for setting compensation. It appears clear that a statutory requirement of comparability would need to operate as a check on compensation that materially exceeds compensation for comparable duties and responsibilities at comparable institutions. Even so, FHFA avoided translating this requirement into specific mandates to create a certain peer group of a certain size, or even use of a certain process to create the group of comparators, which could have limited the flexibility of the Banks in implementing the mandate. FHFA reviews comparability while also respecting the Banks' processes for setting compensation. This review results in no specific level of compensation, nor a range, communicated from FHFA to the regulated entities or OF, in practice or in effect.

FHFA continues to believe that the Farm Credit Banks and the Federal Reserve Banks are relevant points of reference in assessing the reasonableness and comparability of Bank compensation, because they have certain points in common with the Federal Home Loan Banks: they are government-sponsored financial institutions; they have some measure of government backing and therefore a potentially different risk profile than non-government-sponsored institutions; and they do not issue publicly traded stock that can be used as an element of long-term compensation and therefore

[6] Golden Parachute Payments, 74 FR 5101 (January 29, 2009), codified at 12 CFR part 1231.

[7] Golden Parachute and Indemnification Payments Proposed Rule, 74 FR 30975 (June 29, 2009).

[8] *See* 12 CFR 1201.1.

[9] 78 FR 28442, 28444–45 (May 14, 2013).

must structure their compensation differently from publicly traded companies. For these reasons it would be wrong to ignore the Farm Credit Banks and the Federal Reserve Banks. While the Banks' comment letters have correctly pointed out differences between them and the Farm Credit Banks and the Federal Reserve Banks, there are also key differences between the Federal Home Loan Banks and the commercial banks and similar institutions that the Banks have identified as their comparators. The fact is that there are no institutions that are exactly comparable to the Federal Home Loan Banks.

FHFA had included these points in its previous response [10] to the Banks' previous comments and the Banks did not in their most recent comment letter to the interim final rule provide any additional responsive arguments about the appropriateness of comparability with the Farm Credit Banks and the Federal Reserve Banks. FHFA maintains that suggesting these entities be included as points of reference among a group of comparators is fully responsive to its Congressional mandate to determine whether compensation is comparable to that of similar businesses with similar duties and responsibilities, and that doing so does not result in setting a specific level or range of compensation.

The unique member-controlled cooperative structure of the Federal Home Loan Bank system was in place as of the time that Congress created the statute that mandates FHFA's review for reasonableness and comparability of compensation, and therefore cannot be adduced as a basis for FHFA to abandon its role to review as the statute intended, including for comparability with similar institutions, despite the unique structure in place at the Banks.

FHFA received an additional comment from the Banks, noting that FHFA had rejected the Banks' previous comment that FHFA's review of executive compensation should be based on compensation that is ''taken as a whole'' rather than ''in whole or in part.'' The Banks had stated their belief that if an executive's compensation package taken as a whole is reasonable and comparable to compensation at similar institutions for similar duties, FHFA should not be permitted to reject a discrete element of an executive's compensation as excessive. They have further requested in response to the interim final rule that FHFA recognize that the Banks are more restricted than other large financial institutions in methods that they can use to compensate their executives. For example, the Banks are unable to offer stock-related executive compensation because they do not have publicly traded stock. The Banks requested that FHFA take these distinguishing factors into consideration.

FHFA responded to that earlier comment that in its ongoing oversight of an executive's overall compensation, FHFA reviews all components that compose the broadly defined term ''compensation.'' [11] If any component's value is determined to be an outlier, it may still be acceptable given the compensation taken as a whole. On the other hand, it may also be deemed excessive by itself if it creates questionable incentives, or in other ways draws undue negative attention to itself. FHFA will advise the entity if it finds the aggregate compensation package to be excessive. FHFA may specifically note that a particular component appears to be the source of the problem and should be reassessed by the entity in order to align the total package with the reasonable and comparable standard. For these reasons, FHFA has determined to retain the language, which is currently effective in the interim final rule, in this final rule as well. FHFA assures the Banks that it does take into account the particular circumstances of the Banks in reviewing executive compensation. FHFA is well aware that the Banks do not have publicly traded stock and pay compensation in cash.

FHFA recognizes that executive compensation oversight mandated by HERA has resulted in a new area of regulatory compliance for the Banks. For that reason, in addition to guidance, FHFA staff will continue to work directly with the relevant staff, committees, and boards of the Banks to ensure that FHFA's review process is well understood. FHFA guidance and dialogue between staffs will, among other things, address concerns raised by the Banks regarding how the provisions of the rule will operate under specific circumstances.

Status as an Executive Officer

The Banks requested that the term ''executive officer'' apply only to those individuals who qualify as executive officers as of the time of a required notice regarding such individual's compensation. The **SUPPLEMENTARY INFORMATION** to the interim final rule states that ''[a]n executive officer for purposes of this regulation would cover officers who were NEOs at the Bank's last filing, who would be NEOs if the filing occurred today, and those expected to be NEOs in the future based on current title, duties, or pay. (Consequently, the total number of NEOs at any time may be more than five.)''

In order to address the Banks' request, FHFA has determined to narrow its interpretation described above in the Supplementary Information to the interim final rule. FHFA will apply the definition more narrowly, in a manner which is intended to address the concern expressed by the Banks, and which is reflective of the plain meaning of the regulatory text. With respect to the Banks, the definition of ''executive officer'' adopts the language of the SEC's Regulation S–K, 17 CFR 229.402(a)(3), and therefore covers a Bank's most highly compensated officers (generally referred to as the ''top 5'') who are designated under SEC disclosure requirements as ''Named Executive Officers'' (NEOs).

It is FHFA's intent to provide clarity and avoid undue burden on the Banks by following the definition and practice of the SEC for identifying NEOs in its definition for ''executive officer.'' However, this final rule includes requirements that apply to ''executive officers'' throughout the year, and not just at the time of securities filings. Therefore, for purposes of clarification, and in response to the request of the Banks, FHFA is now narrowing its interpretation that was previously provided in the **SUPPLEMENTARY INFORMATION** to the interim final rule as to how the definition of executive officer applies.

The definition of ''executive officer'' applies to a person who qualifies as an ''executive officer'' as of the time of a required notice under § 1230.3(d)(1)–(4). In effect, this means that the ''top 5'' determined for purposes of securities filings[12] will remain the ''top 5'' for purposes of this regulation until either (1) one of the ''top 5'' individuals vacates his or her position, or (2) the next ''top 5'' are identified the following year.

In the case that one of the ''top 5'' vacates his or her position, this regulation is intended to apply in the following manner. If the position of president or chief financial officer is vacated, the new president or chief financial officer will become one of the ''top 5'' immediately when the change is

[10] 78 FR 28442, 28444–45 (May 14, 2013).

[11] 78 FR at 28445.

[12] Generally, the ''top 5'' are determined as of a certain date based on current position (for the president or chief financial officer) or the previous 12 months of compensation (for the most highly compensated employees).

effective.[13] If a current employee is promoted with an increase in compensation to fill the role vacated by one of the ''top 5'' or a new hire is intended to fill the role vacated by one of the ''top 5''—and it is reasonably foreseeable that if the individual remains in the role that such individual will become a ''top 5'' employee under the SEC rules—then the individual should be treated as an executive officer for purposes of this final rule upon the promotion or hire becoming effective.

Compensation Actions Requiring Advance Notice

The interim final rule requires prior notification before payment to an executive officer of annual compensation, pay for performance or incentive pay, ''or any other element of compensation.'' The Banks requested clarification of what ''any other element of compensation'' is intended to include, and particularly, whether it includes reimbursements for travel expenses, employee benefit plans such as health benefit plans, and other general plans that executive officers participate in along with other Bank employees.

Compensation is defined broadly to include any item of current or potential value provided in connection with employment, including benefits received under a broad-based benefit plan. This is because FHFA reviews the value of benefits provided under such plans, programs, and arrangements on an ongoing basis in exercising its review authority. FHFA must be aware of the value of benefits provided under such plans, programs, and arrangements in addition to all other payments of money or any other thing of current or potential value to determine whether an officer's overall ''compensation'' is reasonable and comparable. With regard to the notice requirement, however, approval of a broad-based benefit plan or policy (such as a travel reimbursement policy) can serve to satisfy the notice requirement for individual payments made under those plans. For purposes of clarity, such blanket approval can apply to the periodic payments of base salary, but is not intended to apply to any payments under incentive plans, any pay for performance, any plans that apply principally to the executive officers as defined in this final rule, or to any payments under individually negotiated agreements.

Moreover, FHFA is responding to the Banks' comment by replacing the phrase ''any other element of compensation'' with a more specific list of the elements of compensation to which the notice requirement applies. The revised regulatory text in § 1230.3(d)(3) provides that ''[a] regulated entity or the Office of Finance shall not, without providing the Director at least 30 days' advance written notice, pay, disburse, or transfer to any executive officer, annual compensation (where the annual amount has changed); pay for performance or other incentive pay; any amounts under a severance plan, change-in-control agreement, or other separation agreement; any compensation that would qualify as direct compensation for purposes of securities filings; or any other element of compensation identified by the Director prior to the notice period.'' Payments made under broad-based health benefit plans, for example, are not subject to the notice requirement. This change serves to narrow the scope of the notice requirement as compared to the interim final rule and is therefore within the scope of the interim final rule's request for comment.[14]

Comments Regarding Additional Process

The Banks requested that the rule be amended to include additional procedures. For example, the Banks requested that the rule include procedures for notifying the Bank of any compensation review, provision to the Banks of official explanation of any action FHFA is considering, and procedures for FHFA to receive input from the Banks on such actions. The Banks also reiterated comments they had made on the proposed rule, to which FHFA responded in the **SUPPLEMENTARY INFORMATION** to the interim final rule.

FHFA believes the input of the Banks is important in its decision-making, and also appreciates that any directive it would issue to a regulated entity to prohibit or withhold compensation of an executive officer impacts the executive financially. For that reason, any such decision is made only after thorough review and full understanding of the facts on a case-by-case basis, and the application to the facts of its authorities mandated by Congress. Such thorough review and full understanding of relevant facts occurs with a regulated entity's full cooperation and input. FHFA believes incorporating additional procedures in this final rule is unnecessary in light of the extent of communication that will occur with a regulated entity before making a decision such as a determination that executive compensation is excessive or that there had been employee misconduct, and would unduly delay corrective action.

Grandfathering

The Banks requested grandfathering for compensation agreements in place as of the effective date of the final rule (as opposed to the date of the interim final rule, which was May 14, 2013.) The proposed rule, which was issued prior to the interim final rule and provided opportunity for notice and comment on FHFA's executive compensation rulemaking, was issued June 5, 2009. FHFA believes the period of time from the publication of the proposed rule to the interim final rule, in addition to opportunity for notice and comment, has provided satisfactory notice to the regulated entities of the provisions of the executive compensation rulemaking.

Recapture of excessive compensation

As described in the **SUPPLEMENTARY INFORMATION** to the interim final rule, FHFA plans to publish for comment a proposal to require the regulated entities to develop and adopt policies to provide for recapture of improvidently or improperly paid compensation in appropriate circumstances.[15]

Regulatory Impact

Paperwork Reduction Act

The final rule does not contain any information collection requirement that requires the approval of OMB under the Paperwork Reduction Act (44 U.S.C. 3501 *et seq.*).

Regulatory Flexibility Act

The Regulatory Flexibility Act (5 U.S.C. 601 *et seq.*) requires that a rule that has a significant economic impact on a substantial number of small entities, small businesses, or small organizations must include an initial regulatory flexibility analysis describing the rule's impact on small entities. Such an analysis need not be undertaken if

[13] Employees who act in the capacity of the vacated position, or who take on similar responsibilities until a successor is named, with no corresponding change in compensation, are not intended to be considered the ''top 5'' based solely on the temporary performance of those responsibilities.

[14] This is the only change to the text of the interim final rule that FHFA has made, other than to add ''supervisory'' to paragraph (1)(iii) of the definition of ''reasonable and comparable'' to clarify what kind of guidance is referred to, consistent with the discussion at 78 FR 28445.

[15] *See* 78 FR at 28446. Such policies would speak more broadly than those contemplated by section 954 of the Dodd-Frank Act, which would address only the recovery of incentive compensation that had been paid based on financial results that are later required to be restated. *See* Securities Exchange Act of 1934 section 10D, 15 U.S.C. 78j–4.

the agency has certified that the rule will not have a significant economic impact on a substantial number of small entities. 5 U.S.C. 605(b). FHFA has considered the impact of the interim final rule under the Regulatory Flexibility Act. FHFA certifies that the interim final rule is not likely to have a significant economic impact on a substantial number of small business entities because the rule is applicable only to the regulated entities, which are not small entities for purposes of the Regulatory Flexibility Act.

List of Subjects

12 CFR Part 1230

Administrative practice and procedure, Compensation, Confidential business information, Government-sponsored enterprises, Reporting and recordkeeping requirements.

12 CFR Part 1770

Administrative practice and procedure, Confidential business information, Reporting and recordkeeping requirements.

Authority and Issuance

Accordingly, for the reasons stated in the **SUPPLEMENTARY INFORMATION**, the Interim Final Rule published at 78 FR 28442 (May 14, 2013) is adopted as a final rule with the following changes:

CHAPTER XII—FEDERAL HOUSING FINANCE AGENCY

SUBCHAPTER B—ENTITY REGULATIONS

■ 1. Revise part 1230 to read as follows:

PART 1230—EXECUTIVE COMPENSATION

Sec.
1230.1 Purpose.
1230.2 Definitions.
1230.3 Prohibition and withholding of executive compensation.
1230.4 Prior approval of termination agreements of Enterprises.
1230.5 Submission of supporting information.

Authority: 12 U.S.C. 1427, 1431(l)(5), 1452(h), 4502(6), 4502(12), 4513, 4514, 4517, 4518, 4518a, 4526, 4631, 4632, 4636, and 1723a(d).

§ 1230.1 Purpose.

The purpose of this part is to implement requirements relating to the supervisory authority of FHFA under the Safety and Soundness Act with respect to compensation provided by the regulated entities and the Office of Finance to their executive officers. This part also establishes a structured process for submission of relevant information by the regulated entities and the Office of Finance, in order to facilitate and enhance the efficiency of FHFA's oversight of executive compensation.

§ 1230.2 Definitions.

The following definitions apply to the terms used in this part:

Charter acts mean the Federal National Mortgage Association Charter Act and the Federal Home Loan Mortgage Corporation Act, which are codified at 12 U.S.C. 1716 through 1723i and 12 U.S.C. 1451 through 1459, respectively.

Compensation means any payment of money or the provision of any other thing of current or potential value in connection with employment. Compensation includes all direct and indirect payments of benefits, both cash and non-cash, granted to or for the benefit of any executive officer, including, but not limited to, payments and benefits derived from an employment contract, compensation or benefit agreement, fee arrangement, perquisite, stock option plan, post-employment benefit, or other compensatory arrangement.

Enterprise means the Federal National Mortgage Association and the Federal Home Loan Mortgage Corporation (collectively, Enterprises) and, except as provided by the Director, any affiliate thereof.

Executive officer means:

(1) With respect to an Enterprise:

(i) The chairman of the board of directors, chief executive officer, chief financial officer, chief operating officer, president, vice chairman, any executive vice president, any senior vice president, any individual in charge of a principal business unit, division, or function, and any individual who performs functions similar to such positions whether or not the individual has an official title; and

(ii) Any other officer as identified by the Director;

(2) With respect to a Bank:

(i) The president, the chief financial officer, and the three other most highly compensated officers; and

(ii) Any other officer as identified by the Director.

(3) With respect to the Office of Finance:

(i) The chief executive officer, chief financial officer, and chief operating officer; and

(ii) Any other officer identified by the Director.

Reasonable and comparable means compensation that is:

(1) *Reasonable*—compensation, taken in whole or in part, that would be appropriate for the position and based on a review of relevant factors including, but not limited to:

(i) The duties and responsibilities of the position;

(ii) Compensation factors that indicate added or diminished risks, constraints, or aids in carrying out the responsibilities of the position; and

(iii) Performance of the regulated entity, the specific employee, or one of the entity's significant components with respect to achievement of goals, consistency with supervisory guidance and internal rules of the entity, and compliance with applicable law and regulation.

(2) *Comparable*—compensation that, taken in whole or in part, does not materially exceed compensation paid at institutions of similar size and function for similar duties and responsibilities.

Regulated entity means any Enterprise and any Federal Home Loan Bank.

§ 1230.3 Prohibition and withholding of executive compensation.

(a) *In general.* The Director may review the compensation arrangements for any executive officer of a regulated entity or the Office of Finance at any time, and shall prohibit the regulated entity or the Office of Finance from providing compensation to any such executive officer that the Director determines is not reasonable and comparable with compensation for employment in other similar businesses involving similar duties and responsibilities. No regulated entity or the Office of Finance shall pay compensation to an executive officer that is not reasonable and comparable with compensation paid by such similar businesses involving similar duties and responsibilities. No Enterprise in conservatorship shall pay a bonus to any senior executive during the period of that conservatorship.

(b) *Factors to be taken into account.* In determining whether compensation provided by a regulated entity or the Office of Finance to an executive officer is not reasonable and comparable, the Director may take into consideration any factors the Director considers relevant, including any wrongdoing on the part of the executive officer, such as any fraudulent act or omission, breach of trust or fiduciary duty, violation of law, rule, regulation, order, or written agreement, and insider abuse with respect to the regulated entity or the Office of Finance.

(c) *Prohibition on setting compensation by Director.* In carrying out paragraph (a) of this section, the Director may not prescribe or set a specific level or range of compensation.

(d) *Advance notice to Director of certain compensation actions.* (1) A regulated entity or the Office of Finance

shall not, without providing the Director at least 60 days' advance written notice, enter into any written arrangement that provides incentive awards to any executive officer or officers.

(2) A regulated entity or the Office of Finance shall not, without providing the Director at least 30 days' advance written notice, enter into any written arrangement that:

(i) Provides an executive officer a term of employment for a term of six months or more; or

(ii) In the case of a Bank or the Office of Finance, provides compensation to any executive officer in connection with the termination of employment, or establishes a policy of compensation in connection with the termination of employment.

(3) A regulated entity or the Office of Finance shall not, without providing the Director at least 30 days' advance written notice, pay, disburse, or transfer to any executive officer, annual compensation (where the annual amount has changed); pay for performance or other incentive pay; any amounts under a severance plan, change-in-control agreement, or other separation agreement; any compensation that would qualify as direct compensation for purposes of securities filings; or any other element of compensation identified by the Director prior to the notice period.

(4) Notwithstanding the foregoing review periods, a regulated entity or the Office of Finance shall provide five business days' advance written notice to the Director before committing to pay compensation of any amount or type to an executive officer who is being newly hired.

(5) The Director reserves the right to extend any of the foregoing review periods, and may do so in the Director's discretion, upon notice to the regulated entity or the Office of Finance. Any such notice shall set forth the number of business or calendar days by which the review period is being extended.

(e) *Withholding, escrow, prohibition.* During the review period required by paragraph (d) of this section, or any extension thereof, a regulated entity or the Office of Finance shall not execute the compensation action that is under review unless the Director provides written notice of approval or non-objection. During a review under paragraph (a) or (d) of this section, or at any time before an executive compensation action has been taken, the Director may, by written notice, require a regulated entity or the Office of Finance to withhold any payment, transfer, or disbursement of compensation to an executive officer, or to place such compensation in an escrow account, or may prohibit the action.

§ 1230.4 Prior approval of termination agreements of Enterprises.

(a) *In general.* An Enterprise may not enter into any agreement or contract to provide any payment of money or other thing of current or potential value in connection with the termination of employment of an executive officer unless the agreement or contract is approved in advance by the Director.

(b) *Covered agreements or contracts.* An agreement or contract that provides for termination payments to an executive officer of an Enterprise that was entered into before October 28, 1992,[1] is not retroactively subject to approval or disapproval by the Director. However, any renegotiation, amendment, or change to such an agreement or contract shall be considered as entering into an agreement or contract that is subject to approval by the Director.

(c) *Factors to be taken into account.* In making the determination whether to approve or disapprove termination benefits, the Director may consider:

(1) Whether the benefits provided under the agreement or contract are comparable to benefits provided under such agreements or contracts for officers of other public or private entities involved in financial services and housing interests who have comparable duties and responsibilities;

(2) The factors set forth in § 1230.3(b); and

(3) Such other information as deemed appropriate by the Director.

(d) *Exception to prior approval.* An employment agreement or contract subject to prior approval of the Director under this section may be entered into prior to that approval, provided that such agreement or contract specifically provides notice that termination benefits under the agreement or contract shall not be effective and no payments shall be made under such agreement or contract unless and until approved by the Director. Such notice should make clear that alteration of benefit plans subsequent to FHFA approval under this section, which affect final termination benefits of an executive officer, requires review at the time of the individual's termination from the Enterprise and prior to the payment of any benefits.

(e) *Effect of prior approval of an agreement or contract.* The Director's approval of an executive officer's termination of employment benefits shall not preclude the Director from making any subsequent determination under this section to prohibit and withhold executive compensation.

(f) *Form of approval.* The Director's approval pursuant to this section may occur in such form and manner as the Director shall provide through written notice to the regulated entities or the Office of Finance.

§ 1230.5 Submission of supporting information.

In support of the reviews and decisions provided for in this part, the Director may issue guidance, orders, or notices on the subject of information submissions by the regulated entities and the Office of Finance.

Dated: January 15, 2014.

Melvin L. Watt,

Director, Federal Housing Finance Agency.

[FR Doc. 2014–01362 Filed 1–27–14; 8:45 am]

BILLING CODE 8070–01–P

[1] This date refers to the date of enactment of the Federal Housing Enterprises Financial Safety and Soundness Act of 1992.

FEDERAL HOUSING FINANCE AGENCY

12 CFR Part 1231

RIN 2590–AA08

Golden Parachute Payments

AGENCY: Federal Housing Finance Agency.

ACTION: Final rule.

SUMMARY: The Federal Housing Finance Agency (FHFA) is issuing a final regulation amending the Golden Parachute Payments regulation that was published in the **Federal Register** on January 29, 2009. This final rule amendment (final rule) addresses prohibited and permissible golden parachute payments to entity-affiliated parties in connection with the Federal National Mortgage Association, the Federal Home Loan Mortgage Corporation, and the Federal Home Loan Banks (regulated entities) as well as the Office of Finance. Additionally, this final rule responds to public comments received by FHFA on the golden parachute payment provisions.

DATES: *Effective Date:* February 27, 2014.

FOR FURTHER INFORMATION CONTACT: Alfred M. Pollard, General Counsel, (202) 649–3050, *Alfred.Pollard@fhfa.gov,* or Lindsay Simmons, Assistant General Counsel, (202) 649–3066, *Lindsay.Simmons@fhfa.gov* (not toll-free numbers). The telephone number for the

Telecommunications Device for the Hearing Impaired is (800) 877–8339.

SUPPLEMENTARY INFORMATION:

I. Background

A. General Background

Section 1114 of the Housing and Economic Recovery Act of 2008 (HERA) amended section 1318(e) of the Federal Housing Enterprises Financial Safety and Soundness Act of 1992 (Safety and Soundness Act) (12 U.S.C. 4518(e)) to provide explicit authorities to FHFA in addressing golden parachute payments and indemnification payments.[1]

B. Background on Golden Parachute Payments

In the **SUPPLEMENTARY INFORMATION** to the final regulation on Golden Parachute Payments published on January 29, 2009 (the 2009 final rule), FHFA stated that in response to comments it would consider subsequent rulemaking to align provisions of the Golden Parachute Payments regulation with standards set forth in the Federal Deposit Insurance Corporation (FDIC) regulation on golden parachute payments (FDIC rule). To this end, FHFA issued a proposed rule on June 29, 2009 (Proposal) to amend the 2009 final regulation and solicit comments. The Proposal included provisions that were substantially similar to those of the FDIC rule.

FHFA issued the Re-proposal on May 14, 2013, in order to narrow its approach to grandfathering, address comments regarding retirement plans, clarify its intent through both the **SUPPLEMENTARY INFORMATION** and regulatory text, and provide additional opportunity for the public to comment on any provision of the rule. The comment period for the Re-proposal closed on July 15, 2013. This final rule responds to comments and implements the Re-proposal, amending the 2009 final rule to align more closely with the FDIC rule.

FHFA recently adopted a rule setting forth definitions of terms commonly used in its regulations, and has removed a duplicative definition in this final rule.[2]

II. Comments on the Proposed Amendment

FHFA received comments on the golden parachute provisions of the Re-proposal from the 12 Federal Home Loan Banks (Banks), the Office of Finance (OF), and the public during the comment period for the Re-proposal, which closed on July 15, 2013. Comments received in response to the Re-proposal addressed grandfathering of plans, the double approval process, the golden parachute payment definition's exception for severance plans, mitigating factors in the FHFA Director's review, and requests for clarification, among other topics.

In response to the comments, FHFA notes generally that this final rule implements amendments to the 2009 final rule which were proposed in response to prior requests from nine of the Federal Home Loan Banks and Fannie Mae to follow the FDIC rule's precedent. The nine Federal Home Loan Banks requested that FHFA consider changes to conform FHFA's regulation of golden parachute payments to that of the FDIC rule, as the legislative provisions on which they are based are similar to those of HERA and represent industry practice. Fannie Mae also commented that the FDIC rule implements legislation similar to HERA, so conformance with regulations would foster uniformity in regulation, public perception of fairness, and competition on a level regulatory playing field for executive talent. Fannie Mae stated that such conformance would reduce administrative burden because of existing guidance and precedent. Much of the substance of this final rule, and the comments relating to it, originate from FHFA's response to those requests to more closely align its golden parachute regulation with the FDIC rule.

A. Summary of Final Rule's Application

To provide further clarity, FHFA is addressing in this Supplementary Information the intended meaning of the regulation text. Specifically, the regulated entities and OF may find the below format useful when determining whether approval of the Director is required to enter into an agreement to make a golden parachute payment, or make a payment under such an agreement. Below is a summary of when approval of the Director is required.

A regulated entity or OF need not obtain approval of the Director to enter into a termination agreement with, or to pay under such agreement, an entity-affiliated party under the following circumstances:

- A regulated entity or OF is not subject to any of the triggering events listed in paragraph 1(ii) of the definition of ''golden parachute payment'' (''triggering events'');
- A regulated entity or OF is no longer subject to a triggering event (*e.g.,* it has emerged from a troubled condition); or
- An entity-affiliated party begins to receive payments under an agreement prior to the occurrence of a triggering event that continue after the triggering event, if the entity-affiliated party's employment was not terminated in contemplation of the triggering event.

A regulated entity or OF, when subject to a triggering event, must obtain the approval of the Director if it:

- Enters into an agreement with an entity-affiliated party providing a golden parachute payment;
- Amends an employment contract containing golden parachute provisions with an entity-affiliated party;
- Renews an employment agreement (including automatic renewal) with an entity-affiliated party that contains severance provisions;
- Makes a payment related to a change in control (not resulting from conservatorship or receivership); or
- Otherwise makes a payment to an entity-affiliated party under a golden parachute agreement.

B. Grandfathering

In the Re-proposal, FHFA stated its intention to grandfather a subset of the golden parachute agreements that may currently be in place. Specifically, FHFA grandfathered all retirement plans and deferred compensation plans in place as of the Re-proposal's publication on May 14, 2013. FHFA clarified at that time that it would not grandfather severance plans, change-in-control agreements, and arrangements to make ad hoc payments, as had originally been contemplated in the Supplementary Information to the Proposal.

[1] FHFA published an interim final regulation on Golden Parachute and Indemnification Payments in the **Federal Register** on September 16, 2008 (73 FR 53356). Subsequently, it published corrections rescinding that portion of the regulation that addressed indemnification payments on September 19, 2008 (73 FR 54309) and on September 23, 2008 (73 FR 54673). On November 14, 2008 (73 FR 67424), FHFA published in the **Federal Register** a proposed amendment to the interim final regulation that addressed indemnification payments. The public notice and comment period closed on December 29, 2008. On January 29, 2009 (74 FR 5101), FHFA published the final regulation on Golden Parachute Payments (the 2009 final rule). On June 29, 2009 (74 FR 30975), FHFA published a proposed amendment to the 2009 final rule that addressed prohibited and permissible golden parachute payments in further detail (Proposal). The Proposal noted that comments received in response to the November 14, 2008, publication on indemnification payments would be considered along with comments received in response to the Proposal. On May 14, 2013, FHFA re-issued the Proposal (78 FR 28452) (Re-proposal) and addressed only golden parachute payments, stating in the Supplementary Information that comments received on indemnification payments would be addressed in a final rule on Golden Parachute and Indemnification Payments. This final rule amends only the golden parachute payment provisions. A final rule on indemnification payment provisions remains under review.

[2] The definition of ''Safety and Soundness Act'' was removed. *See* 12 CFR 1201.1.

The Banks commented that FHFA did not provide a reason for reducing the scope of the grandfathering, and requested that all plans that could result in a golden parachute payment (including severance, change in control, and ad hoc payments) be grandfathered as of the Re-proposal, not just retirement and deferred compensation plans.

FHFA has considered the Banks' comments, but is not changing its approach to grandfathering. FHFA returns to the language of the authorizing statute, the Safety and Soundness Act as amended by HERA, which gives FHFA the authority to prohibit or limit any golden parachute payment and has no provision for grandfathering. FHFA has determined that it is appropriate to grandfather certain plans that it has reviewed, after concluding that they do not pose a risk of the kind of corporate waste and abuse that the statute was intended to prevent. These are the retirement and deferred compensation plans. FHFA has considered the remaining types of golden parachute agreements—severance agreements, change in control agreements, and arrangements to make ad hoc payments—and is unable to make the same determination with respect to them or to satisfy itself that it is aware of all of them. Therefore, those agreements must remain subject to review by FHFA in order for FHFA to carry out its authority under HERA.

For further clarification, FHFA confirms that it has grandfathered all retirement plans and deferred compensation plans in place as of the date of the Re-proposal, with other plans subject to review by FHFA, as appropriate. The grandfathered plans include defined-contribution, defined-benefit, and deferred compensation plans in place as of the publication of the Re-proposal on May 14, 2013, without regard to whether they meet the requirements to be treated as a bona fide deferred compensation plan or arrangement under § 1231.1.

With respect to severance plans, FHFA will allow the entities three months from the effective date of the final rule within which they may submit for FHFA review and approval existing severance plans that were adopted, or modified to increase the amount or scope of severance benefits, at a time when the entity was subject to a triggering event specified in paragraph (1)(ii) of the definition of the term ''golden parachute payment'' but which otherwise fall under the severance exception from the definition of ''golden parachute payment.'' Pursuant to paragraph (2)(v)(A) of the ''golden parachute payment'' definition, such plans may qualify for the exception only if they receive approval from FHFA.

Below is a summary of how the definition of ''golden parachute payment'' applies to different plans:

Qualified pension or retirement plans and *benefit plans* are excepted from the requirements of the regulation and, therefore, any changes to them do not require FHFA approval.

Nonqualified retirement plans (either defined-contribution or defined-benefit plans or deferred compensation plans) established for the benefit of executives whose participation in a regulated entity's qualified plans is curtailed by the Internal Revenue Service limits are ''bona fide deferred compensation plans'' if they meet the requirements of that definition. Such nonqualified plans meeting those requirements are therefore excepted from the definition of ''golden parachute payment.''

All retirement plans established for the benefit of executives in place as of the Re-proposal's publication date of May 14, 2013, are grandfathered. From that date forward, any retirement plans that are not qualified, and that are not bona fide deferred compensation plans, and payouts on such plans, will qualify as golden parachute payments and will require FHFA review and approval, if the regulated entity is subject to a triggering event.

Severance plans are excepted if they meet the various terms of the regulation (such as those that authorize payment of not more than 12 months of compensation, as discussed further below). As stated above, FHFA will allow the entities three months from the effective date of the final rule within which they may submit for FHFA review and approval existing severance plans that were adopted, or modified to increase the amount or scope of severance benefits, at a time when the entity was subject to a triggering event specified in paragraph (1)(ii) of the definition of the term ''golden parachute payment'' but which otherwise fall under the severance exception from the definition of ''golden parachute payment.'' Pursuant to paragraph (2)(v)(A) of the ''golden parachute payment'' definition, such plans may qualify for the exception only if they receive approval from FHFA.

Severance plans outside of the exception to the term ''golden parachute payment'' (such as severance plans that fail to satisfy the definition of ''nondiscriminatory'') are subject to FHFA review and approval if the entity is subject to a triggering event.

Change-of-control agreements and ad hoc payments are not grandfathered or excepted and, therefore, require FHFA review and approval if the regulated entity is subject to a triggering event.

C. Double Approval

The Banks expressed concerns with the ''double approval'' process for golden parachute payments. According to the final rule, in any circumstance in which an agreement that provides for a golden parachute payment has been approved by the Director, an additional approval by the Director is required in order to make such a payment under the agreement if the entity is subject to a triggering event. This requirement appeared in the Proposal and in the Re-proposal, follows the structure in the statute implemented by this regulation (the Safety and Soundness Act as amended by HERA), and mirrors the practice of the FDIC for institutions subject to its golden parachute payments regulation.

The Banks state that the double approval process may create an adverse impact on a Bank's ability to attract and retain qualified executives if an executive's right to payment in the event of a future separation from employment is subject to the approval of the Director. The Banks expressed concern particularly in the case of change-in-control payments and when hiring new employees if an entity is currently subject to, or seeking to avoid, a triggering event.

The double approval process is supported by the following considerations: First, an agreement containing provisions that the regulator considers unreasonable for an entity subject to a triggering event should be disapproved without waiting for payments to be made under it, so that the regulated entity can develop an alternative acceptable arrangement and so that executives will not be relying on an agreement under which they will not, in the event, be able to receive payments. Further, subsequent to the approval of a golden parachute agreement, the regulated entity or OF may deteriorate further, and a golden parachute payment may negatively affect its safety and soundness, or the executive may be found to have contributed to the deterioration. To address that concern, FHFA believes that a review of both the golden parachute agreement, and the circumstances of the regulated entity or OF during the period in which the payment is actually being made, is necessary.

For these reasons, FHFA has declined to remove the double approval process, in order to uphold its responsibility to ensure the safety and soundness of the regulated entities. FHFA recognizes the

challenges that may be raised by its authority to withhold golden parachute payments under certain circumstances, but believes that Congress clearly intended for golden parachute payments, in addition to agreements, to be subject to review when a regulated entity or OF is insolvent, in conservatorship or receivership, or otherwise in troubled condition, and that this is the prudentially sound result. This is the same regime that the FDIC administers under its statute and regulation.

D. Director's Review and Mitigating Factors

FHFA emphasizes that a regulated entity or OF always may apply for approval from the Director if a golden parachute payment is not otherwise permissible. The Director's review will take into account factors set forth in § 1231.6, including the cost of the payment and the effect that the payment will have on the capital and earnings of the regulated entity. The Director may consider the degree to which the proposed payment represents a reasonable payment for services rendered over the period of employment, and other case-specific facts and circumstances surrounding the golden parachute payment as set forth in § 1231.3(b)(2)(i) through (iii). For example, the Director may consider mitigating factors such as the individual's history of beneficial contribution to the regulated entity, and cooperation with FHFA's relevant remediation efforts. The presence of any of the negative factors enumerated in proposed § 1231.3(b)(2) is not an absolute bar to the approval of a golden parachute payment. Absent mitigating factors, there would be a presumption, if any of those factors were present, that the golden parachute application should be denied. That presumption can be overcome, however, and the Director has discretion to approve payment in such circumstances.

E. Definition of Compensation

The Banks requested that FHFA provide an express definition of ''compensation'' in the final rule. The definition of ''golden parachute payment'' in § 12131.2 is ''[a]ny payment (or any agreement to make any payment) *in the nature of compensation* by any regulated entity or the Office of Finance for the benefit of any current or former entity-affiliated party pursuant to an obligation of such regulated entity or the Office of Finance. . . .'' [Emphasis added.]

The Safety and Soundness Act provision on golden parachute payments, the Federal Deposit Insurance Act provision on which it is based, and the FDIC rule on which this regulation is based all define a golden parachute payment as being ''in the nature of compensation,'' but none defines the term ''compensation.'' The FDIC included the qualifying phrase ''in the nature of compensation'' in its final regulation to make clear that the FDIC did not intend to restrict institutions, even those that are troubled, from paying terminating employees accrued but unused benefits, such as vacation. The FDIC also noted that the qualifying phrase is used to show that a certain payment should be treated as a golden parachute payment because the regulators have historically treated it as compensation, *e.g.,* payments under ''split dollar'' insurance agreements.

Against the statutory background, and the treatment of the concept by the FDIC in its regulation, FHFA understands ''compensation'' to be payment for employment or services rendered by individuals. So understood, the concept does not include the various types of payments that commenters previously expressed concern about: payments of advance proceeds, dividends, deposit account withdrawals, and AHP funds; nor does it include debt service payments from Banks to OF, or payout of accrued but unused benefits, such as vacation.

F. Inclusion of Directors

For purposes of clarity, FHFA reiterates that members of the regulated entities' boards of directors fall within the definition of ''entity-affiliated party'' as stated in the statute and the rule, though directors may not have an employee relationship to the regulated entity. Directors are responsible for the governance and oversight of management of the regulated entity, and FHFA believes there is no reason to exclude them from the rule.

G. GAAP

The Banks submitted a comment on the definition of ''bona fide deferred compensation plan or arrangement,'' regarding GAAP accounting treatment. FHFA notes that the reference to GAAP is identical to that of the FDIC rule, and is intended to require that compensation expense is recognized and a liability accrued on a reasonable schedule and in all other ways in accordance with GAAP. No further clarification is needed to specify the timing of GAAP treatment.

H. Exception for Severance

The definition of ''golden parachute payment'' includes an exception for payments pursuant to a nondiscriminatory severance pay plan or arrangement. The Banks requested that FHFA alter the definition of ''nondiscriminatory,'' and also remove the $300,000 salary cap, which was a new addition in the Re-proposal.

The Banks requested that FHFA expressly clarify that the objective criteria that may be used in a nondiscriminatory severance pay plan can include service at other Banks. The definition of ''nondiscriminatory'' is modeled on the FDIC rule's definition, and both require that under a nondiscriminatory plan, provision of different benefits can be based only on objective criteria. FHFA included the following examples of objective criteria: salary, total compensation, length of service, and job grade or classification. Other objective criteria may be used. It is not necessary for FHFA to list additional objective criteria that may be included, particularly a criterion that is specific to only some of the regulated entities.

Regarding the $300,000 salary cap, while the Banks objected to the use of any salary cap, FHFA continues to believe that payment of a full year's severance may be inappropriate to certain top executives with high salaries, when their institution is in a troubled condition. However, FHFA has modified the salary cap so that it applies only to employees who are both a) executive officers, as that term is defined in FHFA's rule on executive compensation, and b) have base salaries exceeding $300,000. This modification more narrowly tailors the regulation to allow an exception for severance, limiting its availability to certain executives for whom it may not be appropriate. As always, the Director continues to have discretion under § 1231.3(b)(1)(i) to approve golden parachute payments that are not otherwise permissible.

This $300,000 salary cap for executive officers is now effective in this final rule. FHFA has determined that additional notice and comment is not required for this modification because its effect is to reduce the number of individuals to whom the salary cap applies to a subset of those to whom it applied under the Re-proposal. The public, the regulated entities, and OF have had an opportunity to provide comment regarding the salary cap when it applied to a larger group that included all of those to whom it currently applies.[3]

[3] This is the only significant change that FHFA made from the rule as proposed.

Continued

Regulatory Impacts

Paperwork Reduction Act

The Final Rule does not contain any information collection requirement that requires the approval of OMB under the Paperwork Reduction Act (44 U.S.C. 3501 *et seq.*).

Regulatory Flexibility Act

The Regulatory Flexibility Act (5 U.S.C. 601 *et seq.*) requires that a regulation that has a significant economic impact on a substantial number of small entities, small businesses, or small organizations must include an initial regulatory flexibility analysis describing the regulation's impact on small entities. Such an analysis need not be undertaken if the agency has certified that the regulation will not have a significant economic impact on a substantial number of small entities. 5 U.S.C. 605(b). FHFA has considered the impact of the Final Rule under the Regulatory Flexibility Act. FHFA certifies that the Final Rule is not likely to have a significant economic impact on a substantial number of small business entities because the regulation is applicable only to the regulated entities which are not small entities for the purposes of the Regulatory Flexibility Act.

List of Subjects in 12 CFR Part 1231

Golden parachutes, Government-sponsored enterprises, Indemnification.

Authority and Issuance

Accordingly, for reasons stated in the Supplementary Information, under the authority of 12 U.S.C. 4518(e) and 4526, FHFA amends part 1231 of subchapter B of title 12 CFR Chapter XII as follows:

SUBCHAPTER B—ENTITY REGULATIONS

PART 1231—GOLDEN PARACHUTE AND INDEMNIFICATION PAYMENTS

■ 1. The authority citation for part 1231 is revised to read as follows:

Authority: 12 U.S.C. 4518(e), 4518a, 4526.

■ 2. The heading of part 1231 is revised to read as set forth above.

■ 3. Section 1231.1 is revised to read as follows:

§ 1231.1 Purpose.

The purpose of this part is to implement section 1318(e) of the Safety and Soundness Act (12 U.S.C. 4518(e)) by setting forth the standards that the Director will take into consideration in determining whether to limit or prohibit golden parachute payments and by setting forth prohibited and permissible indemnification payments that regulated entities and the Office of Finance may make to entity-affiliated parties.

■ 4. Section 1231.2 is revised to read as follows:

§ 1231.2 Definitions.

The following definitions apply to the terms used in this part:

Benefit plan means any plan, contract, agreement, or other arrangement which is an ''employee welfare benefit plan'' as that term is defined in section 3(1) of the Employee Retirement Income Security Act of 1974, as amended (29 U.S.C. 1002(1)), or other usual and customary plans such as dependent care, tuition reimbursement, group legal services, or cafeteria plans; provided however, that such term shall not include any plan intended to be subject to paragraphs (2)(iii) and (v) of the term *golden parachute payment* as defined in this section.

Bona fide deferred compensation plan or arrangement means any plan, contract, agreement, or other arrangement whereby:

(1) An entity-affiliated party voluntarily elects to defer all or a portion of the reasonable compensation, wages, or fees paid for services rendered which otherwise would have been paid to such party at the time the services were rendered (including a plan that provides for the crediting of a reasonable investment return on such elective deferrals) and the regulated entity or the Office of Finance either:

(i) Recognizes compensation expense and accrues a liability for the benefit payments according to generally accepted accounting principles (GAAP); or

(ii) Segregates or otherwise sets aside assets in a trust which may only be used to pay plan and other benefits and related expenses, except that the assets of such trust may be available to satisfy claims of creditors of the regulated entities or the Office of Finance in the case of insolvency; or

(2) A regulated entity or the Office of Finance establishes a nonqualified deferred compensation or supplemental retirement plan, other than an elective deferral plan described in paragraph (1) of this definition:

(i) Primarily for the purpose of providing benefits for certain entity-affiliated parties in excess of the limitations on contributions and benefits imposed by sections 401(a)(17), 402(g), 415, or any other applicable provision of the Internal Revenue Code of 1986 (26 U.S.C. 401(a)(17), 402(g), 415); or

(ii) Primarily for the purpose of providing supplemental retirement benefits or other deferred compensation for a select group of directors, management, or highly compensated employees (excluding severance payments described in paragraph (2)(v) of the term *golden parachute payment* as defined in this section and permissible golden parachute payments described in § 1231.3(b)); and

(3) In the case of any nonqualified deferred compensation or supplemental retirement plans as described in paragraphs (1) and (2) of this definition, the following requirements shall apply:

(i) The plan was in effect at least one year prior to any of the events described in paragraph (1)(ii) of the term *golden parachute payment* as defined in this section;

(ii) Any payment made pursuant to such plan is made in accordance with the terms of the plan as in effect no later than one year prior to any of the events described in paragraph (1)(ii) of the term *golden parachute payment* as defined in this section and in accordance with any amendments to such plan during such one-year period that do not increase the benefits payable thereunder, provided that changes required by law should be disregarded in determining whether a plan provision has been in effect for one year;

(iii) The entity-affiliated party has a vested right, as defined under the applicable plan document, at the time of termination of employment to payments under such plan;

(iv) Benefits under such plan are accrued each period only for current or prior service rendered to the employer (except that an allowance may be made for service with a predecessor employer);

FHFA also transferred the regulation's reference to regulated entities with low examination ratings from the list of triggering events in the definition of ''golden parachute payment'' to the definition of ''troubled condition.'' Since a troubled condition is itself a triggering event to coverage under the rule, this transfer makes no difference to whether an institution is subject to the restrictions of the rule, and it is more intuitive to consider the low examination rating as part of the definition of ''troubled condition'' than outside of it. The resulting structure is consistent with that of the FDIC's rule, which includes a low examination rating in its definition of ''troubled condition.'' 12 CFR 303.101(c). The transfer also makes explicit that a regulated entity must take the low examination rating into account under § 1231.3(b)(1)(iv)(B) when making its request for permission to make a golden parachute payment. The involvement of an entity-affiliated party in a regulated entity's poor condition, including as reflected in its examination rating, is a factor that the Director may in any event consider when deciding on such a request under § 1231.3(b)(2) as proposed and now final.

(v) Any payment made pursuant to such plan is not based on any discretionary acceleration of vesting or accrual of benefits which occurs at any time later than one year prior to any of the events described in paragraph (1)(ii) of the term *golden parachute payment* as defined in this section;

(vi) The regulated entity or the Office of Finance has previously recognized compensation expense and accrued a liability for the benefit payments according to GAAP, or segregated or otherwise set aside assets in a trust which may only be used to pay plan benefits and related expenses, except that the assets of such trust may be available to satisfy claims of the regulated entity's creditors or the Office of Finance's creditors in the case of insolvency; and

(vii) Payments pursuant to such plans shall not be in excess of the accrued liability computed in accordance with GAAP.

Entity-affiliated party means:

(1) With respect to the Office of Finance, any director, officer, or manager of the Office of Finance; and

(2) With respect to a regulated entity:

(i) Any director, officer, employee, or controlling stockholder of, or agent for, a regulated entity;

(ii) Any shareholder, affiliate, consultant, or joint venture partner of a regulated entity, and any other person as determined by the Director (by regulation or on a case-by-case basis) that participates in the conduct of the affairs of a regulated entity, provided that a member of a Federal Home Loan Bank shall not be deemed to have participated in the affairs of that Federal Home Loan Bank solely by virtue of being a shareholder of, and obtaining advances from, that Federal Home Loan Bank;

(iii) Any independent contractor for a regulated entity (including any attorney, appraiser, or accountant) if:

(A) The independent contractor knowingly or recklessly participates in any violation of any law or regulation, any breach of fiduciary duty, or any unsafe or unsound practice; and

(B) Such violation, breach, or practice caused, or is likely to cause, more than a minimal financial loss to, or a significant adverse effect on, the regulated entity;

(iv) Any not-for-profit corporation that receives its principal funding, on an ongoing basis, from any regulated entity.

Golden parachute payment means:

(1) Any payment (or any agreement to make any payment) in the nature of compensation by any regulated entity or the Office of Finance for the benefit of any current or former entity-affiliated party pursuant to an obligation of such regulated entity or the Office of Finance that:

(i) Is contingent on, or by its terms is payable on or after, the termination of such party's primary employment or affiliation with the regulated entity or the Office of Finance; and

(ii) Is received on or after, or is made in contemplation of, any of the following events:

(A) The insolvency (or similar event) of the regulated entity which is making the payment;

(B) The appointment of any conservator or receiver for such regulated entity; or

(C) The regulated entity is in a troubled condition.

(2) *Exceptions.* The term *golden parachute payment* shall not include:

(i) Any payment made pursuant to a pension or retirement plan that is qualified (or is intended within a reasonable period of time to be qualified) under section 401 of the Internal Revenue Code of 1986 (26 U.S.C. 401) or pursuant to a pension or other retirement plan that is governed by the laws of any foreign country;

(ii) Any payment made pursuant to a ''benefit plan'' as that term is defined in this section;

(iii) Any payment made pursuant to a ''bona fide deferred compensation plan or arrangement'' as that term is defined in this section;

(iv) Any payment made by reason of death or by reason of termination caused by the disability of an entity-affiliated party; or

(v) Any payment made pursuant to a nondiscriminatory severance pay plan or arrangement that provides for payment of severance benefits to all eligible employees upon involuntary termination other than for cause, voluntary resignation, or early retirement; provided that:

(A) No employee shall receive any such payment that exceeds the base compensation paid to such employee during the 12 months (or such longer period or greater benefit as the Director shall consent to) immediately preceding termination of employment, resignation, or early retirement, and such severance pay plan or arrangement shall not have been adopted, or modified to increase the amount or scope of severance benefits, at a time when the regulated entity or the Office of Finance is in a condition specified in paragraph (1)(ii) of the term *golden parachute payment* as defined in this section, or in contemplation of such a condition, without the prior written consent of the Director; and

(B) If an employee is an executive officer, as ''executive officer'' is defined under 12 CFR 1230.2, and such employee's base salary exceeds $300,000, then the exception provided under this paragraph (2)(v) shall not apply to that employee; or

(vi) Any severance or similar payment that is required to be made pursuant to a state statute or foreign law that is applicable to all employers within the appropriate jurisdiction (with the exception of employers that may be exempt due to their small number of employees or other similar criteria).

Nondiscriminatory means that the plan, contract, or arrangement in question applies to all employees of a regulated entity or the Office of Finance who meet reasonable and customary eligibility requirements applicable to all employees, such as minimum length of service requirements. A nondiscriminatory plan, contract, or arrangement may provide different benefits based only on objective criteria such as salary, total compensation, length of service, job grade, or classification, which are applied on a proportionate basis (with a variance in severance benefits relating to any criterion of plus or minus ten percent) to groups of employees consisting of not less than the lesser of 33 percent of employees or 1,000 employees.

Payment means:

(1) Any direct or indirect transfer of any funds or any asset;

(2) Any forgiveness of any debt or other obligation;

(3) The conferring of any benefit, including but not limited to stock options and stock appreciation rights; and

(4) Any segregation of any funds or assets, the establishment or funding of any trust or the purchase of or arrangement for any letter of credit or other instrument, for the purpose of making, or pursuant to any agreement to make, any payment on or after the date on which such funds or assets are segregated, or at the time of or after such trust is established or letter of credit or other instrument is made available, without regard to whether the obligation to make such payment is contingent on:

(i) The determination, after such date, of the liability for the payment of such amount; or

(ii) The liquidation, after such date, of the amount of such payment.

Troubled condition means a regulated entity that:

(1) Is subject to a cease-and-desist order or written agreement issued by FHFA that requires action to improve the financial condition of the regulated entity or is subject to a proceeding

initiated by the Director, which contemplates the issuance of an order that requires action to improve the financial condition of the regulated entity, unless otherwise informed in writing by FHFA;

(2) Is assigned a composite rating of 4 or 5 by FHFA under its CAMELSO examination rating system as it may be revised from time to time; or

(3) Is informed in writing by the Director that it is in a troubled condition for purposes of the requirements of this part on the basis of the most recent report of examination or other information available to FHFA, on account of its financial condition, risk profile, or management deficiencies.

■ 5. Section 1231.3 is added to read as follows:

§ 1231.3 Golden parachute payments.

(a) *Prohibited golden parachute payments.* No regulated entity or the Office of Finance shall make or agree to make any golden parachute payment, except as provided in this part.

(b) *Permissible golden parachute payments.* (1) A regulated entity or the Office of Finance may agree to make or may make a golden parachute payment if and to the extent that:

(i) The Director determines that such a payment or agreement is permissible; or

(ii) Such an agreement is made in order to hire a person to become an entity-affiliated party either at a time when the regulated entity or the Office of Finance satisfies, or in an effort to prevent it from imminently satisfying, any of the criteria set forth in paragraph (1)(ii) of the term *golden parachute payment* as defined in § 1231.2, and the Director consents in writing to the amount and terms of the golden parachute payment. Such consent by the Director shall not improve the entity-affiliated party's position in the event of the insolvency of the regulated entity or the Office of Finance since such consent can neither bind a receiver nor affect the provability of receivership claims; or

(iii) Such a payment is made pursuant to an agreement which provides for a reasonable severance payment, not to exceed 12 months salary, to an entity-affiliated party in the event of a change in control of the regulated entity or the Office of Finance; provided, however, that a regulated entity or the Office of Finance shall obtain the consent of the Director prior to making such a payment, and this paragraph (b)(1)(iii) shall not apply to any change in control of a regulated entity that results from the regulated entity being placed into conservatorship or receivership; and

(iv) A regulated entity or the Office of Finance making a request pursuant to paragraphs (b)(1)(i) through (iii) of this section shall demonstrate that it does not possess and is not aware of any information, evidence, documents, or other materials that would indicate that there is a reasonable basis to believe, at the time such payment is proposed to be made, that:

(A) The entity-affiliated party has committed any fraudulent act or omission, breach of trust or fiduciary duty, or insider abuse with regard to the regulated entity or the Office of Finance that is likely to have a material adverse effect on the regulated entity or the Office of Finance;

(B) The entity-affiliated party is substantially responsible for the insolvency of, the appointment of a conservator or receiver for, or the troubled condition of the regulated entity or the Office of Finance;

(C) The entity-affiliated party has materially violated any applicable Federal or State law or regulation that has had or is likely to have a material effect on the regulated entity or the Office of Finance; and

(D) The entity-affiliated party has violated or conspired to violate sections 215, 657, 1006, 1014, or 1344 of title 18 of the United States Code, or section 1341 or 1343 of such title affecting a ''financial institution'' as the term is defined in title 18 of the United States Code (18 U.S.C. 20).

(2) In making a determination under paragraphs (b)(1)(i) through (iii) of this section, the Director may consider:

(i) Whether, and to what degree, the entity-affiliated party was in a position of managerial or fiduciary responsibility;

(ii) The length of time the entity-affiliated party was affiliated with the regulated entity or the Office of Finance, and the degree to which the proposed payment represents a reasonable payment for services rendered over the period of employment; and

(iii) Any other factor the Director determines relevant to the facts and circumstances surrounding the golden parachute payment, including any fraudulent act or omission, breach of fiduciary duty, violation of law, rule, regulation, order, or written agreement, and the level of willful misconduct, breach of fiduciary duty, and malfeasance on the part of the entity-affiliated party.

■ 6. Section 1231.5 is revised to read as follows:

§ 1231.5 Applicability in the event of receivership.

The provisions of this part, or any consent or approval granted under the provisions of this part by FHFA, shall not in any way bind any receiver of a regulated entity in receivership. Any consent or approval granted under the provisions of this part by FHFA shall not in any way obligate FHFA or receiver to pay any claim or obligation pursuant to any golden parachute, severance, indemnification, or other agreement. Nothing in this part may be construed to permit the payment of salary or any liability or legal expense of an entity-affiliated party contrary to section 1318(e)(3) of the Safety and Soundness Act (12 U.S.C. 4518(e)(3)).

■ 7. Section 1231.6 is added to read as follows:

§ 1231.6 Filing instructions.

(a) *Scope.* This section contains the procedures to apply for the consent of the Director to make golden parachute payments under § 1231.3(b) (including entering into agreements to make such payments) or to make excess nondiscriminatory severance plan payments under paragraph (2)(v) of the term *golden parachute payment* as defined in § 1231.2.

(b) *Where to file.* A regulated entity or the Office of Finance must submit a letter application to the Manager, Executive Compensation, Division of Supervision Policy and Support, or to such other person as FHFA may direct.

(c) *Content of filing.* The letter application must contain the following:

(1) The reasons why the regulated entity or the Office of Finance seeks to make the payment;

(2) An identification of the entity-affiliated party who will receive the payment;

(3) A copy of any contract or agreement regarding the subject matter of the filing;

(4) The cost of the proposed payment and its impact on the capital and earnings of the regulated entity;

(5) The reasons why the consent to the payment should be granted; and

(6) Certification and documentation as to each of the factors listed in § 1231.3(b)(1)(iv).

(d) *Additional information.* FHFA may request additional information at any time during the processing of the letter application.

(e) *Written notice.* FHFA shall provide the applicant with written notice of the decision as soon as it is rendered.

Dated: January 15, 2014.

Melvin L. Watt,

Director, Federal Housing Finance Agency.

[FR Doc. 2014–01364 Filed 1–27–14; 8:45 am]

BILLING CODE 8070–01–P

DEPARTMENT OF HOMELAND SECURITY

Coast Guard

33 CFR Part 165

[Docket No. USCG–2013–1034]

RIN 1625–AA00

Safety Zone; BWRC Southwest Showdown Three; Parker, AZ

AGENCY: Coast Guard, DHS.

ACTION: Temporary final rule.

SUMMARY: The Coast Guard is establishing a temporary safety zone within the Lake Moolvalya region of the navigable waters of the Colorado River in Parker, Arizona in support of the Blue Water Resort and Casino (BWRC) and Arizona Drag Boat Association Southwest Showdown Three high speed boat race. This safety zone is necessary to provide for the safety of the participants, crew, spectators, participating vessels, and other vessels and users of the waterway. Persons and vessels are prohibited from entering into, transiting through, or anchoring within this safety zone unless authorized by the Captain of the Port, or his designated representative.

DATES: This rule is effective from 9 a.m. to 6 p.m. on February 21, 2014, through February 23, 2014.

ADDRESSES: Documents mentioned in this preamble are part of docket [USCG–2013–1034]. To view documents mentioned in this preamble as being available in the docket, go to *http://www.regulations.gov,* type the docket number in the ''SEARCH'' box and click ''SEARCH.'' Click on Open Docket Folder on the line associated with this rulemaking. You may also visit the Docket Management Facility in Room W12–140 on the ground floor of the Department of Transportation West Building, 1200 New Jersey Avenue SE., Washington, DC 20590, between 9 a.m. and 5 p.m., Monday through Friday, except Federal holidays.

FOR FURTHER INFORMATION CONTACT: If you have questions on this rule, call or email Petty Officer Giacomo Terrizzi, Waterways Management, U.S. Coast Guard Sector San Diego, Coast Guard; telephone 619–278–7656, email *d11marineeventssandiego@uscg.mil* If you have questions on viewing or submitting material to the docket, call Cheryl Collins, Program Manager, Docket Operations, telephone (202) 366–9826.

SUPPLEMENTARY INFORMATION:

Table of Acronyms

DHS Department of Homeland Security
FR Federal Register
NPRM Notice of Proposed Rulemaking
TFR Temporary Final Rule
BWRC Blue Water Resort and Casino

A. Regulatory History and Information

The Coast Guard is issuing this temporary final rule without prior notice and opportunity to comment pursuant to authority under section 4(a) of the Administrative Procedure Act (APA) (5 U.S.C. 553(b)). This provision authorizes an agency to issue a rule without prior notice and opportunity to comment when the agency for good cause finds that those procedures are ''impracticable, unnecessary, or contrary to the public interest.'' Under 5 U.S.C. 553(b)(B), the Coast Guard finds that good cause exists for not publishing a notice of proposed rulemaking (NPRM) with respect to this rule because an NPRM would be impracticable. Logistical details did not present the Coast Guard enough time to draft, publish, and receive public comment on an NPRM. As such, the event would occur before the rulemaking process was complete. Immediate action is needed to help protect the safety of the participants, crew, spectators, and participating vessels from other vessels during this three day event.

Under 5 U.S.C. 553(d)(3), for the same reasons mentioned above, the Coast Guard finds that good cause exists for making this rule effective less than 30 days after publication in the **Federal Register**. Any delay in the effective date of this rule would be contrary to the public interest, because immediate action is necessary to protect the safety of the participates from the dangers associated with other vessels transiting this area while the race occurs.

B. Basis and Purpose

The legal basis and authorities for this rule are found in 33 U.S.C. 1231, 46 U.S.C. Chapter 701, 3306, 3703; 50 U.S.C. 191, 195; 33 CFR 1.05–1, 6.04–1, 6.04–6, and 160.5; Public Law 107–295, 116 Stat. 2064; and Department of Homeland Security Delegation No. 0170.1, which collectively authorize the Coast Guard to propose, establish, and define regulatory safety zones. The Arizona Drag Boat Association is sponsoring the BWRC Southwest Showdown Three, which will involve 100 drag boats, 8 to 20 feet in length. These drag boats will be transiting a portion of Moovalya Lake on the Colorado River in Parker, AZ. This temporary safety zone is necessary to provide for the safety of the participants, crew, spectators, sponsor vessels, other vessels, and users of the waterway.

C. Discussion of the Final Rule

The Coast Guard is establishing a safety zone that will be enforced from 9 a.m. to 6 p.m. on February 21, 2014 through February 23, 2014. The limits of the safety zone will include all the navigable waters of the Colorado River between Headgate Dam and 0.5 miles north of the Blue Water Marina in Parker, Arizona. The safety zone is necessary to provide for the safety of the crew, spectators, participants, and other vessels and users of the waterway. Persons and vessels will be prohibited from entering into, transiting through, or anchoring with this safety zone unless authorized by the Captain of the Port, or his designated representative. The three day event will include practice races on Friday, and event official racing on Saturday and Sunday. Before the effective period, the Coast Guard will publish a local notice to mariners (LNM).

D. Regulatory Analyses

We developed this rule after considering numerous statutes and executive orders related to rulemaking. Below we summarize our analyses based on these statutes and executive orders.

1. Regulatory Planning and Review

This rule is not a significant regulatory action under section 3(f) of Executive Order 12866, Regulatory Planning and Review, as supplemented by Executive Order 13563, Improving Regulation and Regulatory Review, and does not require an assessment of potential costs and benefits under section 6(a)(3) of Executive Order 12866 or under section 1 of Executive Order 13563. The Office of Management and Budget has not reviewed it under those Orders. We expect the economic impact of this rule to be so minimal that a full Regulatory Evaluation is unnecessary. This determination is based on the size, location, and the limited duration of the safety zone. Additionally, to the maximum extent practicable, the event sponsor will assist with boaters wishing to transit the racing area during non-racing times throughout the three days.

2. Impact on Small Entities

The Regulatory Flexibility Act of 1980 (RFA), 5 U.S.C. 601–612, as amended, requires federal agencies to consider the potential impact of regulations on small entities during rulemaking. The term ''small entities'' comprises small businesses, not-for-profit organizations that are independently owned and operated and are not dominant in their fields, and governmental jurisdictions with populations of less than 50,000. The Coast Guard certifies under 5 U.S.C. 605(b) that this rule will not have a significant economic impact on a substantial number of small entities. This rule will affect the following entities, some of which may be small entities: the owners or operators of vessels intending to transit or anchor in the impacted portion of the Colorado River from 9 a.m. to 6 p.m. on February 21, 2014 through February 23, 2014.

This safety zone will not have a significant economic impact on a substantial number of small entities for the following reasons. Although the safety zone would apply to the entire width of the river, traffic would be allowed to pass through the zone with the permission of the Captain of the Port, or his designated representative. The event sponsor will also, to their maximum extent, assist boaters wishing to transit the racing area during non-racing times throughout the three days. Before the effective period, the Coast Guard will publish a Local Notice to Mariners.

3. Assistance for Small Entities

Under section 213(a) of the Small Business Regulatory Enforcement Fairness Act of 1996 (Pub. L. 104–121), we want to assist small entities in understanding this rule. If the rule would affect your small business, organization, or governmental jurisdiction and you have questions concerning its provisions or options for compliance, please contact the person listed in the **FOR FURTHER INFORMATION CONTACT**, above.

Small businesses may send comments on the actions of Federal employees who enforce, or otherwise determine compliance with, Federal regulations to the Small Business and Agriculture Regulatory Enforcement Ombudsman and the Regional Small Business Regulatory Fairness Boards. The Ombudsman evaluates these actions annually and rates each agency's responsiveness to small business. If you wish to comment on actions by employees of the Coast Guard, call 1–888–REG–FAIR (1–888–734–3247). The Coast Guard will not retaliate against small entities that question or complain about this rule or any policy or action of the Coast Guard.

4. Collection of Information

This rule calls for no new collection of information under the Paperwork Reduction Act of 1995 (44 U.S.C. 3501–3520).

5. Federalism

A rule has implications for federalism under Executive Order 13132, Federalism, if it has a substantial direct effect on the States, on the relationship between the national government and the States, or on the distribution of power and responsibilities among the various levels of government. We have analyzed this rule under that Order and determined that this rule does not have implications for federalism.

6. Protest Activities

The Coast Guard respects the First Amendment rights of protesters. Protesters are asked to contact the person listed in the **FOR FURTHER INFORMATION CONTACT** section to coordinate protest activities so that your message can be received without jeopardizing the safety or security of people, places or vessels.

7. Unfunded Mandates Reform Act

The Unfunded Mandates Reform Act of 1995 (2 U.S.C. 1531–1538) requires Federal agencies to assess the effects of their discretionary regulatory actions. In particular, the Act addresses actions that may result in the expenditure by a State, local, or tribal government, in the aggregate, or by the private sector of $100,000,000 or more in any one year. Though this rule will not result in such an expenditure, we do discuss the effects of this rule elsewhere in this preamble.

8. Taking of Private Property

This rule will not cause a taking of private property or otherwise have taking implications under Executive Order 12630, Governmental Actions and Interference with Constitutionally Protected Property Rights.

9. Civil Justice Reform

This rule meets applicable standards in sections 3(a) and 3(b)(2) of Executive Order 12988, Civil Justice Reform, to minimize litigation, eliminate ambiguity, and reduce burden.

10. Protection of Children

We have analyzed this rule under Executive Order 13045, Protection of Children from Environmental Health Risks and Safety Risks. This rule is not an economically significant rule and does not create an environmental risk to health or risk to safety that may disproportionately affect children.

11. Indian Tribal Governments

This rule does not have tribal implications under Executive Order 13175, Consultation and Coordination with Indian Tribal Governments, because it does not have a substantial direct effect on one or more Indian tribes, on the relationship between the Federal Government and Indian tribes, or on the distribution of power and responsibilities between the Federal Government and Indian tribes.

12. Energy Effects

This action is not a ''significant energy action'' under Executive Order 13211, Actions Concerning Regulations That Significantly Affect Energy Supply, Distribution, or Use.

13. Technical Standards

This rule does not use technical standards. Therefore, we did not consider the use of voluntary consensus standards.

14. Environment

We have analyzed this rule under Department of Homeland Security Management Directive 023–01 and Commandant Instruction M16475.lD, which guide the Coast Guard in complying with the National Environmental Policy Act of 1969 (NEPA) (42 U.S.C. 4321–4370f), and have determined that this action is one of a category of actions that do not individually or cumulatively have a significant effect on the human environment. This rule involves establishment of a safety zone on the navigable waters of Moovalya Lake. This rule is categorically excluded from further review under paragraph 34(g) of Figure 2–1 of the Commandant Instruction. An environmental analysis checklist supporting this determination and a Categorical Exclusion Determination are available in the docket where indicated under **ADDRESSES**. We seek any comments or information that may lead to the discovery of a significant environmental impact from this rule.

List of Subjects in 33 CFR Part 165

Harbors, Marine safety, Navigation (water), Reporting and recordkeeping requirements, Security measures, Waterways.

For the reasons discussed in the preamble, the Coast Guard amends 33 CFR part 165 as follows:

PART 165—REGULATED NAVIGATION AREAS AND LIMITED ACCESS AREAS

■ 1. The authority citation for part 165 continues to read as follows:

Authority: 33 U.S.C. 1231; 46 U.S.C. Chapter 701, 3306, 3703; 50 U.S.C. 191, 195; 33 CFR 1.05–1, 6.04–1, 6.04–6, and 160.5; Pub. L. 107–295, 116 Stat. 2064; Department of Homeland Security Delegation No. 0170.1.

■ 2. Add § 165.T11–615 to read as follows:

§ 165.T11–615 Safety zone; BWRC Southwest Showdown Three, Parker, AZ

(a) *Location.* The limits of the safety zone will include all the navigable waters of the Colorado River on Moovalya Lake between Headgate Dam and 0.5 miles north of the Blue Water Marina in Parker, Arizona.

(b) *Enforcement period.* This section will be enforced from 9 a.m. to 6 p.m. from February 21, 2014 through February 23, 2014.

(c) *Definitions.* The following definition applies to this section:

Designated representative, means any commissioned, warrant, or petty officer of the Coast Guard on board Coast Guard, Coast Guard Auxiliary, or local, state, and federal law enforcement vessels who have been authorized to act on the behalf of the Captain of the Port.

(d) *Regulations.* (1) Entry into, transit through or anchoring within this safety zone is prohibited unless authorized by the Captain of the Port of San Diego or his designated representative.

(2) All persons and vessels shall comply with the instructions of the Coast Guard Captain of the Port or his designated representative.

(3) Upon being hailed by U.S. Coast Guard or designated patrol personnel by siren, radio, flashing light or other means, the operator of a vessel shall proceed as directed.

(4) The Coast Guard may be assisted by other federal, state, or local agencies.

Dated: January 9, 2014.

S.M. Mahoney,

Captain, U.S. Coast Guard, Captain of the Port San Diego.

[FR Doc. 2014–01562 Filed 1–27–14; 8:45 am]

BILLING CODE 9110–04–P

ENVIRONMENTAL PROTECTION AGENCY

40 CFR Parts 30 and 31

[EPA–HQ–OARM–2013–0705; FRL–9803–9]

Changes to Dispute Procedures

AGENCY: Environmental Protection Agency (EPA).

ACTION: Interim final rule with request for comments.

SUMMARY: This regulatory update revises agency policies and procedures for certain pre-award and post-award assistance agreement disputes at the United States Environmental Protection Agency. This section provides a uniform process, including appropriate timelines, for the efficient, effective and timely resolution of assistance agreement disputes. This rule is exempt from the notice and comment requirements of the Administrative Procedure Act (APA) because it is a matter relating to agency management concerning grants.

DATES: *Effective date:* January 28, 2014.

Comment date: Comments must be received on or before March 31, 2014.

Applicability date: This interim final rule applies to disputes arising from agency decisions issued on or after January 28, 2014. Disputes arising from agency decisions issued prior to the effective date of this rule will remain subject to the procedures in the prior regulations.

ADDRESSES: Submit your comments, identified by Docket ID No. EPA–HQ–OARM–2013–0705, by one of the following methods:

- *www.regulations.gov:* Follow the on-line instructions for submitting comments.
- *Email: January.elizabeth@epa.gov.*
- *Mail:* OARM Docket, Environmental Protection Agency, Mailcode: 28221T, 1200 Pennsylvania Ave., NW., Washington, DC 20460].
- *Hand Delivery:* EPA Docket Center, WJC West, Room 3334, 1301 Constitution Ave. NW., Washington, DC 20004. The telephone number for the Docket Center is 202–566–1744. For additional information about EPA's public docket, visit *http://www.epa.gov/dockets.* Such deliveries are only accepted during the Docket's normal hours of operation: 8:30 a.m. to 4:30 p.m., and special arrangements should be made for deliveries of boxed information.

Instructions: Direct your comments to Docket ID No. EPA–HQ–OARM–2013–0705. EPA's policy is that all comments received will be included in the public docket without change and may be made available online at *http://www.regulations.gov*, including any personal information provided, unless the comment includes information claimed to be Confidential Business Information (CBI) or other information whose disclosure is restricted by statute. Do not submit information that you consider to be CBI or otherwise protected through *www.regulations.gov* or email. The *www.regulations.gov* Web site is an ''anonymous access'' system, which means EPA will not know your identity or contact information unless you provide it in the body of your comment. If you send an email comment directly to EPA without going through *www.regulations.gov* your email address will be automatically captured and included as part of the comment that is placed in the public docket and made available on the Internet. If you submit an electronic comment, EPA recommends that you include your name and other contact information in the body of your comment and with any disk or CD–ROM you submit. If EPA cannot read your comment due to technical difficulties and cannot contact you for clarification, EPA may not be able to consider your comment. Electronic files should avoid the use of special characters, any form of encryption, and be free of any defects or viruses.

Docket: All documents in the docket are listed in the *www.regulations.gov* index. Although listed in the index, some information is not publicly available, e.g., CBI or other information whose disclosure is restricted by statute. Certain other material, such as copyrighted material, will be publicly available only in hard copy. Publicly available docket materials are available either electronically in *www.regulations.gov* or in hard copy at Docket ID No. EPA–HQ–OARM–2013–0705. OARM Docket, EPA/DC, EPA West, Room 3334, 1301 Constitution Ave. NW., Washington, DC. The Public Reading Room is open from 8:30 a.m. to 4:30 p.m., Monday through Friday, excluding legal holidays. The telephone number for the Public Reading Room is (202) 566–1744, and the telephone number for the OARM Docket is (202) 566–1752.

FOR FURTHER INFORMATION CONTACT: Elizabeth January, National Policy Training and Compliance Division in the Office of Grants and Debarment (3903R), Environmental Protection Agency, 1200 Pennsylvania Avenue NW., Washington, DC 20460; telephone number: 617–918–8655; fax number: 617–918–8555; email address: *january.elizabeth@epa.gov.*

SUPPLEMENTARY INFORMATION:

I. General Information

A. Affected Entities

Entities affected by this action are those that apply for and/or receive Federal financial assistance (grants, cooperative agreements or fellowships) from EPA including but not limited to:

State and local governments, Indian Tribes, Intertribal Consortia, Institutions of Higher Education, Hospitals, and other Non-profit Organizations, and Individuals.

II. Background

On September 21, 2011, the EPA Office of Inspector General (OIG) issued a final audit report entitled ''EPA Should Improve Timeliness for Resolving Audits under Appeal'' (Report No. 11–P–0687, ''Report''). The Report cited examples where appeals of Agency decisions to sustain some or all of the questioned costs in OIG audits of awards had been in resolution for 10 to 21 years. The Report recommended, among other things, reforms to EPA's dispute resolution process for audit appeals, including establishing timelines and milestones for each step of the resolution process, limits on time extensions and the submission of additional documentation, and limits on the number of opportunities to request reconsideration of decisions by an Assistant Administrator or Regional Administrator. In response to the Inspector General dated December 19, 2011, EPA agreed to implement these reforms.

While the OIG's recommended reforms specifically addressed the resolution of audit appeals, EPA believes there is merit to applying the reforms more broadly to ensure timely resolution of other types of disputes between the Agency and recipients of, or applicants for, an assistance agreement. Accordingly, EPA is revising its assistance agreement dispute procedures in 40 CFR parts 30 and 31 subpart F to generally apply the OIG's recommendations to all monetary and non-monetary pre-award and post-award disputes. The only exception is for disputes involving applicants for competitive assistance agreements, which are governed by the procedures set forth at 70 FR 3629 et seq that can be found at *http://www.epa.gov/ogd/competition/70fr3629.pdf.* EPA is not addressing these procedures in this rulemaking since they currently provide a meaningful, timely and effective process for resolving assistance agreement competition-related disputes and disagreements.

In addition, this rule does not apply to any appeal process regarding an award official's determination that an entity is not qualified for an award that may be developed under guidance implementing Section 872 of the Duncan Hunter National Defense Authorization Act for Fiscal Year 2009 (Pub. L. 110–417, as amended).

Consistent with the Report recommendations, this revision will streamline the resolution process for covered disputes by establishing submission and decision-making timelines for each stage of the process (with provisions for extensions in the interest of fairness and equity), specifying the contents of submissions and the administrative record, and, for Regional decisions, eliminating petitions for discretionary review to EPA Assistant Administrators. Viewed as a whole, EPA believes these reforms will make the dispute process more timely and efficient for applicants and recipients while providing them a full and fair opportunity to present their case.

Besides incorporating the OIG's recommendations, this revision updates the list of determinations made pursuant to other Agency decision-making processes that may affect assistance agreements but that are not subject to review under this section or the Agency's procedures for resolving assistance agreement competition-related disputes or disagreements.

7 U.S.C. 135 *et seq.,* 15 U.S.C. 2601 *et seq.,* 33 U.S.C. 1251 *et seq.,* 42 U.S.C. 241, 242b, 243, 246, 300f, 300j–1, 300j–2, 300j–3, 1857 *et seq.,* 6901 *et seq.,* 7401 *et seq.,* 9601 *et seq.,* OMB Circular A–110 (64 FR 54926, October 8, 1999), 20 U.S.C. 4011 *et seq.,* and 33 U.S.C. 1401 *et seq.*

III. Statutory and Executive Order Reviews

A. Executive Order 12866: Regulatory Planning and Review

This action is not a ''significant regulatory action'' under the terms of Executive Order 12866 (58 FR 51735, October 4, 1993) and is therefore not subject to review under Executive Orders 12866 and 13563 (76 FR 3821, January 21, 2011). This action will provide a uniform process, including appropriate timelines for the efficient, effective and timely resolution of assistance agreement disputes.

B. Paperwork Reduction Act

This action does not impose any new information collection burden. However, the Office of Management and Budget (OMB) has previously approved the information collection requirements contained in the existing regulations 40 CFR parts 30.63 and 31.70 under the provisions of the *Paperwork Reduction Act,* 44 U.S.C. 3501 *et seq.* and has assigned OMB control number 2030–0020. The OMB control numbers for EPA's regulations in 40 CFR are listed in 40 CFR part 9.

C. Regulatory Flexibility Act

Today's interim final rule is not subject to the Regulatory Flexibility Act (RFA), which generally requires an agency to prepare a regulatory flexibility analysis for any rule that will have a significant economic impact on a substantial number of small entities. The RFA applies only to rules subject to notice and comment rulemaking requirements under the Administrative Procedure Act (APA) or any other statute. This rule is not subject to notice and comment requirements under the APA or any other statute because this rule pertains to grants, which the APA expressly exempts from notice and comment rulemaking requirements. 5 U.S.C. 553(a)(2).

D. Unfunded Mandates Reform Act

This action contains no Federal mandates under the provisions of Title II of the Unfunded Mandates Reform Act of 1995 (UMRA), 2 U.S.C. 1531–1538 for State, local, or tribal governments or the private sector. The action imposes no enforceable duty on any State, local or tribal governments or the private sector. Therefore, this action is not subject to the requirements of sections 202 or 205 of the UMRA.

This action is also not subject to the requirements of section 203 of UMRA because it contains no regulatory requirements that might significantly or uniquely affect small governments. This action affects all applicants and recipients of EPA financial federal assistance and therefore no one entity type will be impacted disproportionally or significantly.

E. Executive Order 13132 (Federalism)

This action does not have federalism implications. It will not have substantial direct effects on the States, on the relationship between the national government and the States, or on the distribution of power and responsibilities among the various levels of government, as specified in Executive Order 13132. This action affects all applicants and recipients of EPA financial federal assistance and therefore no one entity type will be impacted disproportionally. Thus, Executive Order 13132 does not apply to this action.

F. Executive Order 13175

This action does not have tribal implications, as specified in Executive Order 13175 (65 FR 67249, November 9, 2000). This action affects all applicants and recipients of EPA financial federal assistance and therefore no one entity type will be impacted disproportionally. Thus, Executive Order 13175 does not

apply to this action. Although Executive Order 13175 does not apply to this action, EPA has made a conscious effort to engage tribal entities on changes to federal financial assistance requirements. EPA published materials summarizing these changes which can be found at *http://www.epa.gov/ogd/grants/regulations.htm.* EPA intends to host informational sessions tailored to tribal entities.

G. Executive Order 13045: Protection of Children From Environmental Health Risks and Safety Risks

This action is not subject to EO 13045 (62 FR 19885, April 23, 1997) because it is not economically significant as defined in EO 12866.

H. Executive Order 13211: Actions Concerning Regulations That Significantly Affect Energy Supply, Distribution, or Use

This action is not subject to Executive Order 13211 (66 FR 28355, May 22, 2001), because it is not a significant regulatory action under Executive Order 12866.

I. National Technology Transfer and Advancement Act

Section 12(d) of the National Technology Transfer and Advancement Act of 1995 (''NTTAA''), Public Law 104–113, 12(d) (15 U.S.C. 272 note) directs EPA to use voluntary consensus standards in its regulatory activities unless to do so would be inconsistent with applicable law or otherwise impractical. Voluntary consensus standards are technical standards (e.g., materials specifications, test methods, sampling procedures, and business practices) that are developed or adopted by voluntary consensus standards bodies. NTTAA directs EPA to provide Congress, through OMB, explanations when the Agency decides not to use available and applicable voluntary consensus standards.

This action does not involve technical standards. Therefore, EPA did not consider the use of any voluntary consensus standards.

J. Executive Order 12898: Federal Actions To Address Environmental Justice in Minority Populations and Low-Income Populations

Executive Order (EO) 12898 (59 FR 7629, Feb. 16, 1994) establishes federal executive policy on environmental justice. Its main provision directs federal agencies, to the greatest extent practicable and permitted by law, to make environmental justice part of their mission by identifying and addressing, as appropriate, disproportionately high and adverse human health or environmental effects of their programs, policies, and activities on minority populations and low-income populations in the United States.

EPA has concluded that it is not practicable to determine whether there would be disproportionately high and adverse human health or environmental effects on minority and/or low income populations from this final rule.

K. Congressional Review Act

The Congressional Review Act, 5 U.S.C. 801 et seq., as added by the Small Business Regulatory Enforcement Fairness Act of 1996, generally provides that before a rule may take effect, the agency promulgating the rule must submit a rule report, which includes a copy of the rule, to each House of the Congress and to the Comptroller General of the United States. Section 808 allows the issuing agency to make a rule effective sooner than otherwise provided by the CRA if the agency makes a good cause finding that notice and public procedure is impracticable, unnecessary or contrary to the public interest. This determination must be supported by a brief statement. 5 U.S.C. 808(2). EPA will submit a report containing this rule and other required information to the U.S. Senate, the U.S. House of Representatives, and the Comptroller General of the United States prior to publication of the rule in the **Federal Register**. This action is not a ''major rule'' as defined by 5 U.S.C. 804(2). This interim final rule applies to disputes arising from agency decisions issued on or after January 28, 2014. Disputes arising from agency decisions issued prior to the effective date of this rule will remain subject to the procedures in the prior regulations.

List of Subjects

40 CFR Part 30

Environmental protection, Accounting, Grant programs, Reporting and recordkeeping requirements.

40 CFR Part 31

Environmental protection, Accounting, Administrative practice and procedure, Grant programs, Reporting and recordkeeping requirements.

Dated: January 6, 2014.

Gina McCarthy,

Administrator.

For the reasons set forth in the preamble, the Environmental Protection Agency amends 40 CFR parts 30 and 31 as follows:

PART 30—UNIFORM ADMINISTRATIVE REQUIREMENTS FOR GRANTS AND AGREEMENTS WITH INSTITUTIONS OF HIGHER EDUCATION, HOSPITALS, AND OTHER NON-PROFIT ORGANIZATIONS

■ 1. The authority citation for part 30 continues to read as follows:

Authority: 7 U.S.C. 135 *et seq.,* 15 U.S.C. 2601 *et seq.,* 33 U.S.C. 1251 *et seq.,* 42 U.S.C. 241, 242b, 243, 246, 300f, 300j–1, 300j–2, 300j–3, 1857 *et seq.,* 6901 *et seq.,* 7401 *et seq.,* 9601 *et seq.,* and OMB Circular A–110 (64 FR 54926, October 8, 1999).

■ 2. Revise § 30.63 to read as follows:

§ 30.63 Disputes.

Pre-award and post-award dispute procedures for EPA assistance agreements are outlined at 40 CFR part 31, subpart F.

PART 31—UNIFORM ADMINISTRATIVE REQUIREMENTS FOR GRANTS AND COOPERATIVE AGREEMENTS TO STATE AND LOCAL GOVERNMENTS

■ 3. The authority citation for part 31 continues to read as follows:

Authority: 33 U.S.C. 1251 *et seq.,* 42 U.S.C. 7401 *et seq.,* 42 U.S.C. 6901 *et seq.,* 42 U.S.C. 300f *et seq.,* 7 U.S.C. 136 *et seq.,* 15 U.S.C. 2601 *et seq.,* 42 U.S.C. 9601 *et seq.,* 20 U.S.C. 4011 *et seq.,* and 33 U.S.C. 1401 *et seq.*

■ 4. Revise subpart F, consisting of §§ 31.70 through 31.77, to read as follows:

Subpart F—Disputes

Sec.
31.70 Purpose and scope of this part.
31.71 Definitions.
31.72 Submission of Appeal.
31.73 Notice of receipt of Appeal to Affected Entity.
31.74 Determination of Appeal.
31.75 Request for review.
31.76 Notice of receipt of request for review.
31.77 Determination of request for review.

§ 31.70 Purpose and scope of this part.

(a) This section provides the process for the resolution of pre-award and post-award assistance agreement disputes as described in § 31.71, except for:

(1) Assistance agreement competition-related disputes; and

(2) Any appeal process relating to an award official's determination that an entity is not qualified for award that may be developed pursuant to guidance implementing Section 872 of the Duncan Hunter National Defense Authorization Act for Fiscal Year 2009 (Pub. L. 110–417, as amended).

(b) Pre-award and post-award disagreements between affected entities

and EPA related to an assistance agreement should be resolved at the lowest level possible. If an agreement cannot be reached, absent any other applicable statutory or regulatory dispute provisions, affected entities must follow the dispute procedures outlined in this subpart.

(c) Determinations affecting assistance agreements made under other Agency decision-making processes are not subject to review under the procedures in this Subpart or the Agency's procedures for resolving assistance agreement competition-related disputes. These determinations include, but are not limited to:

(1) Decisions on requests for exceptions under § 31.6;

(2) Bid protest decisions under § 31.36(b)(12);

(3) National Environmental Policy Act decisions under part 6;

(4) Policy decisions of the EPA Internal Audit Dispute Resolution Process (formerly known as Audit Resolution Board); and

(5) Suspension and Debarment Decisions under 2 CFR parts 180 and 1532.

§ 31.71 Definitions.

As used in this part:

Action Official (AO) is the EPA official who authors the Agency Decision to the Affected Entity regarding a pre-award or post-award matter.

Affected Entity is an entity that applies for and/or receives Federal financial assistance from EPA including but not limited to: State and local governments, Indian Tribes, Intertribal Consortia, Institutions of Higher Education, Hospitals, and other Non-profit Organizations, and Individuals.

Agency Decision is the Agency's initial pre-award or post-award determination. The Agency Decision is sent by the Action Official (AO) to the Affected Entity electronically and informs them of their dispute rights including appealing the Agency Decision to the DDO.

*Assistance Agreement Appeal (*or Appeal*)* is the letter an Affected Entity submits to the DDO to challenge an Agency Decision.

Dispute is a disagreement by an Affected Entity with a specific Agency Decision regarding a pre-award or post-award action.

Disputes Decision Official (DDO) is the designated agency official responsible for issuing a decision resolving an Appeal.

(1) The DDO for a Headquarters Assistance Agreement Appeal is the Director of the Grants and Interagency Agreement Management Division in the Office of Grants and Debarment or designee. To help provide for a fair and impartial review, the AO for the challenged Agency Decision may not serve as the Headquarters DDO and the DDO cannot serve as the Review Official for the Appeal decision.

(2) The DDO for a Regional Assistance Agreement Appeal is the official designated by the Regional Administrator to issue the written decision resolving the Appeal. To help provide for a fair and impartial review, the AO for the challenged Agency Decision may not serve as the Regional DDO and the DDO cannot serve as the Review Official for the Appeal decision.

Request for Review is the letter an Affected Entity submits to the designated Review Official to challenge the DDO's Appeal decision.

Review Official is the EPA official responsible for issuing a decision resolving an Affected Entity's request for review of a DDO's Appeal decision.

(1) For a Headquarters DDO Appeal decision, the Review Official is the Director of the Office of Grants and Debarment or designee.

(2) For a Regional DDO Appeal decision, the Review Official is the Regional Administrator or designee.

§ 31.72 Submission of Appeal.

An Affected Entity or its authorized representative may dispute an Agency Decision by electronically submitting an Appeal to the DDO identified in the Agency Decision. In order for the DDO to consider the Appeal, it must satisfy the following requirements:

(a) *Timeliness.* The DDO must receive the Appeal no later than 30 calendar days from the date the Agency Decision is electronically sent to the Affected Entity. The DDO will dismiss any Appeal received after the 30-day period unless the DDO grants an extension of time to submit the Appeal. The Affected Entity must submit a written request for extension to the DDO before the expiration of the 30-day period. The DDO may grant a one-time extension of up to 30 calendar days when justified by the situation, which may include the unusual complexity of the Appeal or because of exigent circumstances.

(b) *Method of submission.* The Affected Entity must submit the Appeal electronically via email to the DDO, with a copy to the AO, using the email addresses specified in the Agency Decision within the 30-day period stated in paragraph (a) of this section.

(c) *Contents of Appeal.* The Appeal submitted to the DDO must include:

(1) A copy of the disputed Agency Decision;

(2) A detailed statement of the specific legal and factual grounds for the Appeal, including copies of any supporting documents;

(3) The specific remedy or relief the Affected Entity seeks under the Appeal; and

(4) The name and contact information, including email address, of the Affected Entity's designated point of contact for the Appeal.

§ 31.73 Notice of receipt of Appeal to Affected Entity.

Within 15 calendar days of receiving the Appeal, the DDO will provide the Affected Entity a written notice, sent electronically, acknowledging receipt of the Appeal.

(a) *Timely Appeals.* If the Appeal was timely submitted, the notice of acknowledgement may identify any additional information or documentation that is required for a thorough consideration of the Appeal. The notice should provide no more than 30 calendar days for the Affected Entity to provide the requested information. If it is not feasible to identify such information or documentation in the notice the DDO may request it at a later point in time prior to Appeal resolution.

(b) *Untimely Appeals.* If the DDO did not receive the Appeal within the required 30-day period, or any extension of it, the DDO will notify the Affected Entity that the Appeal is being dismissed as untimely and the Agency Decision of the AO becomes final. The notification will also identify the Review Official. The dismissal of an untimely Appeal constitutes the final agency action, unless further review is sought in accordance with the requirements of § 31.75. In limited circumstances, the DDO may, as a matter of discretion, consider an untimely Appeal if doing so would be in the interests of fairness and equity.

§ 31.74 Determination of Appeal.

(a) *Record on Appeal.* In determining the merits of the Appeal, the DDO will consider the record related to the Agency Decision, any documentation that the Affected Entity submits with its Appeal, any additional documentation submitted by the Affected Entity in response to the DDO's request under § 31.73(a), and any other information the DDO determines is relevant to the Appeal provided the DDO gives notice of that information to the Affected Entity. The Affected Entity may not on its own initiative submit any additional documents.

(b) *Appeal decision.* The DDO will issue the Appeal decision within 180 calendar days from the date the Appeal

is received by the DDO unless a longer period is necessary based on the complexity of the legal, technical and factual issues presented. The DDO will notify the Affected Entity if the expected decision will not be issued within the 180 day period and if feasible will indicate when the decision is expected to be issued. The Appeal decision will also identify the Review Official. The DDO will issue the Appeal decision electronically. The DDO's decision will constitute the final agency action unless the Affected Entity files a timely request for review in accordance with the Request for Review procedures in § 31.75.

§ 31.75 Request for review.

An Affected Entity may file an electronic written request for review of the DDO's Appeal decision to the appropriate Review Official within 15 calendar days from the date the Appeal decision is electronically sent to the Affected Entity. The request for review must comply with the following requirements:

(a) *Submission of request for review.* The request must be submitted to the Review Official identified in the Appeal decision as follows:

(1) If a Headquarters DDO issued the Appeal decision, the request must be electronically submitted to the Director of the Office of Grants and Debarment, or designee, at the email address identified in the Appeal decision, with a copy to the DDO.

(2) If the Appeal decision was issued by a DDO located in an agency Regional Office, the request for review must be electronically submitted to the Regional Administrator, or designee, at the email address identified in the Appeal decision, with a copy to the DDO.

(b) *Contents and grounds of request for review.* The request for review must include a copy of the DDO's Appeal decision and provide a detailed statement of the factual and legal grounds warranting reversal or modification of the Appeal decision. The only ground for review of a DDO's Appeal decision is that there was a clear and prejudicial error of law, fact or application of agency policy in deciding the Appeal.

(c) *Conducting the review.* In reviewing the Appeal decision, the Review Official will only consider the information that was part of the Appeal decision unless:

(i) The Affected Entity provides new information in the request for review that was not available to the DDO for the Appeal decision; and

(ii) The Review Official determines that the new information is relevant and should be considered in the interests of fairness and equity.

§ 31.76 Notice of receipt of request for review.

Timeliness. The Review Official will provide the Affected Entity electronic written notice acknowledging receipt of the review request within 15 calendar days of receiving the request. The Review Official will further provide a copy of the notice to the DDO.

(a) If the request was submitted in accordance with section § 31.75, the notice of acknowledgment will also advise the Affected Entity that the Review Official expects to issue a decision within 45 calendar days from the date they received the request.

(b) If the request for review was not submitted within the required 15 calendar day period, or does not allege reviewable grounds consistent with § 31.75, the Review Official will notify the Affected Entity that the request is denied as untimely and/or for failing to state a valid basis for review. In limited circumstances, the Review Official may, as a matter of discretion, consider an untimely review if doing so would be in the interest of fairness and equity.

§ 31.77 Determination of request for review.

(a) Within 15 calendar days of receiving a copy of the notice acknowledging the receipt of a timely and reviewable Request for Review, the DDO will submit the Appeal record to the Review Official.

(b) The Review Official will issue a final written decision within 45 calendar days of the submission of the request for review unless a longer period is necessary based on the complexity of the legal, technical and factual issues presented.

(1) The Review Official will notify the Affected Entity if the expected decision will not be issued within the 45-day period and if feasible will indicate when the decision is expected to be issued.

(2) The Review Official's decision constitutes the final agency action and is not subject to further review within the agency.

[FR Doc. 2014–00963 Filed 1–27–14; 8:45 am]

BILLING CODE 6560–50–P

ENVIRONMENTAL PROTECTION AGENCY

40 CFR Part 52

[EPA–R04–OAR–2013–0173; FRL–9904–91–Region 4]

Air Quality Implementation Plan; Alabama; Attainment Plan for the Troy Area 2008 Lead Nonattainment Area

AGENCY: Environmental Protection Agency (EPA).

ACTION: Final rule.

SUMMARY: The Environmental Protection Agency (EPA) is taking final action to approve a state implementation plan (SIP) revision, submitted by the State of Alabama through the Alabama Department of Environmental Management (ADEM), to EPA on November 9, 2012, for the purpose of providing for attainment of the 2008 Lead (Pb) National Ambient Air Quality Standards (NAAQS) in the Troy 2008 Lead nonattainment area (hereafter referred to as the ''Troy Area'' or ''Area''). The Troy Area is comprised of a portion of Pike County in Alabama surrounding the Sanders Lead Company (hereafter referred to as ''Sanders Lead''). EPA is taking final action to approve Alabama's November 9, 2012 SIP submittal regarding the attainment plan based on Alabama's attainment demonstration for the Troy Area. The attainment plan includes the base year emissions inventory requirements, an analysis of the reasonably available control technology (RACT) and reasonably available control measures (RACM) requirements, reasonable further progress (RFP) plan, modeling demonstration of lead attainment and contingency measures for the Troy Area. This action is being taken in accordance with Clean Air Act (CAA or Act).

DATES: This rule is effective February 27, 2014.

ADDRESSES: EPA has established a docket for this action under Docket Identification No. EPA–R04–OAR–2013–0173. All documents in the docket are listed on the *www.regulations.gov* Web site. Although listed in the index, some information is not publicly available, i.e., Confidential Business Information or other information whose disclosure is restricted by statute. Certain other material, such as copyrighted material, is not placed on the Internet and will be publicly available only in hard copy form. Publicly available docket materials are available either electronically through *www.regulations.gov* or in hard copy at the Regulatory Development Section, Air Planning Branch, Air, Pesticides and

Toxics Management Division, U.S. Environmental Protection Agency, Region 4, 61 Forsyth Street SW., Atlanta, Georgia 30303–8960. EPA requests that if at all possible, you contact the person listed in the **FOR FURTHER INFORMATION CONTACT** section to schedule your inspection. The Regional Office's official hours of business are Monday through Friday, 8:30 a.m. to 4:30 p.m., excluding federal holidays.

FOR FURTHER INFORMATION CONTACT: Zuri Farngalo, Regulatory Development Section, Air Planning Branch, Air, Pesticides and Toxics Management Division, U.S. Environmental Protection Agency, Region 4, 61 Forsyth Street SW., Atlanta, Georgia 30303–8960. Zuri Farngalo may be reached by phone at (404) 562–9152 or via electronic mail at *farngalo.zuri@epa.gov*.

SUPPLEMENTARY INFORMATION:

Table of Contents

I. What is the background for this action?
II. What is the action EPA is taking?
III. Why is EPA taking this action?
IV. What are EPA's responses to comments to Alabama's November 9, 2012 SIP submission?
V. Final action
VI. Statutory and executive order reviews

I. What is the background for this action?

On November 12, 2008 (73 FR 66964), EPA revised the Lead NAAQS, lowering the level from 1.5 micrograms per cubic meter (μg/m^3) to 0.15 μg/m^3 calculated over a 3-month rolling average. EPA established the NAAQS based on significant evidence and numerous health studies demonstrating that serious health effects are associated with exposures to lead emissions.

Following promulgation of a new or revised NAAQS, EPA is required by the CAA to designate areas throughout the United States as attaining or not attaining the NAAQS; this designation process is described in section 107(d)(1) of the CAA. On November 22, 2010 (75 FR 71033), EPA promulgated initial air quality designations for the 2008 Lead NAAQS, which became effective on December 31, 2010, based on air quality monitoring data for calendar years 2007–2009, where there was sufficient data to support a nonattainment designation. Designations for all remaining areas were completed on November 22, 2011 (76 FR 72097), which became effective on December 31, 2011, based on air quality monitoring data for calendar years 2008–2010. Effective December 31, 2010, the Troy Area was designated as nonattainment for the 2008 Lead NAAQS. This designation triggered a requirement for Alabama to submit a SIP revision with a plan for how the Area would attain the 2008 Lead NAAQS, as expeditiously as practicable but no later than December 31, 2015.

EPA provided some guidance on attainment planning requirements for the Lead NAAQS in the November 2008 final rule promulgating the NAAQS.[1] In addition, in July 2011, EPA provided additional guidance and clarification in the form of a memorandum with questions and answers on Lead NAAQS implementation.[2] In April 2012, EPA also released the ''SIP Toolkit—Attainment Demonstrations and Air Quality Modeling'' (located at *http://www.epa.gov/air/lead/kitmodel.html*) [3] with further guidance on air quality modeling for attainment demonstrations.

ADEM submitted its 2008 Lead NAAQS attainment SIP for the Troy Area on November 9, 2012, which included the base year emissions inventory and the attainment demonstration. EPA proposed to approve the Troy Area attainment SIP for the 2008 Lead NAAQS on September 6, 2013. EPA's analysis of the submitted attainment demonstration included a review of the pollutant addressed, emissions inventory requirements, modeling, RACT and RACM requirements, RFP plan, and contingency measures for the Troy Area. Refer to EPA's September 6, 2013, proposed rulemaking for detailed rationale on EPA's analysis of the Troy area attainment demonstration.

II. What is the action EPA is taking?

EPA is taking final action to approve Alabama's SIP submittal for the Troy Area, as submitted through ADEM to EPA on November 9, 2012, for the purpose of demonstrating attainment of the 2008 Lead NAAQS. Alabama's lead attainment plan for the Troy Area includes a base year emissions inventory, a modeling demonstration of lead attainment, an analysis of RACM/RACT, a RFP plan, and contingency measures.

EPA has determined that Alabama's attainment plan for the 2008 Lead NAAQS for the Troy Area meets the applicable requirements of the CAA. Thus, EPA is taking final action to approve Alabama's attainment plan for the Troy Area. EPA's analysis for this final action is discussed in Section IV of EPA's September 6, 2013, proposed rulemaking.

III. Why is EPA taking this action?

EPA has determined that all the criteria for Alabama's lead attainment plan for the Troy Area have been met. EPA has determined that Alabama's November 9, 2012 SIP submission meets the applicable requirements of the CAA. Specifically, EPA is taking final action to approve Alabama's November 9, 2012 SIP submission, which includes the attainment demonstration, base year emissions inventory, RACM/RACT analysis, contingency measures and RFP plan.

IV. What are EPA's responses to comments for Alabama's November 9, 2012 SIP submission?

As mentioned above, the proposed rule to approve the attainment demonstration for the Troy Area was published on September 6, 2013. *See* 78 FR 58435. EPA received one comment in response to the proposed approval of Alabama's attainment demonstration. The Commenter, Sanders Lead, generally supported EPA's action but also requested that EPA provide a clarification regarding contingency measures.

Comment: The Commenter requests that EPA clarify that ''attainment of the Pb NAAQS is not required until December 31, 2015, and the plan's requirement that Sanders employ certain contingency measures if any Pb NAAQS exceedance occurs after 2013, is not mandated by the Act.'' The Commenter further states that ''while Sanders acknowledges the regulatory preference to adopt contingency measures in the event of an exceedance, employment of contingency measures may not be legally required by the Clean Air Act until December 31, 2015.''

Response: The Commenter is pointing to a provision of the SIP submitted by Alabama that requires Sanders Lead to undertake certain measures in the event that an exceedance of the 2008 Pb NAAQS occurs after July 2013. In the Commenter's view, since the proposed (and final) rule establish that the attainment date for the Area is December 31, 2015, the SIP cannot require Sanders Lead to undertake such contingency measures before that date. It is true that CAA section 172(c)(9) provides that an attainment plan shall include contingency measures if the area fails to attain the NAAQS by the applicable attainment date. However, section 172(c)(9) also provides that an attainment plan shall include contingency measures if an area fails to

[1] *See* 73 FR 66964. *http://www.epa.gov/air/lead/kitrules.html*

[2] Memorandum titled ''2008 Lead (Pb) National Ambient Air Quality Standards (NAAQS) Implementation Questions and Answers'' dated July 8, 2011, from Scott L. Mathias, Interim Director, Air Quality Policy Division.

[3] *http://www.epa.gov/air/lead/kitrules.html.*

make reasonable further progress towards attainment by the attainment date. Moreover, CAA section 116 provides that nothing in the Act precludes the right of a State to adopt or enforce any requirement respecting the control or abatement of air pollution from stationary sources, provided that the requirement is no less stringent than required by the Act. Likewise, section 110(k)(3) provides that EPA shall approve a submittal if it meets all of the applicable requirements of the Act. Finally, CAA section 192(a) of the Act provides that the primary Pb NAAQS shall be attained as expeditiously as practicable.

The aforementioned multiple CAA statutory provisions evidence Congressional intent to achieve the health benefits of NAAQS attainment as expeditiously as practicable, and to approve and enforce State strategies that will achieve that goal. Therefore, EPA believes it is entirely appropriate and consistent with the Act to approve the portion of Alabama's SIP submittal which requires certain measures to be undertaken by Sanders Lead in the event an exceedance of the Lead NAAQS occurs after July 2013. Even assuming it is true that Alabama was not required to submit this provision as part of its attainment SIP, Alabama certainly was authorized to elect to submit the requirement, and EPA has no basis under the CAA to disapprove it.

V. Final Action

EPA is taking final action to approve Alabama's lead attainment plan for the Troy Area. EPA has determined that the SIP meets the applicable requirements of the CAA. Specifically, EPA is taking final action to approve Alabama's November 9, 2012, SIP submission, which includes the attainment demonstration, base year emissions inventory, RACM/RACT analysis, contingency measures and RFP plan.

VI. Statutory and Executive Order Reviews

Under the CAA, the Administrator is required to approve a SIP submittal that complies with the provisions of the Act and applicable Federal regulations. 42 U.S.C. 7410(k); 40 CFR 52.02(a). Thus, in reviewing SIP submissions, EPA's role is to approve state choices, provided that they meet the criteria of the CAA. Accordingly, this action merely approves state law as meeting Federal requirements and does not impose additional requirements beyond those imposed by state law. For that reason, this action:

- Is not a ''significant regulatory action'' subject to review by the Office of Management and Budget under Executive Order 12866 (58 FR 51735, October 4, 1993);
- does not impose an information collection burden under the provisions of the Paperwork Reduction Act (44 U.S.C. 3501 *et seq.*);
- is certified as not having a significant economic impact on a substantial number of small entities under the Regulatory Flexibility Act (5 U.S.C. 601 *et seq.*);
- does not contain any unfunded mandate or significantly or uniquely affect small governments, as described in the Unfunded Mandates Reform Act of 1995 (Pub. L. 104–4);
- does not have Federalism implications as specified in Executive Order 13132 (64 FR 43255, October 7, 1999);
- is not an economically significant regulatory action based on health or safety risks subject to Executive Order 13045 (62 FR 19885, April 23, 1997);
- is not a significant regulatory action subject to Executive Order 13211 (66 FR 28355, May 22, 2001);
- is not subject to requirements of Section 12(d) of the National Technology Transfer and Advancement Act of 1995 (15 U.S.C. 272 note) because application of those requirements would be inconsistent with the CAA; and
- does not provide EPA with the discretionary authority to address, as appropriate, disproportionate human health or environmental effects, using practicable and legally permissible methods, under Executive Order 12898 (59 FR 7629, February 16, 1994).

In addition, this rule does not have tribal implications as specified by Executive Order 13175 (65 FR 67249, November 9, 2000), because the SIP is not approved to apply in Indian country located in the State, and EPA notes that it will not impose substantial direct costs on tribal governments or preempt tribal law.

List of Subjects in 40 CFR Part 52

Environmental protection, Air pollution control, Incorporation by reference, Intergovernmental relations, Lead, Reporting and recordkeeping requirements.

Authority: 42 U.S.C. 7401 *et seq.*

Dated: December 18, 2013.

Beverly H. Banister,

Acting Regional Administrator, Region 4.

40 CFR Part 52 is amended as follows:

PART 52—APPROVAL AND PROMULGATION OF IMPLEMENTATION PLANS

■ 1. The authority citation for part 52 continues to read as follows:

Authority: 42 U.S.C. 7401 *et seq.*

Subpart B—Alabama

■ 2. Section 52.50(e) is amended by adding a new entry for ''2008 Lead Attainment Demonstration for Troy Area'' at the end of the table to read as follows:

§ 52.50 Identification of plan.

* * * * *

(e) * * *

EPA-APPROVED ALABAMA NON-REGULATORY PROVISIONS

Name of nonregulatory SIP provision	Applicable geographic or nonattainment area	State submittal date/ effective date	EPA approval date	Explanation
*	*	*	*	*
2008 Lead Attainment Demonstration for Troy Area.	Troy Area	11/9/12	1/28/14 [Insert citation of publication]	

[FR Doc. 2014–01500 Filed 1–27–14; 8:45 am]

BILLING CODE 6560–50–P

Proposed Rules

Federal Register
Vol. 79, No. 18
Tuesday, January 28, 2014

This section of the FEDERAL REGISTER contains notices to the public of the proposed issuance of rules and regulations. The purpose of these notices is to give interested persons an opportunity to participate in the rule making prior to the adoption of the final rules.

DEPARTMENT OF AGRICULTURE

Animal and Plant Health Inspection Service

7 CFR Part 319

[Docket No. APHIS–2013–0045]

RIN 0579–AD82

Importation of Fresh Bananas From the Philippines Into Hawaii and U.S. Territories

AGENCY: Animal and Plant Health Inspection Service, USDA.

ACTION: Proposed rule.

SUMMARY: We are proposing to amend the regulations concerning the importation of fruits and vegetables to allow the importation of fresh bananas from the Philippines into Guam, Hawaii, and the Northern Mariana Islands. As a condition of entry, the bananas would have to be produced in accordance with a systems approach that would include requirements for importation of commercial consignments, monitoring of fruit flies to establish low-prevalence places of production, harvesting only of hard green bananas, and inspection for quarantine pests by the national plant protection organization of the Philippines. The bananas would also have to be accompanied by a phytosanitary certificate with an additional declaration stating that they were grown, packed, inspected, and found to be free of quarantine pests in accordance with the proposed requirements. This action would allow the importation of bananas from the Philippines while continuing to protect against the introduction of plant pests into Guam, Hawaii, and the Northern Mariana Islands.

DATES: We will consider all comments that we receive on or before March 31, 2014.

ADDRESSES: You may submit comments by either of the following methods:

- *Federal eRulemaking Portal:* Go to *http://www.regulations.gov/#!documentDetail;D=APHIS-2013-0045-0001.*
- *Postal Mail/Commercial Delivery:* Send your comment to Docket No. APHIS–2013–0045, Regulatory Analysis and Development, PPD, APHIS, Station 3A–03.8, 4700 River Road Unit 118, Riverdale, MD 20737–1238.

Supporting documents and any comments we receive on this docket may be viewed at *http://www.regulations.gov/#!docketDetail;D=APHIS-2013-0045* or in our reading room, which is located in Room 1141 of the USDA South Building, 14th Street and Independence Avenue SW., Washington, DC. Normal reading room hours are 8 a.m. to 4:30 p.m., Monday through Friday, except holidays. To be sure someone is there to help you, please call (202) 799–7039 before coming.

FOR FURTHER INFORMATION CONTACT: Ms. Meredith Jones, Senior Regulatory Coordination Specialist, RPM, RCC, PPQ, APHIS, 4700 River Road Unit 133, Riverdale, MD 20737–1231; (301) 851–2289.

SUPPLEMENTARY INFORMATION:

Background

The regulations in ''Subpart–Fruits and Vegetables'' (7 CFR 319.56–1 through 319.56–64, referred to below as the regulations) prohibit or restrict the importation of fruits and vegetables into the United States from certain parts of the world to prevent the introduction and dissemination of plant pests that are new to or not widely distributed within the United States.

The national plant protection organization (NPPO) of the Philippines has requested that the Animal and Plant Health Inspection Service (APHIS) amend the regulations to allow bananas from the Philippines to be imported into Guam, Hawaii, and the Northern Mariana Islands. Currently, bananas may be imported from the Philippines into the continental United States as a result of a rule published in the **Federal Register** and effective on February 7, 2013 (78 FR 8957–8960, Docket No. APHIS–2011–0028). The rule allows the importation of bananas from the Philippines into the continental United States under a systems approach described in the regulations under § 319.56–58.

As part of our evaluation of the Philippines' request, we prepared a pest risk assessment (PRA), titled ''Importation of Banana, *Musa* spp., as Fresh, Hard Green Fruit From the Philippines to Guam, Hawaii, and the Northern Mariana Islands'' (January 29, 2013). The PRA evaluates the risks associated with the importation of green bananas from the Philippines into Guam, Hawaii, and the Northern Mariana Islands from the Philippines.

The PRA identified 62 pests of quarantine significance present in the Philippines that could be introduced into Guam, Hawaii and the Northern Mariana Islands through the importation of green bananas: 2 mites (*Brevipalpus* spp.), 5 beetles, 5 flies (3 *Bactrocera* spp. fruit flies, 1 house fly, and 1 black fly), 35 scales, 4 moths, 4 grasshoppers, 3 thrips, 1 snail, 1 weed, and 2 bacteria. For a full list of the pests, please see the PRA.

Based on the information contained in the PRA, APHIS has determined that measures beyond standard port-of-entry inspection are required to mitigate the risks posed by the quarantine pests with bananas from the Philippines. To recommend specific measures to mitigate those risks, we prepared a risk management document (RMD). Copies of the PRA and RMD may be obtained from the person listed under **FOR FURTHER INFORMATION CONTACT** or viewed on the Regulations.gov Web site (See **ADDRESSES** above for instructions for accessing Regulations.gov).

Based on the recommendations of the RMD, we are proposing to allow the importation of bananas from the Philippines into Guam, Hawaii, and the Northern Mariana Islands only if they are produced in accordance with a systems approach. The systems approach we are proposing would require:

- Registration, monitoring, and oversight of places of production;
- Trapping for *Bactrocera* spp. fruit flies to establish low-prevalence places of production;
- Covering bananas with pesticide bags during the growing season;
- Harvesting only of hard green bananas;
- Requirements for culling, safeguarding, and identifying the fruit; and
- Inspection by the NPPO of the Philippines for quarantine pests.

Bananas from the Philippines would also be required to be accompanied by

a phytosanitary certificate with an additional declaration stating that the bananas were grown, packed, and inspected in accordance with the proposed requirements.

The proposed systems approach to pest mitigation for the importation of bananas from the Philippines into Guam, Hawaii, and the Northern Mariana Islands has been used successfully to mitigate the risks associated with the importation of bananas from the Philippines into the continental United States (§ 319.56–58). The RMD for bananas from the Philippines evaluated the effectiveness of these measures against quarantine pests identified in the PRA and concluded that the provisions in § 319.56–58, along with the general requirements for the importation of fruits and vegetables in the regulations, will be sufficient to prevent the introduction of those pests into Guam, Hawaii, and the Northern Mariana Islands. Therefore, we are proposing to amend § 319.56–58 to allow the importation of bananas from the Philippines into the United States that would include the continental United States, Guam, Hawaii, and the Northern Mariana Islands. The mitigation measures in the systems approach are outlined in greater detail below.

The introductory text of § 319.56–58 currently lists the 12 quarantine pests of concern associated with the importation of bananas from the Philippines into the continental United States. As noted above, the number of quarantine pests of concern associated with the importation of those bananas into Guam, Hawaii, and the Northern Mariana Islands is 62. Given that large number, we are proposing to no longer list the pests of concern in the introductory text of the section and would instead list the pests in the operational workplan described below.

General Requirements

The importation of bananas from the Philippines into Guam, Hawaii, and the Northern Mariana Islands would be allowed under an operational workplan. A operational workplan is an agreement between APHIS' Plant Protection and Quarantine (PPQ) program, officials of the NPPO of a foreign government, and, when necessary, foreign commercial entities that specifies in detail the phytosanitary measures that will comply with our regulations governing the import or export of a specific commodity. Operational workplans apply only to the signatory parties and establish detailed procedures and guidance for the day-to-day operations of specific export programs. Operational workplans also establish how specific phytosanitary issues are dealt within the exporting country and make clear who is responsible for dealing with those issues.

Paragraph (a)(1) of § 319.56–58 requires the NPPO of the Philippines to provide an operational workplan to APHIS that details activities that the NPPO of the Philippines will, subject to APHIS' approval of the workplan, carry out to meet the requirements of the regulations. The bananas would have to be grown at places of production that are registered with the NPPO of the Philippines and that meet the requirements for places of production. Paragraph (a)(2) requires bananas to be grown at places of production that are registered with the NPPO of the Philippines and that meet the proposed requirements for places of production that are discussed later in this document. It also requires that each registered place of production renew its registration annually.

Paragraph (a)(3) requires the bananas to be packed for export to the United States in packinghouses that meet the packinghouse requirements that are described later in this document.

The bananas must be imported in commercial consignments only. Commercial consignments, as defined in § 319.56–2, are consignments that an inspector identifies as having been imported for sale and distribution. Such identification is based on a variety of indicators, including, but not limited to: Quantity of produce, type of packaging, identification of grower or packinghouse on the packaging, and documents consigning the fruits or vegetables to a wholesaler or retailer. Produce grown commercially is less likely to be infested with plant pests than noncommercial consignments. Noncommercial consignments are more prone to infestations because the commodity is often ripe to overripe and is often grown with little or no pest control.

As such, paragraph (a)(4) requires the bananas to be imported in commercial consignments only. That provision would apply to bananas from the Philippines to be imported into Guam, Hawaii, and the Northern Mariana Islands as well as the continental United States.

Monitoring and Oversight

The systems approach includes monitoring and oversight requirements, located in paragraph (b) of § 319.56–58, to ensure that the required phytosanitary measures are properly implemented through the process of growing and packing of bananas for export to the United States.

Paragraph (b)(1) requires the NPPO of the Philippines to visit and inspect registered places of production monthly, starting at least 3 months before harvest and continuing until the end of the shipping season, to verify that the growers are complying with the requirements and follow pest control guidelines, when necessary, to reduce quarantine pest populations. The NPPO of the Philippines must verify that the growers are complying with the fruit fly trapping requirements and would have to certify that each place of production has effective fruit fly trapping programs. Any personnel conducting trapping would have to be trained and supervised by the NPPO of the Philippines. APHIS would monitor the places of production by conducting random and scheduled inspections.

Under paragraph (b)(2), if the NPPO of the Philippines finds that a place of production or packinghouse is not complying with the regulations, no fruit from the place of production or packinghouse is eligible for export to the United States until APHIS and the NPPO of the Philippines conduct an investigation and appropriate remedial actions have been implemented.

Paragraph (b)(3) requires the NPPO of the Philippines to retain all forms and documents related to export program activities in groves and packinghouses for at least 1 year and, as requested, provide them to APHIS for review. Such forms and documents include, but are not limited to, fruit fly trapping and inspection records.

Fruit Fly Trapping To Establish Places of Production With Low Prevalence

Paragraph (c) of § 319.56–58 provides for the use of trapping to demonstrate that registered places of production have a low prevalence of the *Bactrocera* spp. fruit flies. Although the PRA has determined that the three *Bactrocera* spp. are potential pests of bananas from the Philippines, bananas are known to be poor hosts to most species of fruit flies. However, *B. musae* is recorded as attacking green bananas. Trapping to demonstrate an area of low pest prevalence would therefore be an appropriate mitigation for fruit flies.

Beginning at least 3 months before harvest begins and continuing through the end of the harvest, trapping would have to be conducted in registered places of production with at least 1 trap per 0.2 square kilometers to demonstrate that the places of production have a low prevalence of the *Bactrocera* spp. fruit flies. APHIS-approved traps baited with APHIS-approved plugs would have to be used and serviced at least once every 2 weeks.

During the trapping, when traps are serviced, if the *Bactrocera* spp. fruit flies are trapped at a registered place of production at cumulative levels above 2 flies per trap per day, pesticide bait treatments must be applied in the affected place of production in order for the place of production to remain eligible to export bananas to the United States. The NPPO of the Philippines must keep records of fruit fly detections for each trap, update the records each time the traps are checked, and make the records available to APHIS inspectors upon request.

Although the *Bactrocera* spp. fruit flies have been identified as pests of banana in the Philippines, we do not want to impose trapping requirements if they are not justified by the presence of fruit fly larvae in Philippine bananas; as noted earlier, bananas are poor hosts of fruit flies in general, especially when harvested green. Under the heading ''NPPO of the Philippines Inspection'' later in this document, we describe requirements for cutting bananas to inspect for internal feeders such as fruit fly larvae. Currently, paragraph (c) provides that the fruit fly trapping requirements would no longer apply if, by February 9, 2015, no fruit fly larvae are found during such inspections, inspections are no longer required. We are proposing to provide that the fruit fly trapping requirements described in proposed paragraph (c) would no longer apply if, after 2 years from the effective date of a final rule following this proposed rule, such inspections do not find any larvae of the *Bactrocera* spp. fruit flies. Extending the date will provide APHIS with additional fruit fly trapping data, which are especially important given the vulnerability of Guam, Hawaii, and the Northern Mariana Islands to fruit fly introductions.

The date on which trapping would no longer be required would be included in the regulations. If no fruit fly larvae are found, we would publish a notice in the **Federal Register** to confirm that fruit fly trapping would no longer be required. If fruit fly larvae are found, we would amend the regulations to address the demonstrated risk.

Bagging Requirements

Each place of production must follow a pest management program specified by the NPPO of the Philippines to reduce populations of quarantine pests. This includes applying pesticides to reduce pest populations and bagging bananas after flower drop with plastic bags impregnated with pesticides.

As such, paragraph (d) provides that plastic bags impregnated with pesticides must cover the bananas during the growing period. If a pesticide bag falls off or is torn so that fruit flies can enter, that fruit would no longer be eligible for export to the United States. This growing requirement would prevent quarantine pests from attacking the bananas.

Harvesting Requirements

Paragraph (e) of § 319.56–58 sets out requirements for harvesting bananas. Under paragraph (e)(1), bananas would have to be harvested at a hard green stage.

Harvesting bananas at a hard green stage (i.e., bananas with no yellow or green color break) is a standard industry practice for banana production in Central and South America, the Philippines, Hawaii, and most of the world because ripe bananas are more likely to be infested by fruit flies. Inspectors at the port of entry would need to determine that:

- Bananas shipped by air are still green upon arrival in the United States;
- Bananas shipped by sea are either green upon arrival in the United States or yellow but firm.

Under paragraph (e)(2), harvested bananas are required to be placed in field cartons or containers that are marked with the official registration number of the place of production. The fruit would have to be safeguarded from exposure to fruit flies from harvest to export, including being packaged so as to prevent access by fruit flies and other injurious insect pests. These requirements ensure that APHIS and the NPPO of the Philippines can identify the place of production where the bananas were produced if inspectors find quarantine pests in the fruit either before export or at the port of entry. Places of production with quarantine pests would be removed from the program.

Post-Harvesting Processing

As such, paragraph (f) of § 319.56–58 provides that all damaged fruit would have to be culled at the packinghouse. Fruit with broken or bruised skin is more susceptible to infestation by pests than undamaged fruit. In addition, the fruit would have to be washed with a high pressure water spray and with soap and water. This requirement would remove mites, mealy bugs, scale insects, and other surface-feeding quarantine pests from the fruit prior to export.

Packinghouse Requirements

The RMD suggests that the packinghouses prevent the entry of pests with double-door entry and other measures designed to exclude fruit flies and other pests of quarantine concern. The packinghouse operations for export of bananas must be monitored by the NPPO of the Philippines. No other fruit is allowed in a packinghouse during the time export fruit is being packed.

Such requirements are contained in paragraph (g) of § 319.56–58. Specifically, paragraph (g)(1) provides that the packinghouse would have to have double doors at the entrance to the facility and at the interior entrance to the area where the bananas are packed to exclude fruit flies and other pests of quarantine concern. Paragraph (g)(2) requires that bananas for export be packed into new, clean boxes, crates, or other packing material. Paragraph (g)(2) also requires that bananas intended for export to the United States be labeled with the name and location of the packinghouse marked on the boxes, and segregated from bananas intended for other markets. These requirements would ensure that APHIS and the NPPO of the Philippines could identify the packinghouse at which the fruit was packed if inspectors find quarantine pests in the fruit either before export or at the port of entry.

Paragraph (g)(3) requires that shipping documents accompanying consignments of bananas from the Philippines that are exported to the United States include the official registration number of the place of production at which the bananas were grown and must identify the packinghouse in which the fruit was processed and packed. This identification must be maintained until the fruit is released for entry into the United States.

Paragraph (g)(4) requires that the packinghouse operations for export of bananas be monitored by the NPPO of the Philippines. This requirement would ensure that the packinghouses remain compliant with the regulations.

NPPO of the Philippines Inspection

To ensure that the mitigations required in the systems approach are effective at producing fruit free of the targeted quarantine pests, we would require the NPPO of the Philippines to inspect the fruit after harvest. Paragraph (h)(1) of § 319.56–58 requires inspectors from the NPPO of the Philippines to certify that bananas were harvested at the hard green stage.

Under paragraph (h)(2), the NPPO of the Philippines is required to inspect a biometric sample of the fruit from each place of production at a rate to be determined by APHIS. The inspectors must visually inspect fruit from each place of production for all the quarantine pests. (The paragraph currently states that the inspectors must

visually inspect for quarantine pests listed in the introductory text of the section; we would amend the text to refer to the quarantine pests listed in the operational workplan to conform with the proposed change described above.) The inspectors must also cut fruit to inspect for quarantine pests that are internal feeders, which include larvae of the three *Bactrocera* fruit fly species (*B. musae, B. occipitalis,* and *B. philippinensis*). We have determined that inspection can serve as an effective mitigation for the risk associated with these pests in bananas exported from the Philippines.

If any *Bactrocera* spp. fruit flies are detected in this inspection, the place of production where the infested bananas were grown will immediately be suspended from the export program until an investigation has been conducted by APHIS and the NPPO of the Philippines and appropriate mitigations have been implemented. If other quarantine pests are detected in this inspection, the consignment will be ineligible for exportation to the United States.

Phytosanitary Certificate

To certify that the bananas from the Philippines have been grown and packed in accordance with the requirements of § 319.56–58, paragraph (i) requires each consignment of bananas imported from the Philippines into the United States to be accompanied by a phytosanitary certificate issued by the NPPO of the Philippines with an additional declaration stating that the bananas in the consignment were grown, packed, and inspected in accordance with the systems approach in § 319.56–58.

Executive Order 12866 and Regulatory Flexibility Act

This proposed rule has been reviewed under Executive Order 12866. The proposed rule has been determined to be not significant for the purposes of Executive Order 12866 and, therefore, has not been reviewed by the Office of Management and Budget.

In accordance with 5 U.S.C. 603, we have performed an initial regulatory flexibility analysis, which is summarized below, regarding the economic effects of this proposed rule on small entities. Copies of the full analysis are available by contacting the person listed under **FOR FURTHER INFORMATION CONTACT** or on the Regulations.gov Web site (see **ADDRESSES** above for instructions for accessing Regulations.gov).

Based on the information we have, there is no reason to conclude that adoption of this proposed rule would result in any significant economic effect on a substantial number of small entities. However, we do not currently have all of the data necessary for a comprehensive analysis of the effects of this proposed rule on small entities. Therefore, we are inviting comments on potential effects. In particular, we are interested in determining the number and kind of small entities that may incur benefits or costs from the implementation of this proposed rule.

Currently, about 4.1 million metric tons (MT) of bananas are imported into the United States every year. In 2011, Hawaii's banana harvest totaled about 7,900 MT compared to U.S. imports of about 4.1 million MT. We do not have information at this point on the quantity of bananas that the Philippines expects to ship to the State of Hawaii or to U.S. territories, or the quantity of bananas already imported into these destinations. We note that for a recent rulemaking to allow banana imports from the Philippines into the continental United States, that the quantity was expected to be relatively insignificant, equivalent to about 0.05 percent of U.S. imports from other countries, 4.1 million MT. Consumers in Hawaii and U.S. territories would benefit from the additional source of fresh bananas. APHIS does not expect the proposed rule to have a significant economic impact on small entities.

Executive Order 12988

This proposed rule would allow bananas to be imported into Guam, Hawaii, and the Northern Mariana Islands from the Philippines. If this proposed rule is adopted, State and local laws and regulations regarding bananas imported under this rule would be preempted while the fruit is in foreign commerce. Fresh fruits are generally imported for immediate distribution and sale to the consuming public and would remain in foreign commerce until sold to the ultimate consumer. The question of when foreign commerce ceases in other cases must be addressed on a case-by-case basis. If this proposed rule is adopted, no retroactive effect will be given to this rule, and this rule will not require administrative proceedings before parties may file suit in court challenging this rule.

National Environmental Policy Act

We made an environmental assessment that reviewed and analyzed the potential impacts of importation of bananas from the Philippines into the continental United States available with our proposal to allow that importation, which was published in the **Federal Register** on May 30, 2012 (77 FR 31829–31830, Docket No. APHIS–2011–0028). The environmental assessment was prepared in accordance with: (1) The National Environmental Policy Act of 1969 (NEPA), as amended (42 U.S.C. 4321 *et seq.*), (2) regulations of the Council on Environmental Quality for implementing the procedural provisions of NEPA (40 CFR parts 1500–1508), (3) USDA regulations implementing NEPA (7 CFR part 1b), and (4) APHIS' NEPA Implementing Procedures (7 CFR part 372). Subsequently, we published a finding of no significant impact along with the February 2013 final rule mentioned earlier in this document.

We have reviewed the potential environmental impacts of allowing the importation of bananas from the Philippines into Guam, Hawaii, and the Northern Mariana Islands and found that they are the same as those described in the earlier environmental assessment; therefore, we are extending our finding of no significant impact to include this action as well.

Paperwork Reduction Act

In accordance with section 3507(d) of the Paperwork Reduction Act of 1995 (44 U.S.C. 3501 *et seq.*), the information collection or recordkeeping requirements included in this proposed rule have been submitted for approval to the Office of Management and Budget (OMB). Please send written comments to the Office of Information and Regulatory Affairs, OMB, Attention: Desk Officer for APHIS, Washington, DC 20503. Please state that your comments refer to Docket No. APHIS–2013–0045. Please send a copy of your comments to: (1) Docket No. APHIS–2013–0045, Regulatory Analysis and Development, PPD, APHIS, Station 3A–03.8, 4700 River Road Unit 118, Riverdale, MD 20737–1238, and (2) Clearance Officer, OCIO, USDA, Room 404–W, 14th Street and Independence Avenue SW., Washington, DC 20250. A comment to OMB is best assured of having its full effect if OMB receives it within 30 days of publication of this proposed rule.

Allowing the importation of fresh bananas from the Philippines into Guam, Hawaii, and the Northern Mariana Islands will require the completion of the following information: A bilateral workplan, registration of production sites, monitoring and oversight of production sites, maintenance of records, forms, and documents, marking of production sites with registration numbers, identification of packinghouses name location, and a phytosanitary certificate.

We are soliciting comments from the public (as well as affected agencies)

concerning our proposed information collection and recordkeeping requirements. These comments will help us:

(1) Evaluate whether the proposed information collection is necessary for the proper performance of our agency s functions, including whether the information will have practical utility;

(2) Evaluate the accuracy of our estimate of the burden of the proposed information collection, including the validity of the methodology and assumptions used;

(3) Enhance the quality, utility, and clarity of the information to be collected; and

(4) Minimize the burden of the information collection on those who are to respond (such as through the use of appropriate automated, electronic, mechanical, or other technological collection techniques or other forms of information technology; e.g., permitting electronic submission of responses).

Estimate of burden: Public reporting burden for this collection of information is estimated to average 0.78 hours per response.

Respondents: Foreign government, importers and growers of bananas from the Philippines.

Estimated annual number of respondents: 46.

Estimated annual number of responses per respondent: 5.34.

Estimated annual number of responses: 246.

Estimated total annual burden on respondents: 192 hours. (Due to averaging, the total annual burden hours may not equal the product of the annual number of responses multiplied by the reporting burden per response.)

Copies of this information collection can be obtained from Mrs. Celeste Sickles, APHIS' Information Collection Coordinator, at (301) 851–2908.

E-Government Act Compliance

The Animal and Plant Health Inspection Service is committed to compliance with the E-Government Act to promote the use of the Internet and other information technologies, to provide increased opportunities for citizen access to Government information and services, and for other purposes. For information pertinent to E-Government Act compliance related to this proposed rule, please contact Mrs. Celeste Sickles, APHIS' Information Collection Coordinator, at (301) 851–2908.

List of Subjects in 7 CFR Part 319

Coffee, Cotton, Fruits, Imports, Logs, Nursery stock, Plant diseases and pests, Quarantine, Reporting and recordkeeping requirements, Rice, Vegetables.

Accordingly, we propose to amend 7 CFR part 319 as follows:

PART 319—FOREIGN QUARANTINE NOTICES

■ 1. The authority citation for part 319 continues to read as follows:

Authority: 7 U.S.C. 450, 7701–7772, and 7781–7786; 21 U.S.C. 136 and 136a; 7 CFR 2.22, 2.80, and 371.3.

■ 2. Section 319.56–58 is amended as follows:

■ a. The introductory text is revised;

■ b. In paragraph (c), the date, ''February 9, 2015'' is removed and the date ''[*date 2 years after the effective date of final rule*]'' is added in its place;

■ c. In paragraph (h)(2), in the second sentence, the words ''introductory text of this section'' are removed and the words ''operational workplan required by paragraph (a)(1) of this section'' are added in their place.

The revision reads as follows:

§ 319.56–58 Bananas from the Philippines.

Bananas (*Musa* spp., which include *M. acuminate* cultivars and *M. acuminate* x *M. balbisiana* hybrids) may be imported into the continental United States, Guam, Hawaii, and the Northern Mariana Islands from the Philippines only under the conditions described in this section.

* * * * *

Done in Washington, DC, this 23rd day of January 2014.

Kevin Shea,

Administrator, Animal and Plant Health Inspection Service.

[FR Doc. 2014–01581 Filed 1–27–14; 8:45 am]

BILLING CODE 3410–34–P

FEDERAL HOUSING FINANCE BOARD

12 CFR Parts 914 and 917

FEDERAL HOUSING FINANCE AGENCY

12 CFR Parts 1236 and 1239

DEPARTMENT OF HOUSING AND URBAN DEVELOPMENT

Office of Federal Housing Enterprise Oversight

12 CFR Parts 1710 and 1720

RIN 2590–AA59

Responsibilities of Boards of Directors, Corporate Practices and Corporate Governance Matters

AGENCIES: Federal Housing Finance Board; Federal Housing Finance Agency; Office of Federal Housing Enterprise Oversight.

ACTION: Proposed rule; with request for comments.

SUMMARY: The Federal Housing Finance Agency (FHFA) is proposing to amend its regulations by relocating and consolidating certain Federal Housing Finance Board (Finance Board) and Office of Federal Housing Enterprise Oversight (OFHEO) regulations that pertain to the responsibilities of boards of directors, corporate practices, and corporate governance matters. The OFHEO regulations address corporate governance matters at the Federal National Mortgage Association and the Federal Home Loan Mortgage Corporation (Enterprises), while the Finance Board regulations address the powers and responsibilities of the boards of directors and management of the Federal Home Loan Banks (Banks). The proposed rule would consolidate most of those existing regulations into a new FHFA regulation, parts of which would apply to both the Banks and the Enterprises (together, regulated entities), and parts of which would apply only to the Banks or only to the Enterprises. Most of the content of the new regulation has been derived from the existing regulations, with such modifications as are necessary to apply certain provisions to all regulated entities. The proposal also would include a new provision on risk management and a new definition of ''credit risk,'' which is a term that is used only within the proposed risk management provision. Those provisions would apply to both the Banks and the Enterprises. FHFA also is proposing to amend a definition within

its Prudential Management and Operations Standards (Prudential Standards) regulations and the introductory language to the standards themselves. Together, those amendments would explicitly include certain introductory language—pertaining to the general responsibilities of senior management and boards of directors—as part of the standards. The proposed rule also would repeal a separate provision of the OFHEO regulations that relate to minimum safety and soundness requirements.

DATES: Written comments on the proposed rule must be received on or before March 31, 2014. For additional information, see **SUPPLEMENTARY INFORMATION**.

ADDRESSES: You may submit your comments on the proposed rule, identified by regulatory information number ''RIN 2590–AA59,'' by any of the following methods:

- *Email:* Comments to Alfred M. Pollard, General Counsel, may be sent by email to *RegComments@FHFA.gov.* Please include ''RIN 2590–AA59'' in the subject line of the message.
- *Federal eRulemaking Portal: http://www.regulations.gov.* Follow the instructions for submitting comments. If you submit your comment to the *Federal eRulemaking Portal,* please also send it by email to FHFA at *RegComments@FHFA.gov* to ensure timely receipt by the agency. Include the following information in the subject line of your submission: Comments/RIN 2590–AA59.
- *U.S. Mail, United Parcel Post, Federal Express, or Other Mail Service:* The mailing address for comments is: Alfred M. Pollard, General Counsel, Attention: Comments/RIN 2590–AA59, Federal Housing Finance Agency, Constitution Center, Eighth Floor (OGC), 400 7th Street SW., Washington, DC 20024.
- *Hand Delivered/Courier:* The hand delivery address is: Alfred M. Pollard, General Counsel; Attention: Comments/RIN 2590–AA59, Federal Housing Finance Agency, Constitution Center, Eighth Floor (OGC), 400 7th Street SW., Washington, DC 20024. The package should be logged at the Guard Desk, First Floor, on business days between 9 a.m. and 5 p.m.

FOR FURTHER INFORMATION CONTACT: Amy Bogdon, *Amy.Bogdon@fhfa.gov,* (202) 649–3320, Associate Director, Division of Federal Home Loan Bank Regulation; or Michou Nguyen, *Michou.Nguyen@fhfa.gov,* (202) 649–3081 (not toll-free numbers), Assistant General Counsel, Office of General Counsel, Federal Housing Finance Agency, Constitution Center, Eighth Floor (OGC), 400 7th Street SW., Washington, DC 20024. The telephone number for the Telecommunications Device for the Hearing Impaired is (800) 877–8339.

SUPPLEMENTARY INFORMATION:

I. Comments

FHFA invites comments on all aspects of the proposed rule in addition to requesting comments in response to specific questions that appear throughout this document. FHFA will take all comments into consideration before issuing a final regulation. All comments received will be posted without change on the FHFA Web site at *http://www.fhfa.gov,* and will include any personal information you provide, such as your name, address (mailing and email), and telephone numbers. In addition, copies of all comments received will be available for examination by the public on business days between the hours of 10 a.m. and 3 p.m., at the Federal Housing Finance Agency, Eighth Floor, 400 7th Street SW., Washington, DC 20024. To make an appointment to inspect comments, please call the Office of General Counsel at (202) 649–3804.

II. Background

A. Purpose of the Proposed Rule

This proposed rule is the next phase in FHFA's effort to repeal or relocate all remaining OFHEO and Finance Board regulations. Both of the predecessor agencies had adopted regulations addressing director responsibilities, corporate practices, and corporate governance matters. Pursuant to the Housing and Economic Recovery Act of 2008 (HERA), Public Law 110–289, 122 Stat. 2654, those regulations remain in effect until they are superseded by regulations issued by FHFA. *See id.* at sections 1301, 1302, 1311, 1312, 122 Stat. 2794–95, 2797–98. The intent of this proposed rule is to consolidate or relocate certain of the existing regulations into a new set of FHFA regulations that would address those same matters. FHFA would expand the scope of certain of the existing regulations to both the Enterprises and the Banks. Those provisions address matters of general corporate governance or corporate practices that are common to all the regulated entities. For certain other provisions of the existing regulations, FHFA would continue to apply them only to the Banks or only to the Enterprises, as they address topics that are unique to the particular entity, as permitted by statute. The proposed rule would carry over most of those provisions without change. The proposed rule is not intended to address conservatorship matters. Rather, the proposal addresses matters of corporate practice and governance, as well as compliance and risk management practices, nearly all of which currently apply to the Enterprises through the OFHEO regulations and all of which remain relevant to their safe and sound operation.

The regulations of the predecessor agencies that would be relocated by this rulemaking are located at parts 914, 917, and 1710 of title 12 of the Code of Federal Regulations (CFR). The Finance Board regulations at part 914 address regulatory reporting for the Banks. FHFA is proposing to relocate that provision without substantive change and apply it to all of the regulated entities. All of the relocated regulations would be adopted as a new part, 12 CFR 1239 (part 1239), in the FHFA section of title 12 of the CFR. Any regulations of the predecessor agencies that are not being adopted as FHFA regulations would be repealed.

As part of this rulemaking, FHFA is also proposing to amend one of the definitions within its Prudential Standards regulations, as well as one aspect of the Prudential Standards themselves. Together, those amendments would explicitly provide that the introductory language within the Prudential Standards, which appears immediately before the enumerated 10 standards, is considered a part of the standards and is to be treated in the same manner as the 10 enumerated standards. The introductory section of the Prudential Standards recites general concepts of corporate governance and responsibilities, as they relate to the subject matter of the individual standards, that are a part of the typical responsibilities of the board of directors and senior management of any financial institution. FHFA believes that it would be more appropriate to include those paragraphs as explicitly part of the standards, and having the same substantive effect under the Prudential Standards regime. Lastly, FHFA is proposing to repeal in its entirety part 1720 of the OFHEO regulations, which established certain safety and soundness standards for the Enterprises. Because many of the matters addressed by part 1720 are also addressed by the Prudential Standards and by parts of this proposed rule, FHFA has determined that the repeal of part 1720 will not change the standards applicable to the Enterprises. The following sections briefly describe each of the provisions in proposed part 1239 and its origin.

Also with respect to the Prudential Standards, FHFA acknowledges that there is substantial overlap between some of these proposed regulations and the Prudential Standards, and requests comment on appropriate modifications to the regulations to harmonize them with the Prudential Standards to create a unified set of corporate governance requirements with appropriate levels of specificity and appropriate enforcement mechanisms.

B. Overview of Part 1239

Part 1239 of the proposed rule would be structured into a subpart (A) for definitions and four substantive subparts (B through E). Subpart B would consist of regulations relating to core corporate governance principles, which would apply to both the Banks and the Enterprises. Subpart C would include regulations addressing codes of conduct, risk management, compliance programs, and regulatory reports, which also would apply to all regulated entities. Subparts D and E would consist of regulations that address matters specific to the Banks (such as those relating to a Bank's member product policy) and to the Enterprises (such as those relating to the Enterprise boards), respectively.

Much of the content of part 1239, with the exception of the provision on risk management, has been derived from the current Finance Board and OFHEO regulations, with modifications as necessary to apply certain of the provisions to all regulated entities and to clarify, update, or supplement the existing regulations, as appropriate. FHFA believes that the current Finance Board risk management regulation would benefit from updates. Accordingly, FHFA has rewritten this provision in its entirety and is proposing to apply the revised provision to the Enterprises as well as to the Banks. FHFA believes that the Finance Board regulations dealing with audit committees and internal controls could be similarly updated and extended to the Enterprises, but is soliciting comment on how best to do that, rather than proposing revised language for those provisions, as discussed in more detail in part III.E. (Bank Specific Requirements).

C. Considerations of Differences Between the Banks and the Enterprises

When promulgating regulations or taking other actions that relate to the Banks, section 1313(f) of the Federal Housing Enterprises Financial Safety and Soundness Act of 1992 (Safety and Soundness Act), as amended by section 1201 of HERA, requires the Director to consider the differences between the Banks and the Enterprises with respect to the Banks' cooperative ownership structure; mission of providing liquidity to members; affordable housing and community development mission; capital structure; and joint and several liability. 12 U.S.C. 4513(f). In preparing the proposed rule, the Director has considered the differences between the Banks and the Enterprises as they relate to the above factors and has determined that none of the statutory factors would be adversely affected by the proposed rule. The Director is requesting comments from the public about whether differences related to these factors should result in a revision of the proposed rule as it relates to the Banks.

III. Part 1239

A. Subpart A—General

Definitions (1239.2)

The definitions section of the proposed rule consists of definitions from parts 914, 917, and 1710, most of which are being relocated without any substantive change, apart from conforming changes that are necessary to make certain of the defined terms applicable to both the Banks and the Enterprises. The proposed rule would substantively amend certain of the existing definitions, as described below. First, the proposed rule would replace the term ''reportable conditions'' (which currently appears only in the Finance Board regulation on audit committees) with the term ''significant deficiency.'' That revision would better align the concept with current accounting and financial reporting standards. Second, the proposed rule would amend the definition of ''credit risk,'' which currently appears only in the Finance Board provision pertaining to risk management. The proposed definition would define credit risk as the potential that a borrower or counterparty will fail to meet its financial obligations in accordance with the agreed terms. FHFA believes that is a better definition than the current provision, which focuses on the decline in value of an obligation as a result of a deterioration in creditworthiness. Third, the proposal would revise the definition of ''operational risk'' to follow the definition used by the other federal banking regulators in their risk-based capital regulations, which also is consistent with the definition of the term from the Basel Committee on Banking Supervision.[1] Fourth, the proposed rule would delete the definition of ''senior executive officer'' but add the substance of that definition into the definition of ''executive officer.'' The term ''senior executive officer'' is not used in any of the substantive provisions of the proposed regulations, and appears only within the definition of ''executive officer.'' Rather than retain a definition of a term that appears only within another defined term, FHFA believes it is more appropriate to relocate the operative language from the definition of ''senior executive officer'' into the definition of ''executive officer.'' A number of terms that will no longer be used in the proposed regulations will not be carried forward into the proposed rule, nor will any terms that FHFA has defined in the general definitions section of its regulations, 12 CFR part 1201.

B. Subpart B—Corporate Practices and Procedures Applicable to All Regulated Entities

Subpart B includes three provisions that address certain core principles of corporate practices or governance that FHFA believes should be applied to both the Enterprises and the Banks. The topics addressed by this part of the proposed rule are choice of law, duties of directors, and committees of the boards of directors, and nearly all of those provisions are derived from the Finance Board or OFHEO regulations.

Choice of Law (1239.3)

Section 1239.3 of the proposed rule would require each regulated entity to designate a body of law to follow with respect to its corporate governance and indemnification practices. This requirement already applies to the Enterprises and the Office of Finance, pursuant to 12 CFR 1710.10 of the OFHEO regulations and 12 CFR 1273.7(i)(2) of the FHFA regulations, respectively, but would be new for the Banks. Under this provision, a regulated entity would be required to designate in its bylaws one of the following for its corporate governance practices and procedures: (1) The law of the jurisdiction in which the entity maintains its principal office; (2) the Delaware General Corporation Law; or (3) the Revised Model Business Corporation Act. Technically, those laws would not apply to, nor be binding on, the Banks or Enterprises, because they are not state-chartered corporations. Rather, FHFA intends that the entities would look to their chosen body of law to address any governance or indemnification issues that may arise and for which no federal laws control.

[1] *See* Basel Committee on Banking Supervision, *International Convergence of Capital Measurement and Capital Standards: A Revised Framework—Comprehensive Version,* Section V (Operational Risk), paragraph 644, Basel, June 2006.

The proposed regulation also includes a provision dealing with indemnification, which is derived from FHFA's regulations governing the Office of Finance, 12 CFR 1273.7(i)(3), and from the OFHEO indemnification provisions at 12 CFR 1710.20. The proposed provision would state that a regulated entity shall indemnify its directors, officers, and employees under terms and conditions to be determined by the board, subject to any limitations in federal law or the law of the jurisdiction designated for an entity's corporate governance practices. The proposal further requires each entity to have policies and procedures regarding the indemnification of its directors, officers, and employees, which must address how the board of directors is to decide on requests for indemnification, and must include standards relating to indemnification, investigations by the board of directors, and review by independent counsel. The proposal also authorizes FHFA to review an entity's indemnification policies, procedures, and practices, and carries over a provision of the OFHEO regulation that authorized it to limit or prohibit indemnification payments for reasons of safety and soundness. Under that latter provision, FHFA could limit or prohibit indemnification payments to any person found to have violated any law or regulation, breached any material elements of the entity's bylaws or code of conduct, or engaged in grossly negligent actions.

FHFA is proposing to make these provisions applicable to the Banks because there are benefits to having all regulated entities follow the same regulatory standard with respect to their corporate governance and indemnification practices, and because there currently is no definitive guidance for the Banks on this matter. The indemnification provision explicitly states that it is subject to the other provisions of the regulation, one of which provides that the corporate governance and indemnification practices must comply with the authorizing statutes and any other applicable federal statutes or regulations. That means that a regulated entity's ability to indemnify its directors, officers, and employees will be subject to any limitations that FHFA imposes through its separate indemnification regulations or through this provision, regardless of what the chosen state law may provide.

Duties and Responsibilities of Board Members (1239.4)

Section 1293.4 of the proposed rule would set forth certain basic duties and responsibilities of directors of a regulated entity. This provision states that the ultimate responsibility for managing a regulated entity lies with the board of directors. It also requires directors to, among other things: (1) Act in good faith and with due care, in the best interest of the regulated entity, and in a fair and impartial manner; (2) direct the affairs of an entity in a manner consistent with applicable statutes and regulations; (3) have a working familiarity with basic finance and accounting practices; and (4) adopt bylaws governing the manner in which the regulated entity administers its affairs. Directors must also put in place policies relating to the board's oversight of risk management, compensation, financial reporting, and responsiveness to FHFA supervisory concerns.

The text of the proposed regulation consists mostly of provisions carried over from Finance Board regulation (§ 917.2) and, to a lesser extent, OFHEO regulation (§ 1710.15). The proposed rule would carry over nearly all of the provisions of (§ 917.2) of the Finance Board regulations, and the substance of the existing OFHEO regulations located at 12 CFR 1710.15(b)(3), (5), and (7). Those OFHEO provisions require the boards of directors to have policies in place to assure their oversight of compensation programs, disclosures to shareholders and investors, and responsiveness to regulatory inquiries. The proposed rule would add a provision requiring the boards to have policies in place to assure their oversight of risk management, in light of the importance of risk management policies and controls to the safe and sound operation of the entities. FHFA is proposing not to carry over certain other OFHEO regulations that require the boards to have in place policies to assure their oversight of corporate strategy, hiring and retention of qualified senior executive officers, integrity of financial reporting, and extensions of credit to board members. *See* 12 CFR 1710.15(b)(1)–(2), (4), and (6). FHFA believes that these topics are covered adequately elsewhere. The proposed rule also would repeal 1710.15(a) and (c), which state the purpose of those OFHEO regulations and direct Enterprise board members to their chosen body of corporate law, as well as to OFHEO pronouncements, for additional guidance on these topics. FHFA believes that these matters need not be explicitly stated in the regulation.

Board Committees (1239.5)

The last section in subpart B deals with committees of the board of directors, and is derived principally from § 1710.12 of the OFHEO regulations. The proposed regulation would require each regulated entity to have certain specified committees of the board of directors and would authorize the entities to establish any other committees they deem appropriate. Each entity would be required to have committees of the board of directors that are responsible for each of the following matters: (1) Risk management; (2) audit; (3) compensation; and (4) corporate governance. The rule would not require the entities to establish committees with those specific names, only that they establish committees that are responsible for overseeing those matters. The proposed rule also would provide that the risk management committee and the audit committee cannot be combined with any of the other committees. The proposal would further require that each committee have a formal written charter and that it meet with sufficient frequency to carry out its responsibilities. The regulation retains, for the Enterprises only, an OFHEO provision requiring Enterprise audit committees to comply with certain provisions of section 301 of the Sarbanes-Oxley Act (SOA), which relates to audit committees of public companies, and that the audit committee and other Enterprise committees also comply with applicable provisions of the rules of the New York Stock Exchange (NYSE). That is the only provision in this proposed regulation that would not apply to the Banks. Because the Federal Home Loan Bank Act (Bank Act) mandates that a majority of a Bank's board of directors be officers or directors of the Bank's members, these directors may not meet the independence criteria in both of the relevant SOA and NYSE provisions for audit committee members. Indeed, nine of the Banks have disclosed in their federal securities law filings that the member directors who serve on the Banks' audit committees did not meet the NYSE independence requirement because the member had a ''material relationship'' with the Bank or failed the NYSE's revenue test.[2]

[2] Under NYSE rules, an employee of a Bank member would not be considered independent for purposes of serving on the audit committee if: (1) The member has made interest payments to the Bank exceeding the greater of $1 million or 2 percent of the Bank's gross annual revenue in any of the past three fiscal years; or (2) if the Bank has purchased loans from the member in an amount exceeding the greater of $1 million or 2 percent of the member's gross annual revenue in any of the past three fiscal years. In addition, an officer of a Bank member is not considered independent if the member has a ''material relationship'' with the Bank. The rules list a banking relationship as an example of a type of relationship that can constitute

Continued

The substance of the proposed rule differs slightly from OFHEO regulation § 1710.12 in that it requires each board to have a committee dealing with risk management. The OFHEO rule mandates that the Enterprises have the other three committees mentioned above. There is no equivalent Finance Board regulation. FHFA believes that, consistent with current best practices, it is appropriate to add the risk management committee to the list of required committees and to make this regulation applicable to the Banks as these four areas are crucial to the safe and sound operation of all regulated entities.

FHFA also has considered whether the proposed rule should require the board of directors of each regulated entity to have an executive committee, in addition to the other four committees that would be required by the proposed rule. FHFA requests comments on whether it would be appropriate for the regulations to require the establishment of executive committees as a matter of course and, if so, what powers should be delegated to those committees. An executive committee that is authorized to exercise the powers of the full board of directors could enhance the efficiency of the board's operations, particularly at Banks that have large boards of directors. FHFA also requests comment on whether the need for an executive committee, or the benefits from having such a committee, would be any greater in the case of a Bank that results from the merger of two other Banks. In such cases, statutory provisions that cause the resulting Bank to have a very large board of directors also may make board operations more cumbersome and thus less efficient. To the extent that an executive committee may address matters that otherwise would have been addressed by the full board, FHFA requests comments on what limitations might be appropriate to ensure that the ability of those directors who are not on the executive committee to exercise their own fiduciary duties is not compromised.

C. Subpart C—Other Requirements Applicable to All Regulated Entities

Subpart C includes four provisions that relate to certain other matters that FHFA believes should apply to all of the regulated entities, but are not the type of governance provisions that are included in Subpart B. These provisions address: (1) Code of conduct; (2) risk management; (3) compliance programs; and (4) regulatory reports. The substance of these provisions is derived from parts 914, 917, and 1710 of the Finance Board and OFHEO regulations, respectively, except for the risk management provision, which has been rewritten in its entirety to better align it with supervisory expectations for sound risk management.

Code of Conduct (1239.10)

The first regulation in Subpart C requires each regulated entity to establish a written code of conduct for directors, executive officers, and employees that is designed to ensure that they discharge their duties in an objective and impartial manner. The code of conduct must include standards set forth in section 406 of the SOA, which address promoting: (1) Honest and ethical conduct, including the handling of conflicts of interest between personal and professional relationships; (2) full, fair, accurate, timely, and understandable disclosures in periodic reports filed with the Securities and Exchange Commission (SEC); and (3) compliance with applicable rules and regulations. In addition, each regulated entity must review the code at least once every three years and make any necessary revisions. The requirements of proposed § 1239.10 are being relocated from OFHEO regulation § 1710.14 without any substantive changes, and are being made applicable to the Banks as well as the Enterprises. FHFA believes that a code of conduct is an important tool to ensure the safe and sound operation of a regulated entity and therefore is proposing to extend the requirements of this provision to the Banks.

Risk Management (1239.11)

Both the Finance Board and OFHEO regulations include provisions dealing with the issue of risk management responsibilities of the boards of directors. *See* 12 CFR 917.3 and § 1710.19(b). In reviewing both of those provisions, FHFA determined that they may no longer reflect the current best risk management practices and concepts. Based in part on more recent proposals of the Federal Reserve Board,[3] FHFA is proposing to adopt a new risk management regulation for all of the regulated entities, which would supplant the existing Finance Board and OFHEO regulations. The proposed risk management provision would require a regulated entity to adopt an enterprise-wide risk management program that aligns the entity's overall risk profile with its strategic plan and mission objectives. The regulation also would require that the risk management program address the regulated entity's risk profile and risk exposure. The program also would have to include appropriate risk limitations, risk management practices, and compliance monitoring provisions, while specifying management's authority and independence to carry out its risk management responsibilities.

The proposed rule would require each regulated entity to have a risk committee and that it be established pursuant to a written charter approved by the full board of directors. The risk committee also would have to be chaired by a director that does not serve in a management capacity. That provision would effectively apply only to the Enterprises because the boards of the Banks do not have any management representatives. The committee must have at least one member with risk management expertise and all members must have an understanding of risk management principles and experience developing and applying risk management practices, identifying risks, and monitoring risk controls for financial services organizations. The proposal would require the committee to meet regularly and report directly to the board of directors, and would provide that the committee is responsible for documenting and overseeing the risk management policies and practices, reviewing and approving the risk management program, and reviewing regular reports from the chief risk officer (CRO).

The proposed rule would require each regulated entity to appoint a CRO, who would be responsible for the risk management function. The proposed

a material relationship. The board of directors of the Bank is responsible for determining whether a relationship is ''material'' after ''broadly'' considering all relevant facts and circumstances. *See* NYSE Listed Company Manual Sect. 303A.02 and 303A.07(a).

Under SOA section 301, an audit committee director is not considered independent if the director is an ''affiliated person'' of the Bank. The Securities Exchange Act of 1934 defines ''affiliated person'' as a person who owns, directly or indirectly, or controls 5% of the voting securities of the Bank. A member director does not directly own voting securities of a Bank but may be deemed to indirectly own or control the securities under certain scenarios (*e.g.,* if the member director owns 25% of the voting securities of the member). *See* 15 U.S.C. 78c(a)(19) and 78j–1. Under SEC rule 10A–3, promulgated pursuant to SOA section 301, an audit committee director is considered ''affiliated'' if the director directly or indirectly ''controls'' the Bank. Under rule 10A–3, a person will be deemed not to have ''control'' if the person, directly or indirectly, owns 10% or less of the voting securities of the Bank. *See* 17 CFR 240.10A–3. Nine of the Banks have stated in their federal securities laws filings that all members of their audit committees have satisfied the independence requirements under SEC rule 10A–3.

[3] *See* Enhanced Prudential Standards and Early Remediation Requirements for Covered Companies, Board of Governors of the Federal Reserve System, 77 FR 594 (Jan. 5, 2012).

rule would specify certain responsibilities of the CRO, which would include: (1) Allocating delegated risk limits; (2) establishing appropriate policies, processes, and systems to identify and report risks; (3) managing risk exposures and controls; and (4) reporting risk management issues directly and regularly to the risk committee and the chief executive officer. The CRO also must have risk management expertise commensurate with the regulated entity's capital structure, risk profile, complexity, activities, and size. The board would be required to structure the CRO's compensation in such a manner as to provide for an objective and independent assessment of the risks taken by the regulated entity.

Compliance Program (1239.12)

This provision of the proposed rule would require the regulated entities to establish a compliance program headed by a compliance officer and would set forth criteria for the program. These provisions would be carried over, with modest conforming changes, from OFHEO regulation § 1710.19, and thus would be new only for the Banks. The compliance program to be established under this provision must be reasonably designed to ensure that the regulated entity complies with applicable laws, rules, regulations, and internal controls. In addition to reporting directly to the chief executive officer, the compliance officer must report regularly to the entity's board of directors (or a committee thereof) on the adequacy of the entity's compliance policies and procedures, and must recommend any appropriate adjustments to those policies or procedures. Other provisions of the OFHEO regulation, at § 1710.19(b) and (c), which deal with risk management and registration of Enterprise stock under the federal securities laws, would be repealed as either being addressed elsewhere or no longer being relevant.

Regulatory Reports (1239.13)

The last section of Subpart C would require each regulated entity to provide FHFA with such regulatory reports as are necessary for it to evaluate the condition of a regulated entity, or compliance with applicable law, and to do so in accordance with the forms and instructions issued by FHFA from time to time. This provision would be relocated, with only minor non-substantive changes, from the Finance Board regulations at 12 CFR 914.1 and 914.2. FHFA has the statutory authority to compel all regulated entities to submit the reports described in § 1239.13. 12 U.S.C. 4514. Therefore, applying this provision to all regulated entities would not impose any new burdens on the Enterprises, but would serve to highlight the importance of timely and accurate data reporting.

D. Enterprise-Specific Requirements (Subpart D)

Subpart D of the proposed rule would carry over two OFHEO regulations relating to: (1) Eligibility requirements for the board of directors of the Enterprises and conduct of their board meetings; and (2) compensation for Enterprise directors. The first provision is substantively identical to the current OFHEO regulation § 1710.11, while the second provision is based on § 1710.13, with minor changes that eliminate portions relating to compensation of executive officers and employees, which are no longer necessary. Neither of these two provisions would be applied to the Banks because section 7 of the Bank Act, 12 U.S.C. 1427, already establishes eligibility requirements and mandates a specific composition of Bank boards between member directors and independent directors, and because section 7 and 12 CFR part 1261 of the FHFA regulations already include provisions governing compensation for directors of the Banks.

Enterprise Board of Director Requirements (1239.20)

The first provision of Subpart D addresses age and term limits for individual Enterprise board members and requires that a majority of the directors be independent, as defined under the rules of the NYSE. It also addresses the frequency of Enterprise board meetings, quorum requirements, and voting by directors. These provisions are being carried over from § 1710.11 without substantive change and would apply only to the Enterprises. In addition, proposed § 1239.20 includes a new provision that would prohibit the chief executive officer (CEO) of an Enterprise from also serving as the chairman of the board of directors. FHFA is proposing to add this requirement in order to promote the board of directors' oversight of senior management. By separating the two positions, FHFA intends to preclude the possibility that a CEO would have an opportunity to unduly influence the full board of directors by virtue of holding the chairman's position.

Compensation of Enterprise Board Members (1239.21)

The second provision of Subpart D states that Enterprise director compensation must be reasonable and appropriate for the time required for the performance of their duties. This provision is based on § 1710.13 of the OFHEO regulations, which addresses compensation of Enterprise board members, as well as Enterprise officers and employees. The proposed rule would differ from the OFHEO rule in that it would apply only to compensation paid to the directors of an Enterprise. Because FHFA has recently adopted an interim rule addressing executive compensation matters for the Banks and the Enterprises, there is no longer any need to address the matter of executive compensation in these provisions. As for non-executive employees, FHFA believes that a separate regulation is not necessary as those salaries will be set by an entity's executives, whose compensation is subject to FHFA review.

E. Subpart E—Bank-Specific Requirements

Subpart E of the proposed rule would carry over from the Finance Board regulations five provisions that address a Bank's: (1) Member products policy; (2) strategic business plan; (3) internal control system; (4) audit committee; and (5) dividends. The proposed provisions derive from current Finance Board regulations on these topics, which will be relocated to subpart E with only minor and conforming changes. As discussed in more detail below, FHFA believes that three of these provisions—regarding the member products policy, business plan, and dividends—are unique to the Banks and thus should not be applied to the Enterprises. Although FHFA is proposing to include the Finance Board provisions on internal controls and audit committees in the ''Bank specific'' portion of the rule, it also is requesting comment on whether it would be appropriate to revise those provisions so that they could be applied to both the Banks and the Enterprises.

Bank Member Product Policy (1239.30)

Finance Board regulations require each Bank to have a member products policy that addresses the Bank's management of products offered to members and housing associates. *See* 12 CFR 917.4. Under that provision, a Bank's board of directors must review the policy annually, amend it as appropriate, and readopt it at least every three years. The policy must address certain specified topics, which are: (1) Credit underwriting criteria; (2) levels of collateralization; (3) fees and product pricing; (4) maintenance of appropriate systems, procedures, and internal controls; and (5) maintenance of appropriate operational and personnel

capacity. The proposed rule would simply relocate the existing Finance Board regulations without substantive change.

Strategic Business Plan (1239.31)

Finance Board regulations also require each Bank's board of directors to adopt a strategic business plan that describes how each Bank will achieve its housing finance mission, and how each Bank establishes goals and objectives for each of its business activities. *See* 12 CFR § 917.5. The plan must also: (1) Discuss how a Bank will address credit needs and market opportunities; (2) establish quantitative performance goals for Bank products related to multi-family housing, small business, small farm, and small agri-business lending; (3) describe proposed new business activities; and (4) be supported by appropriate research and analysis of market developments and member demand for products. Each Bank's board of directors must review the plan at least annually, readopt it at least every three years, and establish management reporting requirements and monitor implementation. The proposed rule would simply relocate this regulation without substantive change to the FHFA regulations. FHFA is not proposing to extend it to the Enterprises because their strategic objectives are subject to FHFA control as a result of the conservatorships.

Internal Control System (1239.32)

The proposed rule would carry over, without substantive change, the Finance Board regulation dealing with internal control systems at the Banks. *See* 12 CFR 917.6. The current Finance Board regulation requires each Bank to establish and maintain an effective internal control system that addresses: (1) The efficiency and effectiveness of Bank activities; (2) the safeguarding of Bank assets; (3) the reliability, completeness, and timely reporting of financial and management information; and (4) compliance with applicable laws, regulations, policies, and management and board directives. The regulation sets forth detailed responsibilities of senior management and the board of directors with respect to internal controls. This regulation would not apply to the Enterprises, as many of the detailed requirements in the provision are specific to the Banks and reflect their unique structure.

Nonetheless, the topic of internal controls is one that is relevant to both the Banks and the Enterprises, and FHFA is considering whether it should adopt a regulation on internal controls that would apply to all of the regulated entities. Accordingly, FHFA specifically requests public comment on the following questions:

1. In what manner should FHFA revise the content of § 917.6 so that it could be applied to all regulated entities, and what specific revisions to the regulatory text would be needed to accomplish that objective?

2. What regulatory approach would be best suited for addressing the topic of internal controls at the Banks and Enterprises, one based on general principles, or one that includes detailed requirements that prescribe particular steps that an entity should take in creating and operating a system of internal controls?

3. If FHFA were to adopt a more prescriptive approach to a regulation on internal controls, is the current approach, which separately addresses the requirements of an internal control system, the responsibilities of the board, and the responsibilities of management, appropriate?

4. If FHFA were to adopt a more principles-based approach to internal controls, what principles would be necessary to assure that regulated entities would establish and maintain an effective system of internal controls?

5. What amendments to the regulation or the Prudential Standards would be most appropriate to ensure that they complement each other with respect to the entities' internal control systems?

6. Should the proposed § 1239.32(a)(iv) retain the requirement that the internal control system must ensure that the entity complies with all applicable laws and regulations if the proposed rule will separately require that the entities establish a compliance program to address that same topic?

7. Are there any types of internal control requirements that would be unique to either the Banks or the Enterprises and could not readily be applied to the other entities?

Audit Committee (1239.33)

The proposed rule also would carry over without substantive change the provisions of the Finance Board regulations dealing with Bank audit committees. *See* 12 CFR 917.7. Those provisions would set forth requirements relating to the composition of the audit committee and the content of the audit committee charter. They would also require that the audit committee members be independent and establish certain independence criteria. The proposal would retain the provision requiring the audit committee to include a balance of representatives of community financial institutions and other members, as well as independent directors and member directors. The audit committee would be required to have a charter that covers the selection and retention of the internal auditor and reporting channels for the auditor. The regulation also lists numerous duties of the audit committee, including: (1) Directing senior management to maintain the reliability and integrity of the accounting policies; (2) reviewing the basis for the Bank's financial statements and the external auditor's opinion; (3) overseeing the audit function; and (4) conducting or authorizing investigations.

The Finance Board regulation on Bank audit committees reflects the unique structure of the Banks as member-owned cooperatives whose boards of directors include a majority of member directors that also serve as officers or directors of their member institutions. Because the board structure of the Banks is unique and differs so much from that of the Enterprises, FHFA believes that it is appropriate to retain the Bank-specific regulations for the Banks' audit committees. FHFA is not proposing to impose these requirements on the Enterprises because of those differences and because the Enterprises are separately required (by the OFHEO regulations and by this proposed rule) to comply with the audit committee requirements of section 301 of the SOA and the rules of the NYSE.

Nonetheless, the topic of audit committees is one that is relevant to both the Banks and the Enterprises, and FHFA requests comments on the following questions:

1. By carrying over the existing Finance Board and OFHEO regulations, the proposed rule would effectively retain the two distinct regulatory approaches embodied in the current rules, *i.e.,* OFHEO's approach of using a cross-reference to the SOA audit committee provisions and the Finance Board's approach of using the considerably more detailed regulatory provisions to address audit committee responsibilities. FHFA requests comment on whether it should continue this arrangement or whether it should develop one rule on audit committees that would apply to both the Banks and the Enterprises. FHFA also requests comment on how a single rule should be structured, *i.e.,* whether it should adopt the approach of the current OFHEO regulations, the approach of the Finance Board regulations, or some other approach.

2. If FHFA were to retain the substance of the current Finance Board rule for Bank audit committees (either for the Banks or for the Banks and the Enterprises), FHFA requests comments

on how it could modify the provisions of that rule (which would be located at § 1239.33 of this proposal) to make them more streamlined while also providing sufficient guidance to the regulated entities to ensure that the audit committees function in an independent and efficient manner.

3. With respect to the independence requirement of the current Finance Board regulation, FHFA requests comments on whether it should add a new provision that would deem a member director to not be ''independent'' for audit committee purposes if the member institution at which that director is employed were to have more than a specified percentage of the Bank's outstanding capital stock or the Bank's total advances. FHFA also requests comments regarding the level at which a member's Bank stock or advances could be considered to be too high for that member's representative to be deemed sufficiently independent to serve on the Bank's audit committee.[4]

4. With respect to the composition of Bank audit committees, which must include a balance of representatives from community financial institutions and other members, and of independent and member directors, FHFA requests comment on whether that provision remains optimal or whether the regulation should require any other requirements relating to audit committee composition, such as requiring a majority of the committee members to be independent directors.

5. With respect to the relationship between the audit committee regulations and the Prudential Standards, FHFA requests comment on how best to coordinate the audit committee regulations with the provisions of Standard 2, which also addresses audit committees, whether FHFA should address audit committee requirements entirely within either the regulations or the standards, and what matters would be more appropriately addressed in a regulation or in the Prudential Standards.

Bank Dividends (1239.34)

The last regulation in Subpart E would carry over with only modest revisions a Finance Board regulation addressing Bank dividends. *See* 12 CFR 917.9. Among other things, that provision prohibits a Bank's board of directors from declaring or paying a dividend based on projected or anticipated earnings or if the par value of the Bank's stock is impaired, or would become impaired as a result of paying the dividend. The proposed rule would not carry over two provisions from § 917.9 whose content either is addressed in another regulation or relates to statutory provisions that are no longer in effect. FHFA is proposing not to apply this provision to the Enterprises, in part because it carries out provisions of the Bank Act that apply only to the Banks and in part because Enterprise dividends during conservatorship are governed by the senior preferred stock purchase agreements.

F. Provisions To Be Repealed

As noted above, there are several portions of 12 CFR part 917 and 12 CFR part 1710 that have become obsolete or are no longer necessary, and FHFA is proposing to repeal them as part of this rulemaking. The repealed provisions consist of: (1) Several OFHEO regulations that impose requirements substantively identical to those found in the SOA; (2) an OFHEO regulation that reserves the right of FHFA to amend its regulations; (3) an OFHEO regulation that states that FHFA has the authority under the Safety and Soundness Act to prohibit or restrict indemnification of board members and executives of the Enterprises; (4) portions of the OFHEO regulation relating to the responsibilities of boards of directors that address matters that are covered by the Prudential Standards; and (5) a Finance Board regulation that requires Banks to prepare annual budgets.

SOA Provisions

OFHEO regulations at § 1710.13(b), § 1710.16, § 1710.17, § 1710.18, and § 1710.19(c) are substantively identical to requirements found in the SOA, which apply to the Banks and Enterprises as registered issuers under the federal securities laws.[5] These regulations address reimbursement of compensation paid to an Enterprise CEO or CFO in cases of accounting restatements due to material noncompliance with financial reporting requirements, prohibitions on extensions of credit to Enterprise board members and executives, certification of quarterly and annual financial statements by the CEO and CFO, audit partner rotation, and registration and deregistration of securities. Because the Enterprises and the Banks are subject to the corresponding SOA statutory provisions, there is no need to repeat those requirements in the FHFA regulations.

Board of Directors

As noted previously, § 1710.15 of the OFHEO regulations addresses the conduct and responsibilities of Enterprise directors, and FHFA is proposing to carry over certain of those provisions into § 1239.4 of the proposed rule. FHFA also is proposing to repeal the remaining portions of § 1710.15, which include the introductory language, language requiring directors to refer to state law and OFHEO pronouncements for additional guidance, several provisions requiring the board to have policies for overseeing corporate strategy, hiring of qualified senior executives, financial reporting, and extensions of credit to board members. FHFA believes that these matters are adequately addressed in other provisions of the proposed rule or in the Prudential Standards, and need not be adopted as FHFA regulations.

Budget Preparation

Finance Board regulation § 917.8 requires Banks to adopt an operating and a capital expenditures budget annually. FHFA believes that the adoption of a budget is a basic duty already encompassed in a director's duty to act in good faith and with care in overseeing the affairs of a Bank. Therefore, FHFA is not proposing to carry this Finance Board provision over into the FHFA regulations.

Part 1720

As noted previously, FHFA is proposing to repeal 12 CFR part 1720 of the OFHEO regulations, which established certain safety and soundness standards for the Enterprises, because those matters are addressed by the Prudential Standards and by certain parts of this proposed rule.

IV. Prudential Standards

The introductory section of the Prudential Standards, which appears immediately before the enumerated 10 standards, recites general responsibilities of the boards of directors and senior management of the regulated entities, as they relate to the matters addressed by the individual standards. FHFA is proposing to explicitly state that this introductory

[4] For example, the Federal Deposit Insurance Corporation prohibits ''large customers'' from serving on the audit committee of a regulated institution that has total assets of more than $3 billion at the beginning of the fiscal year. ''Large customer'' is defined as ''any individual or entity (including a controlling person of any such entity) which, in the determination of the board of directors, has such significant direct or indirect credit or other relationships with the institution, the termination of which likely would materially and adversely affect the institution's financial condition or results of operations . . .'' *See* 12 CFR § 363.5(b) and Appendix A to 12 CFR 363.

[5] Section 1112 of HERA requires the Banks to maintain registration of their common stock with the SEC and states that equity securities of the Enterprises are not exempt from SEC registration requirements.

section is part of the standards, which means that the introductory provisions would have the same effect and could be enforced in the same manner as the 10 enumerated standards. To do this, FHFA is proposing to amend the definition of the term ''standards,'' which appears in 12 CFR 1236.2, by adding an explicit statement that the Prudential Standards consist of both the introductory section and the existing enumerated standards. FHFA is also proposing to revise the Prudential Standards by relocating a sentence that appears immediately after the introductory language and immediately before the 10 enumerated standards, that reads as follows: ''The following provisions constitute the prudential management and operations standards established pursuant to 12 U.S.C. 4513b(a).'' FHFA would relocate this sentence to the beginning of the Prudential Standards and immediately before the existing introductory language regarding director and senior management responsibilities. FHFA is proposing these amendments to ensure that it can use the remedial provisions of the Prudential Standards to address corporate governance deficiencies at the regulated entities, as they may relate to the individual standards, should FHFA believe that those provisions will be more effective than its other administrative enforcement authorities.

Harmonization of the Prudential Standards and FHFA Regulations

The Prudential Standards address certain topics that also are covered by the existing regulations and would continue to be covered by the proposed regulations, which results in a degree of regulatory overlap. Despite that overlap, there are meaningful differences between the two provisions, some of which may be appropriate to preserve. One key difference is that because the Prudential Standards have been adopted as guidance, they do not have the force and effect of law, as do the regulations addressing the same topics. For that reason, the Prudential Standards may be enforced only by the remedial authorities in the Prudential Standards statute, and not through the agency's administrative enforcement powers, which can be used to enforce regulations, unless a regulated entity's failure to meet a prudential standard rises to the level of an unsafe or unsound practice. FHFA is not proposing to address in this regulation all of the potential areas of overlap between the Prudential Standards and the regulations, but does intend to initiate a separate project to identify any regulations that address topics that are also covered by the Prudential Standards, or would more appropriately be covered by a Prudential Standard. To aid it in that undertaking, FHFA is requesting comments on how it may best integrate and harmonize its regulations and the Prudential Standards, particularly with respect to the seven topics described below.

General Duties of Boards of Directors. To certain degrees, both the Prudential Standards and the regulations address the general responsibilities of the boards of directors of the regulated entities. Within the Standards, the first three principles of the introductory section address certain director responsibilities, as they relate to the subject matter of each of the Prudential Standards, such as adopting business strategies and policies, overseeing management, and remaining informed about the operations and condition of a regulated entity. The proposed regulation, at § 1239.4, also would address the duties and responsibilities of the boards of directors, albeit in a more global sense, *i.e.,* not simply in relation to the subject matter of the 10 prudential standards.

Board Briefings. Principles seven and eight of the introductory section of the Prudential Standards require management to provide the board of directors with periodic reports on the entity's condition and performance. This is similar to proposed § 1239.20(b)(4), which would apply only to the Enterprise and requires management to provide boards with information that is necessary to allow the directors to fulfill their fiduciary duties.

Audit Committee Responsibilities. Several provisions of the Prudential Standards, paragraphs 2.1, 2.3–2.7, and 2.9–2.10, address audit committee responsibilities, including establishing policies for and overseeing the internal audit function, evaluating the effectiveness of the internal audit function, addressing internal audit issues, and ensuring that audit department personnel are competent and properly trained. Section 1239.33 of the proposed rule, which is based on a Finance Board regulation and would apply only to the Banks, also addresses certain of these same topics.

Risk Management. Although the Prudential Standards do not address specific duties of the risk committee or the CRO, Standards 8.2, 8.4–8.5, 8.7, 8.9–8.10, and principles nine and 10 of the introductory section do require a regulated entity to have a risk management program that is capable of addressing a number of the topics. Certain of those topics are also addressed in § 1239.11 of the proposed rule. In addition, both § 1239.11 and the Prudential Standards provide that the CRO should report to the CEO and the risk committee.

Internal Controls. Prudential Standards 1.1, 1.3–1.8, 1.10, and 1.14–1.15 require regulated entities to have an adequate and effective system of internal controls, including a board-approved organizational structure that clearly assigns responsibilities and reporting relationships. Under those provisions, a regulated entity also must establish and monitor appropriate internal control policies. These same topics and related concepts are also addressed in § 1239.32, which is based on an existing Finance Board regulation and would apply only to the Banks.

Code of Conduct. Principle nine of the introductory section of the Prudential Standards states that board members and senior management of a regulated entity should conduct themselves in a manner to promote high ethical standards and establish a culture of compliance throughout the organization. Section 1239.10, which would apply to all regulated entities, also addresses the topic of codes of conduct and ethics.

Compliance with Laws and Regulations. Prudential Standards 1–5 and 8–10 each contain a paragraph that states that, with respect to the subject matter addressed by that standard, a regulated entity should comply with all applicable laws, regulations, and supervisory guidance. The subject of regulatory compliance is also addressed in § 1239.12, which requires each entity to have a compliance program.

With respect to each of those topics described above, FHFA requests comments on whether there are any direct conflicts between the regulations and the standards, *i.e.,* situations in which an entity cannot practicably comply with both the regulation and the standard. FHFA also requests comments on how it should strike the balance for each of those topics with respect to what issues should be addressed by regulation and what issues should be addressed by the Prudential Standards. FHFA further requests comments on the content of the particular regulations and standards, *i.e.,* whether the current content remains appropriate, as well as the structure of the regulations or standards, *i.e.,* whether they should address the underlying subject matter through a principles-based approach or through the more prescriptive approach reflected in the current Finance Board regulations.

V. Paperwork Reduction Act

The proposed regulation does not contain any information collection requirement that requires the approval of the Office of Management and Budget under the Paperwork Reduction Act (44 U.S.C. 3501 *et seq.*).

VI. Regulatory Flexibility Act

The Regulatory Flexibility Act (5 U.S.C. 601 *et seq.*) requires an agency to analyze a proposed regulation's impact on small entities if the final rule is expected to have a significant economic impact on a substantial number of small entities. 5 U.S.C. 605(b). FHFA has considered the impact of this regulation and determined that it is not likely to have a significant economic impact on a substantial number of small entities because it applies only to the regulated entities, which are not small entities for purposes of the Regulatory Flexibility Act.

List of Subjects

12 CFR Part 914

Federal Home Loan Banks, Reporting and recordkeeping requirements.

12 CFR Part 917

Federal Home Loan Banks.

12 CFR Part 1236

Administrative practice and procedure, Federal Home Loan Banks, Government-Sponsored Enterprises, Reporting and recordkeeping requirements.

12 CFR Part 1239

Administrative practice and procedure, Federal Home Loan Banks, Government-Sponsored Enterprises, Reporting and recordkeeping requirements.

12 CFR Part 1710

Administrative practice and procedure, Mortgages.

12 CFR Part 1720

Administrative practice and procedure, Mortgages.

Accordingly, for reasons stated in the Supplementary Information and under the authority of 12 U.S.C. 1426, 1427, 1432(a), 1436(a), 1440, 4511(b), 4513(a), 4513(b), and 4526, FHFA hereby proposes to amend subchapter C of chapter IX, subchapter B of chapter XII, and subchapter C of chapter XVII of title 12 of the Code of Federal Regulations as follows:

CHAPTER IX—FEDERAL HOUSING FINANCE BOARD

Subchapter C—[Removed and Reserved]

■ 1. Subchapter C, consisting of parts 914 and 917, is removed and reserved.

CHAPTER XII—FEDERAL HOUSING FINANCE AGENCY

Subchapter B—Entity Regulations

PART 1236—PRUDENTIAL MANAGEMENT AND OPERATIONS STANDARDS

■ 2. The authority citation for part 1236 continues to read as follows:

Authority: 12 U.S.C. 4511, 4513(a) and (f), 4513b, and 4526.

■ 3. Amend § 1236.2 by revising the definition of ''Standards'' to read as follows:

§ 1236.2 Definitions.

* * * * *

Standards means any one or more of the prudential management and operations standards established by the Director pursuant to 12 U.S.C. 4513b(a), as modified from time to time pursuant to § 1236.3(b), including the introductory statement of general responsibilities of boards of directors and senior management of the regulated entities.

Appendix to Part 1236 [Amended]

■ *4. Amend the appendix to part 1236 by removing the undesignated paragraph ''The following provisions constitute the prudential management and operations standards established pursuant to 12 U.S.C. 4513b(a).'' following paragraph 10 under* ''Responsibilities of the Board of Directors and Senior Management'' and adding it as introductory text to the appendix.

■ 5. Part 1239 is added to read as follows:

PART 1239—RESPONSIBILITIES OF BOARDS OF DIRECTORS, CORPORATE PRACTICES, AND CORPORATE GOVERNANCE

Subpart A—General

Sec.

1239.1 Purpose.
1239.2 Definitions.

Subpart B—Corporate Practices and Procedures Applicable to All Regulated Entities

1239.3 Law applicable to corporate governance and indemnification practices.
1239.4 Duties and responsibilities of directors.
1239.5 Board committees.

Subpart C—Other Requirements Applicable to All Regulated Entities

1239.10 Code of conduct and ethics.
1239.11 Risk management.
1239.12 Compliance program.
1239.13 Regulatory reports.

Subpart D—Enterprise Specific Requirements

1239.20 Board of directors of the Enterprises.
1239.21 Compensation of Enterprise board members.

Subpart E—Bank Specific Requirements

1239.30 Bank member product policy.
1239.31 Strategic business plan.
1239.32 Internal control system.
1239.33 Audit committee.
1239.34 Dividends.

Authority: 12 U.S.C. 1426, 1427, 1432(a), 1436(a), 1440, 4511(b), 4513(a), 4513(b), and 4526.

Subpart A—General

§ 1239.1 Purpose.

FHFA is responsible for supervising and ensuring the safety and soundness of the regulated entities. In furtherance of those responsibilities, this part sets forth minimum standards with respect to responsibilities of boards of directors, corporate practices, and corporate governance matters of the regulated entities.

§ 1239.2 Definitions.

As used in this part (or, as otherwise noted):

Authorizing statutes mean the Federal National Mortgage Association Charter Act and the Federal Home Loan Mortgage Corporation Act, which are codified at 12 U.S.C. 1716 through 1723i and 12 U.S.C. 1451 through 1459, respectively, or the Bank Act, as applicable.

Board member means a member of the board of directors of a regulated entity.

Board of directors means the board of directors of a regulated entity.

Business risk means the risk of an adverse impact on a regulated entity's profitability resulting from external factors as may occur in both the short and long run.

Community financial institution has the meaning set forth in § 1263.1 of this chapter.

Compensation means any payment of money or the provision of any other thing of current or potential value in connection with employment or service as a director.

Credit risk is the potential that a borrower or counterparty will fail to meet its financial obligations in accordance with agreed terms.

Employee means an individual, other than an executive officer, who works

part-time, full-time, or temporarily for a regulated entity.

Executive officer means the chairperson or vice chairperson of the board of directors of an Enterprise; and, with respect to any regulated entity, the chief executive officer, chief financial officer, chief operating officer, president, any executive vice president, any senior vice president, and any individual with similar responsibilities, without regard to title, who is in charge of a principal business unit, division, or function, or who reports directly to the chairperson, vice chairperson, chief operating officer, or chief executive officer or president of a regulated entity.

Immediate family member means a parent, sibling, spouse, child, dependent, or any relative sharing the same residence.

Internal auditor means the individual responsible for the internal audit function at a regulated entity.

Liquidity risk means the risk that a regulated entity will be unable to meet its financial obligations as they come due or meet the credit needs of its members and associates in a timely and cost-efficient manner.

Market risk means the risk that the market value, or estimated fair value if market value is not available, of a regulated entity's portfolio will decline as a result of changes in interest rates, foreign exchange rates, or equity or commodity prices.

NYSE means the New York Stock Exchange.

Operational risk means the risk of loss resulting from inadequate or failed internal processes, people, or systems, or from external events (including legal risk but excluding strategic and reputational risk).

Significant deficiency means a deficiency, or a combination of deficiencies, in internal control that is less severe than a material weakness, yet important enough to merit attention by those charged with governance.

SOA means the Sarbanes Oxley Act, Pub. L. 107–204 (2002).

Subpart B—Corporate Practices and Procedures Applicable to All Regulated Entities

§ 1239.3 Law applicable to corporate governance and indemnification practices.

(a) *General.* The corporate governance practices and procedures of each regulated entity, and practices and procedures relating to indemnification (including advancement of expenses), shall comply with and be subject to the applicable authorizing statutes and other Federal law, rules, and regulations, and shall be consistent with the safe and sound operations of the regulated entities.

(b) *Election and designation of body of law.* (1) To the extent not inconsistent with paragraph (a) of this section, each regulated entity shall elect to follow the corporate governance and indemnification practices and procedures set forth in one of the following:

(i) The law of the jurisdiction in which the principal office of the regulated entity is located;

(ii) The Delaware General Corporation Law (Del. Code Ann. Title 8); or

(iii) The Revised Model Business Corporation Act.

(2) Each regulated entity shall designate in its bylaws the body of law elected for its corporate governance and indemnification practices and procedures pursuant to this paragraph.

(c) *Indemnification.* (1) Subject to paragraphs (a) and (b) of this section, to the extent applicable, a regulated entity shall indemnify (and advance the expenses of) its directors, officers, and employees under such terms and conditions as are determined by its board of directors. The regulated entity is authorized to maintain insurance for its directors and any other officer or employee.

(2) Each regulated entity shall have in place policies and procedures consistent with this section for indemnification of its directors, officers, and employees. Such policies and procedures shall address how the board of directors is to approve or deny requests for indemnification from current and former directors, officers, and employees, and shall include standards relating to indemnification, investigations by the board of directors, and review by independent counsel.

(3) Nothing in this paragraph shall affect any rights to indemnification (including the advancement of expenses) that a director or any other officer or employee had with respect to any actions, omissions, transactions, or facts occurring prior to the effective date of this paragraph.

(4) FHFA has the authority under the Safety and Soundness Act to review a regulated entity's indemnification policies, procedures, and practices, and may limit or prohibit indemnification payments in furtherance of the safe and sound operations of the regulated entity.

§ 1239.4 Duties and responsibilities of directors.

(a) *Management of a regulated entity.* The management of each regulated entity shall be vested in its board of directors. While boards of directors may delegate the execution of operational functions to officers and employees of the regulated entity, the ultimate responsibility of each entity's board of directors for that entity's management is non-delegable. The board of directors of a regulated entity is responsible for directing the conduct and affairs of the entity in furtherance of the safe and sound operation of the entity and shall remain reasonably informed of the condition, activities, and operations of the entity.

(b) *Duties of directors.* Each director of a regulated entity shall have the duty to:

(1) Carry out his or her duties as director in good faith, in a manner such director believes to be in the best interests of the regulated entity, and with such care, including reasonable inquiry, as an ordinarily prudent person in a like position would use under similar circumstances;

(2) Administer the affairs of the regulated entity fairly and impartially and, for Bank directors, without discrimination in favor of or against any member institution;

(3) At the time of election, or within a reasonable time thereafter, have a working familiarity with basic finance and accounting practices, including the ability to read and understand the regulated entity's balance sheet and income statement and to ask substantive questions of management and the internal and external auditors;

(4) Direct the operations of the regulated entity in conformity with the requirements set forth in the authorizing statutes, Safety and Soundness Act, and this chapter; and

(5) Adopt and maintain in effect at all times bylaws governing the manner in which the regulated entity administers its affairs. Such bylaws shall be consistent with applicable laws and regulations administered by FHFA, and with the body of law designated for the entity's corporate governance practices and procedures.

(c) *Director responsibilities.* The responsibilities of the board of directors include having in place adequate policies and procedures to assure its oversight of, among other matters, the following:

(1) The risk management and compensation programs of the regulated entity;

(2) The processes for providing accurate financial reporting and other disclosures, and communications with stockholders; and

(3) The responsiveness of executive officers in providing accurate and timely reports to FHFA and in addressing all supervisory concerns of

FHFA in a timely and appropriate manner.

(d) *Authority regarding staff and outside consultants.* (1) In carrying out its duties and responsibilities under the authorizing statutes, the Safety and Soundness Act, and this chapter, each regulated entity's board of directors and all committees thereof shall have authority to retain staff and outside counsel, independent accountants, or other outside consultants at the expense of the regulated entity.

(2) The board of directors and its committees may require that staff of the regulated entity that provides services to the board or any committee under paragraph (d)(1) of this section report directly to the board or such committee, as appropriate.

§ 1239.5 Board committees.

(a) *General.* The board of directors may rely, in directing a regulated entity, on reports from committees of the board of directors, provided, however, that no committee of the board of directors shall have the authority of the board of directors to amend the bylaws and no committee shall operate to relieve the board of directors or any board member of a responsibility imposed by applicable law, rule, or regulation.

(b) *Required committees.* The board of directors of each regulated entity shall have committees, however styled, that address each of the following areas of responsibility: Risk management, audit, compensation, and corporate governance (in the case of the Banks, including the nomination of independent board of director candidates, and, in the case of the Enterprises, including the nomination of all board of director candidates). The risk management committee and the audit committee shall not be combined with any other committees. The board of directors may establish any other committees that it deems necessary or useful to carrying out its responsibilities, subject to the provisions of this section. In the case of the Enterprises, board committees shall comply with the charter, independence, composition, expertise, duties, responsibilities, and other requirements set forth under rules issued by the NYSE, and the audit committees shall also comply with the requirements set forth under section 301 of the SOA.

(c) *Charter.* Each committee shall adopt, and the board of directors of each regulated entity shall approve, a formal written charter that specifies the scope of a committee's powers and responsibilities, as well as the committee's structure, processes, and membership requirements.

(d) *Frequency of meetings.* Each committee of the board of directors shall meet regularly and with sufficient frequency to carry out its obligations and duties under applicable laws, rules, regulations, and guidelines. Such a committee shall also meet with sufficient timeliness as necessary in light of relevant conditions and circumstances to fulfill its obligations and duties.

Subpart C—Other Requirements Applicable to All Regulated Entities

§ 1239.10 Code of conduct and ethics.

(a) *General.* A regulated entity shall establish and administer a written code of conduct and ethics that is reasonably designed to assure the ability of board members, executive officers, and employees of the regulated entity to discharge their duties and responsibilities, on behalf of the regulated entity, in an objective and impartial manner, and that includes standards required under section 406 of the SOA, as amended from time to time, and other applicable laws, rules, and regulations.

(b) *Review.* Not less often than once every three years, a regulated entity shall review the adequacy of its code of conduct and ethics for consistency with practices appropriate to the entity and make any appropriate revisions to such code.

§ 1239.11 Risk management.

(a) *Risk management program*—(1) *Adoption.* Each regulated entity's board of directors shall have in effect at all times an enterprise-wide risk management program that establishes the regulated entity's risk profile, aligns the risk profile with the regulated entity's strategies and objectives, and addresses the regulated entity's exposure to credit risk, market risk, liquidity risk, business risk and operational risks and complies with the requirements of this part and with all applicable FHFA regulations and policies.

(2) *Risk profile.* The board of directors and senior management shall ensure that the risk management program aligns the regulated entity's overall risk profile with its mission objectives.

(b) *Risk committee.* The board of each regulated entity shall establish and maintain a risk committee of the board of directors that is responsible for oversight of enterprise-wide risk management practices of the regulated entity.

(c) *Risk committee structure and requirements.* (1) The risk management program shall include:

(i) Risk limitations appropriate to each business line of the regulated entity;

(ii) Appropriate policies and procedures relating to risk management governance, risk management practices, and risk control infrastructure, and processes and systems for identifying and reporting risks, including emerging risks;

(iii) Provisions for monitoring compliance with the regulated entity's risk limit structure and policies and procedures relating to risk management governance, practices, risk controls, and effective and timely implementation of corrective actions; and

(iv) Provisions specifying management's authority and independence to carry out risk management responsibilities, and the integration of risk management and control objectives in management goals and compensation structure.

(2) The risk committee shall:

(i) Be chaired by a director not serving in a management capacity of the regulated entity;

(ii) Have at least one member with risk management expertise that is commensurate with the regulated entity's capital structure, risk profile, complexity, activities, size, and other appropriate risk-related factors;

(iii) Have committee members with an understanding of risk management principles and practices relevant to the regulated entity;

(iv) Have members with experience developing and applying risk management practices and procedures, measuring and identifying risks, and monitoring the testing risk controls with respect to financial services organizations;

(v) Fully document and maintain records of its meetings, including its risk management decisions and recommendations; and

(vi) Report directly to the board and not as part of, or combined with, another committee.

(d) *Risk committee responsibilities.* The risk committee shall:

(1) Be responsible for documenting and overseeing the enterprise-wide risk management policies and practices of the regulated entity;

(2) Review and approve an appropriate risk management program that is commensurate with the regulated entity's capital structure, risk profile, complexity, activities, size, and other appropriate risk-related factors; and

(3) Receive and review regular reports from the regulated entity's chief risk officer.

(e) *Chief Risk Officer*—(1) *Appointment of a chief risk officer*

(CRO). Each regulated entity shall appoint a CRO to implement and maintain appropriate enterprise-wide risk management practices for the regulated entity.

(2) *Organizational structure of the risk management function.* The CRO shall oversee an independent risk management function, or unit, and shall report directly to the risk committee and to the chief executive officer.

(3) *Responsibilities of the CRO.* The CRO shall be responsible for oversight of:

(i) Allocating delegated risk limits and monitoring compliance with such limits;

(ii) Establishing appropriate policies and procedures relating to risk management governance, practices, and risk controls, and developing appropriate processes and systems for identifying and reporting risks, including emerging risks;

(iii) Monitoring risk exposures and risk controls, including testing risk controls and verifying risk measures; and

(iv) Reporting risk management issues and emerging risks, and ensuring that risk management issues are effectively resolved in a timely manner.

(4) The CRO shall execute the responsibilities enumerated in paragraph (e)(3) of this section on an enterprise-wide basis.

(5) The CRO should have risk management expertise that is commensurate with the regulated entity's capital structure, risk profile, complexity, activities, size, and other appropriate risk related factors.

(6) The CRO shall report regularly to the risk committee and to the chief executive officer on the entity's compliance with, and the adequacy of, its current risk management policies and procedures, and shall recommend any adjustments to such policies and procedures that he or she considers necessary or appropriate.

(7) The compensation of a regulated entity's CRO shall be appropriately structured to provide for an objective and independent assessment of the risks taken by the regulated entity.

§ 1239.12 Compliance program.

A regulated entity shall establish and maintain a compliance program that is reasonably designed to assure that the regulated entity complies with applicable laws, rules, regulations, and internal controls. The compliance program shall be headed by a compliance officer, however styled, who reports directly to the chief executive officer. The compliance officer also shall report regularly to the board of directors, or an appropriate committee thereof, on the adequacy of the entity's compliance policies and procedures, including the entity's compliance with them, and shall recommend any revisions to such policies and procedures that he or she considers necessary or appropriate.

§ 1239.13 Regulatory reports.

(a) *Reports.* Each regulated entity shall file Regulatory Reports with FHFA in accordance with the forms, instructions, and schedules issued by FHFA from time to time. If no regularly scheduled reporting dates are established, Regulatory Reports shall be filed as requested by FHFA.

(b) *Definition.* For purposes of this section, the term *Regulatory Report* means any report to FHFA of information or raw or summary data needed to evaluate the safe and sound condition or operations of a regulated entity, or to determine compliance with any:

(1) Provision in the Bank Act, Safety and Soundness Act, or other law, order, rule, or regulation;

(2) Condition imposed in writing by FHFA in connection with the granting of any application or other request by a regulated entity; or

(3) Written agreement entered into between FHFA and a regulated entity.

Subpart D—Enterprise Specific Requirements

§ 1239.20 Board of directors of the Enterprises.

(a) *Membership*—(1) *Limits on service of board members*—(i) *General requirement.* No board member of an Enterprise may serve on the board of directors for more than 10 years or past the age of 72, whichever comes first; provided, however, a board member may serve his or her full term if he or she has served less than 10 years or is 72 years on the date of his or her election or appointment to the board; and

(ii) *Waiver.* Upon written request of an Enterprise, the Director may waive, in his or her sole discretion and for good cause, the limits on the service of a board member under paragraph (a)(1)(i) of this section.

(2) *Independence of board members.* A majority of seated members of the board of directors of an Enterprise shall be independent board members, as defined under rules set forth by the NYSE, as amended from time to time.

(3) *Segregation of duties.* The position of chairperson of the board of directors shall be filled by a person other than the chief executive officer, who shall also be a director of the Enterprise that is independent, as defined under the rules set forth by the NYSE, as amended from time to time.

(b) *Meetings, quorum and proxies, information, and annual review*—(1) *Frequency of meetings.* The board of directors of an Enterprise shall meet at least eight times a year and no less than once a calendar quarter to carry out its obligations and duties under applicable laws, rules, regulations, and guidelines.

(2) *Non-management board member meetings.* Non-management directors of an Enterprise shall meet at regularly scheduled executive sessions without management participation.

(3) *Quorum of board of directors; proxies not permissible.* For the transaction of business, a quorum of the board of directors of an Enterprise is at least a majority of the seated board of directors and a board member may not vote by proxy.

(4) *Information.* Management of an Enterprise shall provide a board member of the Enterprise with such adequate and appropriate information that a reasonable board member would find important to the fulfillment of his or her fiduciary duties and obligations.

(5) *Annual review.* At least annually, the board of directors of an Enterprise shall review, with appropriate professional assistance, the requirements of laws, rules, regulations, and guidelines that are applicable to its activities and duties.

§ 1239.21 Compensation of Enterprise board members.

Each Enterprise may pay its directors reasonable and appropriate compensation for the time required of them, and their necessary and reasonable expenses, in the performance of their duties.

Subpart E—Bank Specific Requirements

§ 1239.30 Bank member products policy.

(a) *Adoption and review of member products policy*—(1) *Adoption.* Each Bank's board of directors shall have in effect at all times a policy that addresses the Bank's management of products offered by the Bank to members and housing associates, including but not limited to advances, standby letters of credit, and acquired member assets, consistent with the requirements of the Bank Act, paragraph (b) of this section, and all applicable FHFA regulations and policies.

(2) *Review and compliance.* Each Bank's board of directors shall:

(i) Review the Bank's member products policy annually;

(ii) Amend the member products policy as appropriate; and

(iii) Re-adopt the member products policy, including interim amendments, not less often than every three years.

(b) *Member products policy requirements.* In addition to meeting any other requirements set forth in this chapter, each Bank's member products policy shall:

(1) Address credit underwriting criteria to be applied in evaluating applications for advances, standby letters of credit, and renewals;

(2) Address appropriate levels of collateralization, valuation of collateral and discounts applied to collateral values for advances, and standby letters of credit;

(3) Address advances-related fees to be charged by each Bank, including any schedules or formulas pertaining to such fees;

(4) Address standards and criteria for pricing member products, including differential pricing of advances pursuant to § 1266.5(b)(2) of this chapter, and criteria regarding the pricing of standby letters of credit, including any special pricing provisions for standby letters of credit that facilitate the financing of projects that are eligible for any of the Banks' CICA programs under part 1292 of this chapter;

(5) Provide that, for any draw made by a beneficiary under a standby letter of credit, the member will be charged a processing fee calculated in accordance with the requirements of § 1271.6(b) of this chapter;

(6) Address the maintenance of appropriate systems, procedures and internal controls; and

(7) Address the maintenance of appropriate operational and personnel capacity.

§ 1239.31 Strategic business plan.

(a) *Adoption of strategic business plan.* Each Bank's board of directors shall have in effect at all times a strategic business plan that describes how the business activities of the Bank will achieve the mission of the Bank consistent with part 1265 of this chapter. Specifically, each Bank's strategic business plan shall:

(1) Enumerate operating goals and objectives for each major business activity and for all new business activities, which must include plans for maximizing activities that further the Bank's housing finance and community lending mission, consistent with part 1265 of this chapter;

(2) Discuss how the Bank will address credit needs and market opportunities identified through ongoing market research and consultations with members, associates, and public and private organizations;

(3) Establish quantitative performance goals for Bank products related to multi-family housing, small business, small farm and small agri-business lending;

(4) Describe any proposed new business activities or enhancements of existing activities; and

(5) Be supported by appropriate and timely research and analysis of relevant market developments and member and associate demand for Bank products and services.

(b) *Review and monitoring.* Each Bank's board of directors shall:

(1) Review the Bank's strategic business plan at least annually;

(2) Re-adopt the Bank's strategic business plan, including interim amendments, not less often than every three years; and

(3) Establish management reporting requirements and monitor implementation of the strategic business plan and the operating goals and objectives contained therein.

(c) *Report to FHFA.* Each Bank shall submit to FHFA annually a report analyzing and describing the Bank's performance in achieving the goals described in paragraph (a)(3) of this section.

§ 1239.32 Internal control system.

(a) *Establishment and maintenance.* (1) Each Bank shall establish and maintain an effective internal control system that addresses:

(i) The efficiency and effectiveness of Bank activities;

(ii) The safeguarding of Bank assets;

(iii) The reliability, completeness, and timely reporting of financial and management information, and transparency of such information to the Bank's board of directors and to FHFA; and

(iv) Compliance with applicable laws, regulations, policies, supervisory determinations, and directives of the Bank's board of directors and senior management.

(2) Ongoing internal control activities necessary to maintain the internal control system required under paragraph (a)(1) of this section shall include, but are not limited to:

(i) Top level reviews by the Bank's board of directors and senior management, including review of financial presentations and performance reports;

(ii) Activity controls, including review of standard performance and exception reports by department-level management on an appropriate periodic basis;

(iii) Physical and procedural controls to safeguard, and prevent the unauthorized use of, assets;

(iv) Monitoring for compliance with the risk tolerance limits set forth in the Bank's risk management policy;

(v) Any required approvals and authorizations for specific activities; and

(vi) Any required verifications and reconciliations for specific activities.

(b) *Internal control responsibilities of Banks' boards of directors.* Each Bank's board of directors shall ensure that the internal control system required under paragraph (a)(1) of this section is established and maintained, and shall oversee senior management's implementation of such a system on an ongoing basis, by:

(1) Conducting periodic discussions with senior management regarding the effectiveness of the internal control system;

(2) Ensuring that an internal audit of the internal control system is performed annually and that such annual audit is reasonably designed to be effective and comprehensive;

(3) Requiring that internal control deficiencies be reported to the Bank's board of directors in a timely manner and that such deficiencies are addressed promptly;

(4) Conducting a timely review of evaluations of the effectiveness of the internal control system made by internal auditors, external auditors, and FHFA examiners;

(5) Directing senior management to address promptly and effectively recommendations and concerns expressed by internal auditors, external auditors, and FHFA examiners regarding weaknesses in the internal control system;

(6) Reporting any internal control deficiencies found, and the corrective action taken, to FHFA in a timely manner;

(7) Establishing, documenting, and communicating an organizational structure that clearly shows lines of authority within the Bank, provides for effective communication throughout the Bank, and ensures that there are no gaps in the lines of authority;

(8) Reviewing all delegations of authority to specific personnel or committees and requiring that such delegations state the extent of the authority and responsibilities delegated; and

(9) Establishing reporting requirements, including specifying the nature and frequency of reports it receives.

(c) *Internal control responsibilities of Banks' senior management.* Each Bank's

senior management shall be responsible for carrying out the directives of the Bank's board of directors, including the establishment, implementation, and maintenance of the internal control system required under paragraph (a)(1) of this section, by:

(1) Establishing, implementing, and effectively communicating to Bank personnel policies and procedures that are adequate to ensure that internal control activities necessary to maintain an effective internal control system, including the activities enumerated in paragraph (a)(2) of this section, are an integral part of the daily functions of all Bank personnel;

(2) Ensuring that all Bank personnel fully understand and comply with all policies, procedures, and legal requirements applicable to their positions and responsibilities;

(3) Ensuring that there is appropriate segregation of duties among Bank personnel and that personnel are not assigned conflicting responsibilities;

(4) Establishing effective paths of communication upward, downward, and across the organization in order to ensure that Bank personnel receive necessary and appropriate information, including:

(i) Information relating to the operational policies and procedures of the Bank;

(ii) Information relating to the actual operational performance of the Bank;

(iii) Adequate and comprehensive internal financial, operational, and compliance data; and

(iv) External market information about events and conditions that are relevant to decision making;

(5) Developing and implementing procedures that translate the major business strategies and policies established by the Bank's board of directors into operating standards;

(6) Ensuring adherence to the lines of authority and responsibility established by the Bank's board of directors;

(7) Overseeing the implementation and maintenance of management information and other systems;

(8) Establishing and implementing an effective system to track internal control weaknesses and the actions taken to correct them; and

(9) Monitoring and reporting to the Bank's board of directors the effectiveness of the internal control system on an ongoing basis.

§ 1239.33 Audit committee.

(a) *Establishment.* The audit committee of each Bank established as required by § 1239.5(b) of this chapter, shall be consistent with the requirements set forth in this section.

(b) *Composition.* (1) The audit committee shall comprise five or more persons drawn from the Bank's board of directors, each of whom shall meet the criteria of independence set forth in paragraph (c) of this section.

(2) The audit committee shall include a balance of representatives of:

(i) Community financial institutions and other members; and

(ii) Independent and member directors of the Bank.

(3) The terms of audit committee members shall be appropriately staggered so as to provide for continuity of service.

(4) At least one member of the audit committee shall have extensive accounting or related financial management experience.

(c) *Independence.* Any member of the Bank's board of directors shall be considered to be sufficiently independent to serve as a member of the audit committee if that director does not have a disqualifying relationship with the Bank or its management that would interfere with the exercise of that director's independent judgment. Such disqualifying relationships include, but are not limited to:

(1) Being employed by the Bank in the current year or any of the past five years;

(2) Accepting any compensation from the Bank other than compensation for service as a board director;

(3) Serving or having served in any of the past five years as a consultant, advisor, promoter, underwriter, or legal counsel of or to the Bank; or

(4) Being an immediate family member of an individual who is, or has been in any of the past five years, employed by the Bank as an executive officer.

(d) *Charter.* (1) The audit committee and the board of directors of each Bank shall:

(i) Review, and assess the adequacy of, the Bank's audit committee charter on an annual basis;

(ii) Amend the audit committee charter as appropriate; and

(iii) Re-adopt and re-approve, respectively, the Bank's audit committee charter not less often than every three years.

(2) Each Bank's audit committee charter shall:

(i) Provide that the audit committee has the responsibility to select, evaluate and, where appropriate, replace the internal auditor and that the internal auditor may be removed only with the approval of the audit committee;

(ii) Provide that the internal auditor shall report directly to the audit committee on substantive matters and that the internal auditor is ultimately accountable to the audit committee and board of directors; and

(iii) Provide that both the internal auditor and the external auditor shall have unrestricted access to the audit committee without the need for any prior management knowledge or approval.

(e) *Duties.* Each Bank's audit committee shall have the duty to:

(1) Direct senior management to maintain the reliability and integrity of the accounting policies and financial reporting and disclosure practices of the Bank;

(2) Review the basis for the Bank's financial statements and the external auditor's opinion rendered with respect to such financial statements (including the nature and extent of any significant changes in accounting principles or the application therein) and ensure that policies are in place that are reasonably designed to achieve disclosure and transparency regarding the Bank's true financial performance and governance practices;

(3) Oversee the internal audit function by:

(i) Reviewing the scope of audit services required, significant accounting policies, significant risks and exposures, audit activities, and audit findings;

(ii) Assessing the performance and determining the compensation of the internal auditor; and

(iii) Reviewing and approving the internal auditor's work plan.

(4) Oversee the external audit function by:

(i) Approving the external auditor's annual engagement letter;

(ii) Reviewing the performance of the external auditor; and

(iii) Making recommendations to the Bank's board of directors regarding the appointment, renewal, or termination of the external auditor;

(5) Provide an independent, direct channel of communication between the Bank's board of directors and the internal and external auditors;

(6) Conduct or authorize investigations into any matters within the audit committee's scope of responsibilities;

(7) Ensure that senior management has established and is maintaining an adequate internal control system within the Bank by:

(i) Reviewing the Bank's internal control system and the resolution of identified material weaknesses and significant deficiencies in the internal control system, including the prevention or detection of management override or compromise of the internal control system; and

(ii) Reviewing the programs and policies of the Bank designed to ensure compliance with applicable laws, regulations and policies, and monitoring the results of these compliance efforts;

(8) Review the policies and procedures established by senior management to assess and monitor implementation of the Bank's strategic business plan and the operating goals and objectives contained therein; and

(9) Report periodically its findings to the Bank's board of directors.

(f) *Meetings.* The audit committee shall prepare written minutes of each audit committee meeting.

§ 1239.34 Dividends.

A Bank's board of directors may not declare or pay a dividend based on projected or anticipated earnings and may not declare or pay a dividend if the par value of the Bank's stock is impaired or is projected to become impaired after paying such dividend.

CHAPTER XVII—OFFICE OF FEDERAL HOUSING ENTERPRISE OVERSIGHT, DEPARTMENT OF HOUSING AND URBAN DEVELOPMENT

Subchapter C—Safety and Soundness

PART 1710—[REMOVED]

■ 6. Remove part 1710.

PART 1720—[REMOVED]

■ 7. Remove part 1720.

Dated: January 15, 2014.

Melvin L. Watt,

Director, Federal Housing Finance Agency.

[FR Doc. 2014–01173 Filed 1–27–14; 8:45 am]

BILLING CODE 8070–01–P

DEPARTMENT OF JUSTICE

Drug Enforcement Administration

21 CFR Part 1308

[Docket No. DEA–386]

Schedules of Controlled Substances: Temporary Placement of 10 Synthetic Cathinones into Schedule I

AGENCY: Drug Enforcement Administration, Department of Justice.

ACTION: Notice of Intent.

SUMMARY: The Deputy Administrator of the Drug Enforcement Administration (DEA) is issuing this notice of intent to temporarily schedule 10 synthetic cathinones into schedule I pursuant to the temporary scheduling provisions of the Controlled Substances Act (CSA). The 10 substances are: (1) 4-methyl-*N*-ethylcathinone (''4-MEC''); (2) 4-methyl-*alpha*-pyrrolidinopropiophenone (''4-MePPP''); (3) alpha-pyrrolidinopentiophenone (''α-PVP''); (4) 1-(1,3-benzodioxol-5-yl)-2-(methylamino)butan-1-one (''butylone''); (5) 2-(methylamino)-1-phenylpentan-1-one (''pentedrone''); (6) 1-(1,3-benzodioxol-5-yl)-2-(methylamino)pentan-1-one (''pentylone''); (7) 4-fluoro-*N*-methylcathinone (''4-FMC''); (8) 3-fluoro-*N*-methylcathinone (''3-FMC''); (9) 1-(naphthalen-2-yl)-2-(pyrrolidin-1-yl)pentan-1-one (''naphyrone''); and (10) alpha-pyrrolidinobutiophenone (''α-PBP''). This action is based on a finding by the Deputy Administrator that the placement of these synthetic cathinones into schedule I of the CSA is necessary to avoid an imminent hazard to the public safety. Any final order will be published in the **Federal Register** and may not be effective prior to February 27, 2014. Any final order will impose the administrative, civil, and criminal sanctions and regulatory controls applicable to schedule I substances under the CSA on the manufacture, distribution, possession, importation, exportation, research, and conduct of instructional activities of these synthetic cathinones.

DATES: January 28, 2014.

FOR FURTHER INFORMATION CONTACT: Ruth A. Carter, Acting Chief, Policy Evaluation and Analysis Section, Office of Diversion Control, Drug Enforcement Administration; Mailing Address: 8701 Morrissette Drive, Springfield, Virginia 22152, Telephone (202) 598–6812.

SUPPLEMENTARY INFORMATION:

Background

Section 201 of the CSA, 21 U.S.C. 811, provides the Attorney General with the authority to temporarily place a substance into schedule I of the CSA for two years without regard to the requirements of 21 U.S.C. 811(b) if he finds that such action is necessary to avoid imminent hazard to the public safety. 21 U.S.C. 811(h). In addition, if proceedings to control a substance are initiated under 21 U.S.C. 811(a)(1), the Attorney General may extend the temporary scheduling for up to one year. 21 U.S.C. 811(h)(2).

Where the necessary findings are made, a substance may be temporarily scheduled if it is not listed in any other schedule under section 202 of the CSA, 21 U.S.C. 812, or if there is no exemption or approval in effect for the substance under section 505 of the Federal Food, Drug, and Cosmetic Act (FDCA), 21 U.S.C. 355. 21 U.S.C. 811(h)(1); 21 CFR part 1308. The Attorney General has delegated his authority under 21 U.S.C. 811 to the Administrator of the DEA, who in turn has delegated her authority to the Deputy Administrator of the DEA. 28 CFR 0.100, 0.104, Appendix to Subpart R of Part 0, Sec. 12.

Section 201(h)(4) of the CSA (21 U.S.C. 811(h)(4)) requires the Deputy Administrator to notify the Secretary of the Department of Health and Human Services (HHS) of his intention to temporarily place a substance into schedule I of the CSA.[1] As 4-MEC, 4-MePPP, α-PVP, butylone, pentedrone, pentylone, 4-FMC, 3-FMC, naphyrone, and α-PBP are not currently listed in any schedule under the CSA, the DEA believes that the conditions of 21 U.S.C. 811(h)(1) have been satisfied. Any comments submitted by the Assistant Secretary in response to the notice transmitted to the Assistant Secretary on November 7, 2013, shall be taken into consideration before a final order is published. 21 U.S.C. 811(h)(4).

To make a finding that placing a substance temporarily into schedule I of the CSA is necessary to avoid an imminent hazard to the public safety, the Deputy Administrator is required to consider three of the eight factors set forth in section 201(c) of the CSA, 21 U.S.C. 811(c): the substance's history and current pattern of abuse; the scope, duration, and significance of abuse; and what, if any, risk there is to the public health. 21 U.S.C. 811(h)(3). Consideration of these factors includes actual abuse, diversion from legitimate channels, and clandestine importation, manufacture, or distribution. 21 U.S.C. 811(h)(3).

A substance meeting the statutory requirements for temporary scheduling may only be placed in schedule I. 21 U.S.C. 811(h)(1). Substances in schedule I are those that have a high potential for abuse, no currently accepted medical use in treatment in the United States, and a lack of accepted safety for use under medical supervision. 21 U.S.C. 812(b)(1). Available data and information for 4-MEC, 4-MePPP, α-PVP, butylone, pentedrone, pentylone, 4-FMC, 3-FMC, naphyrone, and α-PBP indicate that these 10 synthetic

[1] Because the Secretary of the HHS has delegated to the Assistant Secretary for Health of the HHS the authority to make domestic drug scheduling recommendations, for purposes of this Notice of Intent, all subsequent references to ''Secretary'' have been replaced with ''Assistant Secretary.'' As set forth in a memorandum of understanding entered into by HHS, the Food and Drug Administration (FDA), and the National Institute on Drug Abuse (NIDA), FDA acts as the lead agency within HHS in carrying out the Assistant Secretary's scheduling responsibilities under the CSA, with the concurrence of NIDA. 50 FR 9518, Mar. 8, 1985.

cathinones have a high potential for abuse, no currently accepted medical use in treatment in the United States, and a lack of accepted safety for use under medical supervision.

Synthetic Cathinones

Synthetic cathinones are β-keto-phenethylamine derivatives of the larger phenethylamine structural class (amphetamines, cathinones, 2C compounds, aminoindanes, etc.). Synthetic cathinones share a core phenethylamine structure with substitutions at the β-position, α-position, phenyl ring, or nitrogen atom. The addition of a beta-keto (β-keto) substituent (i.e., carbonyl (C=O)) to the phenethylamine core structure along with substitutions on the alpha (α) carbon (C) atom or the nitrogen (N) atom produce a variety of substances called cathinones or synthetic cathinones. Many synthetic cathinones produce pharmacological effects substantially similar to the schedule I substances cathinone, methcathinone, and 3,4-methylenedioxymethamphetamine (MDMA) and schedule II stimulants amphetamine, methamphetamine, and cocaine. 4-MEC, 4-MePPP, α-PVP, butylone, pentedrone, pentylone, 4-FMC, 3-FMC, naphyrone, and α-PBP are synthetic cathinones and are structurally and pharmacologically similar to amphetamine, MDMA, cathinone, and other related substances. Accordingly, these synthetic cathinone substances share substantial similarities with schedule I and schedule II substances, including similarities with respect to desired and adverse effects. In general, desired effects reported by abusers of synthetic cathinone substances include euphoria, sense of well-being, increased sociability, energy, empathy, increased alertness, and improved concentration and focus. Abusers also report experiencing unwanted effects such as tremor, vomiting, agitation, sweating, fever, and chest pain. Other adverse or toxic effects that have been reported with the abuse of synthetic cathinones include tachycardia, hypertension, hyperthermia, mydriasis, rhabdomyolysis, hyponatremia, seizures, altered mental status (paranoia, hallucinations, delusions), and even death. These synthetic cathinone substances have no known medical use in the United States but evidence demonstrates that these substances are being abused by individuals. There have been documented reports of emergency room admissions and deaths associated with the abuse of synthetic cathinone substances.

Products that contain synthetic cathinones have been falsely marketed as ''research chemicals,'' ''plant fertilizer,'' ''jewelry cleaner,'' ''stain remover,'' ''plant food or fertilizer,'' ''insect repellants,'' or ''bath salts.'' These products are sold at smoke shops, head shops, convenience stores, adult book stores, and gas stations and can also be purchased on the Internet. These substances are commonly encountered in the form of powders, crystals, resins, tablets, and capsules.

From January 2010 through November 2013, according to the System to Retrieve Information from Drug Evidence [2] (STRIDE) data, there are 374 exhibits for 4-MEC; 122 exhibits for 4-MePPP; 659 exhibits for α-PVP; 74 exhibits for butylone; 288 exhibits for pentedrone; 119 exhibits for pentylone; 37 exhibits for FMC [3]; 22 exhibits for naphyrone; and 37 exhibits for α-PBP. From January 2010 through November 2013, the National Forensic Laboratory Information System [4] (NFLIS) registered 8,807 reports containing these synthetic cathinones (4-MEC—1,876 reports; 4-MePPP—288 reports; α-PVP —4,330 reports; butylone—486 reports; pentedrone—1,160 reports; pentylone—235 reports; FMC [5]—291 reports; naphyrone—43 reports; α-PBP —98 reports) across 42 states.

Factor 4. History and Current Pattern of Abuse

4-MEC, 4-MePPP, α-PVP, butylone, pentedrone, pentylone, 4-FMC, 3-FMC, naphyrone, and α-PBP are synthetic cathinones that emerged on the United States' illicit drug market around the time of the temporary scheduling of mephedrone, MDPV, and methylone on October 21, 2011. 76 FR 65371. Mephedrone and MDPV were permanently placed in schedule I on July 9, 2012 by the Food and Drug Administration Safety and Innovation Act (Pub. L. 112–144), and methylone was permanently placed in schedule I by the DEA on April 12, 2013 (78 FR 21818). These synthetic cathinone substances, like the schedule I synthetic cathinones (mephedrone, methylone, and MDPV), are promoted as being a ''legal'' alternative to cocaine, methamphetamine, and MDMA. Products that contain 4-MEC, 4-MePPP, α-PVP, butylone, pentedrone, pentylone, 4-FMC, 3-FMC, naphyrone, and α-PBP are falsely marketed as ''research chemicals,'' ''plant fertilizer,'' ''jewelry cleaner,'' ''stain remover,'' ''plant food or fertilizer,'' ''insect repellants,'' or ''bath salts'' and are sold at smoke shops, head shops, convenience stores, adult book stores, and gas stations, and can also be purchased on the Internet under a variety of product names (e.g., ''White Dove,'' ''Explosion,'' ''Tranquility''). They are commonly encountered in the form of powders, crystals, resins, tablets, and capsules. The packages of these commercial products usually contain the warning ''not for human consumption.''

Information from published scientific studies indicates that the most common routes of administration for synthetic cathinone substances is ingestion by swallowing capsules or tablets or nasal insufflation by snorting the powder. Other methods of intake include intravenous or intramuscular injection, rectal administration, and swallowing via ingestion by ''bombing'' (wrapping a dose of powder in paper).

There is evidence that these synthetic cathinone substances are abused alone or ingested with other substances including other synthetic cathinones, pharmaceutical agents, or other recreational substances. Substances found in combination with 4-MEC, 4-MePPP, α-PVP, butylone, pentedrone, pentylone, 4-FMC, or naphyrone are: other synthetic cathinones (e.g., methylone and MDPV), common cutting agents (e.g., lidocaine, caffeine, lignocaine, ephedrine, etc.), or other recreational substances.

Evidence from poison centers and published reports suggest that the primary users of synthetic cathinones are youths and young adults. The Texas Poison Center Network reported adolescents (12 to 19-years-old) and young adults (mean age was 30-years-old) in 2010 and 2011 as the main callers of synthetic cathinone exposures. A survey of college students reported that the lifetime use (used at least once) of synthetic cathinones among college students (at a large Southeastern U.S. university) is 25 out of 2,349 students surveyed. A national survey on drug use by the Monitoring the Future (MTF) [6]

[2] STRIDE is a database of drug exhibits sent to DEA laboratories for analysis. Exhibits from the database are from the DEA, other Federal agencies, and some local law enforcement agencies. STRIDE data was queried on 12/20/2013 by date submitted to Federal forensic laboratories.

[3] FMC refers to both 3-FMC and 4-FMC.

[4] NFLIS is a national drug forensic laboratory reporting system that systematically collects results from drug chemistry analyses conducted by state and local forensic laboratories across the country. NFLIS state and local forensic drug reports were queried on 12/20/2013.

[5] FMC refers to both 3-FMC and 4-FMC.

[6] MTF is a research program conducted by the University of Michigan's Institute for Social Research under grants from NIDA. MTF tracks drug use trends among American adolescents in the 8th, 10th, and 12th grades and high school graduates into adulthood by conducting nationwide surveys.

research program showed that 0.2% of full-time college students (one to four years past high school) used synthetic cathinone substances in 2012. Similarly, the use of synthetic cathinone substances among 8th, 10th, and 12th grade students and young adults (non-college peers aged 19 to 28-years-old) was 0.8%, 0.6%, 1.3%, and 0.8%, respectively.

Factor 5. Scope, Duration and Significance of Abuse

4-MEC, 4-MePPP, α-PVP, butylone, pentedrone, pentylone, 4-FMC, 3-FMC, naphyrone, and α-PBP, like mephedrone, methylone, and MDPV, are popular recreational drugs. Evidence that these synthetic cathinone substances are being abused is indicated by law enforcement encounters of these substances. Forensic laboratories have analyzed drug exhibits received from state, local, and Federal law enforcement agencies and confirmed the presence of 4-MEC, 4-MePPP, α-PVP, butylone, pentedrone, pentylone, 4-FMC, 3-FMC, naphyrone, or α-PBP in these exhibits.

STRIDE registered 1,732 drug exhibits pertaining to the trafficking, distribution and abuse of 4-MEC, 4-MePPP, α-PVP, butylone, pentedrone, pentylone, 4-FMC, 3-FMC, naphyrone, and α-PBP from January 2010 to November 2013.[7] Specifically, in 2010, STRIDE contains four reports related to 4-MEC and none for the other nine substances. However, in 2011, there were 205 reports related to these 10 substances, and in 2012, there were 1,302 reports. From January to November 2013 there were 221 reports (excluding naphyrone).

NFLIS registered over 8,000 reports from state and local forensic laboratories identifying these substances in drug-related exhibits for the period from January 2010 to November 2013 across 42 states. Specifically, in 2010, NFLIS registered 13 reports from 5 states containing many of these synthetic cathinone substances.[8] In 2011, there were 800 reports from 32 states related to these substances registered in NFLIS, in 2012 there were 5,485 reports from 41 states, and from January to November 2013 there were 2,509 reports from 41 states.

Additionally, large seizures of these substances have occurred by the U.S. Customs and Border Protection (CBP). At selected United States ports of entry, CBP encountered several shipments of products from April 2010 to November 2013 containing these synthetic cathinone substances (4-MEC—78 encounters; 4-MePPP—8 encounters; α-PVP—40 encounters; butylone—21 encounters; pentedrone—18 encounters; pentylone—10 encounters; FMC[9]—13 encounters; naphyrone—3 encounters; α-PBP—11 encounters), thus indicating the appeal of these substances. Most of the shipments of these synthetic cathinones originated overseas and were destined for delivery throughout the United States to states including Arizona, Arkansas, California, Colorado, Florida, Hawaii, Idaho, Illinois, Michigan, Missouri, Nebraska, Nevada, New Jersey, New Mexico, Oklahoma, Oregon, Texas, Virginia, Washington, and Wyoming.

Concerns over the abuse of these synthetic cathinone substances have prompted many states to regulate them. More than half of the states in the United States have emergency scheduled or enacted legislation placing regulatory controls on some or many of the 10 synthetic cathinones that are the subject of this notice of intent. In addition, due to the use of synthetic cathinones by service members, the U.S. Armed Forces has prohibited the use of synthetic cathinones for intoxication purposes.

Factor 6. What, if Any, Risk There is to the Public Health

Available evidence on the overall public health risks associated with the use of synthetic cathinones indicates that 4-MEC, 4-MePPP, α-PVP, butylone, pentedrone, pentylone, 4-FMC, 3-FMC, naphyrone, and α-PBP can cause acute health problems leading to emergency department admissions, violent behaviors causing harm to self or others, or death. For example, individuals have presented at emergency departments following exposure to some of these synthetic cathinone substances or products containing them. In addition, products containing these synthetic cathinone substances often do not bear labeling information regarding their ingredients and, if they do, they may not list the active synthetic ingredients or identify the health risks and potential hazards associated with these products. Acute effects of these substances are those typical of sympathomimetic agents (e.g., cocaine, methamphetamine, and amphetamine) and include, among other effects, tachycardia, headache, bruxism (teeth grinding), palpitations, agitation, anxiety, insomnia, mydriasis, tremor, fever or sweating, and hypertension. Other effects, with public health risk implications, that have been reported from the use of synthetic cathinone substances include vomiting, palpitations, chest pain, hyperthermia, rhabdomyolysis, hyponatremia, seizures, and altered mental status (paranoia, hallucinations, and delusions). Finally, the possibility of death for individuals abusing 4-MEC, 4-MePPP, α-PVP, butylone, pentedrone, pentylone, 4-FMC, 3-FMC, naphyrone, and α-PBP indicates that these substances are serious public health threats. Some of these synthetic cathinone substances have been directly or indirectly implicated in the death of individuals. For example, a 24-year-old female died after ingesting two capsules of what she believed to be ''Ecstasy'' but was subsequently confirmed to be a mixture of methylone and butylone. The cause of death determined by the medical examiner was serotonin syndrome secondary to methylone and butylone ingestion. A 21-year-old male who ingested butylone for suicidal intentions died after he developed seizures and suffered a cardiac and respiratory arrest. The cause of death was reported as multi-organ failure resulting from malignant serotonin syndrome.

Finding of Necessity of Schedule I Placement To Avoid Imminent Hazard to Public Safety

Based on the above summarized data and information, the continued uncontrolled manufacture, distribution, importation, exportation, and abuse of 4-MEC, 4-MePPP, α-PVP, butylone, pentedrone, pentylone, 4-FMC, 3-FMC, naphyrone, and α-PBP pose an imminent hazard to the public safety. The DEA is not aware of any currently accepted medical uses for these synthetic cathinones in the United States. A substance meeting the statutory requirements for temporary scheduling, 21 U.S.C. 811(h)(1), may only be placed in schedule I. Substances in schedule I are those that have a high potential for abuse, no currently accepted medical use in treatment in the United States, and a lack of accepted safety for use under medical supervision. Available data and information for 4-MEC, 4-MePPP, α-PVP, butylone, pentedrone, pentylone, 4-FMC, 3-FMC, naphyrone, and α-PBP indicate that these 10 synthetic cathinones have a high potential for abuse, no currently accepted medical use in treatment in the United States, and a lack of accepted safety for use under medical supervision. As required by section 201(h)(4) of the CSA, 21 U.S.C. 811(h), the Deputy Administrator through a letter dated November 7, 2013, notified the Assistant Secretary of

[7] STRIDE data was queried on 12/20/2013 by date submitted to Federal forensic laboratories.

[8] NFLIS state and local forensic drug reports were queried on 12/20/2013.

[9] FMC refers to both 3-FMC and 4-FMC.

the DEA's intention to temporarily place these ten synthetic cathinones in schedule I.

Conclusion

This notice of intent initiates an expedited temporary scheduling action and provides the 30-day notice pursuant to section 201(h) of the CSA, 21 U.S.C. 811(h). In accordance with the provisions of section 201(h) of the CSA, 21 U.S.C. 811(h), the Deputy Administrator considered available data and information, herein set forth the grounds for his determination that it is necessary to temporarily schedule 10 synthetic cathinones, 4-methyl-*N*-ethylcathinone (4-MEC), 4-methyl-α-pyrrolidinopropiophenone (4-MePPP), alpha-pyrrolidinopentiophenone (α-PVP), 1-(1,3-benzodioxol-5-yl)-2-(methylamino)butan-1-one (butylone), 2-(methylamino)-1-phenylpentan-1-one (pentedrone), 1-(1,3-benzodioxol-5-yl)-2-(methylamino)pentan-1-one (pentylone), 4-fluoro-*N*-methylcathinone (4-FMC), 3-fluoro-*N*-methylcathinone (3-FMC), naphthylpyrovalerone (naphyrone), and alpha-pyrrolidinobutiophenone (α-PBP), in schedule I of the CSA, and finds that placement of these synthetic cathinones into schedule I of the CSA is warranted in order to avoid an imminent hazard to the public safety.

Because the Deputy Administrator hereby finds that it is necessary to temporarily place these synthetic cathinones into schedule I to avoid an imminent hazard to the public safety, any subsequent final order temporarily scheduling these substances will be effective on the date of publication in the **Federal Register**, and will be in effect for a period of two years, with a possible extension of one additional year, pending completion of the regular (permanent) scheduling process. 21 U.S.C. 811(h)(1) and (2). It is the intention of the Deputy Administrator to issue such a final order as soon as possible after the expiration of 30 days from the date of publication of this notice. 4-MEC, 4-MePPP, α-PVP, butylone, pentedrone, pentylone, 4-FMC, 3-FMC, naphyrone, and α-PBP will then be subject to the regulatory controls and administrative, civil, and criminal sanctions applicable to the manufacture, distribution, possession, importation, exportation, research, and conduct of instructional activities of a schedule I controlled substance.

The CSA sets forth specific criteria for scheduling a drug or other substance. Regular scheduling actions in accordance with 21 U.S.C. 811(a) are subject to formal rulemaking procedures done ''on the record after opportunity for a hearing'' conducted pursuant to the provisions of 5 U.S.C. 556 and 557. 21 U.S.C. 811. The regular scheduling process of formal rulemaking affords interested parties with appropriate process and the government with any additional relevant information needed to make a determination. Final decisions that conclude the regular scheduling process of formal rulemaking are subject to judicial review. 21 U.S.C. 877. Temporary scheduling orders are not subject to judicial review. 21 U.S.C. 811(h)(6).

Regulatory Matters

Section 201(h) of the CSA, 21 U.S.C. 811(h), provides for an expedited temporary scheduling action where such action is necessary to avoid an imminent hazard to the public safety. As provided in this subsection, the Attorney General may, by order, schedule a substance in schedule I on a temporary basis. Such an order may not be issued before the expiration of 30 days from (1) the publication of a notice in the **Federal Register** of the intention to issue such order and the grounds upon which such order is to be issued, and (2) the date that notice of the proposed temporary scheduling order is transmitted to the Assistant Secretary. 21 U.S.C. 811(h)(1).

Inasmuch as section 201(h) of the CSA directs that temporary scheduling actions be issued by order and sets forth the procedures by which such orders are to be issued, the DEA believes that the notice and comment requirements of section 553 of the Administrative Procedure Act (APA), 5 U.S.C. 553, do not apply to this notice of intent. In the alternative, even assuming that this notice of intent might be subject to section 553 of the APA, the Deputy Administrator finds that there is good cause to forgo the notice and comment requirements of section 553, as any further delays in the process for issuance of temporary scheduling orders would be impracticable and contrary to the public interest in view of the manifest urgency to avoid an imminent hazard to the public safety.

Although the DEA believes this notice of intent to issue a temporary scheduling order is not subject to the notice and comment requirements of section 553 of the APA, the DEA notes that in accordance with 21 U.S.C. 811(h)(4), the Deputy Administrator will take into consideration any comments submitted by the Assistant Secretary with regard to the proposed temporary scheduling order.

Further, the DEA believes that this temporary scheduling action is not a ''rule'' as defined by 5 U.S.C. 601(2), and, accordingly, is not subject to the requirements of the Regulatory Flexibility Act (RFA). The requirements for the preparation of an initial regulatory flexibility analysis in 5 U.S.C. 603(a) are not applicable where, as here, the DEA is not required by section 553 of the APA or any other law to publish a general notice of proposed rulemaking. Additionally, this action is not a significant regulatory action as defined by Executive Order 12866 (Regulatory Planning and Review), section 3(f), and, accordingly, this action has not been reviewed by the Office of Management and Budget (OMB).

This action will not have substantial direct effects on the States, on the relationship between the national government and the States, or on the distribution of power and responsibilities among the various levels of government. Therefore, in accordance with Executive Order 13132 (Federalism) it is determined that this action does not have sufficient federalism implications to warrant the preparation of a Federalism Assessment.

List of Subjects in 21 CFR Part 1308

Administrative practice and procedure, Drug traffic control, Reporting and recordkeeping requirements.

Under the authority vested in the Attorney General by section 201(h) of the CSA, 21 U.S.C. 811(h), and delegated to the Deputy Administrator of the DEA by Department of Justice regulations, the Deputy Administrator hereby intends to order that 21 CFR Part 1308 be amended as follows:

PART 1308—SCHEDULES OF CONTROLLED SUBSTANCES

■ 1. The authority citation for Part 1308 continues to read as follows:

Authority: 21 U.S.C. 811, 812, 871(b), unless otherwise noted.

■ 2. Section 1308.11 is amended by adding new paragraphs (h)(19), (20), (21), (22), (23), (24), (25), (26), (27), and (28) to read as follows:

§ 1308.11 Schedule I.

* * * * *

(h) * * *

(19) 4-methyl-*N*-ethylcathinone, its optical, positional, and geometric isomers, salts and salts of isomers—1249

(Other names: 4-MEC; 2-(ethylamino)-1-(4-methylphenyl)propan-1-one)

(20) 4-methyl-*alpha*-pyrrolidinopropiophenone, its optical,

positional, and geometric isomers, salts and salts of isomers—7498

(Other names: 4-MePPP; MePPP; 4-methyl-α-pyrrolidinopropiophenone; 1-(4-methylphenyl)-2-(pyrrolidin-1-yl)-propan-1-one)

(21) *alpha*-pyrrolidinopentiophenone, its optical, positional, and geometric isomers, salts and salts of isomers—7545

(Other names: α-PVP; α-pyrrolidinovalerophenone; 1-phenyl-2-(pyrrolidin-1-yl)pentan-1-one)

(22) butylone, its optical, positional, and geometric isomers, salts and salts of isomers—7541

(Other names: bk-MBDB; 1-(1,3-benzodioxol-5-yl)-2-(methylamino)butan-1-one)

(23) pentedrone, its optical, positional, and geometric isomers, salts and salts of isomers—1246

(Other names: α-methylaminovalerophenone; 2-(methylamino)-1-phenylpentan-1-one)

(24) pentylone, its optical, positional, and geometric isomers, salts and salts of isomers—7542

(Other names: bk-MBDP; 1-(1,3-benzodioxol-5-yl)-2-(methylamino)pentan-1-one)

(25) 4-fluoro-*N*-methylcathinone, its optical, positional, and geometric isomers, salts and salts of isomers—1238

(Other names: 4-FMC; flephedrone; 1-(4-fluorophenyl)-2-(methylamino)propan-1-one)

(26) 3-fluoro-*N*-methylcathinone, its optical, positional, and geometric isomers, salts and salts of isomers—1233

(Other names: 3-FMC; 1-(3-fluorophenyl)-2-(methylamino)propan-1-one)

(27) naphyrone, its optical, positional, and geometric isomers, salts and salts of isomers—1258

(Other names: naphthylpyrovalerone; 1-(naphthalen-2-yl)-2-(pyrrolidin-1-yl)pentan-1-one)

(28) *alpha*-pyrrolidinobutiophenone, its optical, positional, and geometric isomers, salts and salts of isomers—7546

(Other names: α-PBP; 1-phenyl-2-(pyrrolidin-1-yl)butan-1-one)

Dated: January 15, 2014.

Thomas M. Harrigan,

Deputy Administrator.

[FR Doc. 2014–01172 Filed 1–27–14; 8:45 am]

BILLING CODE 4410–09–P

DEPARTMENT OF TRANSPORTATION

Saint Lawrence Seaway Development Corporation

33 CFR Part 401

[Docket No. SLSDC–2014–0001]

RIN 2135–AA33

Seaway Regulations and Rules: Periodic Update, Various Categories

AGENCY: Saint Lawrence Seaway Development Corporation, DOT.

ACTION: Notice of proposed rulemaking.

SUMMARY: The Saint Lawrence Seaway Development Corporation (SLSDC) and the St. Lawrence Seaway Management Corporation (SLSMC) of Canada, under international agreement, jointly publish and presently administer the St. Lawrence Seaway Regulations and Rules (Practices and Procedures in Canada) in their respective jurisdictions. Under agreement with the SLSMC, the SLSDC is amending the joint regulations by updating the Seaway Regulations and Rules in various categories. The changes will update the following sections of the Regulations and Rules: Condition of Vessels; Preclearance and Security for Tolls; Tolls Assessment and Payment; Seaway Navigation; Dangerous Cargo; Toll Assessment and Payment; and, Information and Reports. These amendments are necessary to take account of updated procedures and will enhance the safety of transits through the Seaway. Many of the amendments are merely editorial or for clarification of existing requirements.

DATES: Comments are due February 27, 2014.

ADDRESSES: Submit comments to *http://www.Regulations.gov;* or the Docket Management Facility; U.S. Department of Transportation, 1200 New Jersey Avenue SE., West Building Ground Floor, Room W12–140, Washington, DC 20590–001.

Docket: For access to the docket to read background documents or comments received, go to *http://www.Regulations.gov;* or in person at the Docket Management Facility; U.S. Department of Transportation, 1200 New Jersey Avenue SE., West Building Ground Floor, Room W12–140, Washington, DC 20590–001, between 9 a.m. and 5 p.m., Monday through Friday, except Federal Holidays.

FOR FURTHER INFORMATION CONTACT: Carrie Mann Lavigne, Chief Counsel, Saint Lawrence Seaway Development Corporation, 180 Andrews Street, Massena, New York 13662; 315/764–3200.

SUPPLEMENTARY INFORMATION: The Saint Lawrence Seaway Development Corporation (SLSDC) and the St. Lawrence Seaway Management Corporation (SLSMC) of Canada, under international agreement, jointly publish and presently administer the St. Lawrence Seaway Regulations and Rules (Practices and Procedures in Canada) in their respective jurisdictions. Under agreement with the SLSMC, the SLSDC is amending the joint regulations by updating the Regulations and Rules in various categories. The changes will update the following sections of the Regulations and Rules: Condition of Vessels; Preclearance and Security for Tolls; Tolls Assessment and Payment; Seaway Navigation; Dangerous Cargo; Toll Assessment and Payment; and, Information and Reports. These updates are necessary to take account of updated procedures which will enhance the safety of transits through the Seaway. Many of these changes are to clarify existing requirements in the regulations. Where new requirements or regulations are made, an explanation for such a change is provided below.

Regulatory Notices: Privacy Act: Anyone is able to search the electronic form of all comments received into any of our dockets by the name of the individual submitting the comment (or signing the comment, if submitted on behalf of an association, business, labor union, etc.). You may review DOT's complete Privacy Act Statement in the **Federal Register** published on April 11, 2000 (Volume 65, Number 70; Pages 19477–78) or you may visit *http://www.Regulations.gov.*

The SLSDC is amending several sections of the Condition of Vessels portion of the joint Seaway regulations. In section 401.9, ''Radio Telephone Equipment'', the two Corporations are proposing to limit the degree of error for gyro and magnetic compasses. Under section 401.10, ''Mooring lines'', the SLSDC is proposing to mandate the use of synthetic lines when using tie-up services at tie-up walls and docks. Currently the use of synthetic lines is optional. For safety purposes in section 401.14, ''Anchor marking buoys'', the SLSDC is proposing to amend the rules to require vessels to ensure that the anchor buoy is secured by a suitable line and ready to be released prior to entering the Seaway.

In the Preclearance and Security for Tolls section, the Seaway Corporations are proposing to amend their joint rules in section 401.22, ''Preclearance of vessels'', to require that past due invoices must be paid prior to transiting the Seaway. In addition, provisions are being proposed that would provide

representatives with the ability to obtain a continuous preclearance status.

Several proposed revisions are being made in the Seaway Navigation portion of the regulations. In section 401.29, ''Maximum Draft,'' the SLSDC is proposing to require vessels to meet a minimum draft requirement. In addition, the two Corporations are proposing to require vessels to be equipped with an operational anchor. A proposal to require mooring lines on deck to be individually attended unless the vessel is equipped with side control is being made in section 401.46, ''Attending lines.''

In the Information and Reports section, a change to section 401.79, ''Advance notice of arrival, vessels requiring inspection'' is being proposed that would require tall ships or vessels of an unusual design to undergo a Seaway yearly inspection.

The other changes to the joint regulations are merely editorial or to clarify existing requirements.

Regulatory Evaluation

This regulation involves a foreign affairs function of the United States and therefore Executive Order 12866 does not apply and evaluation under the Department of Transportation's Regulatory Policies and Procedures is not required.

Regulatory Flexibility Act Determination

I certify that this regulation will not have a significant economic impact on a substantial number of small entities. The St. Lawrence Seaway Regulations and Rules primarily relate to commercial users of the Seaway, the vast majority of whom are foreign vessel operators. Therefore, any resulting costs will be borne mostly by foreign vessels.

Environmental Impact

This regulation does not require an environmental impact statement under the National Environmental Policy Act (49 U.S.C. 4321, et seq.) because it is not a major federal action significantly affecting the quality of the human environment.

Federalism

The Corporation has analyzed this rule under the principles and criteria in Executive Order 13132, dated August 4, 1999, and has determined that this proposal does not have sufficient federalism implications to warrant a Federalism Assessment.

Unfunded Mandates

The Corporation has analyzed this rule under Title II of the Unfunded Mandates Reform Act of 1995 (Pub. L. 104–4, 109 Stat. 48) and determined that it does not impose unfunded mandates on State, local, and tribal governments and the private sector requiring a written statement of economic and regulatory alternatives.

Paperwork Reduction Act

This regulation has been analyzed under the Paperwork Reduction Act of 1995 and does not contain new or modified information collection requirements subject to the Office of Management and Budget review.

List of Subjects in 33 CFR Part 401

Hazardous materials transportation, Navigation (water), Penalties, Radio, Reporting and recordkeeping requirements, Vessels, Waterways.

Accordingly, the Saint Lawrence Seaway Development Corporation proposes to amend 33 CFR Part 401, Regulations and Rules, as follows:

PART 401—SEAWAY REGULATIONS AND RULES

Subpart A—Regulations

■ 1. The authority citation for subpart A of part 401 continues to read as follows:

Authority: 33 U.S.C. 983(a) and 984(a) (4), as amended; 49 CFR 1.52, unless otherwise noted.

■ 2. In § 401.2, redesignate paragraphs (b) through (r) as paragraphs (c) through (s) and add a new paragraph (b) to read as follows:

§ 401.2 Interpretation.

* * * * *

(e) E-business means Web applications on the St. Lawrence Seaway Management Corporation Web site which provides direct electronic transmission of data to complete and submit application forms and transit data;

* * * * *

■ 3. In § 401.9, revise the section heading and add new paragraphs (c) and (d) to read as follows:

§ 401.9 Radio telephone and navigation equipment.

* * * * *

(c) Gyro compass error greater than 2 degrees must be serviced prior to transiting the Seaway, and if noted during a Seaway transit, it must be reported to the nearest Seaway station and the gyro compass must be serviced at the first opportunity.

(d) When magnetic compass error is greater than 5 degrees, the vessel is required to have the compass swung and a new deviation card produced, unless the ''record of deviations'' has been properly maintained and verified.

■ 4. In § 401.10, revise paragraph (c) to read as follows:

§ 401.10 Mooring lines.

* * * * *

(c) Synthetic lines must be used for mooring at approach walls when using tie-up services at tie-up walls and docks within the Seaway.

* * * * *

■ 5. In § 401.13, revise paragraph (b) to read as follows:

§ 401.13 Hand lines.

* * * * *

(b) Be of uniform thickness and have a diameter of not less than 12 mm and not more than 17 mm and a minimum length of 30 m. The ends of the lines shall be back spliced or tapered; and

* * * * *

■ 6 . Revise § 401.14 to read as follows:

§ 401.14 Anchor marking buoys.

(a) Every vessel shall have its anchors cleared and have the anchor marking buoys free to deploy (weak link to hold buoy line on board) with the buoy lines firmly secured to each anchor and ready to be released prior to entering the Seaway.

(b) Every vessel shall deploy the anchor marking buoy when dropping an anchor in Seaway waters.

■ 7. In § 401.19, revise paragraph (a) and paragraph (b)(2) to read as follows:

§ 401.19 Disposal and discharge systems.

(a) Every vessel not equipped with containers for ordure shall be equipped with a sewage disposal system enabling compliance with the Vessel Pollution and Dangerous Chemicals regulations (Canada), the U.S. Clean Water Act and the U.S. River and Harbor Act, and amendments thereto.

(b) * * *

(2) Retained on board in covered, leak-proof containers, until such time as it can be disposed of in accordance with the provisions of the Vessel Pollution and Dangerous Chemicals regulations (Canada), the U.S. Clean Water Act and the U.S. River and Harbor Act, and amendments thereto.

* * * * *

■ 8. In § 401.22, revise paragraphs (b)(2), (b)(3) and add a new paragraph (b)(4) to read as follows:

§ 401.22 Preclearance of vessels.

* * * * *

(b) * * *

(2) A change of representative of the vessel,

(3) A material alteration in the physical characteristics of the vessel,

until another application for preclearance has been made and approved, or

(4) Past due invoices by the representative as set out in § 401.75.

* * * * *

■ 9. Revise § 401.24 to read as follows:

§ 401.24 Application for preclearance.

(a) The representative of a vessel may, on a preclearance form obtained from the Manager, St. Lambert, Quebec or downloaded from the St. Lawrence Seaway Web site (*www.greatlakes-seaway.com*), apply for preclearance, giving particulars of the ownership, liability insurance and physical characteristics of the vessel and guaranteeing payment of the fees that may be incurred by the vessel. The form may also be completed and submitted on the Seaway Web site via e-business. Preclearance application must be received by the St. Lawrence Seaway between 08:00–16:00 hours Monday through Friday excluding holidays and at least 24 hours prior to Seaway inspection or vessel arrival.

(b) For representatives benefitting from the exemption of security tolls as set out in § 401.26(c) and § 401.26(d), a continuous preclearance status may be assigned to all vessels under their responsibility. Validation of the continuous preclearance status will be required every 5 years.

(c) For representatives with a valid security for tolls and a good payment history as set out in § 401.26(c) and § 401.26(d), a continuous preclearance status may be assigned to all vessels under their responsibility. Validation of the continuous preclearance status will be required every year.

(d) In the event that a vessel under the representative's responsibility is modified or upgraded, an application for preclearance will be required to update the vessel's information and reset the vessel's preclearance status.

■ 10. In § 401.26, revise paragraphs (a)(2), (a)(3), (c), and (d) to read as follows:

§ 401.26 Security for tolls.

(a) * * *

(2) A letter of guarantee to the Manager given by a financial institution approved by the Manager; or

(3) A letter of guarantee given to the Manager by an acceptable Bonding Company. Bonding Companies may be accepted if they:

* * * * *

(c)(1) Where a number of vessels:

(i) For each of which a preclearance has been given;

(ii) Are owned or controlled by the same individual or company; and

(iii) Have the same representative,

(2) The security for the tolls may not be required if the individual, company or representative has paid every toll invoice received in the preceding five years within the period set out in § 401.75(a).

(d) Notwithstanding paragraph (c) of this section, where a number of vessels, for each of which a preclearance has been given, are owned or controlled by the same individual or company and have the same representative, the security for the tolls may be reduced or eliminated provided the representative has paid every toll invoice received in the preceding five (5) years within the period set out in § 401.75(a). Upon request from the Manager, the representative must provide the Manager with a financial statement that meets the requirements established by the Manager.

* * * * *

■ 11. In § 401.29 revise paragraph (b) to read as follows:

§ 401.29 Maximum draft.

* * * * *

(b) The draft of a vessel shall meet a minimum draft requirement as defined at inspection on the ESI form and not, in any case, exceed 79.2 dm or the maximum permissible draft designated in a Seaway Notice by the Manager and the Corporation for the part of the Seaway in which a vessel is passing.

* * * * *

■ 12. Revise § 401.34 to read as follows:

§ 401.34 Vessels in tow.

(a) No vessel that is not self-propelled (including but not limited to tug/tows and/or dead ship/tows) shall be underway in any Seaway waters unless it is securely tied to an adequate tug or tugs, in accordance with special instructions given by the Manager or the Corporation pursuant to § 401.33 and must be equipped with an operational anchor.

(b) Every vessel in tow has to be inspected prior to every transit unless it has a valid Seaway Inspection Certificate. The owner/master shall give a 24 hour notice of arrival when an inspection is required.

■ 13. In § 401.46 add new paragraph (c) to read as follows:

§ 401.46 Attending lines.

* * * * *

(c) Mooring lines on deck must be individually attended unless the vessel is equipped with side control and visual contact must be maintained for signal from lock employees taking or letting go of mooring lines.

■ 14. In § 401.52 revise paragraph (b) to read as follows:

§ 401.52 Limit of approach to a bridge.

* * * * *

(b) No vessel shall pass the limit of approach sign at the twin railway bridges on the South Shore Canal at Kahnawake, until both bridges are in a fully open position and both signal lights show green.

■ 15. In § 401.68, revise the section heading and paragraph (c) to read as follows:

§ 401.68 Explosives permission letter.

* * * * *

(c) A written application for a Seaway Explosives Permission Letter certifying that the cargo is packed, marked and stowed in accordance with the *Transportation of Dangerous Goods Regulations* (Canada), the United States regulations under the *Dangerous Cargo Act* and the *International Maritime Dangerous Goods Code,* may be made to the St. Lawrence Seaway Management Corporation, 202 Pitt Street, Cornwall, Ontario, K6J 3P7, or to the Saint Lawrence Seaway Development Corporation, P.O. Box 520, Massena, New York, U.S.A. 13662.

* * * * *

■ 16. In § 401.74, revise paragraphs (a) and (f) to read as follows:

§ 401.74 Transit Declaration.

(a) A Seaway Transit Declaration Form (Cargo and Passenger) shall be forwarded to the Manager by the representative of a vessel, for each vessel that has an approved preclearance except non-cargo vessels, within fourteen (14) days after the vessel enters the Seaway on any up bound or down bound transit. The form may be obtained from the St. Lawrence Management Corporation, 151 Ecluse Street, St. Lambert, Quebec, J4R 2V6 or downloaded from the St. Lawrence Seaway Web site at *www.greatlakes-seaway.com.* The form may also be completed and submitted on the Seaway Web site via e-business.

* * * * *

(f) Seaway Transit Declaration Forms shall be used in assessing toll charges in accordance with the *St. Lawrence Seaway Schedule of Tolls,* and toll accounts shall be forwarded to the representative or its designated agent.

* * * * *

■ 17. In § 401.75, revise paragraph (b) and add a new paragraph (d) to read as follows:

§ 401.75 Payment of tolls.

* * * * *

(b) Tolls established by agreement between Canada and the United States, and known as the *St. Lawrence Seaway Schedule of Tolls,* shall be paid by pleasure crafts with prepaid tickets purchased in Canadian funds using credit card ticket dispensers located at pleasure craft docks or Paypal on the Seaway Web site. At U.S. locks, the toll is paid in U.S. funds or the pre-established equivalent in Canadian funds or through payment via Pay.gov on the Seaway Web site.

* * * * *

(d) Vessel representatives with past due toll accounts, unpaid after 45 days, may be subject to the suspension of preclearance for each vessel of which a preclearance has been given and/or the immediate removal of the waved security for the toll charges set in § 401.26(c) and § 401.26(d.)

■ 18. In § 401.79, add a new paragraph (b)(5) to read as follows:

§ 401.79 Advance notice of arrival, vessels requiring inspection.

* * * * *

(b) * * *

(5) A tall ship or vessel of an unusual design is subject to Seaway yearly inspection.

Issued at Washington, DC, on January 22, 2014. Saint Lawrence Seaway Development Corporation.

Carrie Lavigne,

Chief Counsel.

[FR Doc. 2014–01488 Filed 1–27–14; 8:45 am]

BILLING CODE 4910–61–P

ENVIRONMENTAL PROTECTION AGENCY

40 CFR Part 52

[EPA–R06–OAR–2011–0500; FRL–9905–83–Region 6]

Approval and Promulgation of Implementation Plans; Louisiana; Interstate Transport of Fine Particulate Matter

AGENCY: Environmental Protection Agency (EPA).

ACTION: Proposed rule.

SUMMARY: EPA is proposing to approve a portion of a State Implementation Plan (SIP) submittal from the State of Louisiana to address Clean Air Act (CAA or Act) requirements that prohibit air emissions which will contribute significantly to nonattainment or interfere with maintenance in any other state for the 2006 fine particulate matter ($PM_{2.5}$) national ambient air quality standards (NAAQS). EPA proposes to determine that the existing SIP for Louisiana contains adequate provisions to prohibit air pollutant emissions from significantly contributing to nonattainment or interfering with maintenance of the 2006 24-hour $PM_{2.5}$ NAAQS (2006 $PM_{2.5}$ NAAQS) in any other state as required by the Act.

DATES: Written comments must be received on or before February 27, 2014.

ADDRESSES: Submit your comments, identified by Docket No. EPA–R06–OAR–2011–0500, by one of the following methods:

- *www.regulations.gov.* Follow the online instructions.
- *Email:* Mr. Carl Young at *young.carl@epa.gov.*
- *Mail or delivery:* Mr. Guy Donaldson, Chief, Air Planning Section (6PD–L), Environmental Protection Agency, 1445 Ross Avenue, Suite 1200, Dallas, Texas 75202–2733.

Instructions: Direct your comments to Docket No. EPA–R06–OAR–2011–0500. EPA's policy is that all comments received will be included in the public docket without change and may be made available online at *www.regulations.gov,* including any personal information provided, unless the comment includes information claimed to be Confidential Business Information (CBI) or other information whose disclosure is restricted by statute. Do not submit information that you consider to be CBI or otherwise protected through *www.regulations.gov* or email. The *www.regulations.gov* Web site is an ''anonymous access'' system, which means EPA will not know your identity or contact information unless you provide it in the body of your comment. If you send an email comment directly to EPA without going through *www.regulations.gov* your email address will be automatically captured and included as part of the comment that is placed in the public docket and made available on the Internet. If you submit an electronic comment, EPA recommends that you include your name and other contact information in the body of your comment and with any disk or CD–ROM you submit. If EPA cannot read your comment due to technical difficulties and cannot contact you for clarification, EPA may not be able to consider your comment. Electronic files should avoid the use of special characters, any form of encryption, and be free of any defects or viruses.

Docket: The index to the docket for this action is available electronically at *www.regulations.gov* and in hard copy at EPA Region 6, 1445 Ross Avenue, Suite 700, Dallas, Texas. While all documents in the docket are listed in the index, some information may be publicly available only at the hard copy location (e.g., copyrighted material), and some may not be publicly available at either location (e.g., CBI). To inspect the hard copy materials, please schedule an appointment with the person listed in the **FOR FURTHER INFORMATION CONTACT** paragraph below or Mr. Bill Deese at 214–665–7253.

FOR FURTHER INFORMATION CONTACT: Carl Young, (214) 665–6645, *young.carl@epa.gov.*

SUPPLEMENTARY INFORMATION: Throughout this document wherever ''we,'' ''us,'' or ''our'' is used, we mean the EPA.

Table of Contents

I. Background
II. EPA's Evaluation
III. Proposed Action
IV. Statutory and Executive Order Reviews

I. Background

A. Interstate Transport and the 2006 $PM_{2.5}$ NAAQS

In 2006, we established a revised 24-hour NAAQS for $PM_{2.5}$ of 35 micrograms per cubic meter (μg/m^3) (October 17, 2006, 71 FR 6114). Section 110(a)(2)(D)(i) of the CAA identifies four distinct elements related to the evaluation of impacts of interstate transport of air pollutants with respect to a new or revised NAAQS. In this action for the state of Louisiana, we are addressing the first two elements of section 110(a)(2)(D)(i)(I) with respect to the 2006 $PM_{2.5}$ NAAQS.[1] The first element of section 110(a)(2)(D)(i)(I) requires that each SIP for a new or revised NAAQS contain adequate measures to prohibit any source or other type of emissions activity within the state from emitting air pollutants that will ''contribute significantly to nonattainment'' of the NAAQS in another state. The second element of CAA section 110(a)(2)(D)(i)(I) requires that each SIP for a new or revised NAAQS prohibit any source or other type of emissions activity in the state from emitting pollutants that will ''interfere with maintenance'' of the applicable NAAQS in any other state.

B. EPA Rules Addressing Interstate Transport for the 2006 $PM_{2.5}$ NAAQS

EPA has addressed the requirements of section 110(a)(2)(D)(i)(I) in past

[1] This proposed action does not address the two elements of the transport SIP provision (in CAA section 110(a)(2)(D)(i)(II)) regarding interference with measures required to prevent significant deterioration of air quality or to protect visibility in another state.

regulatory actions.[2] The final Cross-State Air Pollution Rule (Transport Rule) addressed the first two elements of CAA section 110(a)(2)(D)(i)(I) in the eastern United States with respect to the 2006 24-hour $PM_{2.5}$ NAAQS, the 1997 annual $PM_{2.5}$ NAAQS, and the 1997 8-hour ozone NAAQS (August 8, 2011, 76 FR 48208). The Transport Rule was intended to replace the earlier Clean Air Interstate Rule (CAIR) which was judicially remanded.[3] *See North Carolina* v. *EPA,* 531 F.3d 896 (D.C. Cir. 2008) modified on rehearing, 550 F.3d 1176 (D.C. Cir. 2008). On August 21, 2012, the U.S. Court of Appeals for the D.C. Circuit issued a decision vacating the Transport Rule. *See EME Homer City Generation, L.P.* v. *E.P.A.,* 696 F.3d 7 (D.C. Cir. 2012). The court also ordered EPA to continue implementing CAIR in the interim. On June 24, 2013, the Supreme Court granted the United States' petition for certiorari and agreed to review the D.C. Circuit's decision in *EME Homer City.* The Supreme Court held oral arguments on December 10, 2013. In the meantime, and unless the *EME Homer City* decision is reversed or otherwise modified by the Supreme Court, EPA intends to act in accordance with the D.C. Circuit opinion in *EME Homer City.*

C. Louisiana's Submittals

On May 16, 2011, Louisiana submitted a SIP revision to address the requirements of CAA section 110(a)(2)(D)(i)(I) for the 2006 $PM_{2.5}$ NAAQS. The submittal stated that the State had adequate provisions to prohibit air pollutant emissions from within the State that significantly contribute to nonattainment or interfere with maintenance of the 2006 $PM_{2.5}$ NAAQS based on Louisiana having EPA-approved CAIR SIPs requiring certain electric generating units to participate in sulfur dioxide and nitrogen oxide trading programs (72 FR 39741; 72 FR 55064). On May 21, 2013, the State submitted a letter to EPA serving as a technical supplement for the 2006 $PM_{2.5}$ NAAQS. The letter stated that because the more recent and improved air quality modeling evaluating interstate transport for the 2006 $PM_{2.5}$ NAAQS conducted by EPA for the Transport Rule is now available and supports the conclusion that emissions in Louisiana do not significantly contribute to nonattainment or interfere with maintenance of the 2006 $PM_{2.5}$ NAAQS in any other State, it was being submitted as the basis for the conclusions in lieu of the previous technical information provided in the May 16, 2011 submission. The submittal and technical supplement document the State's assessments that Louisiana emissions will not contribute significantly to nonattainment, or interfere with maintenance, in any other state for the 2006 $PM_{2.5}$ NAAQS. The submittals and technical supplement are available electronically through the *www.regulations.gov* Web site (Docket No. EPA–R06–OAR–2011–0500).

II. EPA's Evaluation

A. EPA's Approach for Evaluating Interstate Transport of Air Pollution

To determine whether the CAA section 110(a)(2)(D)(i)(I) requirement is satisfied, EPA must determine whether a state's emissions contribute significantly to nonattainment or interfere with maintenance in any other state. If this factual finding is in the negative, then section 110(a)(2)(D)(i)(I) does not require any changes to a state's SIP. EPA is proposing to determine that the existing SIP for Louisiana is adequate to satisfy the requirements of 110(a)(2)(D)(i)(I) of the CAA to address interstate transport requirements with regard to the 2006 $PM_{2.5}$ NAAQS. This proposed conclusion is based on air quality modeling originally conducted by EPA to quantify each individual eastern state's (including Louisiana's) contributions to downwind nonattainment and maintenance areas during the rulemaking process for the Transport Rule.

In the Transport Rule rulemaking, we used air quality modeling to: (1) identify locations projected to be nonattainment or have maintenance problems in 2012 for the 2006 24-hour $PM_{2.5}$ NAAQS (nonattainment and maintenance receptors) and (2) quantify the air quality contributions of emissions from upwind states on downwind 24-hour $PM_{2.5}$ concentrations at the receptors for the 2006 24-hour $PM_{2.5}$ NAAQS in 2012.[4] As detailed in the Air Quality Modeling TSDs, we used a threshold of 1 percent of the NAAQS to identify linkages between upwind states and downwind nonattainment and maintenance receptors. With respect to the 2006 24-hour $PM_{2.5}$ NAAQS, our analysis for the Transport Rule found that the 1 percent threshold captures a high percentage of the total pollution transport affecting downwind states with nonattainment/maintenance receptors.[5] The air quality threshold used for the 2006 24-hour $PM_{2.5}$ NAAQS was 0.35 $\mu g/m^3$ (1 percent of 35.0 $\mu g/m^3$). If a state's air quality contribution to downwind nonattainment/maintenance receptors in all other states did not exceed the threshold, it was concluded that its emissions do not contribute significantly to nonattainment or interfere with maintenance in another state for the NAAQS.

B. Evaluation of the State's Submittals

EPA's evaluation confirms Louisiana's analysis provided in the SIP submittal for the State of Louisiana submitted on May 16, 2011, and the technical supplement submitted on May 21, 2013. The air quality modeling performed for the Transport Rule found that the impact from Louisiana emissions on both downwind nonattainment and maintenance receptors was less than the 1 percent threshold for the 2006 $PM_{2.5}$ NAAQS. EPA therefore did not find emissions from Louisiana linked to any downwind nonattainment or maintenance receptors for the 2006 24-hour $PM_{2.5}$ NAAQS.

Below is a summary of the air quality modeling results for Louisiana from Table IV–9 of EPA's Air Quality Modeling TSD regarding Louisiana's largest contribution to both downwind $PM_{2.5}$ nonattainment and maintenance areas.

[2] *See* NO_X SIP Call, 63 FR 57371 (October 27, 1998); Clean Air Interstate Rule (CAIR), 70 FR 25172 (May 12, 2005); and Transport Rule or Cross-State Air Pollution Rule, 76 FR 48208 (August 8, 2011).

[3] CAIR addressed the 1997 annual and 24-hour $PM_{2.5}$ NAAQS, and the 1997 8-hour ozone NAAQS. It did not address the 2006 24-hour $PM_{2.5}$ NAAQS.

[4] See the Technical Support Documents for the Transport Rule (proposal and final) found in the regulations.gov e-docket for this action (EPA–R06–OAR–2011–0500).

[5] See section IV.F (Analysis of Contributions Captured by Various Thresholds) of the Air Quality Modeling TSD.

LOUISIANA'S LARGEST CONTRIBUTION TO DOWNWIND $PM_{2.5}$ NONATTAINMENT AND MAINTENANCE AREAS

NAAQS	Air quality threshold (μg/m³)	Largest downwind contribution to nonattainment (μg/m³)	Largest downwind contribution to maintenance (μg/m³)
2006 24-hour $PM_{2.5}$ NAAQS (35 μg/m³)	0.35	0.11	0.13

Based on this analysis, we propose to approve the portion of the May 16, 2011 Louisiana SIP submittal, and the technical supplement submitted on May 21, 2013, determining that the existing SIP for Louisiana contains adequate provisions to prohibit air pollutant emissions from contributing significantly to nonattainment or interfering with maintenance of the 2006 $PM_{2.5}$ NAAQS in any other state as required by CAA section 110(a)(2)(D)(i)(I).

We continue to believe it is appropriate to rely on the modeling conducted during the rulemaking for the Transport Rule even though the rule itself was vacated by the D.C. Circuit. *EME Homer City Generation L.P.* v. *EPA,* 696 F.3d 7 (D.C. Cir. 2012).[6] Nothing in the *EME Homer City* opinion suggests that the air quality modeling on which our proposal relies is flawed or invalid for any reason. In addition, nothing in that opinion undermines or calls into question our proposed conclusion that, because emissions from Louisiana do not contribute more than one percent of the 2006 $PM_{2.5}$ NAAQS to any downwind area with nonattainment or maintenance problems, Louisiana does not contribute significantly to nonattainment or interfere with maintenance in another state for this NAAQS. Further, EPA is not proposing to rely on any requirements of the Transport Rule or emission reductions associated with that rule to support its conclusion that Louisiana has met its 110(a)(2)(D)(i)(I) obligations with respect to the 2006 $PM_{2.5}$ NAAQS.

C. Section 110(l) of the Act

Section 110(l) of the Act prohibits EPA from approving any SIP revision that would interfere with any applicable requirement concerning attainment and reasonable further progress or any other applicable requirement of the Act. The SIP submittal from the State of Louisiana contains no new regulatory provisions and does not affect any requirement in Louisiana's applicable implementation plan. Therefore, the submission does not interfere with any applicable requirement concerning attainment and reasonable further progress or any other applicable requirement of the Act. EPA has concluded, based on Louisiana's and EPA's technical analysis, that the existing Louisiana SIP is sufficient to meet the requirements of 110(a)(2)(D)(i)(I) with respect to the 2006 $PM_{2.5}$ NAAQS.

[6] On June 24, 2013, the Supreme Court granted EPA's petition for certiorari and agreed to review the D.C. Circuit's decision in *EME Homer City.*

III. Proposed Action

We are proposing to approve a portion of a SIP submittal for the State of Louisiana submitted on May 16, 2011, and the technical supplement submitted on May 21, 2013, to address interstate transport for the 2006 $PM_{2.5}$ NAAQS. Based on our evaluation we propose to approve the portion of the SIP submittal determining the existing SIP for Louisiana contains adequate provisions to prohibit air emissions from contributing significantly to nonattainment or interfering with maintenance of the 2006 $PM_{2.5}$ NAAQS in any other state as required by CAA section 110(a)(2)(D)(i)(I). This action is being taken under section 110 of the Act.

IV. Statutory and Executive Order Reviews

Under the Clean Air Act, the Administrator is required to approve a SIP submission that complies with the provisions of the Act and applicable Federal regulations. 42 U.S.C. 7410(k); 40 CFR 52.02(a). Thus, in reviewing SIP submissions, EPA's role is to approve state choices, provided that they meet the criteria of the Clean Air Act. Accordingly, this action merely proposes to approve state law as meeting Federal requirements and does not impose additional requirements beyond those imposed by state law. For that reason, this action:

- Is not a ''significant regulatory action'' subject to review by the Office of Management and Budget under Executive Order 12866 (58 FR 51735, October 4, 1993);
- does not impose an information collection burden under the provisions of the Paperwork Reduction Act (44 U.S.C. 3501 *et seq.*);
- is certified as not having a significant economic impact on a substantial number of small entities under the Regulatory Flexibility Act (5 U.S.C. 601 *et seq.*);
- does not contain any unfunded mandate or significantly or uniquely affect small governments, as described in the Unfunded Mandates Reform Act of 1995 (Pub. L. 104–4);
- does not have Federalism implications as specified in Executive Order 13132 (64 FR 43255, August 10, 1999);
- is not an economically significant regulatory action based on health or safety risks subject to Executive Order 13045 (62 FR 19885, April 23, 1997);
- is not a significant regulatory action subject to Executive Order 13211 (66 FR 28355, May 22, 2001);
- is not subject to requirements of section 12(d) of the National Technology Transfer and Advancement Act of 1995 (15 U.S.C. 272 note) because application of those requirements would be inconsistent with the Clean Air Act; and
- does not provide EPA with the discretionary authority to address, as appropriate, disproportionate human health or environmental effects, using practicable and legally permissible methods, under Executive Order 12898 (59 FR 7629, February 16, 1994).

In addition, this proposed rule does not have tribal implications as specified by Executive Order 13175 (65 FR 67249, November 9, 2000), because the SIP is not approved to apply in Indian country located in the state, and EPA notes that it will not impose substantial direct costs on tribal governments or preempt tribal law.

List of Subjects in 40 CFR Part 52

Environmental protection, Air pollution control, Nitrogen dioxide, Particulate matter, Reporting and recordkeeping requirements, Sulfur oxides, Volatile organic compounds.

Authority: 42 U.S.C. 7401 *et seq.*

Dated: January 15, 2014.

Ron Curry,

Regional Administrator, Region 6.

[FR Doc. 2014–01587 Filed 1–27–14; 8:45 am]

BILLING CODE 6560–50–P

ENVIRONMENTAL PROTECTION AGENCY

40 CFR Part 60

[DOCKET NUMBER [EPA–HQ–OAR–2013–0495; FRL 9905–61–OAR]

Standards of Performance for Greenhouse Gas Emissions for New Stationary Sources: Electric Utility Generating Units

Correction

In proposed rule document 2014–01065 appearing on pages 3357–3358 in the issue of Wednesday, January 22, 2014, make the following corrections:

1. On page 3357, in the third column, in the document heading, ''**40 CFR Part 63**'' is corrected to read ''**40 CFR Part 60**''.

2. On page 3358, in the second column, in the seventh line from the bottom, ''**List of Subjects in 40 CFR Part 63**'' should read ''**List of Subjects in 40 CFR Part 60**''.

[FR Doc. C1–2014–01065 Filed 1–27–14; 8:45 am]

BILLING CODE 1505–01–D

Notices

Federal Register

Vol. 79, No. 18

Tuesday, January 28, 2014

This section of the FEDERAL REGISTER contains documents other than rules or proposed rules that are applicable to the public. Notices of hearings and investigations, committee meetings, agency decisions and rulings, delegations of authority, filing of petitions and applications and agency statements of organization and functions are examples of documents appearing in this section.

DEPARTMENT OF AGRICULTURE

Food Safety and Inspection Service

[Docket No. FSIS–2013–0045]

Codex Alimentarius Commission: Meeting of the Codex Committee on Fish and Fish Products

AGENCY: Office of the Under Secretary for Food Safety, USDA.

ACTION: Notice of public meeting and request for comments.

SUMMARY: The Office of the Under Secretary for Food Safety, U.S. Department of Agriculture (USDA), National Oceanic and Atmospheric Administration (NOAA), and the Food and Drug Administration (FDA), are sponsoring a public meeting scheduled to take place on February 6, 2014. The objective of the public meeting is to present information and receive public comments on agenda items and draft United States positions to be discussed at the 33rd Session of the Codex Committee on Fish and Fishery Products (CCFFP) of the Codex Alimentarius Commission (Codex), which will take place in Bergen, Norway, from February 17–21, 2014. The Acting Under Secretary for Food Safety, NOAA, and FDA recognize the importance of providing interested parties the opportunity to obtain background information on the 33rd Session of CCFFP and to address items on the agenda.

DATES: The public meeting is scheduled for February 6, 2014, from 1:00 p.m. to 4:00 p.m.

ADDRESSES: The public meeting will take place at FDA, Center for Food Safety and Applied Nutrition (CFSAN), Wiley Building, Room 1A–001, 5100 Paint Branch Parkway, College Park, MD 20740.

Documents related to the 33rd session of CCFFP will be accessible via the World Wide Web at the following address: *http://www.codexalimentarius.org/meetings-reports/en/.*

Timothy Hansen and Dr. William Jones, U.S. Delegates to the 33rd session of CCFFP, invite U.S. interested parties to submit their comments electronically to the following email addresses: *Timothy.Hansen@noaa.gov* and *William.Jones@fda.hhs.gov.*

Call in Number:

If you wish to participate in the public meeting for the 33rd session of CCFFP by conference call, please use the call-in number and participant code listed below:

Call-in Number: 1–888–844–9904
Participant Code: 512–6092

For Further Information about the 33rd Session of CCFFP Contact: Timothy Hansen, Director, Seafood Inspection Program, National Marine Fisheries Services, National Oceanic and Atmospheric Administration, 1315 East West Highway SSMC #3, Silver Spring, MD 20910; Telephone: (301) 713–2355, Fax: (301) 713–1081, Email: *Timothy.Hansen@noaa.gov.*

Dr. William Jones, Director, Division of Seafood Safety, Office of Food Safety, (HFS–325), U.S. Food and Drug Administration, 5100 Paint Branch Parkway, College Park, MD, 20740; Phone: (240) 402–2300, Fax: (301) 436–2601, Email: *William.Jones@fda.hhs.gov.*

For Further Information About the Public Meeting Contact: Paulo Almeida, U.S. Codex Office, 1400 Independence Avenue SW., Room 4861, South Building, Washington, DC 20250; Telephone: (202) 205–7760, Fax: (202) 720–3157, Email: *Paulo.Almeida@fsis.usda.gov.*

SUPPLEMENTARY INFORMATION:

Background

Codex was established in 1963 by two United Nations organizations, the Food and Agriculture Organization and the World Health Organization. Through adoption of food standards, codes of practice, and other guidelines developed by its committees, and by promoting their adoption and implementation by governments, Codex seeks to protect the health of consumers and ensure that fair practices are used in the food trade.

The CCFFP is responsible for elaborating worldwide standards for fresh, frozen (including quick frozen) or otherwise processed fish, crustaceans and mollusc. The Committee is hosted by Norway.

Issues To Be Discussed at the Public Meeting

The following items on the Agenda for the 33rd session of CCFFP will be discussed during the public meeting:

- Matters referred to the Committee by the Codex Alimentarius Commission and other Codex Committees
- Matters arising from the work of the Food and Agricultural Organization (FAO) and the World Health Organization (WHO)
- Matters arising from the work of the World Organization for Animal Health (OIE)
- Draft Performance Criteria for Reference and Confirmatory Methods for Marine Biotoxins (Section I–8.6 Determination of Biotoxins) in the Standard for Live and Raw Bivalve Molluscs
- Standard for Smoked Fish, Smoke-Flavoured Fish, and Smoke-Dried Fish (Section 4 Food Additives)
- Draft Standard for Raw, Fresh, and Quick Frozen Scallop Products
- Proposed Draft Code of Practice on the Processing of Scallop Meat
- Proposed Draft Code of Practice for Fish and Fishery Products (section on Sturgeon caviar)
- Proposed Draft Code of Practice for Processing of Fish Sauce
- Proposed Food Additive Provisions in Standards for Fish and Fishery Products (food additive provisions in adopted standards)
- Discussion Paper on Histamine
- Discussion Paper on Nitrogen Factors
- Code of Practice for Fish and Fishery Products (optional final product requirements for commodities)

Each issue listed will be fully described in documents distributed, or to be distributed, by the Codex Secretariat before the Committee Meeting. Members of the public may access or request copies of these documents (see **ADDRESSES**).

Public Meeting

At the February 6, 2014, public meeting, draft U.S. positions on the agenda items will be described and discussed, and attendees will have the opportunity to pose questions and offer comments. Written comments may be offered at the meeting or sent to the U.S.

Delegates for the 33rd session of CCFFP, Timothy Hansen & Dr. William Jones (see **ADDRESSES**). Written comments should state that they relate to activities of the 33rd session of CCFFP.

USDA Nondiscrimination Statement

The U.S. Department of Agriculture (USDA) prohibits discrimination in all its programs and activities on the basis of race, color, national origin, gender, religion, age, disability, political beliefs, sexual orientation, and marital or family status. (Not all prohibited bases apply to all programs.) Persons with disabilities who require alternative means for communication of program information (Braille, large print, audiotape, etc.) should contact USDA's Target Center at (202) 720–2600 (voice and TTY). To file a written complaint of discrimination, write USDA, Office of the Assistant Secretary for Civil Rights, 1400 Independence Avenue SW., Washington, DC 20250–9410 or call (202) 720–5964 (voice and TTY). USDA is an equal opportunity provider and employer.

Additional Public Notification

FSIS will announce this notice online through the FSIS Web page located at *http://www.fsis.usda.gov/wps/portal/fsis/topics/regulations/federal-register.* FSIS will also make copies of this **Federal Register** publication available through the FSIS Constituent Update, which provides information on FSIS policies, procedures, regulations, **Federal Register** notices, FSIS public meetings, and other matters that could affect or would be of interest to constituents and stakeholders. The Update is communicated via Listserv, a free electronic mail subscription service for industry, trade groups, consumer interest groups, health professionals, and other individuals who have asked to be included. The Update is also available on the FSIS Web page. In addition, FSIS offers an email subscription service which provides automatic and customized access to selected food safety news and information. This service is available at: *http://www.fsis.usda.gov/wps/portal/fsis/programs-and-services/email-subscription-service.* Options range from recalls to export information to regulations, directives and notices. Customers can add or delete subscriptions themselves, and have the option to password protect their account.

Done at Washington, DC on: January 9, 2014.

Mary Frances Lowe,

U.S. Manager for Codex Alimentarius.

[FR Doc. 2014–01475 Filed 1–27–14; 8:45 am]

BILLING CODE 3410–DM–P

COMMISSION ON CIVIL RIGHTS

Agenda and Notice of Public Meeting of the Massachusetts Advisory Committee

Notice is hereby given, pursuant to the provisions of the rules and regulations of the U.S. Commission on Civil Rights (Commission), and the Federal Advisory Committee Act (FACA), that a planning meeting of the Massachusetts Advisory Committee to the Commission will convene at 12:00 p.m. (EST) on Friday, February 20, 2014, at McCarter & English, located at 265 Franklin St., Boston, MA 02110. The purpose of the meeting is for the committee is to discuss its September briefing on the criminalization of school discipline, and to plan the next steps for its project on school disciplinary policies and if such policies have a disparate impact on students of color.

Members of the public are entitled to submit written comments. The comments must be received in the regional office by Thursday, March 20, 2014. Comments may be mailed to the Eastern Regional Office, U.S. Commission on Civil Rights, 1331 Pennsylvania Avenue, Suite 1150, Washington, DC 20425, faxed to (202) 376–7548, or emailed to Barbara de La Viez at *ero@usccr.gov.* Persons who desire additional information may contact the Eastern Regional Office at 202–376–7533.

Persons needing accessibility services should contact the Eastern Regional Office at least 10 working days before the scheduled date of the meeting.

Records generated from this meeting may be inspected and reproduced at the Eastern Regional Office, as they become available, both before and after the meeting. Persons interested in the work of this advisory committee are advised to go to the Commission's Web site, *www.usccr.gov,* or to contact the Eastern Regional Office at the above phone number, email or street address.

The meetings will be conducted pursuant to the provisions of the rules and regulations of the Commission and FACA.

Dated: January 22, 2013.

David Mussatt,

Acting Chief, Regional Programs Coordination Unit.

[FR Doc. 2014–01489 Filed 1–27–14; 8:45 am]

BILLING CODE 6335–01–P

DEPARTMENT OF COMMERCE

Submission for OMB Review; Comment Request

The Department of Commerce will submit to the Office of Management and Budget (OMB) for clearance the following proposal for collection of information under the provisions of the Paperwork Reduction Act (44 U.S.C. Chapter 35).

Agency: Bureau of Industry and Security (BIS).

Title: Voluntary Self-Disclosure of Violations of the Export Administration Regulations.

OMB Control Number: 0694–0058.

Form Number(s): N/A.

Type of Request: Regular submission (extension of a current information collection).

Number of Respondents: 180.

Average Hours per Response: 10 hours.

Burden Hours: 1,800.

Needs and Uses: This collection of information is needed to detect violations of the Export Administration Act and Regulations, and determine if an investigation or prosecution is necessary and to reach a settlement with violators. Voluntary self-disclosure of EAR violations strengthens BIS's enforcement efforts by allowing BIS to conduct investigations of the disclosed incidents faster than would be the case if BIS had to detect the violations without such disclosures. BIS evaluates the seriousness of the violation and either (1) informs the person making the disclosure that no action is warranted; (2) issues a warning letter; (3) issues a proposed charging letter and attempts to settle the matter; (4) issues a charging letter if settlement is not reached; and/or (5) refers the matter to the U.S. Department of Justice for criminal prosecution.

Affected Public: Businesses or other for-profit institutions.

Frequency: On occasion.

Respondent's Obligation: Voluntary.

Copies of the above information collection proposal can be obtained by calling or writing Jennifer Jessup, Departmental Paperwork Clearance Officer, (202) 482–0336, Department of Commerce, Room 6616, 14th and Constitution Avenue NW., Washington, DC 20230 (or via the Internet at *JJessup@doc.gov.*

Written comments and recommendations for the proposed information collection should be sent within 30 days of publication of this notice to Jasmeet Seehra, OMB Desk Officer, by email to *Jasmeet_K._Seehra@omb.eop.gov,* or by fax to (202) 395–5167.

Dated: January 22, 2014.

Gwellnar Banks,

Management Analyst, Office of the Chief Information Officer.

[FR Doc. 2014–01483 Filed 1–27–14; 8:45 am]

BILLING CODE 3510–33–P

DEPARTMENT OF COMMERCE

Foreign-Trade Zones Board

[B–3–2014]

Foreign-Trade Zone (FTZ) 49—Newark, New Jersey Area, Notification of Proposed Production Activity, Western Carriers, Inc., (Kitting of Liquor Gift Sets), North Bergen, NJ

The Port Authority of New York and New Jersey, grantee of FTZ 49, submitted a notification of proposed production activity to the FTZ Board on behalf of Western Carriers, Inc. (WCI), located in North Bergen, New Jersey. The notification conforming to the requirements of the regulations of the FTZ Board (15 CFR 400.22) was received on January 13, 2014.

The WCI facility is located within Site 15 of FTZ 49. The facility is used for the production of liquor gift sets by WCI and its customers. Pursuant to 15 CFR 400.14(b), FTZ activity would be limited to the specific foreign-status components and specific finished products described in the submitted notification (as described below) and subsequently authorized by the FTZ Board.

Production under FTZ procedures could exempt WCI and its customers from customs duty payments on the foreign status components used in export production. On its domestic sales, WCI and its customers would be able to choose the duty rate during customs entry procedures that applies to finished whiskey, gin, or vodka gift sets (free) for the foreign status inputs noted below. Customs duties also could possibly be deferred or reduced on foreign status production equipment.

The components sourced from abroad include: glassware (drinking glasses); Irish/Scotch whiskey; gin; and, vodka (duty rate ranges from free to 22.5%).

Public comment is invited from interested parties. Submissions shall be addressed to the FTZ Board's Executive Secretary at the address below. The closing period for their receipt is March 10, 2014.

A copy of the notification will be available for public inspection at the Office of the Executive Secretary, Foreign-Trade Zones Board, Room 21013, U.S. Department of Commerce, 1401 Constitution Avenue NW., Washington, DC 20230–0002, and in the ''Reading Room'' section of the FTZ Board's Web site, which is accessible via *www.trade.gov/ftz.*

FOR FURTHER INFORMATION CONTACT: Pierre Duy at *Pierre.Duy@trade.gov* or (202) 482–1378.

Dated: January 17, 2014.

Andrew McGilvray,

Executive Secretary.

[FR Doc. 2014–01576 Filed 1–27–14; 8:45 am]

BILLING CODE 3510–DS–P

DEPARTMENT OF COMMERCE

International Trade Administration

[A–583–841]

Polyvinyl Alcohol From Taiwan: Notice of Court Decision Not in Harmony With Final Determination of Sales at Less Than Fair Value and Revocation of Antidumping Duty Order

AGENCY: Enforcement and Compliance, formerly Import Administration, International Trade Administration, Department of Commerce.

SUMMARY: On December 18, 2013, the United States Court of International Trade (the Court or CIT) sustained the Department of Commerce's (the Department) final results of the remand redetermination relating to the less than fair value investigation of polyvinyl alcohol (PVA) from Taiwan, in *Chang Chun Petrochemical Co. Ltd.* v. *United States,* Court No. 11–00095, Slip. Op. 13–151 (CIT 2013). Consistent with the decision of the United States Court of Appeals for the Federal Circuit (CAFC) in *Timken Co.* v. *United States,* 893 F.2d 337 (Fed. Cir. 1990) (*Timken*), as clarified by *Diamond Sawblades Mfrs. Coalition* v. *United States,* 626 F.3d 1374 (Fed. Cir. 2010) (*Diamond Sawblades*), the Department is notifying the public that the final CIT judgment in this case is not in harmony with the Department's *Final Determination* and is amending its *Final Determination* in the investigation of PVA from Taiwan covering the period of investigation (POI) of July 1, 2003, through June 30, 2004, with respect to the weighted-average dumping margin assigned to Chang Chun Petrochemical Co. Ltd. (CCPC).[1]

DATES: Effective December 30, 2013.[2]

FOR FURTHER INFORMATION CONTACT: Sandra Dreisonstok, Office I, AD/CVD Operations, Enforcement and Compliance, International Trade Administration, U.S. Department of Commerce, 14th Street and Constitution Avenue NW., Washington, DC 20230; telephone: (202) 482–0768.

SUPPLEMENTARY INFORMATION:

Background

On February 1, 2011, the Department published the *Final Determination.*[3] On March 15, 2011, the Department published the antidumping duty order on PVA from Taiwan in the **Federal Register**.[4] Following a challenge by respondent CCPC, the CIT remanded the *Final Determination* to the Department for further consideration on April 10, 2013.[5] The CIT sustained the Department's remand redetermination in which the Department found that the only mandatory respondent did not make sales at less than fair value in *Chang Chun Petrochemical Co. Ltd.* v. *United States,* Court No. 11–00095, Slip. Op. 13–151 (CIT 2013).

Because there is now a final court decision in this case, the Department is amending its *Final Determination* with respect to CCPC's weighted-average dumping margin for the POI. The revised weighted-average dumping margin for CCPC is 0.00 percent.

Revocation of the Order

Pursuant to the Court of Appeals for the Federal Circuit's (Federal Circuit's) decision in *Diamond Sawblades* and the CIT's decision affirming the Department's remand redetermination, the Department is revoking the antidumping duty order on PVA from Taiwan because the revised weighted-average dumping margin for CCPC, the only mandatory respondent in the investigation, is now zero. As a result of this revocation, the Department will not

[1] *See Polyvinyl Alcohol from Taiwan: Final Determination of Sales at Less Than Fair Value,* 76 FR 5562 (February 1, 2011) (*Final Determination*).

[2] December 28, 2013, ten days after the Court's opinion was issued, falls on a Saturday. Therefore, the effective date is Monday, December 30, 2013. *See Notice of Clarification: Application of ''Next Business Day'' Rule for Administrative Determination Deadlines Pursuant to the Tariff Act of 1930, As Amended,* 70 FR 24533 (May 10, 2005).

[3] *See Final Determination.*

[4] *See Antidumping Duty Order: Polyvinyl Alcohol From Taiwan,* 76 FR 13982 (March 15, 2011) (*Order*).

[5] *Chang Chun Petrochemical Co. Ltd.* v. *United States,* Consol. Court No 11–00095, Slip Op. 13–49 (Apr. 10, 2013).

initiate any new administrative reviews of this *Order*.[6]

Notification to Interested Parties

This notice serves as a reminder to parties subject to administrative protective order (APO) of their responsibility concerning the disposition of proprietary information disclosed under APO in accordance with 19 CFR 351.305(a)(3). Timely written notification of the destruction of APO materials or conversion to judicial protective order is hereby requested. Failure to comply with the regulations and the terms of the APO is a sanctionable violation.

Timken Notice

In its decision in *Timken,* 893 F.2d at 341, the Federal Circuit held that, pursuant to section 516A(c)(1) of the Tariff Act of 1930, as amended (the Act), the Department must publish a notice of a court decision that is not ''in harmony'' with a Department determination and must suspend liquidation of entries pending a ''conclusive'' court decision. The CIT's December 18, 2013, judgment in this case sustaining the Department's Remand Redetermination constitutes a final decision of that court that is not in harmony with the Department's *Final Determination.* This notice is published in fulfillment of the publication requirements of *Timken.*

Accordingly, the Department intends to issue instructions to U.S. Customs and Border Protection to suspend liquidation of all unliquidated entries of subject merchandise from Taiwan which are entered, or withdrawn from warehouse, for consumption on or after December 30, 2013. The company-specific cash deposit rate will be zero percent. Pursuant to *Timken, Diamond Sawblades,* and *Hosiden Corporation* v. *United States,* 861 F. Supp. 115 (Fed. Cir. 1994), the suspension of liquidation on all entries of PVA from Taiwan entered, or withdrawn from warehouse, for consumption on or after December 30, 2013, that remain unliquidated will continue until there is a ''final and conclusive'' court decision.

This notice is issued and published in accordance with sections 516A(e)(l) of the Act.

Dated: January 17, 2014.

Christian Marsh,

Deputy Assistant Secretary for Antidumping and Countervailing Duty Operations.

[FR Doc. 2014–01574 Filed 1–27–14; 8:45 am]

BILLING CODE 3510–DS–P

[6] Currently there are no unfinished or ongoing administrative reviews of this order.

DEPARTMENT OF COMMERCE

International Trade Administration

Advisory Committee on Supply Chain Competitiveness: Notice of Public Meeting

AGENCY: International Trade Administration, U.S. Department of Commerce.

ACTION: Notice of open meeting.

SUMMARY: This notice sets forth the schedule and proposed topics of discussion for a public meeting of the Advisory Committee on Supply Chain Competitiveness (Committee).

DATES: The meeting will be held on February 20, 2014, from 9 a.m. to 4 p.m., Eastern Standard Time (EST).

ADDRESSES: The meeting will be held at the U.S. Department of Commerce, 1401 Constitution Avenue NW., Room 4830, Washington, DC 20230.

FOR FURTHER INFORMATION CONTACT: Richard Boll, Office of Supply Chain, Professional & Business Services, International Trade Administration. (Phone: (202) 482–1135 or email: *richard.boll@trade.gov*)

SUPPLEMENTARY INFORMATION:

Background: The Committee was established under the discretionary authority of the Secretary of Commerce and in accordance with the Federal Advisory Committee Act (5 U.S.C. App. 2). It provides advice to the Secretary of Commerce on the necessary elements of a comprehensive policy approach to supply chain competitiveness designed to support U.S. export growth and national economic competitiveness, encourage innovation, facilitate the movement of goods, and improve the competitiveness of U.S. supply chains for goods and services in the domestic and global economy; and provides advice to the Secretary on regulatory policies and programs and investment priorities that affect the competitiveness of U.S. supply chains. For more information about the Committee visit: *http://ita.doc.gov/td/sif/DSCT/ACSCC/.*

Matters To Be Considered: Committee members are expected to continue to discuss the major competitiveness-related topics raised at the previous Committee meetings, including trade and competitiveness; freight movement and policy; information technology and data requirements; regulatory issues; and finance and infrastructure. The Committee's subcommittees will report on the status of their work regarding these topics. The agenda may change to accommodate Committee business. The Office of Supply Chain, Professional & Business Services will post the final detailed agenda on its Web site, *http://ita.doc.gov/td/sif/DSCT/ACSCC/,* at least one week prior to the meeting.

The meeting will be open to the public and press on a first-come, first-served basis. Space is limited. The public meeting is physically accessible to people with disabilities. Individuals requiring accommodations, such as sign language interpretation or other ancillary aids, are asked to notify Mr. Richard Boll, at (202) 482–1135 or *richard.boll@trade.gov* five (5) business days before the meeting.

Interested parties are invited to submit written comments to the Committee at any time before and after the meeting. Parties wishing to submit written comments for consideration by the Committee in advance of this meeting must send them to the Office of Supply Chain, Professional & Business Services, 1401 Constitution Ave. NW., Room 11014, Washington, DC 20230, or email to *supplychain@trade.gov.*

For consideration during the meeting, and to ensure transmission to the Committee prior to the meeting, comments must be received no later than 5 p.m. EST on February 10, 2014. Comments received after February 10, 2014, will be distributed to the Committee, but may not be considered at the meeting. The minutes of the meeting will be posted on the Committee Web site within 60 days of the meeting.

Dated: January 22, 2014.

David Long,

Director, Office of Supply Chain, Professional & Business Services.

[FR Doc. 2014–01603 Filed 1–27–14; 8:45 am]

BILLING CODE 3510–DR–P

DEPARTMENT OF COMMERCE

International Trade Administration

Secretarial Energy Business Development Mission to West Africa, May 18–23, 2014

AGENCY: International Trade Administration, Commerce.

ACTION: Notice.

Mission Description

The United States Secretary of Commerce will lead an Energy Business Development Mission to West Africa with stops in Ghana and Nigeria from May 18–23, 2014. This business development mission will promote U.S. exports to Africa by helping U.S. companies launch or increase their business in the energy sector in West Africa. The mission will include

government and business-to-business meetings, market briefings, and networking events. In both countries, the governments and private sector are investing significant money in developing their energy and power sectors. As a result, the mission will focus on export-ready U.S. firms in the energy sector, including oil and gas, that can help the target countries develop and manage energy resources and systems, build out power generation and transmission, and distribution. Mission participants will range from fully integrated energy solutions companies to equipment, technology and ancillary services providers.

The President approved the Presidential Policy Directive (PPD) on Sub-Saharan Africa on June 14, 2012, which became publicly known as the U.S. Strategy Toward Sub-Saharan Africa (''Strategy''). The Strategy recognizes that Africa holds the promise to be ''the world's next major economic success story.'' This recognition of the significant development within Sub-Saharan African economies over the past several years also marks a call for the evolution of U.S. Government economic and commercial policy toward the region, doing more to focus on the two-way nature of trade and investment. This is the first time that promoting U.S. trade and investment has been a cornerstone of a PPD on Sub-Saharan Africa, and it is this objective that the Department of Commerce is working to institutionalize. During his trip to Africa in late June/early July, the President announced plans for Secretary Pritzker to lead a trade mission to sub-Saharan Africa in 2014.

The delegation will be composed of 20–25 U.S. energy firms, representing the mission's target sub-sectors. Representatives of the U.S. Trade and Development Agency (USTDA), the Export-Import Bank of the United States (Ex-Im) and the Overseas Private Investment Corporation (OPIC) will be invited to participate to provide information and counseling regarding their suite of programs and services in sub-Saharan Africa. This collaborative interagency approach highlights the Doing Business in Africa (DBIA) campaign, which aims to harness federal trade promotion and financing capabilities to help the U.S. private sector identify and seize upon trade and investment opportunities.

Commercial Setting

Overview of Energy Needs in Africa

With over 600 million people in sub-Saharan Africa lacking access to electricity, the development challenge is enormous. More than two-thirds of the population of sub-Saharan Africa is without electricity, including more than 85 percent of those living in rural areas. According to the International Energy Agency, sub-Saharan Africa needs more than $300 billion in investments to achieve universal electricity access by 2030—far beyond the capacity of any traditional development program.

This mission is an opportunity to connect U.S. company products, services and expertise to support Africa's enormous power potential, including new discoveries of vast reserves of oil and gas.

Ghana

This West Africa nation of 25 million people is often referred to as the 'Ireland of Africa,' a testament to the Ghanaian's well-earned reputation for being friendly and welcoming to outsiders. It is expected that the country will lead the region as an example for stability, transparency and steady and diversified economic growth. Ghana also holds a special place in the colonial history of the continent, having been the first democratic Sub-Saharan African nation to gain independence when the Republic of Ghana was established on March 6, 1957.

Ghana's economy has been strengthened by a quarter century of relatively sound management, a competitive business environment, and sustained reductions in poverty levels. Per-capita GDP (PPP) in Ghana now stands at $3,500, significantly higher than most of Sub-Saharan Africa and built on a more sustainable and diversified economy. GDP growth has averaged 4% to 8% over the last decade, surging to 7.9% in 2012 (making Ghana the fastest growing economy that year) as new oil revenue came on line. Ghana continues to face challenges in infrastructure development and a worrying increase it its debt-to-GDP ratio has limited financing options. A recent credit downgrade by Fitch, rating Ghana's sovereign debt at B-, will make future financing options even more limited.

While services make up an increasingly important role in Ghana's economy, natural resources and commodity prices still dominate domestic decision making. Ghana is the world's second largest exporter of cocoa and one of the largest producers of gold. The nation's resource base was diversified in 2007 when moderate amounts of oil and gas reserves were discovered offshore in the Gulf of Guinea—enough to spur strong economic growth but not enough to destabilize the economy. Offshore exploration and production has been managed primarily by foreign firms, led by Tullow Oil, and continues to grow with new fields discovered in recent years. Manufacturing lags far behind, due to supply chain uncertainties, lack of a skilled workforce and inadequate infrastructure.

Oil production at Ghana's offshore Jubilee field began in mid-December, 2010 and has, as expected, boosted economic growth significantly. The field is currently producing 120,000 barrels a day, its expected peak level, with reserves estimated at 2 billion barrels. Additional fields are currently being explored and developed, with additional oil resources expected to come online in the next five years. Gas production from the fields continues to be a problem, primarily the result of delays in planning and development of required infrastructure developments. A Chinese-funded and developed gas processing facility originally scheduled for completion in 2012 is still months or years away from production.

A worrying development, impacting particularly the oil and gas sector, is Ghana's recent push for local content requirements. In November 2013, Parliament approved legislation that limits foreign investments in Ghana's petroleum sector due to requirements that local partners of foreign investors maintain a significant share of any oil and gas projects and that corporate management be predominately local. With a petroleum industry that is only four years old, foreign investors will be challenged in finding qualified partners, managers and employees as Ghana's local content regulations go into force.

Without doubt one of Ghana's greatest challenges is utilizing its petroleum reserves and putting local production to use in the power sector. Ghana currently produces 2,000 megawatts of power, half from hydropower plants on the Volta River. Ghana's thermal power production has been hampered by adequate and reliable sources of gas. The primary supplier to Ghana's gas-fired power plants, the West Africa Gas Pipeline has been both an unreliable and costly solution. Plans to bring greater amounts of gas onshore from Jubilee have yet to materialize. The U.S. Government's Power Africa initiative and the Millennium Challenge Corporation are putting together programs that will help this significant problem facing the country.

Ghana will continue to be viewed as a success story for West Africa and, indeed, for all of Sub Saharan Africa. To truly reach its potential, however, decisive leadership making difficult decisions needs to lead the nation to the

next level of development. It will be a difficult task.

Nigeria

Nigeria is Africa's most populous country, accounting for approximately one-fifth of the continent's people and 2.4 percent of the world's population. It is arguably one of the most culturally diverse societies in the world, with approximately 250 ethnic groups among its estimated 170 million people. In 1991, Nigeria's capital was moved from Lagos to Abuja, tagged as the ''Center of Unity.'' A planned city, Abuja is now the political center, or seat of Nigeria's Federal Government. International organizations such as the United Nations, the Economic Community of West African States (ECOWAS), African Union (AU), and Organization of Petroleum Exporting Countries (OPEC) have regional headquarters in Abuja. The ''Commercial Hub,'' Lagos is the most populous city in Nigeria and one of the fastest growing cities in the world. Lagos State is estimated to have a population of more than 17 million and is modernizing itself to meet the criteria of a ''mega city,'' with major infrastructure projects including the construction of a metro/light railway.

Nigeria's annual growth rate averaged over seven percent during the past decade. As a result, the country is regarded as one of the fastest-growing economies in the world. To sustain this annual growth rate, the Government of Nigeria (GON) is privatizing important sectors of Nigeria's economy, promoting public-private partnerships, and encouraging strategic alliances with foreign firms, especially for infrastructure development and technology acquisition in critical sectors such as security, power generation, transportation, and healthcare.

Nigeria is the chief driver of international trade in the Economic Community of West African States (ECOWAS), which consists of 16 countries. Market analysts from the National Association of Chambers of Commerce, Industry, Mines, and Agriculture (NACCIMA) claim that Nigeria accounts for over 40 percent of imports in the sub-region and ranks among Africa's largest consumer markets. As a gateway to 15 smaller West African countries and a net importer of equipment, Nigeria can be a very rewarding market for U.S. companies that take the time and effort to understand its complex market conditions and opportunities, find the right partners and clients, and take a long-term approach to market development.

Nigeria ranks as Africa's largest oil producer and the twelfth largest in the world, producing high-value, low-sulfur content crude oil. A five-year-long effort to reform Nigeria's oil and gas legal framework has created uncertainty, delaying billions of dollars in potential investment in this sector. The Nigerian National Assembly is reviewing the most recent version of a Petroleum Industry Bill (PIB), which seeks to incorporate and update 16 different laws that regulate the sector. However, international oil companies operating in Nigeria have expressed concern that this latest version of the PIB would boost GON royalty and tax revenues to a level that makes new investment unprofitable. In contrast, the GON has argued that the PIB reflects current internationally-accepted industry contract standards.

In April 2010, Nigeria signed into law the Nigerian Oil and Gas Industry Content Development Act, which we refer to as the local content law. Commerce in collaboration with the USG interagency has worked to encourage Nigeria to ensure that it is in compliance with their World Trade Organization (WTO) obligations. The law was designed to encourage Nigerian participation in the oil and gas industry. The Government of Nigeria (GON) estimates that $8 billion is spent annually in the country's petroleum industry and approximately five percent is retained in Nigeria. The local content law's stated purpose is to include more Nigerians in this sector and increase significantly economic links to the Nigerian private sector. To accomplish this, the local content law includes provisions regarding Nigerian content (goods and services), operations and transactions in the petroleum industry and the functions of the Nigerian Content Division (NCD), and the Nigerian National Petroleum Corporation (NNPC).

Over the next two to three years, U.S. exporters of power generation, transmission and distribution equipment, and services will have significant trade opportunities in Nigeria. The GON recently announced that Nigeria requires more than $3.5 billion to improve its power generation, transmission, and distribution capacity from less than 5000 MW to 20,000 MW by 2016. U.S. exporters of electrical components and parts have growth opportunities here as well.

In 2013, the Nigerian government completed the privatization of 11 electricity distribution and six generation companies, with a total value of $2.6 billion. Investment in distribution assets will be required to address major issues facing the newly-privatized utilities, including reducing technical, commercial, and collection losses from a current estimated of 40% down to 10–15%. Near-term opportunities in Nigeria's distribution sector exist for providers of basic infrastructure equipment, services, and monitoring; metering, billing and collection software, systems, and solutions; and utility IT systems. Over the medium-term, the distribution utilities are also looking to deploy GIS and SCADA systems for the mapping, monitoring and control of their networks, as well smart grid technologies and applications like Distribution Automation, Demand Side Management, and Outage Management Systems.

Nigeria is also one of the most promising export markets for ethanol. Nigeria has a policy of blending 10 percent ethanol with gasoline; it is not however a mandate. The Organization for Economic and Cooperation Development estimates that consumption of ethanol in Nigeria will increase about 25 percent from 2013 to 2015. As Africa's largest oil producer, Nigeria is in good position logistically to export blended gasoline or even pure ethanol to other countries in Africa, many of whom have ethanol blending mandates. Trade data indicates that Nigeria exported $4.3 million in ethanol in 2012, including a large amount to Ghana. In recent years, Chinese investment in the Nigerian biofuels industry (ethanol and biodiesel) has soared.

According to Nigeria's National Bureau of Statistics (NBS), imports from Asia accounted for 41% of Nigeria's imports in 2012, while imports from Europe and America accounted for 26.5% and 25.3% respectively. NBS reports that imports are dominated by machinery, transport equipment, manufactured goods, and commodities.

Domestic currency commercial lending interest rates remain very high (ranging from 20 to 35 percent), despite Government efforts to lower them. This is fueling demand for U.S. Ex-Im Bank's financing and credit facilities by Nigerian importers. As of December 2012, Ex-Im Bank's credit exposure in Nigeria exceeded $178 million.

The official exchange rate of the Naira to the dollar currently fluctuates between 155 and 160 (2012 average exchange rate N156.8:$1).

Mission Goals

This mission will demonstrate the United States' commitment to a sustained economic partnership in West Africa. The mission's purpose is to

support the business development goals of U.S. energy firms as they construct a firm foundation for future business in West Africa and specifically aims to:

- Assist in identifying potential partners and strategies for U.S. companies to gain access to each market for energy and power generation products and services.
- Confirm U.S. Government support for the activities of U.S. businesses in each market and to provide access to senior decision makers in the Ghanaian and Nigerian governments.
- Listen to the needs, suggestions and experience of individual participants to help shape appropriate U.S. Government positions regarding U.S. business interests in the region.
- Organize private and focused events with local business and association leaders capable of becoming partners and clients of U.S. firms as they develop their business in the region.
- Assist development of competitive strategies and market access with high level information gathering from private and public-sector leaders.

Mission Scenario

The mission will stop in Accra, Ghana and Lagos and Abuja, Nigeria. In each country, participants will meet with pre-screened potential agents, distributors, and representatives, as well as other business partners and government officials. They will also attend market briefings by U.S. Embassy officials, as well as networking events offering further opportunities to speak with local business and industry decision-makers.

Proposed Time Table

Sunday, May 18	Accra, Ghana	Business development mission Orientation. U.S. Government Trade Finance Briefing. Commercial Opportunity Overview. Country Team Briefing. Welcome Dinner.
Monday, May 19	Accra, Ghana	Industry Briefings/Roundtable Discussions. One-on-One Business Appointments. Public Speech. Networking Reception.
Tuesday, May 20	Accra, Ghana	Industry Briefings/Roundtable Discussions. One-on-One Business Appointments.
Wednesday, May 21	Lagos, Nigeria	Travel to Lagos, Nigeria. Commercial Opportunity Overview. Country Team Briefing. Government Meetings. One-on-One Business Appointments. Networking Reception.
Thursday, May 22	Lagos, Nigeria Abuja, Nigeria	Government Meetings. One-on-One Business Appointments. Public Speech. Travel to Abuja, Nigeria. Networking Reception.
Friday, May 23	Abuja, Nigeria	Government Meetings. One-on-One Business Appointments. Public Speech. Wrap-up Discussion. Closing Dinner.

Participation Requirements

All parties interested in participating in the Secretarial Energy Business Development Mission to West Africa must complete and submit an application package for consideration by the Department of Commerce. All applicants will be evaluated on their ability to meet certain conditions and best satisfy the selection criteria as outlined below. Approximately 20–25 companies will be selected to participate in the mission from the applicant pool. U.S. companies doing business in Ghana and Nigeria, as well as U.S. companies seeking to enter these markets for the first time may apply.

Fees and Expenses

After a company has been selected to participate on the mission, a payment to the Department of Commerce in the form of a participation fee is required. The fee schedule for each mission is below:

- $11,000 for large firms
- $9,000 for a small or medium-sized enterprises (SMEs) [1]
- $2,750 each additional firm representative (large firm or SME)

Expenses for travel, lodging, most meals, and incidentals will be the responsibility of each mission participant.

Conditions of Participation

An applicant must submit a completed and signed mission application and supplemental application materials, including adequate information on the company's products and/or services, primary market objectives, and goals for participation. If the Department of Commerce receives an incomplete application, the Department may reject the application, request additional information, or take the lack of information into account when evaluating the applications. Each applicant must also:

- Certify that the products and services it seeks to export through the

[1] An SME is defined as a firm with 500 or fewer employees or that otherwise qualifies as a small business under SBA regulations (see *http://www.sba.gov/services/contracting opportunities/sizestandardstopics/index.html*). Parent companies, affiliates, and subsidiaries will be considered when determining business size. The dual pricing reflects the Commercial Service's user fee schedule that became effective May 1, 2008 (see *http://www.export.gov/newsletter/march2008/initiatives.html* for additional information).

mission are either produced in the United States, or, if not, marketed under the name of a U.S. firm and have at least 51% U.S. content. In cases where the U.S. content does not exceed 50%, especially where the applicant intends to pursue investment and major project opportunities, the following factors, may be considered in determining whether the applicant's participation in the business development mission is in the U.S. national interest:

○ U.S. materials and equipment content;

○ U.S. labor content;

○ Repatriation of profits to the U.S. economy;

○ Potential for follow-on business that would benefit the U.S. economy;

• Certify that the export of the products and services that it wishes to export through the mission would be in compliance with U.S. export controls and regulations;

• Certify that it has identified to the Department of Commerce for its evaluation any business pending before the Department of Commerce that may present the appearance of a conflict of interest;

• Certify that it has identified any pending litigation (including any administrative proceedings) to which it is a party that involves the Department of Commerce; and

• Sign and submit an agreement that it and its affiliates (1) have not and will not engage in the bribery of foreign officials in connection with a company's/participant's involvement in this mission, and (2) maintain and enforce a policy that prohibits the bribery of foreign officials.

Selection Criteria for Participation

Selection will be based on the following criteria, listed in decreasing order of importance:

• Suitability of a company's products or services to the target markets and the likelihood of a participating company's increased exports or business interests in the target markets as a result of this mission;

• Consistency of company's products or services with the scope and desired outcome of the mission's goals;

• Demonstrated export experience in the target markets and/or other foreign markets;

• Current or pending major project participation; and

• Rank/seniority of the designated company representative.

Additional factors, such as diversity of company size, type, location, and demographics, may also be considered during the review process.

Referrals from political organizations and any documents containing references to partisan political activities (including political contributions) will be removed from an applicant's submission and not considered during the selection process.

Timeframe for Recruitment and Applications

Mission recruitment will be conducted in an open and public manner, including publication in the **Federal Register** (*http://www.gpoaccess.gov/fr*), posting on ITA's business development mission calendar (*http://export.gov/trademissions*) and other Internet Web sites, press releases to general and trade media, direct mail, broadcast fax, notices by industry trade associations and other multiplier groups, and publicity at industry meetings, symposia, conferences, and trade shows.

Recruitment will begin immediately and conclude no later than March 14, 2014. Applications can be completed on-line at the Africa Energy Mission Web site at *http://www.export.gov/AfricaEnergyMission2014* or can be obtained by contacting the U.S. Department of Commerce Office of Business Liaison (202–482–1360 or *businessLiaison@doc.gov*).

The application deadline is Friday, March 14, 2014. Completed applications should be submitted to the Office of Business Liaison. Applications received after Friday, March 14, 2014, will be considered only if space and scheduling constraints permit.

How To Apply

Applications can be downloaded from the business development mission Web site (*http://export.gov/AfricaEnergyMission2014*) or can be obtained by contacting the Office of Business Liaison (see below). Completed applications should be submitted to the Office of Business Liaison at (email: *businessliaison@doc.gov* or fax: 202–482–4054).

Contacts

General Information and Applications: The Office of Business Liaison, 1401 Constitution Avenue NW., Room 5062, Washington, DC 20230, Tel: 202–482–1360, Fax: 202–482–4054, Email: *BusinessLiaison@doc.gov.*

Elnora Moye,

Trade Program Assistant.

[FR Doc. 2014–01521 Filed 1–27–14; 8:45 am]

BILLING CODE 3510–DR–P

DEPARTMENT OF COMMERCE

International Trade Administration

Trade Mission to the Caribbean Region in Conjunction With the Trade Americas—Opportunities in the Caribbean Region Conference, June 8–12, 2014

AGENCY: International Trade Administration, Commerce.

ACTION: Notice.

Mission Description

The United States Department of Commerce, International Trade Administration, is organizing a trade mission to the Caribbean region, in conjunction with the Department of Commerce's Trade Americas—Opportunities in the Caribbean Region Conference in Santo Domingo, Dominican Republic. Trade mission participants will arrive in Santo Domingo on June 8, and will attend the Trade Americas—Opportunities in the Caribbean Region Conference on June 9. Following the morning session of the conference, trade mission participants will participate in one-on-one consultations with U.S. and Foreign Commercial Service (US&FCS) Commercial Officers and/or Economic/Commercial Officers from the following U.S. Embassies in the Caribbean region: the Bahamas, Barbados and the Eastern Caribbean, Dominican Republic, Haiti, Jamaica, and Trinidad and Tobago. The following day, June 10, trade mission participants will engage in business-to-business appointments with Dominican companies. A limited number of trade mission participants will then travel to either the Bahamas, Barbados, Haiti, Jamaica, or Trinidad and Tobago (choosing only one market) for optional additional business-to-business appointments, each of which will be with a pre-screened potential buyer, agent, distributor or joint-venture partner.

The Department of Commerce's Trade Americas—Opportunities in the Caribbean Region Conference will focus on regional and industry-specific sessions, market entry strategies, logistics and trade financing resources as well as pre-arranged one-one-one consultations with US&FCS Commercial Officers and/or Department of State Economic/Commercial Officers with expertise in commercial markets throughout the region.

The mission is open to U.S. companies from a cross section of industries with growing potential in the Caribbean region, but is focused on U.S. companies in best prospects sectors

such as Construction Equipment/Road Building Machinery, Medical Equipment and Devices/ Pharmaceuticals, ICT, Energy Equipment and Services, and Safety and Security Equipment.

The combination of participation in the Trade Americas—Opportunities in the Caribbean Region Conference and business-to-business matchmaking appointments in the Dominican Republic and one of the other optional Caribbean countries, will provide participants with access to substantive information about and strategies for entering or expanding their business across the Caribbean region.

Commercial Setting

Bahamas

The Bahamian economy is driven by tourism and financial services. The Bahamas imports nearly all of its food and manufactured goods from the United States, and U.S. goods and services tend to be favored by Bahamians due to cultural similarities and exposure to U.S. advertising. Due to its dependence on tourism imports from the United States and trade with the United States, the Bahamian economy is notably affected by U.S. economic performance. There are no significant barriers to trade in the Bahamas. The Bahamas is currently reviewing proposals for alternative energy source projects. Best prospects sectors for U.S. exports include: Hotel Equipment; Franchise; Construction Equipment and Supplies; Consumer Products; and Drugs and Pharmaceutical Products.

Barbados

Barbados enjoys one of the highest per capita incomes in the region and an investment climate which benefits from its political stability and stable institutions. Financial and information services are important foreign exchange earners and thrive from having the same time zone as eastern U.S. financial centers and a highly educated workforce. A renewable energy bill that will open up the possibility of private energy production and selling back to the grid is expected to be passed this year. The tourism sector is expected to be upgraded through several ongoing construction projects. Best Prospects are Construction and Building Products; Consumer Goods; Agricultural Products and Equipment; Renewable Energy Technologies and Equipment; and Hotel and Restaurant Equipment.

Dominican Republic

With a population of 10 million consumers and a GDP of $59 billion, the Dominican Republic (DR) is the ninth largest economy in Latin America and the second largest in the Caribbean region. The United States represents, by far, the DR's largest trading partner. 43.6% of imports into the DR are of U.S. origin. There is extremely high receptivity to U.S. goods and services and U.S. product standards are generally accepted. Since the entry into force of the Dominican Republic-Central America-United States Free Trade Agreement (CAFTA–DR) in March 2007, bilateral trade has grown at a robust pace. By 2012, U.S. exports to the DR had grown by 33% over the pre-CAFTA days of 2006.

The strength of the trade relationship stems from close geographic proximity and the historic cultural and personal ties that many Dominicans have with the United States. Best prospect sectors for U.S. exports include: Automotive Parts, Hotel and Restaurant Equipment, Travel and Tourism, Safety and Security Equipment; Renewable Energy Technologies and Equipment; Telecommunications Services and Equipment; Printing and Graphic Arts Products and Equipment; Computers and Peripherals; Medical Equipment; and Construction and Building Products.

Haiti

The United States is Haiti's chief trading partner, with a 40% share of Haiti's import market. Haiti's economy is unique in the Caribbean region, with a large population of 10 million people but a relatively small $7.9 billion GDP. Haiti's geographic proximity and historically strong links with the United States contribute to a strong market for U.S. exports. Haiti imports more than 70% of market goods, and American businesses continue to do well in finding local buyers and distributors. Haiti has the lowest import tariffs in the Caribbean region. Best prospects sectors for U.S. exports include: Apparel and Textile; Machinery and Transport; Automotive Sector and Parts; Telecommunications Services and Equipment; Electrical Power Systems; Tourism; and Construction and Building Products/Equipment.

Jamaica

The United States is Jamaica's largest trading partner, accounting for almost 40% of Jamaica's total trade. A small economy of 2.8 million people and $15 billion GDP, Jamaica's geographic proximity and historically strong links with the United States have encouraged a wide range of U.S. investors and exporters to enter the Jamaican market. Best prospects sectors for U.S. exports include: Agriculture; Pharmaceuticals/ Chemicals; Machinery/Transportation Equipment; Consumer Products and Tourism; ICT; Automobiles; Energy Production; and Telecommunications Services and Equipment.

Trinidad and Tobago

The United States is Trinidad and Tobago's largest trading partner, accounting for 33% of Trinidad and Tobago's total imports and purchasing 44% of its exports. A small country of 1.2 million people and a per capita GDP of $20,000, one of the highest in the region, Trinidad and Tobago's economy is dominated by the energy sector. Trinidad and Tobago's geographic proximity and strong links with the United States have encouraged a wide range of U.S. investors and exporters to enter Trinidad and Tobago's market. Best prospects sectors for U.S. exports include: Oil and Gas Field Machinery and Services; Food Processing and Packaging; Automotive Parts and Services; Telecommunications; Computers and Peripherals; Construction; Tourism; and Maritime Industries.

The foregoing analysis of export opportunities in the Caribbean Region is not intended to be exhaustive, but illustrative of the many opportunities available to U.S. businesses. Applications from U.S. companies will be considered and evaluated by the U.S. Department of Commerce on their market potential in the Caribbean region.

Mission Goals

The goal of the mission is to help participating U.S. companies find potential partners, agents, distributors, and joint venture partners in the Bahamas, Barbados, Dominican Republic, Haiti, Jamaica, and Trinidad and Tobago, laying the foundation for successful long-term ventures to take advantage of market opportunities in the Caribbean region. During the mission, the delegation will have access to US&FCS Commercial Officers, Commercial Specialists, and Department of State Economic/ Commercial Officers from the markets in the region. They will learn about the many business opportunities in the Caribbean region, and gain first-hand market exposure. Trade mission participants already doing business in the Caribbean will have the opportunity to further advance business relationships and explore new opportunities.

Mission Scenario

The mission will include registration for the Trade Americas—Opportunities in the Caribbean Region Conference, including conference materials and admission to all sessions and networking events with industry and government representatives; industry and country market briefings; and logistical support. It also includes one-on-one appointments with pre-screened potential business partners in the Dominican Republic and one other Caribbean market.

U.S. delegation members will arrive in Santo Domingo, Dominican Republic on June 8, 2014. On the morning of June 9, trade mission participants will attend the Trade Americas—Opportunities in the Caribbean Region Conference, featuring regional and industry-specific sessions, market entry strategies, logistics and trade financing resources. On the afternoon of June 9, mission participants will engage in pre-arranged one-on-one consultations with US&FCS Commercial Officers and/or Department of State Economic/Commercial Officers with expertise in commercial markets throughout the region, as well as business service providers. On June 10, mission participants will stay in the Dominican Republic for business-to-business meetings. On June 11, a limited number of mission participants will travel to the Bahamas, Barbados, Haiti, Jamaica or Trinidad and Tobago (choosing one) for additional business-to-business meetings to be held on June 12.

Mission Timetable

June 8, 2014 Travel Day/Arrival in Dominican Republic
June 9, 2014 Dominican Republic
Morning: Registration and Trade Americas—Opportunities in the Caribbean Region Conference
Afternoon: U.S. Embassy Officer Consultations
Evening: Ambassador's Networking Reception
June 10, 2014 Dominican Republic
Business-to-Business Meetings

Optional

June 11–12, 2014 Business-to-Business Meetings in (choice of one market):
Option (A) Bahamas
Option (B) Barbados
Option (C) Haiti
Option (D) Jamaica
Option (E) Trinidad and Tobago
June 13, 2014 Travel Day

Participation Requirements

All parties interested in participating in the U.S. Department of Commerce Trade Mission to the Caribbean Region must complete and submit an application package for consideration by the Department of Commerce. All applicants will be evaluated on their ability to meet certain conditions and best satisfy the selection criteria as outlined below.

A minimum of 20 and a maximum of 30 companies will be selected to participate in the mission from the applicants on a rolling basis. During the registration process, applicants will be able to select their markets of choice and will receive a brief market assessment for each selected market. All selected participants will attend business-to-business meetings in the Dominican Republic. For those companies seeking to participate in additional business-to-business meetings in another market on June 12, we will select based on market suitability. The number of companies that may be selected for each country are as follows: 2–3 companies for the Bahamas; 2 companies for Barbados; 4–6 companies for Haiti; 4–6 companies for Jamaica; and 3 companies for Trinidad and Tobago. U.S. companies already doing business in, or seeking to enter the market in the Bahamas, Barbados, Dominican Republic, Haiti, Jamaica, and Trinidad and Tobago for the first time may apply.

Fees and Expenses

After a company has been selected to participate on the mission, a payment to the Department of Commerce in the form of a participation fee is required.

For business-to-business meetings in the Dominican Republic only (not traveling to an additional trade mission country), the participation fee will be $1,800 for a small or medium-sized enterprise (SME)* and $2,800 for large firms*.

For business-to-business meetings in the Dominican Republic and one other market, i.e. the Bahamas OR Barbados OR Haiti OR Jamaica OR Trinidad and Tobago, the participation fee will be $2,500 for a small or medium-sized enterprise (SME) [1]* and $3,500 for large firms*.

The mission registration fee also includes the Trade Americas—Opportunities in the Caribbean Region Conference registration fee of $400 for one participant from each firm, market assessment for the region, market briefings, networking reception, lunch during the conference and coffee breaks, interpreters and transportation associated with the conference, and U.S. Embassy officer consultations. There will be a $200 fee for each additional firm representative (large firm or SME) that wishes to participate in business-to-business meetings after the conference on Tuesday in the Dominican Republic and on Thursday in any of the markets selected.

Expenses for travel, lodging, most meals, and incidentals will be the responsibility of each mission participant.

Conditions for Participation

- An applicant must submit a completed and signed mission application and supplemental application materials, including adequate information on the company's products and/or services, primary market objectives, and goals for participation. If the Department of Commerce receives an incomplete application, the Department may reject the application, request additional information, or take the lack of information into account when evaluating the applications.
- Each applicant must also certify that the products and services it seeks to export through the mission are either produced in the United States, or, if not, marketed under the name of a U.S. firm and have at least 51% U.S. content of the value of the finished product or service.

Selection Criteria for Participation

Selection will be based on the following criteria:

- Suitability of the company's products or services to each of the markets the company has expressed an interest in visiting as part of this trade mission.
- Company's potential for business in each of the markets the company has expressed an interest in visiting as part of this trade mission.
- Consistency of the applicant's goals and objectives with the stated scope of the mission.

Referrals from political organizations and any documents containing references to partisan political activities (including political contributions) will be removed from an applicant's submission and not considered during the selection process.

[1] An SME is defined as a firm with 500 or fewer employees or that otherwise qualifies as a small business under SBA regulations (see *http://www.sba.gov/services/contracting opportunities/sizestandardstopics/index.html*). Parent companies, affiliates, and subsidiaries will be considered when determining business size. The dual pricing reflects the Commercial Service's user fee schedule that became effective May 1, 2008 (see *http://www.export.gov/newsletter/march2008/initiatives.html* for additional information).

Timeframe for Recruitment and Applications

Mission recruitment will be conducted in an open and public manner, including publication in the **Federal Register**, posting on the Commerce Department trade mission calendar on *www.export.gov,* the Trade Americas Web page at *http://export.gov/tradeamericas/index.asp,* and other Internet Web sites, press releases to the general and trade media, direct mail and broadcast fax, notices by industry trade associations and other multiplier groups and announcements at industry meetings, symposia, conferences, and trade shows.

Recruitment for the mission will begin immediately and conclude no later than Friday, April 4, 2014. The U.S. Department of Commerce will review applications and make selection decisions on a rolling basis until the maximum of 30 participants are selected. After April 4, 2014, companies will be considered only if space and scheduling constraints permit.

U.S. Trade Americas Team Contact Information

David Royce, U.S. Export Assistance Center—Fort Worth, TX, *David.Royce@trade.gov,* Tel: 817–684–5354.

Diego Gattesco, U.S. Export Assistance Center—Wheeling, WV, *Diego.Gattesco@trade.gov,* Tel: 304–243–5493.

Caribbean Region Contact Information

Isabella Cascarano, Senior Commercial Officer, U.S. Commercial Service—Dominican Republic, *Isabella.Cascarano@trade.gov.*

Maria Elena Portorreal, Regional Commercial Specialist, U.S. Commercial Service—Dominican Republic, *Maria.Portorreal@trade.gov.*

Elnora Moye,

Trade Program Assistant.

[FR Doc. 2014–01519 Filed 1–27–14; 8:45 am]

BILLING CODE 3510–DR–P

DEPARTMENT OF COMMERCE

National Oceanic and Atmospheric Administration

Proposed Information Collection; Comment Request; Alaska Region Crab Permits

AGENCY: National Oceanic and Atmospheric Administration, Commerce.

ACTION: Notice.

SUMMARY: The Department of Commerce, as part of its continuing effort to reduce paperwork and respondent burden, invites the general public and other Federal agencies to take this opportunity to comment on proposed and/or continuing information collections, as required by the Paperwork Reduction Act of 1995.

DATES: Written comments must be submitted on or before March 31, 2014.

ADDRESSES: Direct all written comments to Jennifer Jessup, Departmental Paperwork Clearance Officer, Department of Commerce, Room 6616, 14th and Constitution Avenue NW., Washington, DC 20230 (or via the Internet at *JJessup@doc.gov*).

FOR FURTHER INFORMATION CONTACT: Requests for additional information or copies of the information collection instrument and instructions should be directed to Patsy A. Bearden, (907) 586–7008 or *patsy.bearden@noaa.gov.*

SUPPLEMENTARY INFORMATION:

I. Abstract

This request is for extension of a currently approved information collection.

The king and Tanner crab fisheries in the exclusive economic zone of the Bering Sea and Aleutian Islands, Alaska, are managed under the Fishery Management Plan for Bering Sea and Aleutian Islands King and Tanner Crabs (FMP). The North Pacific Fishery Management Council prepared the FMP under the Magnuson-Stevens Fishery Conservation and Management Act as amended in 2006. National Marine Fisheries Service (NMFS) manages the crab fisheries in the waters off the coast of Alaska under the FMP. Regulations implementing the FMP and all amendments to the Crab Rationalization Program (CR Program) appear at 50 CFR part 680. Program details are found at: *http://www.alaskafisheries.noaa.gov/regs/680/default.htm.*

The CR Program balances the interests of several groups who depend on the crab fisheries. The CR Program addresses conservation and management issues associated with the previous derby fishery, reduces bycatch and associated discard mortality, and increases the safety of crab fishermen by ending the race for fish. Share allocations to harvesters and processors, together with incentives to participate in fishery cooperatives, increases efficiencies, provides economic stability, and facilitates compensated reduction of excess capacities in the harvesting and processing sectors. Community interests are protected by Western Alaska Community Development Quota allocations and regional landing and processing requirements, as well as by several community protection measures.

The NMFS established the CR Program as a catch share program for nine crab fisheries in the BSAI, and assigned quota share (QS) to persons and processor quota share (PQS) to processors based on their historic participation in one or more of these nine crab fisheries during a specific period. The CR Program components include QS allocation, PQS allocation, individual fishing quota (IFQ) issuance, and individual processing quota (IPQ) issuance, quota transfers, use caps, crab harvesting cooperatives, protections for Gulf of Alaska groundfish fisheries, arbitration system, monitoring, economic data collection, and cost recovery fee collection.

II. Method of Collection

Respondents have a choice of either electronic or paper forms. Methods of submittal include online, email of electronic forms, mail, and facsimile transmission of paper forms.

III. Data

OMB Control Number: 0648–0514.

Form Number: None.

Type of Review: Regular submission (extension of a currently approved collection).

Affected Public: Individuals or households; business or other for-profit organizations.

Estimated Number of Respondents: 1,988.

Estimated Time per Response: Annual application for crab IFQ permit, application for Crab IPQ permit, application to become an eligible crab community organization (ECCO), 150 minutes each; application for an Annual Crab Harvesting Cooperative IFQ Permit, Right of first refusal (ROFR) contracts and waivers, 1 hour each; annual application for Crab Converted CPO QS and CPO IFQ and application for Registered Crab Receiver (RCR) Permit, BSAI Crab Rationalization Program Quota Share Beneficiary Designation Form, 30 minutes; application for Crab IFQ Hired Master Permit and application for Federal crab vessel permit (FCVP) 21 minutes each; application for eligibility to receive crab QS/IFQ or PQS/IPQ by transfer, application for transfer of crab IFQ, application for transfer of crab QS/IFQ to or from an ECCO, Application to transfer crab QS or PQS, application for Annual Exemption from Western Aleutian Islands Golden King Crab West Region Delivery Requirements, Community Impact Report or IPQ Holder Report (North or South Response Report), 2 hours each; ECCO Annual

report and appeal of denial to NMFS decisions, 4 hours each; application for transfer of IFQ between crab harvesting cooperatives, electronic, 5 minutes, non-electronic, 2 hours; application to Transfer Crab IPQ, electronic, 1 hour; non-electronic, 2 hours; CDQ notification of community representative, 5 hours; application for exemption from CR Crab North or South Region Delivery Requirements and North or South Region Delivery Exemption Report, 20 hours each.

Estimated Total Annual Burden Hours: 2,257.

Estimated Total Annual Cost to Public: $4,920 in recordkeeping/reporting costs.

IV. Request for Comments

Comments are invited on: (a) Whether the proposed collection of information is necessary for the proper performance of the functions of the agency, including whether the information shall have practical utility; (b) the accuracy of the agency's estimate of the burden (including hours and cost) of the proposed collection of information; (c) ways to enhance the quality, utility, and clarity of the information to be collected; and (d) ways to minimize the burden of the collection of information on respondents, including through the use of automated collection techniques or other forms of information technology.

Comments submitted in response to this notice will be summarized and/or included in the request for OMB approval of this information collection; they also will become a matter of public record.

Dated: January 22, 2014.

Gwellnar Banks,

Management Analyst, Office of the Chief Information Officer.

[FR Doc. 2014–01482 Filed 1–27–14; 8:45 am]

BILLING CODE 3510–22–P

DEPARTMENT OF COMMERCE

National Oceanic and Atmospheric Administration

Public Meeting on the Proposed Heeia Site for a National Estuarine Research Reserve in Hawaii

AGENCY: The Estuarine Reserves Division, Office of Ocean and Coastal Resource Management, National Ocean Service, National Oceanic and Atmospheric Administration, U.S. Department of Commerce.

ACTION: Public meeting notice.

SUMMARY: The Office of Planning, Hawaii Coastal Zone Management Program and the University of Hawaii with the support of the Estuarine Reserves Division of the Office of Ocean and Coastal Resource Management (OCRM), National Ocean Service (NOS), National Oceanic and Atmospheric Administration (NOAA), U.S. Department of Commerce, will hold a public meeting for the purpose of receiving comments on the preliminary recommendation that the Heeia estuary be proposed for designation as a National Estuarine Research Reserve in Hawaii.

DATES: The meeting will be held on February 27, 2014 at 5:30 p.m.

ADDRESSES: The meeting will be held at Governor Samuel Wilder King Intermediate School Dining Room, 46–155 Kamehameha Hwy, Kaneohe, HI 96744.

SUPPLEMENTARY INFORMATION: This will be the second public meeting held regarding the State's preliminary recommendation that the Heeia estuary in Kaneohe Bay, Oahu, be proposed for designation as a National Estuarine Research Reserve (NERR). A previous meeting was held on January 9, 2014. These meetings are held in compliance with NOAA regulations at 15 CFR Part 921 for the selection, designation and management of NERRs.

The views of interested persons and organizations on the proposed site recommendation are solicited, and may be expressed to the State of Hawaii orally during the meeting and/or in written statements to the Office of Planning, Coastal Zone Management Program, Attn: NERRS, P.O. Box 2359, Honolulu, HI 96804. An informational presentation on the Heeia Estuary and the National Estuarine Research Reserve System (NERRS) is scheduled for 5:30 p.m. All comments received at the meeting will be considered in a formal nomination by the state to NOAA. All comments provided to NOAA will be shared with the State of Hawaii as part of the site selection process.

The NERRS is a federal-state partnership that is administered by the National Oceanic and Atmospheric Administration (NOAA). The system protects more than 1.3 million acres of estuarine habitat for long-term research, monitoring, education and stewardship throughout the coastal United States. Established by the Coastal Zone Management Act of 1972, as amended, 16 U.S.C. 1451–1466 each reserve is managed by a lead state agency or university, with input from local partners. NOAA provides funding and national programmatic guidance.

The NERR site selection effort is a culmination of several years of local, grassroots support for a Hawaii NERR. The recommendation of the Heeia site follows a public solicitation and site proposal evaluation process. Federal, state, and county agency representatives and estuarine experts evaluated site proposals and recommended to the State that Heeia be considered as the preferred site.

FOR FURTHER INFORMATION CONTACT: Ms. Erica H. Seiden, Acting Chief, NOAA's Estuarine Reserves Division, Office of Ocean and Coastal Resource Management, National Ocean Service, NOAA, 1305 East West Highway, N/ORM2, Silver Spring, MD 20910. Phone: 301–563–1172. Please email comments to: *hawaii.nerr.comments@noaa.gov* by March 7, 2014.

Persons with disabilities please contact Leo Asuncion at the Office of Planning, Coastal Zone Management Program by February 18, 2014 to make arrangements. Phone: 808–587–2846.

Dated: January 17, 2014.

Christopher C. Cartwright,

Associate Assistant Administrator for Management and CFO/CAO, Ocean Services and Coastal Zone Management.

[FR Doc. 2014–01578 Filed 1–27–14; 8:45 am]

BILLING CODE 3510–22–P

DEPARTMENT OF COMMERCE

United States Patent and Trademark Office

Submission for OMB Review; Comment Request

The United States Patent and Trademark Office (USPTO) will submit to the Office of Management and Budget (OMB) for clearance the following proposal for collection of information under the provisions of the Paperwork Reduction Act (44 U.S.C. chapter 35).

Agency: United States Patent and Trademark Office (USPTO).

Title: Native American Tribal Insignia Database.

Form Number(s): None.

Agency Approval Number: 0651–0048.

Type of Request: Extension of a currently approved collection.

Burden: 3 hours annually.

Number of Respondents: 3 responses per year.

Avg. Hours per Response: The USPTO estimates that a recognized Native American tribe will require an average of 45 minutes (0.75 hours) to complete a request to record an official insignia, including time to prepare the

appropriate documents and submit the completed request to the USPTO.

Needs and Uses: The Trademark Law Treaty Implementation Act of 1998 (Pub. L. 105–330, 302, 112 Stat. 3071) required the USPTO to study issues surrounding the protection of the official insignia of federally and state-recognized Native American tribes under trademark law. At the direction of Congress, the USPTO created a database containing the official insignia of recognized Native American tribes.

The USPTO database of official tribal insignias provides evidence of what a federally or state-recognized Native American tribe considers to be its official insignia. The database thereby assists trademark examining attorneys in their examination of applications for trademark registration by serving as a reference for determining the registrability of a mark that may falsely suggest a connection to the official insignia of a Native American tribe. The entry of an official insignia into the database does not confer any rights to the tribe that submitted the insignia, and entry is not the legal equivalent of registering the insignia as a trademark under 15 U.S.C. 1051 *et seq.*

This information collection is used by the USPTO to enter an official insignia submitted by a federally or state-recognized Native American tribe into the database. There are no forms associated with this collection.

Affected Public: Tribal governments.

Frequency: On occasion.

Respondent's Obligation: Required to obtain or retain benefits.

OMB Desk Officer: Nicholas A. Fraser, email: *Nicholas_A._Fraser@omb.eop.gov.*

Once submitted, the request will be publicly available in electronic format through the Information Collection Review page at *www.reginfo.gov.*

Paper copies can be obtained by:

- *Email: InformationCollection@uspto.gov.* Include ''0651–0048 copy request'' in the subject line of the message.
- *Mail:* Susan K. Fawcett, Records Officer, Office of the Chief Information Officer, United States Patent and Trademark Office, P.O. Box 1450, Alexandria, VA 22313–1450.

Written comments and recommendations for the proposed information collection should be sent on or before February 27, 2014 to Nicholas A. Fraser, OMB Desk Officer, via email to *Nicholas_A._Fraser@omb.eop.gov,* or by fax to 202–395–5167, marked to the attention of Nicholas A. Fraser.

Dated: January 23, 2014.

Susan K. Fawcett,

Records Officer, USPTO, Office of the Chief Information Officer.

[FR Doc. 2014–01522 Filed 1–27–14; 8:45 am]

BILLING CODE 3510–16–P

DEPARTMENT OF COMMERCE

Patent and Trademark Office

Response to Office Action and Voluntary Amendment Forms

ACTION: Proposed collection; comment request.

SUMMARY: The United States Patent and Trademark Office (USPTO), as part of its continuing effort to reduce paperwork and respondent burden, invites the general public and other Federal agencies to comment on this continuing information collection, as required by the Paperwork Reduction Act of 1995, Public Law 104–13 (44 U.S.C. 3506(c)(2)(A)).

DATES: Written comments must be submitted on or before March 31, 2014.

ADDRESSES: You may submit comments by any of the following methods:

- *Email: InformationCollection@uspto.gov.* Include ''0651–0050 comment'' in the subject line of the message.
- *Mail:* Susan K. Fawcett, Records Officer, Office of the Chief Information Officer, United States Patent and Trademark Office, P.O. Box 1450, Alexandria, VA 22313–1450.
- *Federal Rulemaking Portal: http://www.regulations.gov.*

FOR FURTHER INFORMATION CONTACT: Requests for additional information should be directed to Catherine Cain, Attorney Advisor, Office of the Commissioner for Trademarks, United States Patent and Trademark Office, P.O. Box 1450, Alexandria, VA 22313–1450, by telephone at 571–272–8946, or by email at *Catherine.Cain@uspto.gov.* Additional information about this collection is also available at *http://www.reginfo.gov* under ''Information Collection Review.''

SUPPLEMENTARY INFORMATION:

I. Abstract

This collection of information is required by the Trademark Act, 15 U.S.C. 1051 et seq., which provides for the federal registration of trademarks, service marks, collective trademarks and service marks, collective membership marks, and certification marks. Individuals and businesses that use such marks, or intend to use such marks, in interstate commerce may file an application to register their marks with the United States Patent and Trademark Office (USPTO). In some cases, the USPTO issues Office Actions to applicants who have applied for a trademark application, requesting additional information that was not provided with the initial submission but is required before the issuance of a registration. Also, the USPTO may determine that a mark is not entitled to registration, pursuant to one or more provisions of the Trademark Act. In such cases, the USPTO will issue an Office Action advising the applicant of the refusal to register the mark. Applicants reply to these Office Actions by providing the required information and/or by putting forth legal arguments as to why the refusal of registration should be withdrawn.

The USPTO administers the Trademark Act through Chapter 37 of the Code of Federal Regulations. These rules allow the USPTO to request and receive information required to process applications. These rules also allow applicants to submit certain amendments to their applications.

Applicants may also supplement their applications and provide further information by filing a Voluntary Amendment Not in Response to USPTO Office Action/Letter, a Request for Reconsideration after Final Office Action, a Post-Publication Amendment, a Petition to Amend Basis Post-Publication, and a Suspension Inquiry or Letter of Suspension, or by submitting a Substitute Trademark/Servicemark, Substitute Certification Mark, or Substitute Collective Membership Mark application.

Thus, this collection includes information that was not submitted with the initial application and is needed by the USPTO to review applications for trademark registration.

II. Method of Collection

The forms in this collection are available in electronic format through the Trademark Electronic Application System (TEAS), which may be accessed on the USPTO Web site. TEAS Global Forms are available for the items where a TEAS form with dedicated data fields is not yet available. Applicants may also submit the information in paper form by mail, fax, or hand delivery.

III. Data

OMB Number: 0651–0050.

Form Number(s): PTO 1771, 1822, 1957, 1960, and 1966.

Type of Review: Extension of a currently approved collection.

Affected Public: Businesses or other for profits; not-for-profit institutions.

Estimated Number of Respondents: 271,783 responses per year.

Estimated Time per Response: The USPTO estimates that it will take the public from 10 to 40 minutes (0.17 to 0.67 hours), depending on the complexity of the situation, to gather the necessary information, prepare the appropriate documents, and submit the information required for this collection.

Estimated Total Annual Respondent Burden Hours: 132,122 hours per year.

Estimated Total Annual Respondent Cost Burden: $51,395,458. The USPTO expects that the information in this collection will be prepared by attorneys at an estimate rate of $389 per hour. Therefore, the USPTO estimates that the respondent cost burden for this collection will be approximately $51,395,458 per year.

Item	Estimated time for response (minutes)	Estimated annual responses	Estimated annual burden hours
Response to Office Action (TEAS)	30	218,540	109,270
Response to Office Action (Paper)	35	10,927	6,338
Substitute Trademark/Servicemark Application, Principal Register (TEAS Global)	30	1	1
Substitute Trademark/Servicemark Application, Principal Register (Paper)	30	1	1
Substitute Certification Mark (TEAS Global)	30	1	1
Substitute Certification Mark (Paper)	30	1	1
Substitute Collective Membership Mark (TEAS Global)	30	1	1
Substitute Collective Membership Mark (Paper)	30	1	1
Substitute Collective Trademark/Servicemark (TEAS Global)	30	1	1
Substitute Collective Trademark/Servicemark (Paper)	30	1	1
Voluntary Amendment Not in Response to USPTO Office Action/Letter (TEAS)	20	11,000	3,630
Voluntary Amendment Not in Response to USPTO Office Action/Letter (Paper)	25	224	94
Request for Reconsideration After Final Office Action (TEAS)	35	15,000	8,700
Request for Reconsideration After Final Office Action (Paper)	40	625	419
Post-Publication Amendment (TEAS)	25	2,900	1,218
Post-Publication Amendment (Paper)	30	59	30
Petition to Amend Basis Post-Publication (TEAS Global)	15	3,000	750
Petition to Amend Basis Post-Publication (Paper)	20	125	41
Response to Suspension Inquiry or Letter of Suspension (TEAS)	10	9,000	1,530
Response to Suspension Inquiry or Letter of Suspension (Paper)	15	375	94
Totals	.....	271,783	132,122

Estimated Total Annual (Non-hour) Respondent Cost Burden: $5,916. There are no capital start-up, maintenance, or record keeping costs associated with this information collection, nor are there filing fees. However, this collection does have annual (non-hour) costs in the form of postage costs.

Customers incur postage costs when submitting non-electronic information to the USPTO by mail through the United States Postal Service. The USPTO expects that the majority (roughly 98%) of the paper forms are submitted to the USPTO via first-class mail. The USPTO estimates that these submissions will typically weigh approximately one ounce and that the first-class postage rate for these submissions is 49 cents.

Item	Responses (a)	Postage costs ($) (b)	Total (non-hour) cost burden (a × b) = (c)
Response to Office Action	10,708	0.49	5,247.00
Substitute Trademark/Servicemark Application, Principal Register	1	0.49	1.00
Substitute Certification Mark	1	0.49	1.00
Substitute Collective Membership Mark	1	0.49	1.00
Substitute Collective Trademark/Servicemark	1	0.49	1.00
Voluntary Amendment Not in Response to USPTO Office Action/Letter	220	0.49	108.00
Request for Reconsideration after Final Office Action	613	0.49	300.00
Post-Publication Amendment	58	0.49	28.00
Petition to Amend Basis Post-Publication	123	0.49	60.00
Response to Suspension Inquiry or Letter of Suspension	368	0.49	169.00
Totals	12,094	.....	5,916.00

There are no filing fees associated with this collection.

The USPTO estimates that the total (non-hour) respondent cost burden for this collection in the form of postage costs is $5,916 per year.

IV. Request for Comments

Comments submitted in response to this notice will be summarized and/or included in the request for OMB approval. All comments will become a matter of public record.

The USPTO is soliciting public comments to: (a) Evaluate whether the proposed collection of information is necessary for the proper performance of the functions of the agency, including whether the information shall have practical utility; (b) Evaluate the

accuracy of the agency's estimate of the burden of the proposed collection of information, including the validity of the methodology and assumptions used; (c) Enhance the quality, utility, and clarity of the information to be collected; and (d) Minimize the burden of the collection of information on those who are to respond, including through the use of appropriate automated, electronic, mechanical, or other technological collection techniques or other forms of information technology, e.g., permitting electronic submission of responses.

Dated: January 23, 2014.

Susan K. Fawcett,

Records Officer, USPTO, Office of the Chief Information Officer.

[FR Doc. 2014–01520 Filed 1–27–14; 8:45 am]

BILLING CODE 3510–16–P

COMMODITY FUTURES TRADING COMMISSION

Global Markets Advisory Committee

AGENCY: Commodity Futures Trading Commission.

ACTION: Notice of meeting.

SUMMARY: The Commodity Futures Trading Commission (CFTC) announces that on February 12, 2014, from 2 p.m. to 5 p.m., the Global Markets Advisory Committee (GMAC) will hold a public meeting at the CFTC's Washington, DC, headquarters. The GMAC will discuss the CFTC staff's advisory issued on November 14, 2013, related to the CFTC's cross-border guidance addressing the applicability of certain Commission regulations.

DATES: The meeting will be held on Wednesday, February 12, 2014, from 2 p.m. to 5 p.m. Members of the public who wish to submit written statements in connection with the meeting should submit them by February 6, 2014.

ADDRESSES: The meeting will take place in the Conference Center at the CFTC's headquarters, Three Lafayette Centre, 1155 21st Street NW., Washington, DC 20581. Written statements should be submitted by electronic mail to: *secretary@cftc.gov.* Statements may also be submitted by mail to: Commodity Futures Trading Commission, Three Lafayette Centre, 1155 21st Street NW., Washington, DC 20581, attention: Office of the Secretary. Please use the title ''Global Markets Advisory Committee'' in any written statement you submit. Any statements submitted in connection with the committee meeting will be made available to the public, including by publication on the CFTC Web site, *www.cftc.gov.*

FOR FURTHER INFORMATION CONTACT: Ted Serafini, GMAC Designated Federal Officer, Commodity Futures Trading Commission, Three Lafayette Centre, 1155 21st Street NW., Washington, DC 20581; (202) 418–5010.

SUPPLEMENTARY INFORMATION: The CFTC GMAC will hold a public meeting on Wednesday, February 12, 2014, from 2 p.m. to 5 p.m. at the CFTC's Washington, DC headquarters. The GMAC meeting will focus on the CFTC staff's advisory issued on November 14, 2013, related to the CFTC's cross-border guidance addressing the applicability of certain Commission regulations.

The meeting will be open to the public with seating on a first-come, first-served basis. Persons requiring special accommodations to attend the meeting because of a disability should notify the contact person listed above.

Members of the public may also listen to the meeting by telephone by calling a domestic toll-free telephone or international toll or toll-free number to connect to a live, listen-only audio feed. Call-in participants should be prepared to provide their first name, last name, and affiliation. The call-in information is as follows:

Domestic Toll Free: 1–866–844–9416

International Toll and Toll Free: Will be posted on the CFTC's Web site, *http://www.cftc.gov,* on the page for the meeting, under Related Documents.

Conference ID: 3964578

Pass Code/Pin Code: 96457

After the meeting, a transcript of the meeting will be published through a link on the CFTC's Web site, *http://www.cftc.gov.* All written submissions provided to the CFTC in any form will also be published on the CFTC's Web site.

(Authority: 5 U.S.C. Appendix, Federal Advisory Committee Act, Sec. 10(a)(2)).

Dated: January 23, 2014.

Christopher J. Kirkpatrick,

Deputy Secretary of the Commission.

[FR Doc. 2014–01575 Filed 1–27–14; 8:45 am]

BILLING CODE 6351–01–P

COMMODITY FUTURES TRADING COMMISSION

Sunshine Act Meetings

TIME AND DATE: 10 a.m., Friday, January 31, 2014.

PLACE: 1155 21st St. NW., Washington, DC, 9th Floor Commission Conference Room

STATUS: Closed

MATTERS TO BE CONSIDERED: Surveillance, Enforcement Matters, and Examinations. In the event that the times, dates or locations of this or any future meetings change, an announcement of the change, along with the new time, date and location of the meeting will be posted on the Commission's Web site at *http://www.cftc.gov.*

CONTACT PERSON FOR MORE INFORMATION: Melissa D. Jurgens, 202–418–5516.

Natise Stowe,

Executive Assistant.

[FR Doc. 2014–01615 Filed 1–24–14; 11:15 am]

BILLING CODE 6351–01–P

CONSUMER PRODUCT SAFETY COMMISSION

[Docket No. CPSC–2009–0093]

Agency Information Collection Activities; Proposed Collection; Comment Request; Consumer Opinion Forum

AGENCY: Consumer Product Safety Commission.

ACTION: Notice.

SUMMARY: As required by the Paperwork Reduction Act of 1995 (44 U.S.C. Chapter 35), the Consumer Product Safety Commission (CPSC or Commission) requests comments on a proposed extension of approval of a collection of information from persons who may voluntarily register and participate in a Consumer Opinion Forum on the CPSC Web site, *wwww.cpsc.gov.* The Commission will consider all comments received in response to this notice before requesting an extension of this collection of information from the Office of Management and Budget (OMB).

DATES: Submit written or electronic comments on the collection of information by March 31, 2014.

ADDRESSES: You may submit comments, identified by Docket No. CPSC–2009–0093, by any of the following methods:

Electronic Submissions: Submit electronic comments to the Federal eRulemaking Portal at: *http://www.regulations.gov.* Follow the instructions for submitting comments. The Commission does not accept comments submitted by electronic mail (email), except through *www.regulations.gov.* The Commission encourages you to submit electronic comments by using the Federal eRulemaking Portal, as described above.

Written Submissions: Submit written submissions in the following way: Mail/

Hand delivery/Courier (for paper, disk, or CD–ROM submissions), preferably in five copies, to: Office of the Secretary, Consumer Product Safety Commission, Room 820, 4330 East West Highway, Bethesda, MD 20814; telephone (301) 504–7923.

Instructions: All submissions received must include the agency name and docket number for this notice. All comments received may be posted without change, including any personal identifiers, contact information, or other personal information provided, to: *http://www.regulations.gov.* Do not submit confidential business information, trade secret information, or other sensitive or protected information that you do not want to be available to the public. If furnished at all, such information should be submitted in writing.

Docket: For access to the docket to read background documents or comments received, go to: *http://www.regulations.gov,* and insert the docket number, CPSC–2009–0093, into the ''Search'' box, and follow the prompts.

FOR FURTHER INFORMATION CONTACT: Robert H. Squibb, Consumer Product Safety Commission, 4330 East West Highway, Bethesda, MD 20814; (301) 504–7815, or by email to: *rsquibb@cpsc.gov.*

SUPPLEMENTARY INFORMATION:

A. Background

Section 5(a) of the Consumer Product Safety Act (CPSA), 15 U.S.C. 2054(a), authorizes the Commission to conduct studies and investigations relating to the causes and prevention of deaths, accidents, injuries, illnesses, other health impairments, and economic losses associated with consumer products. Section 5(b) of the CPSA, 15 U.S.C. 2054(b), further provides that the Commission may conduct research, studies and investigations on the safety of consumer products or test consumer products and develop product safety test methods and testing devices.

To help identify and evaluate product-related incidents, Commission staff seeks to solicit consumer opinions and perceptions about consumer product use, on a voluntary basis, through questions posted on the CPSC's Consumer Opinion Forum (Forum). The Forum invites consumers to answer questions and provide information regarding their experiences, opinions, and/or perceptions on the use, or pattern of use, of a specific product, or type of product. The Forum is intended for consumers, 18 years and older, who have access to the Internet and email, who voluntarily register to participate through a participant registration process, and respond to the questions posted in the Forum. The CPSC Web site, *www.cpsc.gov,* links to the Forum login page. Consumers may link directly to the login page for the Forum at *https://www.cpsc.gov/cgibin/cof/login.aspx.* When CPSC posts new questions on the agency's Web site, CPSC will send an email to registered participants (no more frequently than every four weeks), inviting participants to respond to various questions. Consumer responses are seen only by CPSC staff.

The information that the agency collects from the Forum will help inform the Commission's identification and evaluation of consumer products and product use, by providing insight and information into consumer perceptions and usage patterns. This information may also assist the Commission in its efforts to support voluntary standards activities, and help CPSC identify consumer safety issues requiring additional research. In addition, based on the information obtained, CPSC may be able to provide safety information to the public that is easier to read and understood by a wider range of consumers. For example, CPSC may want to propose new language or revise existing language in warning labels or manuals if many Forum participants perceive that certain warning language is unclear or subject to misinterpretation.

In addition, CPSC may use the Forum to solicit consumer opinions about the effectiveness of product recall communications and what actions consumers take in response to such communications and why. This information may help CPSC to tailor future recall activities to increase the success of those activities.

Four surveys have been conducted thus far. The first survey sought information on consumer experiences with recalled products. The second survey sought information on consumer experiences with electrical outlets that contain ground fault circuit interrupters (GFCIs). The third survey sought information on consumer experiences with clothes dryers and clothes dryer maintenance. The fourth survey sought information on consumer experiences with tipovers of televisions.

B. Burden Hours

1. Respondents

The Forum has been in existence since June 2007. As of January 7, 2014, 3,489 have registered to participate in the Forum. The CPSC has not limited the total number of Forum respondents, and registration continues to be open. Based on the rate at which participants are registering, however, staff does not believe that the total number of registrants will increase substantially over the next few years. Staff believes that the number of registrants is not likely to exceed the CPSC staff's original estimate of 5,000 respondents. Staff estimates that registration takes no more than 10 minutes; the aggregate registration burden is estimated to be about 83 burden hours per year.

The time required for a respondent to respond to survey questions varies considerably, depending upon the specific number, type, and complexity of questions asked. Although this variability makes the time to respond to a survey difficult to estimate, staff estimates that respondents will need less than 15 minutes to complete any Forum survey.

CPSC has conducted four surveys. Although the starting and ending times for each completed survey are available, because respondents can begin a survey and return later to complete the survey, the results may overstate the actual time spent responding to the survey. The resulting data show that the average completion times for the four surveys were 9.5, 5.0, 9.3, and 4.3 minutes, respectively. However, the median completion times of 4.3, 3.4, 5.4, and 3.0 minutes, respectively, are more likely to reflect the true ''average'' completion time.

For each survey, staff estimates that the aggregate burden to all respondents would not exceed 73 hours (25 percent response rate for 3,489 potential respondents at about 5 minutes per survey). If CPSC conducted one survey per year, the total estimated burden for new registrations and surveys, combined, would not exceed 156 hours annually (73 hours per survey, plus 83 hours for new registrations).

According to the September 2013, press release from the Bureau of Labor Statistics, the average compensational hourly rate is $29.23 (U.S. Bureau of Labor Statistics, ''Employer Costs for Employee Compensation,'' September 2013, Table 9, total compensation for all workers in private industries: *http://www.bls.gov/ncs/*). Thus, the total annual aggregate cost for all participants in one survey is estimated at $4,560.

2. Federal Government

The total staff time for preparing questions for the Forum, maintaining the Forum, and analyzing the responses from the Forum is estimated at about one staff month per year, or about one staff month per survey. Accordingly, if

CPSC conducts one survey each year, we estimate the total staff time to be one staff month annually. The estimated total cost of this collection to the federal government is $14,380, based on an annual compensation of $119,238 (the equivalent of a GS–14 Step 5 employee), with an additional 30.9 percent added for benefits (U.S. Bureau of Labor Statistics, ''Employer Costs for Employee Compensation,'' September 2013, Table 1, percentage of wages and salaries for all civilian management, professional, and related employees), for a total annual compensation of $172,559.

C. Requests for Comments

The Commission invites comments on the proposed collection of information, including:

- Whether the collection of information described above is necessary for the proper performance of the Commission's functions, including whether the information would have practical utility;
- whether the estimated burden of the proposed collection of information is accurate;
- whether the quality, utility, and clarity of the information to be collected could be enhanced; and
- whether the burden imposed by the collection of information could be minimized by use of automated, electronic, or other technological collection techniques, or other forms of information technology.

Dated: January 22, 2014.

Todd A. Stevenson,

Secretary, Consumer Product Safety Commission.

[FR Doc. 2014–01529 Filed 1–27–14; 8:45 am]

BILLING CODE 6355–01–P

DEPARTMENT OF DEFENSE

Office of the Secretary

[Docket ID: DoD–2013–OS–0127]

Submission for OMB Review; Comment Request

AGENCY: Defense Finance and Accounting Service (DFAS), DoD.

ACTION: 30-Day notice of submission of information collection approval from the Office of Management and Budget and request for comments.

SUMMARY: As part of an effort to streamline the process to seek feedback from the public on service delivery, DFAS has submitted a Generic Information Collection Request (Generic ICR): ''Generic Clearance for the Collection of Qualitative Feedback on Agency Service Delivery '' to OMB for approval under the Paperwork Reduction Act (PRA) (44 U.S.C. 3501 et seq.).

DATES: Comments must be submitted by February 27, 2014.

FOR FURTHER INFORMATION CONTACT: Fred Licari, 571–372–0493.

SUPPLEMENTARY INFORMATION:

Title and OMB Number: Generic Clearance for the DFAS Customer Satisfaction Surveys; OMB Control Number 0730–0003.

Needs and Uses: The information collection requirement is necessary to determine the kind and quality of services DFAS customers want and expect, as well as their satisfaction with DFAS's existing services. The information collected will be used internally to determine where and to what extent services are satisfactory and to identify areas for improvement. With the cooperation of the Office of Personnel Management (OPM), DFAS conducts annual Customer Satisfaction Surveys of various customer populations, expected to number 3 separate annual surveys that involve members of the public, administered in May of each year. The surveys are the Contractor Survey, Retiree and Annuitant Survey and Vendor Pay Survey. In addition, an invitation to complete a brief ad-hoc survey is sent out to anyone who either accesses the MyPay system or interacts with a MyPay representative. Survey respondents under this generic clearance may include contractors, vendors, annuitants, and retired civil service employers. A 60-day Federal Reserve Notice was published on August 2, 2013 (78 FR 46928). No public comments were received.

Type of Request: Extension.

Affected Public: Individuals or Households.

Respondent's Obligation: Voluntary.

Annual Estimates

A. Annual Surveys

Expected Annual Number of Activities/Collections: 3.

Annual Number of Respondents: 48,100.

Responses per Respondent: 1.

Annual Number of Responses: 48,100.

Frequency of Response: Annual.

Average Burden per Response: 8 minutes.

Annual Burden Hours: 6,413.

B. Ongoing Ad-Hoc Surveys

Annual Number of Respondents: 17,500.

Responses per Respondent: 1.

Annual Number of Responses: 17,500.

Frequency of Response: On occasion.

Average Burden per Response: 2 minutes.

Annual Burden Hours: 583.

C. Totals

Annual Number of Respondents: 65,600.

Responses per Respondent: 1.

Annual Number of Responses: 65,600.

Frequency of Response: On occasion.

Average Burden per Response: Approximate 6.4 minutes.

Annual Burden Hours: 6,996.

3-Year Estimates: The 3-Year Ceiling for This Generic Collection

A. Annual Surveys

Total Expected Number of Activities/Collections: 9.

Total Number of Respondents: 144,300.

Responses per Respondent: 1.

Total Number of Responses: 144,300.

Frequency of Response: Annual.

Average Burden per Response: 8 minutes.

Total Burden Hours: 19,239.

B. Ongoing Ad-Hoc Surveys

Total Number of Respondents: 52,500.

Responses per Respondent: 1.

Total Number of Responses: 52,500.

Frequency of Response: On occasion.

Average Burden per Response: 2 minutes.

Total Burden Hours: 1749.

C. Totals

Total Number of Respondents: 196,800.

Responses per Respondent: 1.

Total Number of Responses: 196,800.

Frequency of Response: On Occasion.

Average Burden per Response: Approximate 6.4 minutes.

Total Burden Hours: 20,988.

OMB Desk Officer: Ms. Jasmeet Seehra.

Written comments and recommendations on the proposed information collection should be sent to Ms. Jasmeet Seehra at the Office of Management and Budget, Desk Officer for DoD, Room 10236, New Executive Office Building, Washington, DC 20503.

You may also submit comments, identified by docket number and title, by the following method:

- *Federal eRulemaking Portal: http://www.regulations.gov.* Follow the instructions for submitting comments.

Instructions: All submissions received must include the agency name, docket number and title for this **Federal Register** document. The general policy for comments and other submissions from members of the public is to make

these submissions available for public viewing on the Internet at *http://www.regulations.gov* as they are received without change, including any personal identifiers or contact information.

DoD Clearance Officer: Ms. Patricia Toppings. To request additional information please contact Ms. Toppings, DoD Clearance Officer, at WHS/ESD Information Management Division, 4800 Mark Center Drive, East Tower, Suite 02G09, Alexandria, VA 22350–3100.

Dated: January 23, 2014.

Aaron Siegel,

Alternate OSD Federal Register Liaison Officer, Department of Defense.

[FR Doc. 2014–01601 Filed 1–27–14; 8:45 am]

BILLING CODE 5001–06–P

DEPARTMENT OF DEFENSE

Department of the Navy

[Docket ID USN–2014–0004]

Privacy Act of 1974; System of Records

AGENCY: Department of the Navy, DoD.

ACTION: Notice to alter a system of records.

SUMMARY: The Department of the Navy proposes to alter the system of records, N01000–5, entitled ''Naval Clemency and Parole Board Files'' in its inventory of record systems subject to the Privacy Act of 1974, as amended. This system is used in conjunction with periodic review of the member's or former member's case to determine whether or not clemency or parole is warranted.

DATES: This proposed action will be effective on February 28, 2014 unless comments are received which result in a contrary determination. Comments will be accepted on or before February 27, 2014.

ADDRESSES: You may submit comments, identified by docket number and title, by any of the following methods:

Federal Rulemaking Portal: http://www.regulations.gov. Follow the instructions for submitting comments.

Mail: Federal Docket Management System Office, 4800 Mark Center Drive, East Tower, 2nd Floor, Suite 02G09, Alexandria, VA 22350–3100.

Instructions: All submissions received must include the agency name and docket number for this **Federal Register** document. The general policy for comments and other submissions from members of the public is to make these submissions available for public viewing on the Internet at *http://www.regulations.gov* as they are received without change, including any personal identifiers or contact information.

FOR FURTHER INFORMATION CONTACT: Ms. Robin Patterson, Head, PA/FOIA Office (DNS–36), Department of the Navy, 2000 Navy Pentagon, Washington, DC 20350–2000, or by phone at (202) 685–6545.

SUPPLEMENTARY INFORMATION: The Department of the Navy's notices for systems of records subject to the Privacy Act of 1974 (5 U.S.C. 552a), as amended, have been published in the **Federal Register** and are available from the address in **FOR FURTHER INFORMATION CONTACT** or from the Defense Privacy and Civil Liberties Office Web site at *http://dpclo.defense.gov/privacy/SORNs/component/navy/index.html.*

The proposed system report, as required by 5 U.S.C. 552a(r) of the Privacy Act of 1974, as amended, was submitted on October 24, 2013, to the House Committee on Oversight and Government Reform, the Senate Committee on Governmental Affairs, and the Office of Management and Budget (OMB) pursuant to paragraph 4c of Appendix I to OMB Circular No. A–130, ''Federal Agency Responsibilities for Maintaining Records About Individuals,'' dated February 8, 1996 (February 20, 1996, 61 FR 6427).

Dated: January 22, 2014.

Aaron Siegel,

Alternate OSD Federal Register Liaison Officer, Department of Defense.

N01000–5

SYSTEM NAME:

Naval Clemency and Parole Board Files (January 29, 2007, 72 FR 3983).

CHANGES:

* * * * *

CATEGORIES OF RECORDS IN THE SYSTEM:

Delete entry and replace with ''The file contains individual applications for clemency and/or parole, reports and recommendations thereon indicating progress in confinement or while awaiting completion of appellate review if not confined, or on parole; correspondence between the individual or his counsel and the Naval Clemency and Parole Board or other Navy offices; other correspondence concerning the case; the court-martial order and staff Judge Advocate's review; records of trial; and a summarized record of the proceedings of the Board. Records include the individual's name, Social Security Number (SSN), military personnel records, and medical records.''

AUTHORITY FOR MAINTENANCE OF THE SYSTEM:

Delete entry and replace with ''10 U.S.C. 874(a), 952–954, Remission and Suspension; 10 U.S.C. 5013, Secretary of the Navy; 42 U.S.C. 10601 *et seq.,* Victim's Rights and Restitution Act of 1990 as implemented by DoD Instruction 1030.2, Victim and Witness Assistance Procedures; SECNAVINST 5815.3J, Department of the Navy Clemency and Parole Systems; DoD 6025.18–R, DoD Health Information Privacy Regulation; and E.O. 9397 (SSN), as amended.''

* * * * *

ROUTINE USES OF RECORDS MAINTAINED IN THE SYSTEM, INCLUDING CATEGORIES OF USERS AND THE PURPOSES OF SUCH USES:

Delete entry and replace with ''In addition to those disclosures generally permitted under 5 U.S.C. 552a(b) of the Privacy Act of 1974, as amended, these records contained therein may specifically be disclosed outside the DoD as a routine use pursuant to 5 U.S.C. 552a(b)(3) as follows:

To victims and witnesses of a crime for purposes of providing information regarding the investigation and disposition of an offense (Victim's Rights and Restitution Act of 1990).

The DoD Blanket Routine Uses that appear at the beginning of the Navy's compilation of system of records notices may apply to this system.

Note: This system of records contains Individually Identifiable Health Information. The DoD Health Information Privacy Regulation (DoD 6025.18–R) issued pursuant to the Health Insurance Portability and Accountability Act of 1996, applies to most such health information. DoD 6025–18–R may place additional procedural requirements on the uses and disclosures of such information beyond those found in the Privacy Act of 1974, as amended or mentioned in this system of records notice.''

* * * * *

STORAGE:

Delete entry and replace with ''Paper records and electronic storage media.''

RETRIEVABILITY:

Delete entry and replace with ''Name and SSN.''

* * * * *

NOTIFICATION PROCEDURE:

Delete entry and replace with ''Individuals seeking to determine whether information about themselves is contained in this system should address written inquiries to the Director, Secretary of the Navy Council of Review Boards, Department of the Navy, 720 Kennon Street SE., Room 309, Washington Navy Yard, DC 20374–5023.

Requests should contain full name and SSN, and must be signed.

The system manager may require an original signature or a notarized signature as a means of proving the identity of the individual requesting access to the records.''

RECORD ACCESS PROCEDURES:

Delete entry and replace with ''Individuals seeking access to information about themselves contained in this system should address written inquiries to the Director, Secretary of the Navy Council of Review Boards, Department of the Navy, 720 Kennon Street SE., Room 309, Washington Navy Yard, DC 20374–5023.

Requests should contain full name and SSN, and must be signed.

The system manager may require an original signature or a notarized signature as a means of proving the identity of the individual requesting access to the records.''

* * * * *

[FR Doc. 2014–01446 Filed 1–27–14; 8:45 am]

BILLING CODE 5001–06–P

DEPARTMENT OF EDUCATION

[Docket No. ED–2014–ICCD–0007]

Agency Information Collection Activities; Submission to the Office of Management and Budget for Review and Approval; Comment Request; American Indian Tribally Controlled Colleges and Universities Program (1894–0001)

AGENCY: Office of Postsecondary Education (OPE), Department of Education (ED).

ACTION: Notice.

SUMMARY: In accordance with the Paperwork Reduction Act of 1995 (44 U.S.C. chapter 3501 *et seq.*), ED is proposing a reinstatement of a previously approved information collection.

DATES: Interested persons are invited to submit comments on or before February 27, 2014.

ADDRESSES: Comments submitted in response to this notice should be submitted electronically through the Federal eRulemaking Portal at *http://www.regulations.gov* by selecting Docket ID number ED–2014–ICCD–0007 or via postal mail, commercial delivery, or hand delivery. *Please note that comments submitted by fax or email and those submitted after the comment period will not be accepted.* Written requests for information or comments submitted by postal mail or delivery should be addressed to the Director of the Information Collection Clearance Division, U.S. Department of Education, 400 Maryland Avenue SW., LBJ, Mailstop L–OM–2–2E319, Room 2E103, Washington, DC 20202.

FOR FURTHER INFORMATION CONTACT: For questions related to collection activities or burden, please call Kate Mullan, 202–401–0563 or electronically mail *ICDocketMgr@ed.gov.* Please do not send comments here. We will ONLY accept comments in this mailbox when the *regulations.gov* site is not available to the public for any reason.

SUPPLEMENTARY INFORMATION: The Department of Education (ED), in accordance with the Paperwork Reduction Act of 1995 (PRA) (44 U.S.C. 3506(c)(2)(A)), provides the general public and Federal agencies with an opportunity to comment on proposed, revised, and continuing collections of information. This helps the Department assess the impact of its information collection requirements and minimize the public's reporting burden. It also helps the public understand the Department's information collection requirements and provide the requested data in the desired format. ED is soliciting comments on the proposed information collection request (ICR) that is described below. The Department of Education is especially interested in public comment addressing the following issues: (1) Is this collection necessary to the proper functions of the Department; (2) will this information be processed and used in a timely manner; (3) is the estimate of burden accurate; (4) how might the Department enhance the quality, utility, and clarity of the information to be collected; and (5) how might the Department minimize the burden of this collection on the respondents, including through the use of information technology. Please note that written comments received in response to this notice will be considered public records.

Title of Collection: American Indian Tribally Controlled Colleges and Universities Program (1894–0001).

OMB Control Number: 1840–0817.

Type of Review: A reinstatement of a previously approved information collection.

Respondents/Affected Public: Private Sector.

Total Estimated Number of Annual Responses: 68.

Total Estimated Number of Annual Burden Hours: 816.

Abstract: The information is required of institutions of higher education that apply for grants under the Tribally Controlled Colleges and Universities Program authorized under Title III, Part A of the Higher Education Act of 1965, as amended. This information will be used in making funding recommendations.

Kate Mullan,

Acting Director, Information Collection Clearance Division, Privacy, Information and Records Management Services, Office of Management.

[FR Doc. 2014–01553 Filed 1–27–14; 8:45 am]

BILLING CODE 4000–01–P

DEPARTMENT OF EDUCATION

Applications for New Awards; Rehabilitation Training: Rehabilitation Long-Term Training Program—Vocational Rehabilitation Counseling

AGENCY: Office of Special Education and Rehabilitative Services, Department of Education.

ACTION: Applications for New Awards; extension of the application period.

SUMMARY: On November 5, 2013, we published in the **Federal Register** a notice inviting applications for new awards under the Rehabilitation Training: Rehabilitation Long-Term Training Program—Vocational Rehabilitation Counseling competition. That notice established a February 3, 2014, deadline for the submission of applications, a 90-day application period in total, and a deadline of April 4, 2014, for intergovernmental review. We are extending both deadlines by one day.

Catalog of Federal Domestic Assistance (CFDA) Number: 84.129B.

DATES:

Applications Available: November 5, 2013.

Deadline for Transmittal of Applications: February 4, 2014.

Deadline for Intergovernmental Review: April 5, 2014.

FOR FURTHER INFORMATION CONTACT: RoseAnn Ashby, U.S. Department of Education, Rehabilitation Services Administration, 400 Maryland Avenue SW., room 5055, PCP, Washington, DC 20202–2800. Telephone: (202) 245–7258 or by email: *roseann.ashby@ed.gov.*

SUPPLEMENTARY INFORMATION: On November 5, 2013, the Secretary invited applications for new awards for fiscal year (FY) 2014 under the Rehabilitation Training: Rehabilitation Long-Term Training Program—Vocational Rehabilitation Counseling competition (78 FR 66346). The Rehabilitation Long-Term Training program provides financial assistance for—

(1) Projects that provide basic or advanced training leading to an academic degree in areas of personnel shortages in rehabilitation as identified by the Secretary;

(2) Projects that provide a specified series of courses or program of study leading to the award of a certificate in areas of personnel shortages in rehabilitation as identified by the Secretary; and

(3) Projects that provide support for medical residents enrolled in residency training programs in the specialty of physical medicine and rehabilitation.

The notice inviting applications established a February 3, 2014, deadline for the submission of applications. That same day, because of technical difficulties and to ensure the accuracy of information in the application package, the Department withdrew the application package from the Education Publications Center for a period of 18 hours. To ensure that all interested parties are provided a minimum of 90 days to submit their applications, we are extending the application period for one day to February 4, 2014. Consequently, we are also extending the deadline for intergovernmental review to April 5, 2014. All other information in the November 5, 2013, notice, including the two absolute priorities, remains the same.

Accessible Format: Individuals with disabilities can obtain this document in an accessible format (e.g., braille, large print, audiotape, or compact disc) on request to the contact person listed under **FOR FURTHER INFORMATION CONTACT**.

Electronic Access to This Document: The official version of this document is the document published in the **Federal Register**. Free Internet access to the official edition of the **Federal Register** and the Code of Federal Regulations is available via the Federal Digital System at: *www.gpo.gov/fdsys.* At this site you can view this document, as well as all other documents of this Department published in the **Federal Register**, in text or Adobe Portable Document Format (PDF). To use PDF, you must have Adobe Acrobat Reader, which is available free at this site.

You may also access documents of the Department published in the **Federal Register** by using the article search feature at: *www.federalregister.gov.* Specifically, through the advanced search feature at this site, you can limit your search to documents published by the Department.

Dated: January 23, 2014.

Michael K. Yudin,

Acting Assistant Secretary for Special Education and Rehabilitative Services.

[FR Doc. 2014–01617 Filed 1–27–14; 8:45 am]

BILLING CODE 4000–01–P

DEPARTMENT OF ENERGY

Environmental Management Site-Specific Advisory Board, Oak Ridge Reservation

AGENCY: Department of Energy.

ACTION: Notice of open meeting.

SUMMARY: This notice announces a meeting of the Environmental Management Site-Specific Advisory Board (EM SSAB), Oak Ridge Reservation. The Federal Advisory Committee Act (Pub. L. 92–463, 86 Stat. 770) requires that public notice of this meeting be announced in the **Federal Register**.

DATES: Wednesday, February 12, 2014; 6 p.m.

ADDRESSES: Department of Energy Information Center, Office of Science and Technical Information, 1 Science.gov Way, Oak Ridge, Tennessee 37830.

FOR FURTHER INFORMATION CONTACT: Melyssa P. Noe, Federal Coordinator, Department of Energy Oak Ridge Operations Office, P.O. Box 2001, EM–90, Oak Ridge, TN 37831. Phone (865) 241–3315; Fax (865) 576–0956 or email: *noemp@emor.doe.gov* or check the Web site at *www.oakridge.doe.gov/em/ssab.*

SUPPLEMENTARY INFORMATION:

Purpose of the Board: The purpose of the Board is to make recommendations to DOE–EM and site management in the areas of environmental restoration, waste management, and related activities.

Tentative Agenda

- Welcome and Announcements
- Comments from the Deputy Designated Federal Officer
- Comments from the DOE, Tennessee Department of Environment and Conservation, and Environmental Protection Agency Liaisons
- Public Comment Period
- Presentation
- Additions/Approval of Agenda
- Motions/Approval of January 8, 2013 Meeting Minutes
- Status of Recommendations with DOE
- Committee Reports
- Federal Coordinator Report
- Adjourn

Public Participation: The EM SSAB, Oak Ridge, welcomes the attendance of the public at its advisory committee meetings and will make every effort to accommodate persons with physical disabilities or special needs. If you require special accommodations due to a disability, please contact Melyssa P. Noe at least seven days in advance of the meeting at the phone number listed above. Written statements may be filed with the Board either before or after the meeting. Individuals who wish to make oral statements pertaining to the agenda item should contact Melyssa P. Noe at the address or telephone number listed above. Requests must be received five days prior to the meeting and reasonable provision will be made to include the presentation in the agenda. The Deputy Designated Federal Officer is empowered to conduct the meeting in a fashion that will facilitate the orderly conduct of business. Individuals wishing to make public comments will be provided a maximum of five minutes to present their comments.

Minutes: Minutes will be available by writing or calling Melyssa P. Noe at the address and phone number listed above. Minutes will also be available at the following Web site: *http://www.oakridge.doe.gov/em/ssab/board-minutes.html.*

Issued at Washington, DC, on January 16, 2014.

Carol A. Matthews,

Committee Management Officer.

[FR Doc. 2014–01592 Filed 1–27–14; 8:45 am]

BILLING CODE 6450–01–P

DEPARTMENT OF ENERGY

Environmental Management Site-Specific Advisory Board, Northern New Mexico

AGENCY: Department of Energy.

ACTION: Notice of open meeting.

SUMMARY: This notice announces a combined meeting of the Environmental Monitoring and Remediation Committee and Waste Management Committee of the Environmental Management Site-Specific Advisory Board (EM SSAB), Northern New Mexico (known locally as the Northern New Mexico Citizens' Advisory Board [NNMCAB]). The Federal Advisory Committee Act (Pub. L. 92–463, 86 Stat. 770) requires that public notice of this meeting be announced in the **Federal Register**.

DATES: Wednesday, February 12, 2014; 2:00 p.m.–4:00 p.m.

ADDRESSES: Cities of Gold Conference Center, NNMCAB Conference Room, 94 Cities of Gold Road, Pojoaque, NM 87506.

FOR FURTHER INFORMATION CONTACT: Menice Santistevan, Northern New Mexico Citizens' Advisory Board, 94 Cities of Gold Road, Santa Fe, NM 87506. Phone (505) 995–0393; Fax (505) 989–1752 or Email: *menice.santistevan@nnsa.doe.gov.*

SUPPLEMENTARY INFORMATION:

Purpose of the Board: The purpose of the Board is to make recommendations to DOE–EM and site management in the areas of environmental restoration, waste management, and related activities.

Purpose of the Environmental Monitoring and Remediation Committee (EM&R): The EM&R Committee provides a citizens' perspective to NNMCAB on current and future environmental remediation activities resulting from historical Los Alamos National Laboratory (LANL) operations and, in particular, issues pertaining to groundwater, surface water and work required under the New Mexico Environment Department Order on Consent. The EM&R Committee will keep abreast of DOE–EM and site programs and plans. The committee will work with the NNMCAB to provide assistance in determining priorities and the best use of limited funds and time. Formal recommendations will be proposed when needed and, after consideration and approval by the full NNMCAB, may be sent to DOE–EM for action.

Purpose of the Waste Management (WM) Committee: The WM Committee reviews policies, practices and procedures, existing and proposed, so as to provide recommendations, advice, suggestions and opinions to the NNMCAB regarding waste management operations at the Los Alamos site.

Tentative Agenda

1. 2:00 p.m. Approval of Agenda
2. 2:03 p.m. Approval of Minutes from January 8, 2014
3. 2:07 p.m. Old Business
   - Update on Waste Isolation Pilot Plant Permit Modification (Hanford Mod)
   - Review of Mercury Supplemental Environmental Impact Statement NNMCAB Comment Responses
4. 2:25 p.m. New Business
   - Update from Annual Evaluation Ad Hoc Committee
   - LANL Public Reading Room (Available Resources)
5. 2:35 p.m. Update from Executive Committee—Carlos Valdez, Chair
6. 2:40 p.m. Update from DOE—Lee Bishop, Deputy Designated Federal Officer
7. 3:00 p.m. Presentation by Scott Kovac, Nuclear Watch New Mexico
   - Nuke Watch Perspective on Material Disposal Area G Cap and Cover
8. 3:45p.m. Public Comment Period
9. 4:00 p.m. Adjourn

Public Participation: The NNMCAB's Committees welcome the attendance of the public at their combined committee meeting and will make every effort to accommodate persons with physical disabilities or special needs. If you require special accommodations due to a disability, please contact Menice Santistevan at least seven days in advance of the meeting at the telephone number listed above. Written statements may be filed with the Committees either before or after the meeting. Individuals who wish to make oral statements pertaining to agenda items should contact Menice Santistevan at the address or telephone number listed above. Requests must be received five days prior to the meeting and reasonable provision will be made to include the presentation in the agenda. The Deputy Designated Federal Officer is empowered to conduct the meeting in a fashion that will facilitate the orderly conduct of business. Individuals wishing to make public comments will be provided a maximum of five minutes to present their comments.

Minutes: Minutes will be available by writing or calling Menice Santistevan at the address or phone number listed above. Minutes and other Board documents are on the Internet at: *http://www.nnmcab.energy.gov/.*

Issued at Washington, DC, on January 16, 2014.

Carol A. Matthews,

Committee Management Officer.

[FR Doc. 2014–01588 Filed 1–27–14; 8:45 am]

BILLING CODE 6405–01–P

DEPARTMENT OF ENERGY

Environmental Management Site-Specific Advisory Board, Portsmouth

AGENCY: Department of Energy (DOE).

ACTION: Notice of open meeting.

SUMMARY: This notice announces a meeting of the Environmental Management Site-Specific Advisory Board (EM SSAB), Portsmouth. The Federal Advisory Committee Act (Pub. L. 92–463, 86 Stat. 770) requires that public notice of this meeting be announced in the **Federal Register**.

DATES: Thursday, February 6, 2014, 6:00 p.m.

ADDRESSES: Ohio State University, Endeavor Center, 1862 Shyville Road, Piketon, Ohio 45661.

FOR FURTHER INFORMATION CONTACT: Greg Simonton, Alternate Deputy Designated Federal Officer, Department of Energy Portsmouth/Paducah Project Office, Post Office Box 700, Piketon, Ohio 45661, (740) 897–3737, *Greg.Simonton@lex.doe.gov.*

SUPPLEMENTARY INFORMATION:

Purpose of the Board: The purpose of the Board is to make recommendations to DOE–EM and site management in the areas of environmental restoration, waste management and related activities.

Tentative Agenda

- Call to Order, Introductions, Review of Agenda
- Approval of December Minutes
- Deputy Designated Federal Officer's Comments
- Federal Coordinator's Comments
- Liaison's Comments
- Presentation
- Administrative Issues
- Subcommittee Updates
- Public Comments
- Final Comments from the Board
- Adjourn

Public Participation: The meeting is open to the public. The EM SSAB, Portsmouth, welcomes the attendance of the public at its advisory committee meetings and will make every effort to accommodate persons with physical disabilities or special needs. If you require special accommodations due to a disability, please contact Greg Simonton at least seven days in advance of the meeting at the phone number listed above. Written statements may be filed with the Board either before or after the meeting. Individuals who wish to make oral statements pertaining to agenda items should contact Greg Simonton at the address or telephone number listed above. Requests must be received five days prior to the meeting and reasonable provision will be made to include the presentation in the agenda. The Deputy Designated Federal Officer is empowered to conduct the meeting in a fashion that will facilitate the orderly conduct of business. Individuals wishing to make public comments will be provided a maximum of five minutes to present their comments.

Minutes: Minutes will be available by writing or calling Greg Simonton at the address and phone number listed above. Minutes will also be available at the following Web site: *http://www.ports-ssab.energy.gov/.*

Issued at Washington, DC, on January 16, 2014.

Carol A. Matthews,

Committee Management Officer.

[FR Doc. 2014–01590 Filed 1–27–14; 8:45 am]

BILLING CODE 6450–01–P

DEPARTMENT OF ENERGY

Federal Energy Regulatory Commission

Combined Notice of Filings #1

Take notice that the Commission received the following electric corporate filings:

Docket Numbers: EC14–42–000.

Applicants: Fowler Ridge IV Wind Farm LLC.

Description: Application for Authorization under Section 203 of the Federal Power Act and Request for Waivers and Expedited Action of Fowler Ridge IV Wind Farm LLC.

Filed Date: 1/15/14.

Accession Number: 20140115–5108.

Comments Due: 5 p.m. ET 2/5/14.

Take notice that the Commission received the following electric rate filings:

Docket Numbers: ER10–2848–002; ER11–1939–004; ER11–2754–004; ER12–999–002; ER12–1002–002; ER12–1005–002; ER12–1006–002; ER12–1007–003.

Applicants: AP Holdings, LLC, AP Gas & Electric (IL), LLC, AP Gas & Electric (PA), LLC, AP Gas & Electric (TX), LLC, AP Gas & Electric (MD), LLC, AP Gas & Electric (NJ), LLC, AP Gas & Electric (OH), LLC, AP Gas & Electric (NY), LLC.

Description: Second Supplement to June 28, 2013 Updated Market Power Analysis for the Southwest Region of AP Holdings Subsidiaries.

Filed Date: 1/14/14.

Accession Number: 20140114–5171.

Comments Due: 5 p.m. ET 2/4/14.

Docket Numbers: ER13–83–004.

Applicants: Duke Energy Carolinas, LLC, Duke Energy Progress, Inc.

Description: Duke Energy Carolinas, LLC, et al. submits Order No. 1000 Regional Compliance Filing Under Protest.

Filed Date: 1/14/14.

Accession Number: 20140114–5174.

Comments Due: 5 p.m. ET 2/13/14.

Docket Numbers: ER13–908–002.

Applicants: Alabama Power Company.

Description: Alabama Power Company submits Order No. 1000 Second Regional Compliance Filing-FILING SUBMITTED UNDER PROTEST to be effective 6/1/2014.

Filed Date: 1/14/14.

Accession Number: 20140114–5121.

Comments Due: 5 p.m. ET 2/13/14.

Docket Numbers: ER13–913–002.

Applicants: Ohio Valley Electric Corporation.

Description: Ohio Valley Electric Corporation submits Order No. 1000 Regional Compliance Filing to be effective 6/1/2014.

Filed Date: 1/14/14.

Accession Number: 20140114–5118.

Comments Due: 5 p.m. ET 2/13/14.

Docket Numbers: ER14–81–001.

Applicants: Pacific Gas and Electric Company.

Description: Balancing Account Revisions 2014 Deficiency Filing to be effective 3/1/2014.

Filed Date: 1/15/14.

Accession Number: 20140115–5000.

Comments Due: 5 p.m. ET 2/5/14.

Docket Numbers: ER14–689–002.

Applicants: Midcontinent Independent System Operator, Inc.

Description: Midcontinent Independent System Operator, Inc. submits 2014–01–13 Entergy IA Succession Withdrawal Amendment to be effective 12/19/2013.

Filed Date: 1/15/14.

Accession Number: 20140115–5106.

Comments Due: 5 p.m. ET 2/5/14.

Docket Numbers: ER14–998–000.

Applicants: Richland-Stryker Generation LLC.

Description: Normal to be effective 1/16/2014.

Filed Date: 1/15/14.

Accession Number: 20140115–5034.

Comments Due: 5 p.m. ET 2/5/14.

Docket Numbers: ER14–999–000.

Applicants: Entergy Services, Inc.

Description: Entergy Services, Inc., Compliance Filing to be effective 1/16/2014.

Filed Date: 1/15/14.

Accession Number: 20140115–5054.

Comments Due: 5 p.m. ET 2/5/14.

Docket Numbers: ER14–1000–000.

Applicants: Southern California Edison Company.

Description: GIA & Distr Serv Agmt for Portal Ridge Solar Project Related to EKWRA Project to be effective 12/15/2013.

Filed Date: 1/15/14.

Accession Number: 20140115–5068.

Comments Due: 5 p.m. ET 2/5/14.

Docket Numbers: ER14–1001–000.

Applicants: Southern California Edison Company.

Description: LGIA and Distrib Service Agmt with Coram California Development, L.P. to be effective 12/15/2013.

Filed Date: 1/15/14.

Accession Number: 20140115–5071.

Comments Due: 5 p.m. ET 2/5/14.

Docket Numbers: ER14–1002–000.

Applicants: Southwest Power Pool, Inc.

Description: Southwest Power Pool, Inc. submits Bylaws Revisions—Affiliate Voting Rules and NEL Definition to be effective 3/16/2014.

Filed Date: 1/15/14.

Accession Number: 20140115–5117.

Comments Due: 5 p.m. ET 2/5/14.

Take notice that the Commission received the following land acquisition reports:

Docket Numbers: LA13–4–000.

Applicants: Bishop Hill Energy II LLC, Cordova Energy Company LLC, MidAmerican Energy Company, Saranac Power Partners, L.P.

Description: Quarterly Land Acquisition Report of the MidAmerican Parties.

Filed Date: 1/14/14.

Accession Number: 20140114–5176.

Comments Due: 5 p.m. ET 2/4/14.

The filings are accessible in the Commission's eLibrary system by clicking on the links or querying the docket number.

Any person desiring to intervene or protest in any of the above proceedings must file in accordance with Rules 211 and 214 of the Commission's Regulations (18 CFR 385.211 and 385.214) on or before 5:00 p.m. Eastern time on the specified comment date. Protests may be considered, but intervention is necessary to become a party to the proceeding.

eFiling is encouraged. More detailed information relating to filing requirements, interventions, protests, service, and qualifying facilities filings can be found at: *http://www.ferc.gov/docs-filing/efiling/filing-req.pdf.* For other information, call (866) 208–3676 (toll free). For TTY, call (202) 502–8659.

Dated: January 15, 2014.

Nathaniel J. Davis, Sr.,

Deputy Secretary.

[FR Doc. 2014–01495 Filed 1–27–14; 8:45 am]

BILLING CODE 6717–01–P

DEPARTMENT OF ENERGY

Federal Energy Regulatory Commission

Combined Notice of Filings

Take notice that the Commission has received the following Natural Gas Pipeline Rate and Refund Report filings:

Filings Instituting Proceedings

Docket Numbers: RP14–366–000.

Applicants: Alliance Pipeline L.P.
Description: ACE Hub Revisions to be effective 2/10/2014.
Filed Date: 1/10/14.
Accession Number: 20140110–5120.
Comments Due: 5 p.m. ET 1/22/14.

Docket Numbers: RP14–367–000.
Applicants: Maritimes & Northeast Pipeline, L.L.C.
Description: Negotiated Rates Cleanup January 2014 to be effective 2/14/2014.
Filed Date: 1/13/14.
Accession Number: 20140113–5118.
Comments Due: 5 p.m. ET 1/27/14.

The filings are accessible in the Commission's eLibrary system by clicking on the links or querying the docket number.

Any person desiring to intervene or protest in any of the above proceedings must file in accordance with Rules 211 and 214 of the Commission's Regulations (18 CFR 385.211 and 385.214) on or before 5:00 p.m. Eastern time on the specified comment date. Protests may be considered, but intervention is necessary to become a party to the proceeding.

eFiling is encouraged. More detailed information relating to filing requirements, interventions, protests, service, and qualifying facilities filings can be found at: *http://www.ferc.gov/docs-filing/efiling/filing-req.pdf.* For other information, call (866) 208–3676 (toll free). For TTY, call (202) 502–8659.

Dated: January 14, 2014.

Nathaniel J. Davis, Sr.,

Deputy Secretary.

[FR Doc. 2014–01496 Filed 1–27–14; 8:45 am]

BILLING CODE 6717–01–P

DEPARTMENT OF ENERGY

Federal Energy Regulatory Commission

Combined Notice of Filings

Take notice that the Commission has received the following Natural Gas Pipeline Rate and Refund Report filings:

Filings Instituting Proceedings

Docket Numbers: PR14–13–000.
Applicants: Acacia Natural Gas, L.L.C.
Description: Tariff filing per 284.123(e) + (g: Acacia Natural Gas Corporation Baseline Filing to be effective 1/7/2014 Filing Type: 1280.
Filed Date: 1/7/14.
Accession Number: 20140107–5056.
Comments Due: 5 p.m. ET 1/28/14.
284.123(g) Protests Due: 5 p.m. ET 3/10/14.

Docket Numbers: PR14–14–000.
Applicants: Lobo Pipeline Company L.P.
Description: Tariff filing per 284.123(e) + (g: compliance with PR13–65–000 to be effective 1/14/2014 Filing Type: 1280.
Filed Date: 1/14/14.
Accession Number: 20140114–5096.
Comments Due: 5 p.m. ET 2/4/14.
284.123(g) Protests Due: 5 p.m. ET 3/17/14.

Docket Numbers: RP14–369–000.
Applicants: PGPipeline LLC.
Description: PGPipeline, LLC Name Change in FERC Gas Tariff Filing to be effective 2/14/2014.
Filed Date: 1/15/14.
Accession Number: 20140115–5064.
Comments Due: 5 p.m. ET 1/27/14.

Docket Numbers: RP14–370–000.
Applicants: Bear Creek Storage Company, L.L.C.
Description: Operational Transactions to be effective 2/14/2014.
Filed Date: 1/15/14.
Accession Number: 20140115–5126.
Comments Due: 5 p.m. ET 1/27/14.

Docket Numbers: RP14–371–000.
Applicants: Colorado Interstate Gas Company, L.L.C.
Description: High Plains Expansion Non-Conforming Agreement Filing to be effective 2/15/2014.
Filed Date: 1/15/14.
Accession Number: 20140115–5170.
Comments Due: 5 p.m. ET 1/27/14.

Any person desiring to intervene or protest in any of the above proceedings must file in accordance with Rules 211 and 214 of the Commission's Regulations (18 CFR 385.211 and 385.214) on or before 5:00 p.m. Eastern time on the specified comment date(s). Protests may be considered, but intervention is necessary to become a party to the proceeding.

Filings in Existing Proceedlings

Docket Numbers: RP13–941–003.
Applicants: Southern Star Central Gas Pipeline, Inc.
Description: Rate Case (RP13–941) Test Period Update Filing.
Filed Date: 1/14/14.
Accession Number: 20140114–5083.
Comments Due: 5 p.m. ET 1/27/14.

Docket Numbers: RP13–1031–003.
Applicants: Trailblazer Pipeline Company LLC.
Description: Compliance to TB Rate Case 2014–01–15 to be effective 1/1/2014.
Filed Date: 1/15/14.
Accession Number: 20140115–5143.
Comments Due: 5 p.m. ET 1/27/14.

Any person desiring to protest in any of the above proceedings must file in accordance with Rule 211 of the Commission's Regulations (18 CFR 385.211) on or before 5:00 p.m. Eastern time on the specified comment date.

The filings are accessible in the Commission's eLibrary system by clicking on the links or querying the docket number.

eFiling is encouraged. More detailed information relating to filing requirements, interventions, protests, service, and qualifying facilities filings can be found at: *http://www.ferc.gov/docs-filing/efiling/filing-req.pdf.* For other information, call (866) 208–3676 (toll free). For TTY, call (202) 502–8659.

Dated: January 16, 2014.

Nathaniel J. Davis, Sr.,

Deputy Secretary.

[FR Doc. 2014–01494 Filed 1–27–14; 8:45 am]

BILLING CODE 6717–01–P

DEPARTMENT OF ENERGY

Federal Energy Regulatory Commission

Combined Notice of Filings #1

Take notice that the Commission received the following electric rate filings:

Docket Numbers: ER10–2639–003; ER11–2200–003; ER12–1716–002.
Applicants: Noble Americas Gas & Power Corp., Noble Americas Energy Solutions LLC, Your Energy Holdings, LLC.
Description: Notice of Change in Status of Noble Americas Gas & Power Corp., et al.
Filed Date: 1/15/14.
Accession Number: 20140115–5195.
Comments Due: 5 p.m. ET 2/5/14.

Docket Numbers: ER13–897–002.
Applicants: Louisville Gas and Electric Company.
Description: Order1000 2nd Regional Compliance Filing to be effective 6/1/2014.
Filed Date: 1/16/14.
Accession Number: 20140116–5000.
Comments Due: 5 p.m. ET 2/13/14.

Docket Numbers: ER14–1003–000.
Applicants: Berry Petroleum Company.
Description: Notice of Succession to be effective 12/16/2013.
Filed Date: 1/15/14.
Accession Number: 20140115–5144.
Comments Due: 5 p.m. ET 2/5/14.

Docket Numbers: ER14–1004–000.
Applicants: California Independent System Operator Corporation.
Description: 2014–01–15_DeficiencyResponse to be effective 4/1/2014.
Filed Date: 1/15/14.
Accession Number: 20140115–5171.

Comments Due: 5 p.m. ET 2/5/14.

Docket Numbers: ER14–1005–000.

Applicants: PJM Interconnection, L.L.C.

Description: PJM Interconnection, L.L.C. submits Queue Position S36; Original Service Agreement No. 3734 to be effective 12/19/2013.

Filed Date: 1/16/14.

Accession Number: 20140116–5061.

Comments Due: 5 p.m. ET 2/6/14.

Docket Numbers: ER14–1006–000.

Applicants: El Paso Electric Company.

Description: El Paso Electric Company submits Service Agreement No. 286 PNM Settlement PTP Rollover to be effective 1/1/2014.

Filed Date: 1/16/14.

Accession Number: 20140116–5078.

Comments Due: 5 p.m. ET 2/6/14.

Docket Numbers: ER14–1007–000.

Applicants: Trans-Allegheny Interstate Line Company, Pennsylvania Electric Company, PJM Interconnection, L.L.C.

Description: Trans-Allegheny Interstate Line Company submits FirstEnergy submits on behalf of TrAILCO & Penelec Service Agmt No. 3690 to be effective 2/10/2014.

Filed Date: 1/16/14.

Accession Number: 20140116–5079.

Comments Due: 5 p.m. ET 2/6/14.

The filings are accessible in the Commission's eLibrary system by clicking on the links or querying the docket number.

Any person desiring to intervene or protest in any of the above proceedings must file in accordance with Rules 211 and 214 of the Commission's Regulations (18 CFR 385.211 and 385.214) on or before 5:00 p.m. Eastern time on the specified comment date. Protests may be considered, but intervention is necessary to become a party to the proceeding.

eFiling is encouraged. More detailed information relating to filing requirements, interventions, protests, service, and qualifying facilities filings can be found at: *http://www.ferc.gov/docs-filing/efiling/filing-req.pdf.* For other information, call (866) 208–3676 (toll free). For TTY, call (202) 502–8659.

Dated: January 16, 2014.

Nathaniel J. Davis, Sr.,

Deputy Secretary.

[FR Doc. 2014–01493 Filed 1–27–14; 8:45 am]

BILLING CODE 6717–01–P

DEPARTMENT OF ENERGY

Federal Energy Regulatory Commission

[Project No. 13739–002]

Lock+ Hydro Friends Fund XLII, LLC; Notice of Draft Environmental Assessment

In accordance with the National Environmental Policy Act of 1969 and the Federal Energy Regulatory Commission's regulations, 18 CFR part 380 (Order No. 486, 52 FR 447897), the Office of Energy Projects has reviewed the application for an original license for the proposed 5.25-megawatt (MW) Braddock Locks and Dam Hydroelectric Project, which would be located on the US Army Corps of Engineers' Braddock Locks and Dam facility on the Monongahela River in the Borough of West Mifflin and the City of Duquesne, Pennsylvania, Allegheny County, Pennsylvania. Commission staff prepared a draft Environmental Assessment (EA) which analyzes the potential environmental effects of construction and operation of the project and concludes that issuing a license for the project, with appropriate environmental measures, would not constitute a major federal action significantly affecting the quality of the human environment.

A copy of the draft EA is on file with the Commission and is available for public inspection. The draft EA may also be viewed on the Commission's Web site at *http://www.ferc.gov* using the ''eLibrary'' link. Enter the docket number excluding the last three digits in the docket number field to access documents. For assistance, contact FERC Online Support at *FERCOnlineSupport@ferc.gov* or toll-free at (866) 208–3676, or for TTY, (202) 502–8659.

You may also register online at *http://www.ferc.gov/docs-filing/esubscription.asp* to be notified via email of new filings and issuances related to this or other pending projects. For assistance, contact FERC Online Support.

Comments on the draft EA should be filed within 30 days from the date of this notice. The Commission strongly encourages electronic filing. Please file comments using the Commission's eFiling system at *http://www.ferc.gov/docs-filing/efiling.asp.* Commenters can submit brief comments up to 6,000 characters, without prior registration, using the eComment system at *http://www.ferc.gov/docs-filing/ecomment.asp.*

You must include your name and contact information at the end of your comments. For assistance, please contact FERC Online Support at *FERCOnlineSupport@ferc.gov,* (866) 208–3676 (toll free), or (202) 502–8659 (TTY). In lieu of electronic filing, please send a paper copy to: Secretary, Federal Energy Regulatory Commission, 888 First Street NE., Washington, DC 20426. The first page of any filing should include docket number P–13739–002.

For further information contact Andy Bernick at (202) 502–8660.

Dated: January 17, 2014.

Kimberly D. Bose,

Secretary.

[FR Doc. 2014–01534 Filed 1–27–14; 8:45 am]

BILLING CODE 6717–01–P

DEPARTMENT OF ENERGY

Federal Energy Regulatory Commission

Notice of Staff Attendance at Southwest Power Pool Regional Entity Trustee, Regional State Committee and Board of Directors Meetings

The Federal Energy Regulatory Commission (Commission) hereby gives notice that members of its staff may attend the meetings of the Southwest Power Pool, Inc. (SPP) Regional Entity Trustee (RE), Regional State Committee (RSC) and Board of Directors, as noted below. Their attendance is part of the Commission's ongoing outreach efforts.

All meetings will be held at the Omni Hotel at Southpark, 4140 Governor's Row, Austin, TX 78744. The hotel's phone number is (512) 448–2222.

SPP RE

January 27, 2014 (8:00 a.m.–12:00 p.m.)

SPP RSC

January 27, 2014 (1:00 p.m.–5:00 p.m.)

SPP Board of Directors

January 28, 2014 (8:00 a.m.–3:00 p.m.)

The discussions may address matters at issue in the following proceedings:

Docket No. ER06–451, *Southwest Power Pool, Inc.*

Docket No. ER08–1419, *Southwest Power Pool, Inc.*

Docket No. ER09–659, *Southwest Power Pool, Inc.*

Docket No. ER11–4105, *Southwest Power Pool, Inc.*

Docket No. ER12–959, *Southwest Power Pool, Inc.*

Docket No. ER12–1179, *Southwest Power Pool, Inc.*

Docket No. ER12–1401, *Southwest Power Pool, Inc.*

Docket No. ER12–1402, *Southwest Power Pool, Inc.*

Docket No. ER12–1586, *Southwest Power Pool, Inc.*
Docket No. ER12–1772, *Southwest Power Pool, Inc.*
Docket No. ER12–1779, *Southwest Power Pool, Inc.*
Docket No. ER12–2292, *Southwest Power Pool, Inc.*
Docket No. ER12–2366, *Southwest Power Pool, Inc.*
Docket No. EL12–2, *Southwest Power Pool, Inc.*
Docket No. EL12–60, *Southwest Power Pool, Inc., et al.*
Docket No. ER12–1813, *The Empire District Electric Co.*
Docket No. ER12–1071, *Entergy Arkansas, Inc.*
Docket No. EL12–59, *Golden Spread Electric Cooperative, Inc.*
Docket No. ER09–548, *ITC Great Plains, LLC*
Docket No. ER12–480, *Midwest Independent Transmission System Operator, Inc.*
Docket No. EL11–34, *Midwest Independent Transmission System Operator, Inc.*
Docket No. ER09–36, *Prairie Wind Transmission, LLC.*
Docket No. ER09–35, *Tallgrass Transmission, LLC.*
Docket No. EL12–28, *Xcel Energy Services Inc., et al.*
Docket No. EL13–15, *Southwestern Public Service Company.*
Docket No. EL13–35, *Southwestern Public Service Company.*
Docket No. ER13–301, *Southwest Power Pool, Inc.*
Docket No. ER13–366, *Southwest Power Pool, Inc.*
Docket No. ER13–367, *Southwest Power Pool, Inc.*
Docket No. ER13–664, *Southwest Power Pool, Inc.*
Docket No. ER13–989, *Southwest Power Pool, Inc.*
Docket No. ER13–1013, *Southwest Power Pool, Inc.*
Docket No. ER13–1014, *Southwest Power Pool, Inc.*
Docket No, ER13–1032, *Southwest Power Pool, Inc.*
Docket No. ER13–1061, *Southwest Power Pool, Inc.*
Docket No. ER13–1068, *Southwest Power Pool, Inc.*
Docket No. ER13–1084, *Southwest Power Pool, Inc.*
Docket No. ER13–1173, *Southwest Power Pool, Inc.*
Docket No. ER13–1264, *Southwest Power Pool, Inc.*
Docket No. ER13–1768, *Southwest Power Pool, Inc.*
Docket No. ER13–2078, *Southwest Power Pool, Inc.*
Docket No. ER14–416, *Southwest Power Pool, Inc.*
Docket No. ER14–521, *Southwest Power Pool, Inc.*
Docket No. ER14–522, *Southwest Power Pool, Inc.*
Docket No. ER14–523, *Southwest Power Pool, Inc.*
Docket No. ER14–524, *Southwest Power Pool, Inc.*
Docket No. ER14–526, *Southwest Power Pool, Inc.*
Docket No. ER14–528, *Southwest Power Pool, Inc.*
Docket No. ER14–529, *Southwest Power Pool, Inc.*
Docket No. ER14–530, *Southwest Power Pool, Inc.*
Docket No. ER14–531, *Southwest Power Pool, Inc.*
Docket No. ER14–532, *Southwest Power Pool, Inc.*
Docket No. ER14–591, *Southwest Power Pool, Inc.*
Docket No. ER14–592, *Southwest Power Pool, Inc.*
Docket No. ER14–594, *Southwest Power Pool, Inc.*
Docket No. ER14–596, *Southwest Power Pool, Inc.*
Docket No. ER14–614, *Southwest Power Pool, Inc.*
Docket No. ER14–617, *Southwest Power Pool, Inc.*
Docket No. ER14–620, *Southwest Power Pool, Inc.*
Docket No. ER14–644, *Southwest Power Pool, Inc.*
Docket No. ER14–662, *Southwest Power Pool, Inc.*
Docket No. ER14–781, *Southwest Power Pool, Inc.*
Docket No. ER14–788, *Southwest Power Pool, Inc.*
Docket No. ER14–791, *Southwest Power Pool, Inc.*
Docket No. ER14–794, *Southwest Power Pool, Inc.*
Docket No. ER14–807, *Southwest Power Pool, Inc.*
Docket No. ER14–813, *Southwest Power Pool, Inc.*
Docket No. ER14–814, *Southwest Power Pool, Inc.*
Docket No. ER14–815, *Southwest Power Pool, Inc.*
Docket No. ER14–962, *Southwest Power Pool, Inc.*
Docket No. ER13–2164, *Southwest Power Pool, Inc.*
Docket No. EL13–84, *Kansas Municipal Energy Agency.*

These meetings are open to the public.

For more information, contact Patrick Clarey, Office of Energy Market Regulation, Federal Energy Regulatory Commission at (317) 249–5937 or *patrick.clarey@ferc.gov.*

Dated: January 17, 2014.

Kimberly D. Bose,

Secretary.

[FR Doc. 2014–01533 Filed 1–27–14; 8:45 am]

BILLING CODE 6717–01–P

ENVIRONMENTAL PROTECTION AGENCY

[FRL–9905–84–Region 4; CERCLA–04–2008–3774]

Georgia-Pacific Hardwood Site; Plymouth, Washington County, North Carolina; Notice of Amended Settlement

AGENCY: Environmental Protection Agency.

ACTION: Notice of amended settlement.

SUMMARY: Under 122(h) of the Comprehensive Environmental Response, Compensation and Liability Act (CERCLA), the United States Environmental Protection Agency has amended a settlement entered into with Castpa, LLC and W.C. Development, Inc. that addresses past costs concerning the Georgia-Pacific Hardwood Site located in Plymouth, Washington County, North Carolina. The Agency had previously entered into a settlement in 2008 addressing costs from a fund-lead Removal Action taken by EPA at the Site. The amendment to the settlement reduces the past cost owed to the Agency based on an ability to pay by the settling parties.

DATES: The Agency will consider public comments on the amended settlement until February 27, 2014. The Agency will consider all comments received and may modify or withdraw its consent to the amended settlement if comments received disclose facts or considerations which indicate that the amended settlement is inappropriate, improper, or inadequate.

ADDRESSES: Copies of the amended settlement are available from the Agency by contacting Ms. Paula V. Painter, Environmental Protection Specialist using the contact information provided in this notice. Comments may also be submitted by referencing the Site's name through one of the following methods:

- *Internet: www.epa.gov/region4/superfund/programs/enforcement/enforcement.html*
- *U.S. Mail:* U.S. Environmental Protection Agency, Superfund Division, Attn: Paula V. Painter, 61 Forsyth Street SW., Atlanta, Georgia 30303,
- *Email: Painter.Paula@epa.gov.*

FOR FURTHER INFORMATION CONTACT: Paula V. Painter at 404/562–8887

Dated: September 23, 2013.

Anita L. Davis,

Chief, Superfund Enforcement & Information Management Branch, Superfund Division.

[FR Doc. 2014–01585 Filed 1–27–14; 8:45 am]

BILLING CODE 6560–50–P

ENVIRONMENTAL PROTECTION AGENCY

[FRL–9905–82–OA]

Request for Nominations of Experts To Augment the Science Advisory Board Chemical Assessment Advisory Committee for the Review of the EPA's Draft Toxicological Review of Benzo[a]pyrene

AGENCY: Environmental Protection Agency (EPA).

ACTION: Notice.

SUMMARY: The EPA Science Advisory Board (SAB) Staff Office requests public nominations of scientific experts to augment the SAB Chemical Assessment Advisory Committee (CAAC) for the review of the EPA's draft Toxicological Review of Benzo[a]pyrene in Support of Summary Information on the Integrated Risk Information System (IRIS).

DATES: Nominations should be submitted by February 18, 2014 per the instructions below.

FOR FURTHER INFORMATION CONTACT: Any member of the public wishing further information regarding this Notice and Request for Nominations may contact the Designated Federal Officer for the review, as identified below. Nominators unable to submit nominations electronically as described below may contact the Designated Federal Officer for assistance. General information concerning the EPA SAB can be found at the EPA SAB Web site at *http://www.epa.gov/sab.*

SUPPLEMENTARY INFORMATION:

Background: The SAB (42 U.S.C. 4365) is a chartered Federal Advisory Committee that provides independent scientific and technical peer review, advice and recommendations to the EPA Administrator on the technical basis for EPA actions. As a Federal Advisory Committee, the SAB conducts business in accordance with the Federal Advisory Committee Act (FACA) (5 U.S.C. App. 2) and related regulations. The SAB Chemical Assessment Advisory Committee (CAAC) is a subcommittee of the SAB that provides advice through the chartered SAB regarding assessments of environmental chemicals available on EPA's Integrated Risk Information System (IRIS). The SAB and the CAAC, augmented with additional experts, will comply with the provisions of FACA and all appropriate SAB Staff Office procedural policies.

The National Center for Environmental Assessment (NCEA) in the EPA's Office of Research and Development (ORD) develops toxicological reviews/assessments for various chemicals for IRIS. NCEA has developed a draft IRIS assessment for benzo[a]pyrene and has asked the SAB to peer review the draft document. The SAB Staff Office is seeking experts to augment the SAB CAAC for this peer review.

Benzo[a]pyrene is a five-ring polycyclic aromatic hydrocarbon that is relatively insoluble in water and has low volatility. It is ubiquitous in the environment primarily as a result of incomplete combustion emissions. Natural sources of benzo[a]pyrene include forest fires and volcanoes, and anthropogenic sources include stoves/furnaces burning fossil fuels (especially wood and coal), motor vehicle exhaust, and various industrial combustion processes. Major sources of occupational exposure involve production of aluminum, coke, graphite and silicon carbide, as well as coal tar distillation. Major sources of non-occupational exposure involve tobacco products and diet (e.g., barbequed or charred meats).

NCEA's draft *Toxicological Review of Benzo[a]pyrene* (August 2013) is an update to a 1987 IRIS assessment for benzo[a]pyrene. The draft assessment and proposed charge questions may be found at the following URL: *http://yosemite.epa.gov/sab/sabproduct.nsf/fedrgstr_activites/IRIS%20BaP?OpenDocument.* The 1987 benzo[a]pyrene assessment currently posted to the IRIS database includes an oral cancer risk estimate (oral slope factor) and a cancer descriptor. For the reassessment, NCEA evaluated epidemiological data, experimental animal data, and other relevant data from studies of noncancer and cancer effects of benzo[a]pyrene. The 2013 draft assessment contains a qualitative characterization of the hazards for benzo[a]pyrene, including a cancer descriptor of the chemical's human carcinogenic potential, cancer risk estimates for oral, inhalation and dermal exposure, and noncancer toxicity values for chronic oral (reference dose) and inhalation (reference concentration) exposure. This assessment includes the IRIS Program's first dermal slope factor. The dermal analysis was included in consideration of EPA's need to estimate the potential for skin cancer from dermal exposure, especially in children exposed to contaminated soil. [Note: NCEA posted the 2013 draft assessment and draft charge questions on the IRIS Web site (*http://cfpub.epa.gov/ncea/iris_drafts/recordisplay.cfm?deid=66193*) on August 21, 2013, which initiated a public comment period that ended on November 21, 2013.

Additionally, on December 12–13, 2013, NCEA held a public meeting to obtain stakeholder and public feedback on the draft charge and the draft benzo[a]pyrene toxicological assessment. As a result of the comments received during the public comment period and the discussions at the December meeting, the August 2013 draft versions of these documents may be revised prior to their submission to the SAB CAAC panel for peer review.]

Technical Contact for EPA's Draft Assessment: For information concerning the EPA draft assessment, please contact Dr. Samantha Jones, National Center for Environmental Assessment, Office of Research and Development, U.S. EPA, 1200 Pennsylvania Avenue NW., Mail Code 8601P, Washington, DC 20460, phone (703) 347–8580 or via email at *jones.samantha@epa.gov.*

Request for Nominations: The SAB Staff Office is seeking nominations of nationally and internationally recognized scientists with demonstrated expertise and research to augment the CAAC for the peer review of the benzo[a]pyrene toxicological review. The SAB Staff Office seeks experts in one or more of the following areas, with a particular focus on benzo[a]pyrene: epidemiology with expertise in PAHs and benzo[a]pyrene; developmental toxicity and neurotoxicity; reproductive toxicity (both male and female); immunotoxicity; genotoxicity; cancer biology; dermal toxicity and carcinogenicity, including toxicokinetic considerations (e.g., dose metrics, extrapolation from animals to humans); and quantitative risk assessment, including dose-response modeling expertise. Questions regarding this review should be directed to Stephanie Sanzone, Designated Federal Officer (DFO), SAB Staff Office, by telephone/voice mail at (202) 564–2067, by fax at (202) 565–2098, or via email at *sanzone.stephanie@epa.gov.*

Process and Deadline for Submitting Nominations: Any interested person or organization may nominate qualified individuals in the areas of expertise described above for possible service on the augmented CAAC panel identified in this notice. Nominations should be submitted in electronic format (preferred over hard copy) following the instructions for ''Nominating Experts to Advisory Panels and Ad Hoc

Committees Being Formed,'' provided on the SAB Web site (see the ''Nomination of Experts'' link on the blue navigational bar at *http://www.epa.gov/sab*). To receive full consideration, nominations should include all of the information requested below. EPA's SAB Staff Office requests contact information about the person making the nomination; contact information about the nominee; the disciplinary and specific areas of expertise of the nominee; the nominee's resume or curriculum vitae; sources of recent grant and/or contract support; and a biographical sketch of the nominee indicating current position, educational background, research activities, and recent service on other national advisory committees or national professional organizations.

Persons having questions about the nomination procedures, or who are unable to submit nominations through the SAB Web site, should contact Ms. Sanzone as noted above. Nominations should be submitted in time to arrive no later than February 18, 2014. EPA values and welcomes diversity. In an effort to obtain nominations of diverse candidates, EPA encourages nominations of women and men of all racial and ethnic groups.

The EPA SAB Staff Office will acknowledge receipt of nominations. The names and biosketches of qualified nominees identified by respondents to this **Federal Register** notice, and additional experts identified by the SAB Staff, will be posted in a List of Candidates for the CAAC benzo[a]pyrene review panel on the SAB Web site at *http://yosemite.epa.gov/sab/sabproduct.nsf/fedrgstr_activites/IRIS%20BaP?OpenDocument.* Public comments on the List of Candidates will be accepted for 21 days. The public will be requested to provide relevant information or other documentation on nominees that the SAB Staff Office should consider in evaluating candidates.

For the EPA SAB Staff Office a balanced review panel includes candidates who possess the necessary domains of knowledge, the relevant scientific perspectives (which, among other factors, can be influenced by work history and affiliation), and the collective breadth of experience to adequately address the charge. In forming this expert panel, the SAB Staff Office will consider public comments on the List of Candidates, information provided by the candidates themselves, and background information independently gathered by the SAB Staff Office. Selection criteria to be used for panel membership include: (a) Scientific and/or technical expertise, knowledge, and experience (primary factors); (b) availability and willingness to serve; (c) absence of financial conflicts of interest; (d) absence of an appearance of a loss of impartiality; (e) skills working in committees, subcommittees and advisory panels; and, (f) for the panel as a whole, diversity of expertise and scientific points of view.

The SAB Staff Office's evaluation of an absence of financial conflicts of interest will include a review of the ''Confidential Financial Disclosure Form for Special Government Employees Serving on Federal Advisory Committees at the U.S. Environmental Protection Agency'' (EPA Form 3110–48). This confidential form allows government officials to determine whether there is a statutory conflict between a person's public responsibilities (which include membership on an EPA federal advisory committee) and private interests and activities, or the appearance of a loss of impartiality, as defined by federal regulation. The form may be viewed and downloaded from the following URL address *http://yosemite.epa.gov/sab/sabproduct.nsf/Web/ethics?OpenDocument.*

The approved policy under which the EPA SAB Office selects members for subcommittees and review panels is described in the following document: *Overview of the Panel Formation Process at the Environmental Protection Agency Science Advisory Board* (EPA–SAB–EC–02–010), which is posted on the SAB Web site at *http://www.epa.gov/sab/pdf/ec02010.pdf.*

Dated: January 16, 2014.

Christopher Zarba,

Director, Science Advisory Board Staff Office.

[FR Doc. 2014–01586 Filed 1–27–14; 8:45 am]

BILLING CODE 6560–50–P

EQUAL EMPLOYMENT OPPORTUNITY COMMISSION

Agency Information Collection Activities

AGENCY: Equal Employment Opportunity Commission.

ACTION: Notice of Information Collection—Extension Without Change: Elementary-Secondary Staff Information Report (EEO–5).

SUMMARY: In accordance with the Paperwork Reduction Act (PRA), the Equal Employment Opportunity Commission (EEOC or Commission) announces that it intends to submit to the Office of Management and Budget (OMB) a request for a three-year extension without change of the Elementary-Secondary Staff Information Report (EEO–5).

DATES: Written comments on this notice must be submitted on or before March 31, 2014.

ADDRESSES: Comments should be sent to Bernadette Wilson, Acting Executive Officer, Executive Secretariat, Equal Employment Opportunity Commission, 131 M Street NE., Washington, DC 20507. As a convenience to commenters, the Executive Secretariat will accept comments totaling six or fewer pages by facsimile (''FAX'') machine. This limitation is necessary to assure access to the equipment. The telephone number of the fax receiver is (202) 663–4114. (This is not a toll-free number). Receipt of FAX transmittals will not be acknowledged, except that the sender may request confirmation of receipt by calling the Executive Secretariat staff at (202) 663–4070 (voice) or (202) 663–4074 (TTD). (These are not toll-free telephone numbers.) Instead of sending written comments to EEOC, you may submit comments and attachments electronically at *http://www.regulations.gov,* which is the Federal eRulemaking Portal. Follow the instructions online for submitting comments. All comments received through this portal will be posted without change, including any personal information you provide. Copies of comments submitted by the public to EEOC directly or through the Federal eRulemaking Portal will be available for review, by advance appointment only, at the Commission's library between the hours of 9:00 a.m. and 5 p.m. or can be reviewed at *http://www.regulations.gov.* To schedule an appointment to inspect the comments at EEOC's library, contact the library staff at (202) 663–4630 (voice) or (202) 663–4641 (TTY). (These are not toll-free numbers.)

FOR FURTHER INFORMATION CONTACT: Ronald Edwards, Director, Program Research and Surveys Division, 131 M Street NE., Room 4SW30F, Washington, DC 20507; (202) 663–4949 (voice) or (202) 663–7063 (TTY).

SUPPLEMENTARY INFORMATION: Pursuant to the Paperwork Reduction Act of 1995 and OMB regulations *5 CFR 1320.8*(d)(1), the Commission solicits public comment to enable it to:

(1) Evaluate whether the proposed collection of information is necessary for the proper performance of the Commission's functions, including whether the information will have practical utility;

(2) Evaluate the accuracy of the Commission's estimate of the burden of the proposed collection of information, including the validity of the methodology and assumptions used;

(3) Enhance the quality, utility, and clarity of the information to be collected; and

(4) Minimize the burden of the collection of information on those who are to respond, including the use of appropriate automated, electronic, mechanical, or other technological collection techniques or other forms of information technology, e.g., permitting electronic submission of responses.

Overview of Information Collection

Collection Title: Elementary-Secondary Staff Information Report (EEO–5).

OMB-Number: 3046–0003.

Frequency of Report: Biennial.

Type of Respondent: Certain public elementary and secondary school districts.

Description of Affected Public: Certain public elementary and secondary school districts.

Number of Responses: 6,190.

Estimated Burden Hours: 15,475.

Cost to the Respondents: $0.

Federal Cost: $190,000.

Number of Forms: 1

Form Number: EEOC Form 168A.

Abstract: Section 709 (c) of Title VII of the Civil Rights Act of 1964, as amended, 42 U.S.C. 2000e–8(c), requires employers to make and keep such records relevant to the determinations of whether unlawful employment practices have been or are being committed, to preserve such records, and to produce such reports as the Commission prescribes by regulation or order. Accordingly, the EEOC issued regulations prescribing the reporting requirements for elementary and secondary public school districts. The EEOC uses EEO–5 data to investigate charges of employment discrimination against elementary and secondary public school districts. The data also are used for research. The data are shared with the Department of Education (Office for Civil Rights) and the Department of Justice. Pursuant to Section 709(d) of Title VII of the Civil Rights Act of 1964, as amended, EEO–5 data also are shared with state and local Fair Employment Practices Agencies (FEPAs).

Revisions to the form that amended the race and ethnicity categories were approved by OMB in 2012. The previously used categories (White, Black, Hispanic, Asian or Pacific Islander, and American Indian or Alaska Native) were replaced with the following: Hispanic or Latino; White; Black or African American; Asian; Native Hawaiian or Other Pacific Islander; American Indian or Alaska Native; and Two or More Races. EEOC is seeking a three year extension without change of the form approved by OMB in 2012.

Burden Statement: The estimated number of respondents included in the biennial EEO–5 survey is 6,190 public elementary and secondary school districts. The form is estimated to impose 15,475 burden hours biennially.

Dated: January 16, 2014.

For the Commission.

Jacqueline A. Berrien,

Chair.

[FR Doc. 2014–01593 Filed 1–27–14; 8:45 am]

BILLING CODE 6570–01–P

EXPORT-IMPORT BANK

[Public Notice 2014–3009]

Agency Information Collection Activities: Comment Request

AGENCY: Export-Import Bank of the United States.

ACTION: Submission for OMB review and comments request.

Form Title: EIB 14–01 Small Business Exporter Survey.

SUMMARY: The Export-Import Bank of the United States (Ex-Im Bank), as a part of its continuing effort to reduce paperwork and respondent burden, invites the general public and other Federal Agencies to comment on the proposed information collection, as required by the Paperwork Reduction Act of 1995.

The small business exporter survey seeks to obtain feedback from customers on trade credit insurance policy purchases made in a Fiscal Year. This survey will help Ex-Im Bank better understand small business customers' perspectives on the bank's products, the level of service provided, and how Ex-Im Bank's assistance impacts their small business. The objective is to identify possible service improvements and better understand small business owners' experiences working with Ex-Im Bank.

The survey can be reviewed at: *https://www.surveymonkey.com/s/SBCustomerSurvey*

DATES: Comments should be received on or before February 27, 2014.

ADDRESSES: Comments may be submitted electronically on *www.regulation.gov* or by mail to Office of Information and Regulatory Affairs, 725 17th Street NW., Washington, DC 20038 Attn: OMB 3048–14–01.

SUPPLEMENTARY INFORMATION:

Titles and Form Number: EIB 14–01 Small Business Exporter Survey.

OMB Number: 3048–XXXX.

Type of Review: Regular.

Need and Use: The information requested enables Ex-Im Bank to identify possible service improvements to the benefit of small business exporters.

The number of respondents: 1,808.

Estimated time per respondents: 10 minutes.

The frequency of response: Annually.

Annual hour burden: 301.3 total hours.

Government Expenses

Reviewing time per response: 5 minutes.

Responses per year: 1,808.

Reviewing time per year: 150.7 hours.

Average wages per hour: $42.50.

*Average cost per year: (time * wages)* $6,403.

Benefits and overhead: 20%.

Total Government Cost: $7,684.

Alla Lake,

Clearance Officer, Records Management Division.

[FR Doc. 2014–01544 Filed 1–27–14; 8:45 am]

BILLING CODE 6690–01–P

FEDERAL DEPOSIT INSURANCE CORPORATION

Agency Information Collection Activities: Submission for OMB Review; Comment Request: Guidance on Sound Incentive Compensation Policies

AGENCY: Federal Deposit Insurance Corporation (FDIC).

ACTION: Notice and request for comment.

SUMMARY: In accordance with the requirements of the Paperwork Reduction Act (PRA) of 1995 (44 U.S.C. chapter 35), the FDIC may not conduct or sponsor, and the respondent is not required to respond to, an information collection unless it displays a currently valid Office of Management and Budget (OMB) control number. As part of its continuing effort to reduce paperwork and respondent burden, the FDIC invites the general public and other Federal agencies to take this opportunity to comment on renewal of an existing information collection, as required by the PRA. On October 22, 2013 (78 FR 62632), the FDIC requested comment for 60 days on renewal of its information collection entitled

Guidance on Sound Incentive Compensation Policies, which is currently approved under OMB Control No. 3064–0175. No comments were received on the proposal to renew. The FDIC hereby gives notice of submission to OMB of its request to renew the collection.

DATES: Comments must be submitted on or before February 27, 2014.

ADDRESSES: Interested parties are invited to submit written comments to the FDIC by any of the following methods:

- *http://www.FDIC.gov/regulations/laws/federal/notices.html*
- *Email: comments@fdic.gov* Include the name of the collection in the subject line of the message.
- *Mail:* Leneta G. Gregorie (202–898–3719), Counsel, Room NYA–5050, Federal Deposit Insurance Corporation, 550 17th Street NW., Washington, DC 20429.
- *Hand Delivery:* Comments may be hand-delivered to the guard station at the rear of the 17th Street Building (located on F Street), on business days between 7 a.m. and 5 p.m.

All comments should refer to the relevant OMB control number. A copy of the comments may also be submitted to the OMB desk officer for the FDIC: Office of Information and Regulatory Affairs, Office of Management and Budget, New Executive Office Building, Washington, DC 20503.

FOR FURTHER INFORMATION CONTACT: Leneta Gregorie, at the FDIC address above.

SUPPLEMENTARY INFORMATION:

Proposal To Renew the Following Currently Approved Collection of Information

Title: Guidance on Sound Incentive Compensation Policies.

OMB Number: 3064–0175.

Frequency of Response: maintenance—annual.

Affected Public: Insured state nonmember banks and state savings associations.

Estimated Number of Respondents: 4346.

Estimated Time per Response: maintenance—40 hours.

Total Annual Burden: 173,840 hours.

General Description of Collection: The Guidance on Sound Incentive Compensation Practices helps ensure that incentive compensation policies at insured state nonmember banks and state savings associations do not encourage excessive risk-taking and are consistent with the safety and soundness of the organization. Under the Guidance, banks are required to: (i) Have policies and procedures that identify and describe the role(s) of the personnel and units authorized to be involved in incentive compensation arrangements, identify the source of significant risk-related inputs, establish appropriate controls governing these inputs to help ensure their integrity, and identify the individual(s) and unit(s) whose approval is necessary for the establishment or modification of incentive compensation arrangements; (ii) create and maintain sufficient documentation to permit an audit of the organization's processes for incentive compensation arrangements; (iii) have any material exceptions or adjustments to the incentive compensation arrangements established for senior executives approved and documented by its board of directors; and (iv) have its board of directors receive and review, on an annual or more frequent basis operation of the organization's incentive compensation system in providing risk-taking incentives that are consistent with the organization's safety and soundness.

Request for Comment

Comments are invited on: (a) Whether the collection of information is necessary for the proper performance of the FDIC's functions, including whether the information has practical utility; (b) the accuracy of the estimates of the burden of the information collection, including the validity of the methodology and assumptions used; (c) ways to enhance the quality, utility, and clarity of the information to be collected; and (d) ways to minimize the burden of the information collection on respondents, including through the use of automated collection techniques or other forms of information technology. All comments will become a matter of public record.

Dated at Washington, DC, this 23rd day of January, 2014.

Federal Deposit Insurance Corporation.

Robert E. Feldman,

Executive Secretary.

[FR Doc. 2014–01569 Filed 1–27–14; 8:45 am]

BILLING CODE 6714–01–P

FEDERAL ELECTION COMMISSION

Sunshine Act Meetings

AGENCY: Federal Election Commission.

TIME AND DATE: Thursday, January 30, 2014 at 10:00 a.m.

PLACE: 999 E Street, NW., Washington, DC (ninth floor).

STATUS: This meeting will be open to the public.

MATTERS TO BE CONSIDERED:

Audit Division Recommendation Memorandum on the Dallas County Republican Party (DCRP) (A11–14)

Audit Division Recommendation Memorandum on the Republican Party of Iowa (RPIA) (A11–24)

Management and Administrative Matters

Individuals who plan to attend and require special assistance, such as sign language interpretation or other reasonable accommodations, should contact Shawn Woodhead Werth, Secretary and Clerk, at (202) 694–1040, at least 72 hours prior to the meeting date.

CONTACT PERSON FOR MORE INFORMATION: Judith Ingram, Press Officer, Telephone: (202) 694–1220.

Shawn Woodhead Werth,

Secretary and Clerk of the Commission.

[FR Doc. 2014–01654 Filed 1–24–14; 11:15 am]

BILLING CODE 6715–01–P

FEDERAL RESERVE SYSTEM

Proposed Agency Information Collection Activities; Comment Request

AGENCY: Board of Governors of the Federal Reserve System.

SUMMARY: On June 15, 1984, the Office of Management and Budget (OMB) delegated to the Board of Governors of the Federal Reserve System (Board) its approval authority under the Paperwork Reduction Act (PRA), pursuant to 5 CFR 1320.16, to approve of and assign OMB control numbers to collection of information requests and requirements conducted or sponsored by the Board under conditions set forth in 5 CFR 1320 Appendix A.1. Board-approved collections of information are incorporated into the official OMB inventory of currently approved collections of information. Copies of the Paperwork Reduction Act Submission, supporting statements and approved collection of information instruments are placed into OMB's public docket files. The Federal Reserve may not conduct or sponsor, and the respondent is not required to respond to, an information collection that has been extended, revised, or implemented on or after October 1, 1995, unless it displays a currently valid OMB control number.

DATES: Comments must be submitted on or before March 31, 2014.

ADDRESSES: You may submit comments, identified by *FR 2225, FR 2226, FR 3054a,b,c,d, FR Y–9C, FR Y–9LP, FR Y–9SP, FR Y–9ES, or FR Y–9CS* by any of the following methods:

• *Agency Web site: http://www.federalreserve.gov.* Follow the instructions for submitting comments at *http://www.federalreserve.gov/apps/foia/proposedregs.aspx.*

• *Federal eRulemaking Portal: http://www.regulations.gov.* Follow the instructions for submitting comments.

• *Email: regs.comments@federalreserve.gov.* Include OMB number in the subject line of the message.

• *FAX:* (202) 452–3819 or (202) 452–3102.

• *Mail:* Robert deV. Frierson, Secretary, Board of Governors of the Federal Reserve System, 20th Street and Constitution Avenue NW., Washington, DC 20551.

All public comments are available from the Board's Web site at *http://www.federalreserve.gov/apps/foia/proposedregs.aspx* as submitted, unless modified for technical reasons. Accordingly, your comments will not be edited to remove any identifying or contact information. Public comments may also be viewed electronically or in paper form in Room MP–500 of the Board's Martin Building (20th and C Streets NW.) between 9 a.m. and 5 p.m. on weekdays.

Additionally, commenters may send a copy of their comments to the OMB Desk Officer—Shagufta Ahmed—Office of Information and Regulatory Affairs, Office of Management and Budget, New Executive Office Building, Room 10235 725 17th Street NW., Washington, DC 20503 or by fax to (202) 395–6974.

FOR FURTHER INFORMATION CONTACT: A copy of the PRA OMB submission, including the proposed reporting form and instructions, supporting statement, and other documentation will be placed into OMB's public docket files, once approved. These documents will also be made available on the Federal Reserve Board's public Web site at: *http://www.federalreserve.gov/apps/reportforms/review.aspx* or may be requested from the agency clearance officer, whose name appears below.

Federal Reserve Board Clearance Officer—Cynthia Ayouch—Office of the Chief Data Officer, Board of Governors of the Federal Reserve System, Washington, DC 20551 (202) 452–3829. Telecommunications Device for the Deaf (TDD) users may contact (202) 263–4869, Board of Governors of the Federal Reserve System, Washington, DC 20551.

SUPPLEMENTARY INFORMATION:

Request for Comment on Information Collection Proposal

The following information collections, which are being handled under this delegated authority, have received initial Board approval and are hereby published for comment. At the end of the comment period, the proposed information collections, along with an analysis of comments and recommendations received, will be submitted to the Board for final approval under OMB delegated authority. Comments are invited on the following:

a. Whether the proposed collection of information is necessary for the proper performance of the Federal Reserve's functions; including whether the information has practical utility;

b. The accuracy of the Federal Reserve's estimate of the burden of the proposed information collection, including the validity of the methodology and assumptions used;

c. Ways to enhance the quality, utility, and clarity of the information to be collected;

d. Ways to minimize the burden of information collection on respondents, including through the use of automated collection techniques or other forms of information technology; and

e. Estimates of capital or start up costs and costs of operation, maintenance, and purchase of services to provide information.

Proposal to Approve Under OMB Delegated Authority the Extension for Three Years, With Revision, of the Following Information Collections

1. Report title: Consolidated Financial Statements for Holding Companies.

Agency form number: FR Y–9C.

OMB control number: 7100–0128.

Frequency: Quarterly.

Reporters: Holding companies (HCs).

Estimated annual reporting hours: FR Y–9C (non Advanced Approaches HCs): 220,366 hours; FR Y–9C (Advanced Approaches Bank Holding Companies (BHCs)): 2,404 hours.

Estimated average hours per response: FR Y–9C (non Advanced Approaches HCs): 48.84 hours; FR Y–9C (Advanced Approaches BHCs): 50.09 hours.

Number of respondents: FR Y–9C (non Advanced Approaches HCs): 1,128; FR Y–9C (Advanced Approaches BHCs): 12.

General description of report: This information collection is authorized pursuant by Section 5(c) of the Bank Holding Company Act [12 U.S.C. 1844(c)]. In addition, 12 U.S.C. 1467a(b)(2)(A) and 1850a(c)(1)(A) authorize the Federal Reserve to require that SLHCs and supervised securities holding companies also file the FR Y–9 series of reports with the Federal Reserve. Overall, the Federal Reserve does not consider the financial data in these reports to be confidential. However, a respondent may request confidential treatment pursuant to sections (b)(4), (b)(6), and (b)(8) of the Freedom of Information Act (FOIA) (5 U.S.C. 552(b)(4), (b)(6), and (b)(8)). The applicability of these exemptions would need to be reviewed on a case by case basis.

Abstract: The FR Y–9 family of reporting forms continues to be the primary source of financial data on HCs that examiners rely on in the intervals between on-site inspections and off-site assessments through the Small Bank Holding Company Supervision Program. Financial data from these reporting forms are used to detect emerging financial problems, to review performance and conduct pre-inspection analysis, to monitor and evaluate capital adequacy, to evaluate HC mergers and acquisitions, and to analyze an HC's overall financial condition to ensure the safety and soundness of its operations.

The FR Y–9C consists of standardized financial statements similar to the Federal Financial Institutions Examination Council (FFIEC) Consolidated Reports of Condition and Income (Call Reports) (FFIEC 031 & 041; OMB No. 7100–0036) filed by commercial banks. It collects consolidated data from HCs, and is filed by top-tier HCs with total consolidated assets of $500 million or more.[1]

Current actions: The Federal Reserve proposes to discontinue the Voluntary Advance Collection of Summary FR Y–9C Data from the Largest BHCs (Advanced Collection). This proposal is based on the following information:

• Since the start of the Advance Collection process in 2004, the FR Y–9C processing time period has shortened by 15 days allowing access to the officially submitted data in a more timely fashion.

• The companies (i.e., the 50 largest BHCs) participating in the process have increased the quality and quantity of data available in their press release information.

• There would be resource savings at the companies and the Federal Reserve as a result of discontinuing the ''Voluntary Advance Collection'' process.

2. Report title: Payments Systems Surveys: Ad Hoc Payments Systems Survey (FR 3054a) and the Currency Functionality Survey (FR 3054d).

Agency form numbers: FR 3054a and FR 3054d.

OMB control number: 7100–0332.

[1] Under certain circumstances described in the General Instructions, HCs with assets under $500 million may be required to file the FR Y–9C.

Frequency: On occasion and annually.

Reporters: Financial, institutions (or depository institutions), individuals, law enforcement and nonfinancial businesses (banknote equipment manufacturers, or global wholesale bank note dealers).

Estimated annual reporting hours: 11,500 hours.

Estimated average hours per response: FR 3054a: 0.75 hours; FR 3054d: 2.5 hours.

Number of respondents: FR 3054a: 12,000; and FR 3054d: 250.

General description of report: This information collection is authorized pursuant to Section 11(d) of the Federal Reserve Act (12 U.S.C. § 248(d)). The obligation to respond to the FR 3054a and FR 3054d is voluntary. Because survey questions may differ from survey to survey, it is difficult to determine whether the information collected will be considered confidential. However, information may be exempt from disclosure under exemption 4 of the FOIA, 5 U.S.C. 552(b)(4), if disclosure would likely have the effect of (1) Impairing the government's ability to obtain the necessary information in the future, or (2) causing substantial harm to the competitive position of the respondent. Additionally, should survey responses contain any information of a private nature the disclosure of which would constitute ''a clearly unwarranted invasion of personal privacy,'' such information may be exempt from disclosure under exemption 6, 5 U.S.C. 552(b)(6). Confidentiality matters should be treated on a case-by-case basis to determine if any of the above exemptions apply.

Abstract: The FR 3054a is an event-driven survey used to obtain information specifically tailored to the Federal Reserve's operational and fiscal agency responsibilities. The FR 3054a may be conducted independently by the Federal Reserve or jointly with another government agency, a Reserve Bank, or a private firm. The FR 3054d is an annual survey used to assess the functionality of Federal Reserve notes in banknote handling equipment. The data collected from the FR 3054d are used as inputs for future designs of Federal Reserve notes. The FR 3054d may be conducted jointly with the U.S. Treasury's Bureau of Engraving and Printing, and the CTO.

Current actions:

FR 3054a Proposed Revision

Since the Payments Systems Surveys were originally approved, the Federal Reserve has assumed additional responsibilities for currency-related activities including, management of the currency education program, which was previously managed by the U.S. Treasury's Bureau of Engraving and Printing, and increased responsibilities for security and tactile feature development. To ensure that the Federal Reserve has the flexibility to collect data from respondents that will inform the Federal Reserve's decision-making on the education program and new banknote designs, Federal Reserve proposes to revise the FR 3054a to increase the number and type of respondents, from which it collects data. In addition, the Federal Reserve's approval of the FR 3067, in July, provides additional burden hours and flexibility to conduct surveys. Federal Reserve proposes to add individuals and law enforcement agencies to its current respondent group, reduce the annual frequency from 10 times to 1 time per year, which reflects its expectation that it will only survey respondents once, reduce the estimated time to complete a survey from 15 hours to 0.75 hours, and increase the number of respondents from 100 to 12,000. Federal Reserve anticipates that the FR 3054a will primarily be used for the currency education program, which will result in asking respondents to answer a small number of very targeted questions that respondents can complete in about thirty minutes, but will require a larger respondent pool to ensure that the public is aware of banknote designs and security features. The FR 3054a may also be used to collect information from the Federal Reserve's stakeholders regarding the societal cost effect of a raised tactile feature on banknotes.

FR 3054d Proposed Revision

Federal Reserve proposes to revise the FR 3054d to include a perception study. Since the Payments Systems Surveys were originally approved, Federal Reserve has employed this survey to conduct numerous surveys with Banknote Equipment Manufacturers' (BEM's) regarding the functionality of banknotes. Federal Reserve plan on conducting follow-up interviews with BEM's and a perception study to determine how individuals use the features of banknotes currently in circulation and potential new features. Federal Reserve proposes to revise the FR 3054d to increase the number and type of respondents from which it collects data. Federal Reserve proposes to (1) rename the survey the Currency Functionality and Perception Survey, (2) include additional respondent groups (such as individuals), (3) increase the frequency of the survey from one time per year to four times per year, (4) reduce the estimated time to complete the survey from 48 hours to 2.5 hours, and (5) increase the number of respondents from 20 to 250. These changes reflect a greater need to gather targeted perception information from individuals rather than conduct face-to-face bilateral discussions with BEM's to obtain very technical information on how the equipment they manufacture determines what denomination a banknote is and if it genuine or counterfeit.

Proposal To Approve Under OMB Delegated Authority the Extension for Three Years, Without Revision, of the Following Reports

1. Report title: Annual Daylight Overdraft Capital Report for U.S. Branches and Agencies of Foreign Banks.

Agency form number: FR 2225.

OMB control number: 7100–0216.

Frequency: Annually.

Reporters: Foreign banking organizations (FBO).

Estimated annual reporting hours: 51 hours.

Estimated average hours per response: 1 hour.

Number of respondents: 51.

General description of report: This information collection is authorized pursuant by sections 11(i), 16, and 19(f) of the Federal Reserve Act (12 U.S.C. 248(i), 248–1 and 464). An FBO is required to respond in order to obtain or retain a benefit, i.e., in order for the U.S. branch or agency of an FBO to establish and maintain a non-zero net debit cap. The information submitted by respondents is not confidential; however, respondents may request confidential treatment for portions of the report. Data may be considered confidential and exempt from disclosure under section (b)(4) of the FOIA if it constitutes commercial or financial information and public disclosure could result in substantial competitive harm to the submitting institution (5 U.S.C. 552(b)(4)).

Abstract: This report was implemented in March 1986 as part of the procedures used to administer the Federal Reserve's Payment System Risk (PSR) policy. A key component of the PSR policy is a limit, or a net debit cap, on an institution's negative intraday balance in its Reserve Bank account. The Federal Reserve calculates an institution's net debit cap by applying the multiple associated with the net debit cap category to the institution's capital. For FBOs, a percentage of the FBO's capital measure, known as the U.S. capital equivalency, is used to calculate the FBO's net debit cap. FBOs that wish to establish a positive net

debit cap and have a strength of support assessment (SOSA) 1 or SOSA 2 ranking or hold a financial holding company (FHC) designation are required to submit the FR 2225 to their Administrative Reserve Bank (ARB).[2] [3]

2. Report title: Report of Net Debit Cap.

Agency form number: FR 2226.

OMB control number: 7100–0217.

Frequency: Annually.

Reporters: Depository institution's board of directors.

Estimated annual reporting hours: 1,158 hours.

Estimated average hours per response: 1 hour.

Number of respondents: De Minimis Cap: 1,016; Self-Assessment Cap; [4] 139; Maximum Daylight Overdraft Capacity: 3.

General description of report: This information collection is authorized pursuant to sections 11, 16, and 19 of the Federal Reserve Act (12 U.S.C. § 248(i), § 248–1 and § 464) authorize the Board to require the FR 2226 resolutions. Disclosure of information collected on the FR 2226 would likely cause substantial harm to the competitive position of the respondent institution. Therefore, the FR 2226 is exempt from disclosure under exemption (b)(4) of the FOIA, which exempts from disclosure ''trade secrets and commercial or financial information obtained from a person and privileged or confidential.'' (5 U.S.C. 552(b)(4)). In addition, information reported in connection with the second and third resolutions may be protected under section (b)(8) of FOIA, to the extent that such information is based on the institution's CAMELS rating, and thus is related to examination reports prepared by, on behalf of, or for the use of an agency responsible for the regulation or supervision of financial institutions (5 U.S.C. 552(b)(8)).

Abstract: Federal Reserve Banks collect these data annually to provide information that is essential for their administration of the Federal Reserve's PSR policy. The reporting panel includes the subset of financially healthy depository institutions with access to the discount window that opt to request a De minis of self-assessed cap under the PSR Policy. The Report of Net Debit Cap comprises three resolutions, which are filed by a depository institution's board of directors depending on its needs. The first resolution is used to establish a de minimis net debit cap and the second resolution is used to establish a self-assessed net debit cap.[5] The third resolution is used to establish simultaneously a self-assessed net debit cap and maximum daylight overdraft capacity. The PSR policy requires depository institutions to submit their resolutions annually, as of the date of the board of directors' approved resolution(s).

3. Report title: The Parent Company Only Financial Statements for Large Holding Companies (FR Y–9LP), the Parent Company Only Financial Statements for Small Holding Companies (FR Y–9SP), the Financial Statements for Employee Stock Ownership Plan Holding Companies (FR Y–9ES), the Supplement to the Consolidated Financial Statements for Holding Companies (FR Y–9CS).

Agency form number: FR Y–9LP, FR Y–9SP, FR Y–9ES, FR–9CS.

OMB control number: 7100–0128.

Frequency: Quarterly, semi-annually, annually, and quarterly.

Reporters: Holding companies.

Estimated annual reporting hours: FR Y–9LP: 29,148 hours; FR Y–9SP (BHCs): 41,008 hours; FR Y–9SP (Savings and Loan Holding Companies (SLHCs)): 8,435 hours; FR Y–9ES: 43 hours; FR–9CS: 472 hours.

Estimated average hours per response: FR Y–9LP: 5.25 hours; FR Y–9SP (BHCs): 5.40 hours; FR Y–9SP (SLHCs): 14.20 hours; FR Y–9ES: 0.50 hours; FR–9CS: 0.50 hours.

Number of respondents FR Y–9LP: 1,388; FR Y–9SP (BHCs): 3,797; FR Y–9SP (SLHCs): 297; FR Y–9ES: 86; FR–9CS: 236.

General description of report: This information collection is authorized pursuant by Section 5(c) of the Bank Holding Company Act [12 U.S.C. § 1844(c)]. In addition, 12 U.S.C. §§ 1467a(b)(2)(A) and 1850a(c)(1)(A) authorize the Federal Reserve to require that SLHCs and supervised securities holding companies also file the FR Y–9 series of reports with the Federal Reserve. Overall, the Federal Reserve does not consider the financial data in these reports to be confidential. However, a respondent may request confidential treatment pursuant to sections (b)(4), (b)(6), and (b)(8) of the Freedom of Information Act (FOIA) (5 U.S.C. §§ 552(b)(4), (b)(6), and (b)(8)). The applicability of these exemptions would need to be reviewed on a case by case basis.

Abstract: The FR Y–9LP and FR Y–9SP serve as standardized financial statements for the consolidated HC and its parent; the FR Y–9ES is a financial statement for HCs that are Employee Stock Ownership Plans (ESOPs). The Board also has the authority to use the FR Y–9CS (a free-form supplement) to collect additional information deemed to be (1) critical and (2) needed in an expedited manner.

The FR Y–9 family of reporting forms continues to be the primary source of financial data on HCs that examiners rely on in the intervals between on-site inspections and off-site assessments through the Small Bank Holding Company Supervision Program. Financial data from these reporting forms are used to detect emerging financial problems, to review performance and conduct pre-inspection analysis, to monitor and evaluate capital adequacy, to evaluate HC mergers and acquisitions, and to analyze an HC's overall financial condition to ensure the safety and soundness of its operations.

4. Report title: Payments Systems Surveys: Currency Quality Sampling Survey (FR 3054b) and the Currency Quality Survey (FR 3054c).

Agency form numbers: FR 3054b and FR 3054c.

OMB control number: 7100–0332.

Frequency: Annually and semi-annually.

Reporters: Financial, institutions (or depository institutions) individuals, law enforcement and nonfinancial businesses (banknote equipment manufacturers, or global wholesale bank note dealers).

Estimated annual reporting hours: 1,590 hours.

Estimated average hours per response: FR 3054b: 0.5 hours and FR 3054c: 30 hours.

Number of respondents: FR 3054b: 180 and FR 3054c: 25.

General description of report: This information collection is authorized pursuant to Section 11(d) of the Federal Reserve Act (12 U.S.C. § 248(d)). The

[2] The Administrative Reserve Bank is responsible for managing an institution's account relationship with the Federal Reserve.

[3] Most FBOs that are ranked SOSA 3 do not qualify for a positive net debit cap. In the event a Reserve Bank grants a net debit cap or extends intraday credit to a financially healthy SOSA 3-ranked FBO, the financially healthy SOSA 3-ranked FBOs will have their U.S. capital equivalency based on their ''Net due to related depository institutions'' as reported on the Report of Assets and Liabilities of U.S. Branches and Agencies of Foreign Banks (FFIEC 002), Schedule RAL, Item 5.a, Column A, for the most recent quarter.

[4] Self-assessment cap figures do not include those self-assessed cap respondents with maximum daylight overdraft capacity.

[5] Institutions use these two resolutions to establish a capacity for daylight overdrafts above the lesser of $10 million or 20 percent of the institution's capital measure. Financially healthy U.S. chartered institutions that rarely incur daylight overdrafts in excess of the lesser of $10 million or 20 percent of the institution's capital measure do not need to file board of directors' resolutions or self-assessments with their Reserve Bank.

obligation to respond to the FR 3054b and FR 3054c is voluntary. Because survey questions may differ from survey to survey, it is difficult to determine whether the information collected will be considered confidential. However, information may be exempt from disclosure under exemption 4 of the Freedom of Information Act, 5 U.S.C. § 552(b)(4), if disclosure would likely have the effect of (1) impairing the government's ability to obtain the necessary information in the future, or (2) causing substantial harm to the competitive position of the respondent. Additionally, should survey responses contain any information of a private nature the disclosure of which would constitute ''a clearly unwarranted invasion of personal privacy,'' such information may be exempt from disclosure under exemption 6, 5 U.S.C. § 552(b)(6). Confidentiality matters should be treated on a case-by-case basis to determine if any of the above exemptions apply.

Abstract: The FR 3054b is an annual survey used to assess the quality of currency in circulation and may be conducted by the Federal Reserve, jointly with the Federal Reserve Bank of San Francisco's Cash Product Office (CPO), the Federal Reserve Bank of Richmond's Currency Technology Office (CTO), and each Reserve Bank's cash department. The FR 3054c is a semi-annual survey used to determine depository institutions' and Banknote Equipment Manufacturers' opinions of currency quality and may be conducted jointly with the CPO and CTO.

Board of Governors of the Federal Reserve System, January 23, 2014.

Robert deV. Frierson,

Secretary of the Board.

[FR Doc. 2014–01582 Filed 1–27–14; 8:45 am]

BILLING CODE 6210–01–P

FEDERAL RESERVE SYSTEM

Change in Bank Control Notices; Acquisitions of Shares of a Bank or Bank Holding Company

The notificants listed below have applied under the Change in Bank Control Act (12 U.S.C. 1817(j)) and § 225.41 of the Board's Regulation Y (12 CFR 225.41) to acquire shares of a bank or bank holding company. The factors that are considered in acting on the notices are set forth in paragraph 7 of the Act (12 U.S.C. 1817(j)(7)).

The notices are available for immediate inspection at the Federal Reserve Bank indicated. The notices also will be available for inspection at the offices of the Board of Governors. Interested persons may express their views in writing to the Reserve Bank indicated for that notice or to the offices of the Board of Governors. Comments must be received not later than February 12, 2014.

A. Federal Reserve Bank of Atlanta (Chapelle Davis, Assistant Vice President) 1000 Peachtree Street, NE., Atlanta, Georgia 30309:

1. *Frank Joseph Hanna, Jr.,* Summerville, Georgia; to acquire voting shares of Urban Trust Holdings, Inc., and thereby indirectly acquire voting shares of Urban Trust Bank, both in Lake Mary, Florida.

B. Federal Reserve Bank of Minneapolis (Jacqueline K. Brunmeier, Assistant Vice President) 90 Hennepin Avenue, Minneapolis, Minnesota 55480–0291:

1. *Gloria S. Sundquis*t, individually, Carl E. Sundquist, both of Cut Bank, Montana; Mary Lou Gordon, Great Falls, Montana; and Carrie L. Vollrath, Conrad, Montana, as members of the Sundquist Family Group; to retain voting shares of Dutton Bancorporation, Inc., and thereby indirectly retain voting shares of Dutton State Bank, both in Dutton, Montana.

2. *Mark Stephens, Dutton, Montana; Chris Stephens, Great Falls, Montana; Andrea S. Swing, Manhattan, Montana; and Tyler Stephens, Augusta, Montana, as a group acting in concert with Robert E. Stephens and Robert Stephens, Jr.,* all as members of The Stephens Family Group; to retain voting shares of Dutton Bancorporation, Inc., and thereby indirectly retain voting shares of Dutton State Bank, both in Dutton, Montana.

3. *Robert Kruse, Saint Clair, Minnesota, and William Miller,* Saint Peter, Minnesota; to acquire voting shares of Saint Clair Agency, Inc., and thereby indirectly acquire voting shares of Saint Clair State Bank, both in Saint Clair, Minnesota.

C. Federal Reserve Bank of Kansas City (Dennis Denney, Assistant Vice President) 1 Memorial Drive, Kansas City, Missouri 64198–0001:

1. *Beth Ann Niketas, Plano, Texas; and Brian Shipp, Idabel, Oklahoma; as individuals and as members of the Shipp family group, and/or as trustees of the following trusts: the Mackenzie Shipp Trust, the Harrison Shipp Trust, the Shelby Niketas Trust, the Craig Holman Trust, the Alec Niketas Trust, the John Niketas Trust, and the Kathryn Holman Trust,* all of Idabel, Oklahoma (all of which were created under the Shipp Grandchildren Irrevocable Trust Agreement of 1996); to retain voting shares of Southeast Capital Corporation, and thereby indirectly retain voting shares of Idabel National Bank, both in Idabel, Oklahoma.

D. Federal Reserve Bank of Dallas (E. Ann Worthy, Vice President) 2200 North Pearl Street, Dallas, Texas 75201–2272:

1. *Linda Ellis McGarraugh, individually, and together with Benjamin Drew Ellis, II, Dennis Scott McGarraugh, all of Perryton, Texas; Drew S. McGarraugh, Kris McGarraugh Wooten, both of Edmond, Oklahoma; Carl W. Ellis, Imperial Beach, California, as Trustee of the Carl Ellis Separate Property FPB Stock Revocable Trust and as Co-Trustee of the Ellis Family Trust; and Julianne Ellis, Imperial Beach, California, as Co-Trustee of the Ellis Family Trust; the Carl Ellis Separate Property FPB Stock Revocable Trust, Perryton, Texas; and the Ellis Family Trust, Imperial Beach, California;* to acquire voting shares of FirstPerryton Bancorp, Inc., Perryton, Texas, and thereby indirectly acquire voting shares of FirstBank Southwest, Amarillo, Texas.

Board of Governors of the Federal Reserve System, January 23, 2014.

Michael J. Lewandowski,

Associate Secretary of the Board.

[FR Doc. 2014–01550 Filed 1–27–14; 8:45 am]

BILLING CODE 6210–01–P

FEDERAL RESERVE SYSTEM

Formations of, Acquisitions by, and Mergers of Bank Holding Companies

The companies listed in this notice have applied to the Board for approval, pursuant to the Bank Holding Company Act of 1956 (12 U.S.C. 1841 *et seq.*) (BHC Act), Regulation Y (12 CFR Part 225), and all other applicable statutes and regulations to become a bank holding company and/or to acquire the assets or the ownership of, control of, or the power to vote shares of a bank or bank holding company and all of the banks and nonbanking companies owned by the bank holding company, including the companies listed below.

The applications listed below, as well as other related filings required by the Board, are available for immediate inspection at the Federal Reserve Bank indicated. The applications will also be available for inspection at the offices of the Board of Governors. Interested persons may express their views in writing on the standards enumerated in the BHC Act (12 U.S.C. 1842(c)). If the proposal also involves the acquisition of a nonbanking company, the review also includes whether the acquisition of the nonbanking company complies with the standards in section 4 of the BHC Act

(12 U.S.C. 1843). Unless otherwise noted, nonbanking activities will be conducted throughout the United States.

Unless otherwise noted, comments regarding each of these applications must be received at the Reserve Bank indicated or the offices of the Board of Governors not later than February 21, 2014.

A. Federal Reserve Bank of Dallas (E. Ann Worthy, Vice President) 2200 North Pearl Street, Dallas, Texas 75201–2272:

1. *SSB Bancshares, Inc.,* Anahuac, Texas; to become a bank holding company by acquiring 100 percent of the voting shares of Security State Bank, Anahuac, Texas.

Board of Governors of the Federal Reserve System, January 23, 2014.

Michael J. Lewandowski,

Associate Secretary of the Board.

[FR Doc. 2014–01549 Filed 1–27–14; 8:45 am]

BILLING CODE 6210–01–P

DEPARTMENT OF HEALTH AND HUMAN SERVICES

Centers for Medicare & Medicaid Services

Privacy Act of 1974, CMS Computer Match No. 2013–03, HHS Computer Match No. 1314, SSA Computer Match No. 1048, IRS Project No. 241

AGENCY: Department of Health and Human Services (HHS), Centers for Medicare & Medicaid Services (CMS).

ACTION: Notice of Computer Matching Program (CMP).

SUMMARY: In accordance with the requirements of the Privacy Act of 1974, as amended, this notice announces the establishment of a Computer Matching Program that CMS plans to conduct with the Social Security Administration (SSA) and the Internal Revenue Service (IRS), a Bureau of the Department of Treasury.

EFFECTIVE DATES: Comments are invited on all portions of this notice. Public comments are due 30 days after publication. The matching program will become effective no sooner than 40 days after the report of the matching program is sent to the Office of Management and Budget (OMB) and Congress, or 30 days after publication in the **Federal Register**, whichever is later.

ADDRESSES: The public should send comments to: CMS Privacy Officer, Division of Privacy Policy, Privacy Policy and Compliance Group, Office of E-Health Standards & Services, Offices of Enterprise Management, CMS, Room S2–24–25, 7500 Security Boulevard, Baltimore, Maryland 21244–1850. Comments received will be available for review at this location, by appointment, during regular business hours, Monday through Friday from 9:00 a.m.–3:00 p.m., Eastern Time zone.

FOR FURTHER INFORMATION CONTACT: Richard Mazur, Technical Advisor, Office of Financial Management, Financial Services Group, Division of Medicare Secondary Payer Program Operations, CMS, Mail Stop C3–14–16, 7500 Security Boulevard, Baltimore, Maryland 21244–1850, Office Phone: (410) 786–1418, Facsimile: (410) 786–7030, E-Mail: *Richard.Mazur2@cms.hhs.gov.*

SUPPLEMENTARY INFORMATION: The Computer Matching and Privacy Protection Act of 1988 (Pub. L. 100–503), amended the Privacy Act (5 U.S.C. 552a) by describing the manner in which computer matching involving Federal agencies could be performed and adding certain protections for individuals applying for and receiving Federal benefits. Section 7201 of the Omnibus Budget Reconciliation Act of 1990 (Pub. L. 101–508) further amended the Privacy Act regarding protections for such individuals. The Privacy Act, as amended, regulates the use of computer matching by Federal agencies when records in a system of records (SOR) are matched with other Federal, state, or local government records. It requires Federal agencies involved in computer matching programs to:

1. Negotiate written agreements with the other agencies participating in the matching programs;

2. Obtain the Data Integrity Board approval of the match agreements;

3. Furnish detailed reports about matching programs to Congress and OMB;

4. Notify applicants and beneficiaries that the records are subject to matching; and,

5. Verify match findings before reducing, suspending, terminating, or denying an individual's benefits or payments.

This matching program meets the requirements of the Privacy Act of 1974, as amended.

Dated: January 17, 2014.

Timothy Love,

Chief Operating Officer, Centers for Medicare & Medicaid Services.

CMS Computer Match No. 2013–03

HHS Computer Match No. 1314

SSA Computer Match No. 1048

IRS Project No. 241

NAME

''Computer Matching Agreement between the Department of the Treasury, Internal Revenue Services, and the Social Security Administration and the Department of Health and Human Services, Centers for Medicare & Medicaid Services for the Medicare Secondary Payer Program''

SECURITY CLASSIFICATION

Unclassified

PARTICIPATING AGENCIES

Department of Treasury, Internal Revenue Service (IRS); Social Security Administration (SSA); and the Department of Health and Human Services (HHS), Centers for Medicare & Medicaid Services (CMS).

AUTHORITY FOR CONDUCTING MATCHING PROGRAM

Section 6103(l)(12) of the Internal Revenue Code (IRC) (26 U.S.C. 6103(1)(12)), and section 1862(b)(5) of the Social Security Act (42 U.S.C. 1395y(b)(5)) implements the information matching provisions of the matching program.

Section 1106 of the Social Security Act (42 U.S.C. 1306) permits the disclosure of SSA data under this matching program.

PURPOSE(S) OF THE MATCHING PROGRAM

The purpose of this matching program is to establish the conditions under which: (1) IRS agrees to disclose return information relating to taxpayer identity to SSA, and (2) SSA agrees to disclose return information relating to beneficiary and employer identity, commingled with information disclosed by the IRS, to CMS.

These disclosures will provide CMS with information to determine the extent to which any Medicare beneficiary is covered under any Group Health Plan (GHP).

DESCRIPTION OF RECORDS TO BE USED IN THE MATCHING PROGRAM

The matching program will be conducted with data maintained by CMS in the following SORs:

- Medicare Advantage Prescription Drug (MARx) System, CMS System No.

09–70–0588, published at 76 FR 47190 (August 4, 2011);

- Medicare Multi-Carrier Claims System (MCS), CMS System No. 09–70–0501, published at 71 FR 64968 (November 6, 2006);
- Fiscal Intermediary Shared System (FISS), CMS System No. 09–70–0503, published at 71 FR 64961 (November 6, 2006);
- Common Working File (CWF), CMS System No. 09–70–0526, published at 71 FR 64955 (November 6, 2006);
- National Claims History (NCH), CMS System No. 09–70–0558, published at 71 FR 67137 (November 20, 2006).

The matching program will also be conducted with data maintained by IRS in CADE (Customer Account Data Engine) Individual Master File (IMF), Treasury/IRS 24.030, published at 77 FR 47946–947 (August 10, 2012); and SSA in Master Beneficiary Record (MBR), SSA/ORSIS 60–0090, published at 71 FR 1826 (January 11, 2006) and Earnings Recording and Self-Employment Income System, SSA 60–0059, referred to as the Master Earnings File (MEF), published at 71 FR 1819 (January 11, 2006).

INCLUSIVE DATES OF THE MATCH

This Computer Matching Program will become effective no sooner than 40 days after the report of the matching program is sent to OMB and Congress, or 30 days after publication in the **Federal Register**, whichever is later. The matching program will continue for 18 months from the effective date and may be extended for an additional 12 months thereafter, if certain conditions are met.

[FR Doc. 2014–01566 Filed 1–27–14; 8:45 am]

BILLING CODE 4120–03–P

DEPARTMENT OF HEALTH AND HUMAN SERVICES

Administration for Children and Families

Proposed Information Collection Activity; Comment Request

Proposed Projects:

Title: Community Services Block Grant(CSBG)Program Model Plan Application.

OMB No.: 0970–0382.

Description: Sections 676 and 677 of the Community Services Block Grant Act require States, including the District of Columbia and the Commonwealth of Puerto Rico, Tribes, Tribal organizations and U.S. territories applying for Community Services Block Grant (CSBG) funds to submit an application and plan (Model Application Plan). The application plan must meet statutory requirements prior to being funded with CSBG funds. Applicants have the option to submit a detailed application annually or biannually. Entities that submit a biannual application must provide an abbreviated application the following year if substantial changes to the initial application will occur. OMB renewal is being sought.

Respondents: State Governments, including the District of Columbia and the Commonwealth of Puerto Rico, Tribal Governments, Tribal Organizations, and U.S. territories.

ANNUAL BURDEN ESTIMATES

Instrument	Number of respondents	Number of responses per respondent	Average burden hours per response	Total burden hours
Model State CSBG Application	56	1	10	560
Model Indian Tribes & Tribal Organizations CSBG Application	30	1	10	300

Estimated Total Annual Burden Hours: 860.

In compliance with the requirements of Section 506(c)(2)(A) of the Paperwork Reduction Act of 1995, the Administration for Children and Families is soliciting public comment on the specific aspects of the information collection described above. Copies of the proposed collection of information can be obtained and comments may be forwarded by writing to the Administration for Children and Families, Office of Planning, Research and Evaluation, 370 L'Enfant Promenade SW., Washington, DC 20447, Attn: ACF Reports Clearance Officer. Email address: *infocollection@acf.hhs.gov*. All requests should be identified by the title of the information collection.

The Department specifically requests comments on: (a) Whether the proposed collection of information is necessary for the proper performance of the functions of the agency, including whether the information shall have practical utility; (b) the accuracy of the agency's estimate of the burden of the proposed collection of information; (c) the quality, utility, and clarity of the information to be collected; and (d) ways to minimize the burden of the collection of information on respondents, including through the use of automated collection techniques or other forms of information technology. Consideration will be given to comments and suggestions submitted within 60 days of this publication.

Robert Sargis,

Reports Clearance Officer.

[FR Doc. 2014–01570 Filed 1–27–14; 8:45 am]

BILLING CODE 4184–01–P

DEPARTMENT OF HEALTH AND HUMAN SERVICES

Health Resources and Services Administration

Agency Information Collection Activities: Submission to OMB for Review and Approval; Public Comment Request

AGENCY: Health Resources and Services Administration, HHS.

ACTION: Notice.

SUMMARY: In compliance with Section 3507(a)(1)(D) of the Paperwork Reduction Act of 1995, the Health Resources and Services Administration (HRSA) has submitted an Information Collection Request (ICR) to the Office of Management and Budget (OMB) for review and approval. Comments submitted during the first public review of this ICR will be provided to OMB. OMB will accept further comments from the public during the review and approval period.

DATES: Comments on this ICR should be received within 30 days of this notice.

ADDRESSES: Submit your comments, including the Information Collection Request Title, to the desk officer for HRSA, either by email to *OIRA_submission@omb.eop.gov* or by fax to 202–395–5806.

FOR FURTHER INFORMATION CONTACT: To request a copy of the clearance requests submitted to OMB for review, email the HRSA Information Collection Clearance Officer at *paperwork@hrsa.gov* or call (301) 443–1984.

SUPPLEMENTARY INFORMATION:

Information Collection Request Title: Nurse Faculty Loan Program (NFLP)—Annual Performance Report Financial Data Form.

OMB No.: 0915–0314—Revision.

Abstract: This clearance request is for approval of a revision to the Nurse Faculty Loan Program, Annual Performance Report (NFLP–APR) Financial Data Form. The form was previously titled the Nurse Faculty Loan Program, Annual Operating Report (NFLP–AOR).

Need and Proposed Use of the Information: The online NFLP–APR Financial Data Form is an online form that exists in the HRSA Electronic Handbooks (EHBs) Performance Report module as part of the NFLP, BHPr performance report under OMB Approval No: 0915–0061, expiration date: June 30, 2016. The revised NFLP–APR Financial Data Form will collect less data from applicants and will no longer include nursing student demographic data that was previously included. The nursing student demographic data is currently collected under OMB Approval No: 0915–0149. The revised NFLP–APR Financial Data Form will only collect financial data to capture the NFLP loan fund account activity related to financial receivables, disbursements, and borrower account data for employment status, loan cancellation, loan repayment, and collections. Participating schools will provide the federal government with current and cumulative information on: (1) NFLP loan funds received, (2) number and amount of NFLP loans made, (3) number and amount of loans collected, (4) number and amount of loans in repayment, (5) loan default rate percent, (6) number of NFLP graduates employed as nurse faculty, and (7) other related loan fund costs and activities.

Under Title VIII, section 846A of the Public Health Service Act, as amended by Public Law 111–148, the Secretary of Health and Human Services (HHS) enters into an agreement with a school of nursing and makes an award to the school. The award is used to establish a distinct account for the NFLP loan fund at the school. The school of nursing makes loans from the NFLP loan fund account to students enrolled full-time or part-time in a master's or doctoral nursing education program that will prepare them to become qualified nursing faculty. Following graduation from the NFLP lending school, loan recipients may receive up to 85 percent NFLP loan cancellation over a consecutive 4-year period in exchange for service as full-time faculty at a school of nursing. The NFLP lending school collects any portion of the loan that is not cancelled and any loans that go into repayment, and deposits these monies into the NFLP loan fund to make additional NFLP loans.

The school of nursing must keep records of all NFLP loan fund transactions. The NFLP–APR Financial Data Form is used to monitor grantee performance by collection of information relating to the NFLP loan fund operations and financial activities for a specified reporting period (July 1 through June 30, of the academic year). Participating schools are required to complete and submit the NFLP–APR Financial Data Form semi-annually. The data provided in the form are essential for HRSA to effectively monitor the school's use of NFLP funds in accordance with program guidelines. Approval of the revised NFLP–APR Financial Data Form will facilitate our current effort to determine future awards to the school.

The electronic data collection capability will streamline the report submission process, enable an efficient annual performance review process, and serve as a data repository to facilitate reporting on the use of funds and analysis of program outcomes.

Likely Respondents: Participating NFLP schools are required to adhere to reporting requirements.

Burden Statement: Burden in this context means the time expended by persons to generate, maintain, retain, disclose or provide the information requested. This includes the time needed to review instructions; to develop, acquire, install and utilize technology and systems for the purpose of collecting, validating and verifying information, processing and maintaining information, and disclosing and providing information; to train personnel and to be able to respond to a collection of information; to search data sources; to complete and review the collection of information; and to transmit or otherwise disclose the information. The total annual burden hours estimated for this ICR are summarized in the table below.

TOTAL ESTIMATED ANNUALIZED BURDEN-HOURS

Form name	Number of respondents	Number of responses per respondent	Total responses	Average burden per response (in hours)	Total burden hours
NFLP—Annual Performance Report Financial Data Form	250	1	250	8	2,000
Total	250	1	250	8	2,000

Dated: January 22, 2014.

Jackie Painter,

Deputy Director, Division of Policy and Information Coordination.

[FR Doc. 2014–01555 Filed 1–27–14; 8:45 am]

BILLING CODE 4165–15–P

DEPARTMENT OF HEALTH AND HUMAN SERVICES

Health Resources and Services Administration

Agency Information Collection Activities: Proposed Collection: Public Comment Request

AGENCY: Health Resources and Services Administration, HHS.

ACTION: Notice.

SUMMARY: In compliance with the requirement for opportunity for public comment on proposed data collection projects (Section 3506(c)(2)(A) of the Paperwork Reduction Act of 1995), the Health Resources and Services Administration (HRSA) announces plans to submit an Information Collection Request (ICR), described below, to the Office of Management and Budget (OMB). Prior to submitting the ICR to OMB, HRSA seeks comments from the public regarding the burden estimate, below, or any other aspect of the ICR.

DATES: Comments on this Information Collection Request must be received within 60 days of this notice.

ADDRESSES: Submit your comments to *paperwork@hrsa.gov* or mail the HRSA Information Collection Clearance Officer, Room 10–29, Parklawn Building, 5600 Fishers Lane, Rockville, MD 20857.

FOR FURTHER INFORMATION CONTACT: To request more information on the proposed project or to obtain a copy of the data collection plans and draft instruments, email *paperwork@hrsa.gov* or call the HRSA Information Collection Clearance Officer at (301) 443–1984.

SUPPLEMENTARY INFORMATION: When submitting comments or requesting information, please include the information request collection title for reference.

Information Collection Request Title: Reconciliation Tool for the Teaching Health Center Graduate Medical Education Program.

OMB No.: 0915–0342—Extension.

Abstract: The Teaching Health Center Graduate Medical Education (THCGME) program, Section 340H of the Public Health Service (PHS) Act, was established by Section 5508 of Public Law 111–148. The program supports training for primary care residents (including residents in family medicine, internal medicine, pediatrics, internal medicine pediatrics, obstetrics and gynecology, psychiatry, general dentistry, pediatric dentistry, and geriatrics) in community-based ambulatory patient care settings.

The statute provides that eligible Teaching Health Centers receive payments for both direct and indirect expenses associated with training residents in community-based ambulatory patient care centers. Direct medical expenses payments are designed to compensate eligible teaching health centers for those expenses directly associated with resident training, while indirect medical expenses payments are intended to compensate for the additional expenses of training residents in such programs.

Need and Proposed Use of the Information: THCGME payments are prospective payments, and the statute provides for a reconciliation process through which overpayments may be recouped and underpayments may be adjusted at the end of the fiscal year. This data collection instrument will gather information relating to the numbers of residents in THCGME training programs in order to reconcile payments for both direct and indirect expenses.

Likely Respondents: The likely responders to the THCGME Reconciliation Tool are existing THCGME awardees.

Burden Statement: Burden in this context means the time expended by persons to generate, maintain, retain, disclose or provide the information requested. This includes the time needed to review instructions; to develop, acquire, install and utilize technology and systems for the purpose of collecting, validating and verifying information, processing and maintaining information, and disclosing and providing information; to train personnel and to be able to respond to a collection of information; to search data sources; to complete and review the collection of information; and to transmit or otherwise disclose the information. The total annual burden hours estimated for this Information Collection Request are summarized in the table below.

TOTAL ESTIMATED ANNUALIZED BURDEN-HOURS

Form name	Number of respondents	Number of responses per respondent	Total responses	Average burden per response (in hours)	Total burden hours
THCGME Reconciliation Tool	44	1	44	2	88
Total	44	1	44	2	88

HRSA specifically requests comments on (1) the necessity and utility of the proposed information collection for the proper performance of the agency's functions, (2) the accuracy of the estimated burden, (3) ways to enhance the quality, utility, and clarity of the information to be collected, and (4) the use of automated collection techniques or other forms of information technology to minimize the information collection burden.

Dated: January 22, 2014.

Jackie Painter,

Deputy Director, Division of Policy and Information Coordination.

[FR Doc. 2014–01552 Filed 1–27–14; 8:45 am]

BILLING CODE 4165–15–P

DEPARTMENT OF HEALTH AND HUMAN SERVICES

Health Resources and Services Administration

Agency Information Collection Activities: Proposed Collection: Public Comment Request

AGENCY: Health Resources and Services Administration, HHS.

ACTION: Notice.

SUMMARY: In compliance with the requirement for opportunity for public comment on proposed data collection projects (Section 3506(c)(2)(A) of the Paperwork Reduction Act of 1995), the Health Resources and Services Administration (HRSA) announces plans to submit an Information Collection Request (ICR), described below, to the Office of Management and Budget (OMB). Prior to submitting the ICR to OMB, HRSA seeks comments from the public regarding the burden estimate, below, or any other aspect of the ICR.

DATES: Comments on this Information Collection Request must be received within 60 days of this notice.

ADDRESSES: Submit your comments to *paperwork@hrsa.gov* or mail the HRSA Information Collection Clearance Officer, Room 10–29, Parklawn Building, 5600 Fishers Lane, Rockville, MD 20857.

FOR FURTHER INFORMATION CONTACT: To request more information on the proposed project or to obtain a copy of the data collection plans and draft instruments, email *paperwork@hrsa.gov* or call the HRSA Information Collection Clearance Officer at (301) 443–1984.

SUPPLEMENTARY INFORMATION: When submitting comments or requesting information, please include the information request collection title for reference.

Information Collection Request Title: Healthy Start Evaluation and Quality Improvement OMB No. 0915–0338—Revision.

Abstract: The National Healthy Start Program, funded through the Health Resources and Services Administration's (HRSA) Maternal and Child Health Bureau (MCHB), has the goal of reducing disparities in infant mortality and adverse perinatal outcomes. The program began as a demonstration project with 15 grantees in 1991 and has expanded over the past two decades to 105 grantees serving 196 communities across 39 states. Healthy Start grantees operate in communities with rates of infant mortality at least 1½ times the U.S. national average and high rates for other adverse perinatal outcomes. These communities are geographically, racially, ethnically, and linguistically diverse low-income areas. Healthy Start covers services during the perinatal period (before, during, after pregnancy) and follows the woman and infant through 2 years after the end of the pregnancy. The next round of funding represents a transformation of the program framework from nine service and systems core components to five approaches. The five approaches are as follows: (1) Improving women's health; (2) promoting quality services; (3) strengthening family resilience; (4) achieving collective impact; and (5) increasing accountability through quality improvement, performance monitoring, and evaluation.

MCHB seeks to conduct a mixed-methods evaluation to assess the effectiveness of the program on individual, organizational, and community-level outcomes. Data collection instruments will include a Women, Children, and Families Information Form; Healthy Start Grantee Web Survey; Community Action Network (CAN) Web Survey; Healthy Start Site Visit Protocol; and Healthy Start Participant Focus Group Protocol.

Need and Proposed Use of the Information: The purpose of the data collection instruments will be to obtain consistent information across all grantees about Healthy Start and its outcomes and in-depth information for 15 Healthy Start communities and 15 comparison communities to support a rigorous evaluation design. The data will be used to: (1) Provide credible and rigorous evidence of program effect on outcomes; (2) assess the relative contribution of the five program approaches to individual and community-level outcomes; (3) meet program needs for accountability, programmatic decision-making, and ongoing quality improvement; and (4) strengthen the evidence-base, and identify best and promising practices for the program to support sustainability, replication, and dissemination of the program.

Likely Respondents: Respondents include pregnant women and women of reproductive age who are served by the Healthy Start program for the Women, Children, and Families Information Form; project directors and staff for the Healthy Start Grantee Web Survey; representatives from partner organizations for the Community Action Network (CAN) Web Survey; program staff, providers, and partners for the Healthy Start Site Visit Protocol; and program participants for the Healthy Start Participant Focus Group Protocol.

Burden Statement: Burden in this context means the time expended by persons to generate, maintain, retain, disclose or provide the information requested. This includes the time needed to review instructions; to develop, acquire, install and utilize technology and systems for the purpose of collecting, validating and verifying information, processing and maintaining information, and disclosing and providing information; to train personnel and to be able to respond to a collection of information; to search data sources; to complete and review the collection of information; and to transmit or otherwise disclose the information. The total annual burden hours estimated for this Information Collection Request are summarized in the table below.

TOTAL ESTIMATED ANNUALIZED BURDEN-HOURS

Form name	Number of respondents	Number of responses per respondent	Total responses	Average burden per response (in hours)	Total burden hours
Women, Children, and Families Information Form	41,050	1	41,050	0.50	20,525
Healthy Start Grantee Web Survey	105	1	105	4.00	420
CAN Member Web Survey	600	1	600	0.75	450
Healthy Start Site Visit Protocol	15	1	15	6.00	90
Healthy Start Participant Focus Group Protocol	180	1	180	1.00	180
Total	41,950		41,950		21,665

HRSA specifically requests comments on (1) the necessity and utility of the proposed information collection for the proper performance of the agency's functions, (2) the accuracy of the estimated burden, (3) ways to enhance the quality, utility, and clarity of the information to be collected, and (4) the use of automated collection techniques or other forms of information technology to minimize the information collection burden.

Dated: January 22, 2014.

Jackie Painter,

Deputy Director, Division of Policy and Information Coordination.

[FR Doc. 2014–01564 Filed 1–27–14; 8:45 am]

BILLING CODE 4165–15–P

DEPARTMENT OF HEALTH AND HUMAN SERVICES

Health Resources and Services Administration

Agency Information Collection Activities: Submission to OMB for Review and Approval; Public Comment Request

AGENCY: Health Resources and Services Administration, HHS.

ACTION: Notice.

SUMMARY: In compliance with Section 3507(a)(1)(D) of the Paperwork

Reduction Act of 1995, the Health Resources and Services Administration (HRSA) has submitted an Information Collection Request (ICR) to the Office of Management and Budget (OMB) for review and approval. Comments submitted during the first public review of this ICR will be provided to OMB. OMB will accept further comments from the public during the review and approval period.

DATES: Comments on this ICR should be received within 30 days of this notice.

ADDRESSES: Submit your comments, including the Information Collection Request Title, to the desk officer for HRSA, either by email to *OIRA_submission@omb.eop.gov* or by fax to 202–395–5806.

FOR FURTHER INFORMATION CONTACT: To request a copy of the clearance requests submitted to OMB for review, email the HRSA Information Collection Clearance Officer at *paperwork@hrsa.gov* or call (301) 443–1984.

SUPPLEMENTARY INFORMATION:

Information Collection Request Title: Ryan White HIV/AIDS Program Core Medical Services Waiver Application Requirements.

OMB No.: 0915–0307—Revision.

Abstract: Title XXVI of the Public Health Service (PHS) Act, as amended by the Ryan White HIV/AIDS Treatment Extension Act of 2009 (Ryan White HIV/AIDS Program), Part A section 2604(c), Part B section 2612(b), and Part C section 2651(c), requires that grantees expend 75 percent of Parts A, B, and C funds on core medical services, including antiretroviral drugs for individuals with HIV/AIDS, identified and eligible under the legislation. In order for grantees under Parts A, B, and C to be exempted from the 75 percent core medical services requirement, they must request and receive a waiver from HRSA, as required in the Act.

On October 25, 2013, HRSA published revised standards for core medical services waiver requests in the **Federal Register** (78 FR 63990). These revised standards will allow grantees more flexibility to adjust resource allocation based on the current situation in their local environment. These standards ensure that grantees receiving waivers demonstrate the availability of core medical services, including antiretroviral drugs, for persons with HIV/AIDS served under Title XXVI of the PHS Act. The core medical services waiver uniform standard and waiver request process will apply to Ryan White HIV/AIDS Program Grant Awards under Parts A, B, and C of Title XXVI of the PHS Act. Core medical services waivers will be effective for a 1-year period that is consistent with the grant award period. Grantees may submit a waiver request before the annual grant application, with the application, or up to 4 months after the grant award has been made.

Need and Proposed Use of the Information: HRSA uses the documentation submitted in core medical services waiver requests to determine if the applicant/grantee meets the statutory requirements for waiver eligibility including: (1) No waiting lists for AIDS Drug Assistance Program (ADAP) services; and (2) evidence of core medical services availability within the grantee's jurisdiction, state, or service area to all individuals with HIV/AIDS identified and eligible under Title XXVI of the PHS Act. See sections 2604(c)(2), 2612(b)(2), and 2651(c)(2) of the PHS Act.

Likely Respondents: Ryan White HIV/AIDS Program Part A, B, and C grantees.

Burden Statement: Burden in this context means the time expended by persons to generate, maintain, retain, disclose or provide the information requested. This includes the time needed to review instructions; to develop, acquire, install and utilize technology and systems for the purpose of collecting, validating and verifying information, processing and maintaining information, and disclosing and providing information; to train personnel and to be able to respond to a collection of information; to search data sources; to complete and review the collection of information; and to transmit or otherwise disclose the information. The total annual burden hours estimated for this ICR are summarized in the table below.

TOTAL ESTIMATED ANNUALIZED BURDEN—HOURS

Form name	Number of respondents	Number of responses per respondent	Total responses	Average burden per response (in hours)	Total burden hours
Core Medical Services Waiver Request	20	1	20	5.5	110
Total	20	1	20	5.5	110

Dated: January 22, 2014.

Jackie Painter,

Deputy Director, Division of Policy and Information Coordination.

[FR Doc. 2014–01556 Filed 1–27–14; 8:45 am]

BILLING CODE 4165–15–P

DEPARTMENT OF HEALTH AND HUMAN SERVICES

National Institutes of Health

Submission for OMB Review; 30-Day Comment Request; Multidisciplinary Treatment Planning (MTP) Within the National Cancer Institute (NCI) Community Cancer Centers Program

SUMMARY: Under the provisions of Section 3507(a)(1)(D) of the Paperwork Reduction Act of 1995, the National Institutes of Health (NIH), has submitted to the Office of Management and Budget (OMB) a request for review and approval of the information collection listed below. This proposed information collection was previously published in the **Federal Register** on November 1, 2013, Vol. 78, P. 65675 and allowed 60-days for public comment. No public comments were received. The purpose of this notice is to allow an additional 30 days for public comment. The National Cancer Institute (NCI), National Institutes of Health, may not conduct or sponsor, and the respondent is not required to respond to, an information collection that has been extended, revised, or implemented on or after October 1, 1995, unless it displays a currently valid OMB control number.

Direct Comments to OMB: Written comments and/or suggestions regarding the item(s) contained in this notice,

especially regarding the estimated public burden and associated response time, should be directed to the: Office of Management and Budget, Office of Regulatory Affairs, *OIRA_submission@omb.eop.gov* or by fax to 202–395–6974, Attention: NIH Desk Officer.

Comment Due Date: Comments regarding this information collection are best assured of having their full effect if received within 30-days of the date of this publication.

FOR FURTHER INFORMATION CONTACT: To obtain a copy of the data collection plans and instruments or request more information on the proposed project contact: Irene Prabhu Das, Division of Cancer Control & Population Sciences, National Cancer Institute, 9609 Medical Center Drive, Room 3E–518, Bethesda, MD 20892–0704 or call non-toll-free number 240–276–6799 or Email your request, including your address to: *prabhudasi@mail.nih.gov.* Formal requests for additional plans and instruments must be requested in writing.

Proposed Collection: Multidisciplinary Treatment Planning (MTP) within the NCI Community Cancer Centers Program (NCI), 0925–NEW, National Cancer Institute (NCI), National Institutes of Health (NIH).

Need and Use of Information Collection: The aim of this data collection is to characterize how NCI Community Cancer Centers Program (NCCCP) hospitals define, structure, and implement multidisciplinary treatment planning (MTP), which initiates a coordinated approach to multidisciplinary care. The web-based, organizational survey will gather data on sites' definitions and terms for multidisciplinary treatment planning, composition of provider teams, meeting process, and patient involvement in the process. Information collected from NCCCP hospitals will add to the knowledge being generated and provide the foundation for research on multidisciplinary care in cancer. A total of 21 hospitals participating in the NCCCP through June 2014 will be requested to complete the survey.

OMB approval is requested for 1 year. There are no costs to respondents other than their time. The total estimated annualized burden hours are 22.

ESTIMATED ANNUALIZED BURDEN-HOURS

Form name	Types of respondents	Number of respondents	Number of responses per respondent	Average burden per response (in hours)	Total annual burden hours
Survey	Private Sector: Not for Profit NCI Community Cancer Center Program Hospitals.	21	1	1	21
Telephone Reminder		21	1	2/60	1

Dated: January 21, 2014.

Vivian Horovitch-Kelley,

NCI Project Clearance Liaison, National Institutes of Health.

[FR Doc. 2014–01563 Filed 1–27–14; 8:45 am]

BILLING CODE 4140–01–P

DEPARTMENT OF HEALTH AND HUMAN SERVICES

National Institutes of Health

Center For Scientific Review; Notice of Closed Meetings

Pursuant to section 10(d) of the Federal Advisory Committee Act, as amended (5 U.S.C. App.), notice is hereby given of the following meetings.

The meetings will be closed to the public in accordance with the provisions set forth in sections 552b(c)(4) and 552b(c)(6), Title 5 U.S.C., as amended. The grant applications and the discussions could disclose confidential trade secrets or commercial property such as patentable material, and personal information concerning individuals associated with the grant applications, the disclosure of which would constitute a clearly unwarranted invasion of personal privacy.

Name of Committee: Center for Scientific Review Special Emphasis Panel; Member Conflict: Research Project Grant.

Date: February 13, 2014.

Time: 10:00 a.m. to 12:00 p.m.

Agenda: To review and evaluate grant applications.

Place: National Institutes of Health, 6701 Rockledge Drive, Bethesda, MD 20892, (Telephone Conference Call).

Contact Person: Rebecca Henry, Ph.D., Scientific Review Officer, Center for Scientific Review, National Institutes of Health, 6701 Rockledge Drive, Room 3222, MSC 7808, Bethesda, MD 20892, 301–435–1717, *henryrr@mail.nih.gov.*

Name of Committee: Molecular, Cellular and Developmental Neuroscience Integrated Review Group; Neurotransporters, Receptors, and Calcium Signaling Study Section.

Date: February 20–21, 2014.

Time: 8:00 a.m. to 12:00 p.m.

Agenda: To review and evaluate grant applications.

Place: Pier 2620 Fisherman's Wharf Hotel, 2620 Jones Street, San Francisco, CA 94133.

Contact Person: Peter B. Guthrie, Ph.D., Scientific Review Officer, Center for Scientific Review, National Institutes of Health, 6701 Rockledge Drive, Room 4182, MSC 7850, Bethesda, MD 20892, (301) 435–1239, *guthriep@csr.nih.gov.*

Name of Committee: Infectious Diseases and Microbiology Integrated Review Group; Drug Discovery and Mechanisms of Antimicrobial Resistance Study Section.

Date: February 20–21, 2014.

Time: 8:00 a.m. to 6:00 p.m.

Agenda: To review and evaluate grant applications.

Place: Sir Francis Drake Hotel, 450 Powell Street at Sutter, San Francisco, CA 94102.

Contact Person: Guangyong Ji, Ph.D., Scientific Review Officer, Center for Scientific Review, National Institutes of Health, 6701 Rockledge Drive, Room 3188, MSC 7808, Bethesda, MD 20892, 301–435–1146, *jig@csr.nih.gov.*

Name of Committee: Population Sciences and Epidemiology Integrated Review Group; Epidemiology of Cancer Study Section.

Date: February 20–21, 2014.

Time: 8:30 a.m. to 5:00 p.m.

Agenda: To review and evaluate grant applications.

Place: Sir Francis Drake Hotel, 450 Powell Street at Sutter, San Francisco, CA 94102.

Contact Person: Denise Wiesch, Ph.D., Scientific Review Officer, Center for Scientific Review, National Institutes of Health, 6701 Rockledge Drive, Room 3138, MSC 7770, Bethesda, MD 20892, (301) 437–3478, *wieschd@csr.nih.gov.*

Name of Committee: Center for Scientific Review Special Emphasis Panel; Drug Discovery and Mechanisms of Antimicrobial Resistance.

Date: February 21, 2014.

Time: 8:00 a.m. to 9:00 a.m.

Agenda: To review and evaluate grant applications.

Place: Sir Francis Drake Hotel, 450 Powell Street at Sutter, San Francisco, CA 94102.

Contact Person: Alexander D. Politis, Ph.D., Scientific Review Officer, Center for Scientific Review, National Institutes of Health, 6701 Rockledge Drive, Room 3210, MSC 7808, Bethesda, MD 20892, (301) 435–1150, *politisa@csr.nih.gov.*

Name of Committee: Musculoskeletal, Oral and Skin Sciences Integrated Review Group; Skeletal Muscle and Exercise Physiology Study Section.

Date: February 24–25, 2014.

Time: 8:00 a.m. to 6:00 p.m.
Agenda: To review and evaluate grant applications.
Place: Los Angeles Marriott @ LAX, 5855 West Century Blvd, Los Angeles, CA 90245.
Contact Person: Richard Ingraham, Ph.D., Scientific Review Officer, Center for Scientific Review, National Institutes of Health, 6701 Rockledge Drive, Room 4116, MSC 7814, Bethesda, MD 20892, 301–496–8551, *ingrahamrh@mail.nih.gov.*

Name of Committee: Center for Scientific Review Special Emphasis Panel Bacterial Pathogenesis.
Date: February 24, 2014.
Time: 8:00 a.m. to 9:00 p.m.
Agenda: To review and evaluate grant applications.
Place: One Washington Circle Hotel, One Washington Circle, Washington, DC 20037.
Contact Person: Alexander D. Politis, Ph.D., Scientific Review Officer, Center for Scientific Review, National Institutes of Health, 6701 Rockledge Drive, Room 3210, MSC 7808, Bethesda, MD 20892, (301) 435–1150, *politisa@csr.nih.gov.*

Name of Committee: Digestive, Kidney and Urological Systems Integrated Review Group; Pathobiology of Kidney Disease Study Section.
Date: February 25, 2014.
Time: 8:00 a.m. to 7:00 p.m.
Agenda: To review and evaluate grant applications.
Place: Hyatt Regency Bethesda, One Bethesda Metro Center, 7400 Wisconsin Avenue, Bethesda, MD 20814.
Contact Person: Atul Sahai, Ph.D., Scientific Review Officer, Center for Scientific Review, National Institutes of Health, 6701 Rockledge Drive, Room 2188, MSC 7818, Bethesda, MD 20892, 301–435–1198, *sahaia@csr.nih.gov.*

Name of Committee: Endocrinology, Metabolism, Nutrition and Reproductive Sciences Integrated Review Group; Pregnancy and Neonatology Study Section.
Date: February 25, 2014.
Time: 8:00 a.m. to 6:00 p.m.
Agenda: To review and evaluate grant applications.
Place: Residence Inn Bethesda, 7335 Wisconsin Avenue. Bethesda, MD 20814.
Contact Person: Michael Knecht, Ph.D., Scientific Review Officer, Center for Scientific Review, National Institutes of Health, 6701 Rockledge Drive, Room 6176, MSC 7892, Bethesda, MD 20892, (301) 435–1046, *knechtm@csr.nih.gov.*

Name of Committee: Cell Biology Integrated Review Group; Molecular and Integrative Signal Transduction Study Section.
Date: February 25–26, 2014.
Time: 8:00 a.m. to 5:30 p.m.
Agenda: To review and evaluate grant applications.
Place: Hilton Garden Inn, 7301 Waverly Street, Bethesda, MD 20814.
Contact Person: Raya Mandler, Ph.D., Scientific Review Officer, Center for Scientific Review, National Institutes of Health, 6701 Rockledge Drive, Room 5134, MSC 7840, Bethesda, MD 20892, (301) 402–8228, *rayam@csr.nih.gov.*

Name of Committee: Center for Scientific Review Special Emphasis Panel; Collaborative Applications: Pathogenesis of Pediatric Obsessive-Compulsive Behaviors.
Date: February 25, 2014.
Time: 11:00 a.m. to 5:00 p.m.
Agenda: To review and evaluate grant applications.
Place: Doubletree Hotel Washington, 1515 Rhode Island Avenue NW., Washington, DC 20005.
Contact Person: Jane A. Doussard-Roosevelt, Ph.D., Scientific Review Officer, Center for Scientific Review, National Institutes of Health, 6701 Rockledge Drive, Room 3184, MSC 7848, Bethesda, MD 20892, (301) 435–4445, *doussarj@csr.nih.gov.*

Name of Committee: Center for Scientific Review Special Emphasis Panel; PAR13–345: Development of Appropriate Pediatric Formulations.
Date: February 25, 2014.
Time: 3:00 p.m. to 5:00 p.m.
Agenda: To review and evaluate grant applications.
Place: Westin Riverwalk, 420 W Market Street, San Antonio, TX 78205.
Contact Person: Yuan Luo, Ph.D., Scientific Review Officer, Center for Scientific Review, National Institutes of Health, 6701 Rockledge Drive, Room 5207, MSC 7846, Bethesda, MD 20892, 301–915–6303, *luoy2@mail.nih.gov.*

Name of Committee: Brain Disorders and Clinical Neuroscience Integrated Review Group; Clinical Neuroscience and Neurodegeneration Study Section.
Date: February 26, 2014.
Time: 7:00 a.m. to 6:00 p.m.
Agenda: To review and evaluate grant applications.
Place: Hotel Kabuki, 1625 Post Street, San Francisco, CA 94115.
Contact Person: Samuel C. Edwards, Ph.D., Chief, Brain Disorders and Clinical Neuroscience, Center for Scientific Review, National Institutes of Health, 6701 Rockledge Drive, Room 5210, MSC 7846, Bethesda, MD 20892, (301) 435–1246, *edwardss@csr.nih.gov.*

Name of Committee: Endocrinology, Metabolism, Nutrition and Reproductive Sciences Integrated Review Group; Integrative and Clinical Endocrinology and Reproduction Study Section.
Date: February 26, 2014.
Time: 8:00 a.m. to 6:00 p.m.
Agenda: To review and evaluate grant applications.
Place: Doubletree Hotel Washington, 1515 Rhode Island Ave. NW., Washington, DC 20005.
Contact Person: Dianne Hardy, Ph.D., Scientific Review Officer, Center for Scientific Review, National Institutes of Health, 6701 Rockledge Drive, Room 6175, MSC 7892, Bethesda, MD 20892, 301–435–1154, *dianne.hardy@nih.gov.*

Name of Committee: Musculoskeletal, Oral and Skin Sciences Integrated Review Group; Oral, Dental and Craniofacial Sciences Study Section.
Date: February 26–27, 2014.
Time: 8:00 a.m. to 10:00 a.m.
Agenda: To review and evaluate grant applications.
Place: Doubletree Guest Suites Santa Monica, 1707 Fourth Street, Santa Monica, CA 90401.
Contact Person: Yi-Hsin Liu, Ph.D., Scientific Review Officer, Center for Scientific Review, National Institutes of Health, 6701 Rockledge Drive, Room 4214, MSC 7814, Bethesda, MD 20892, 301–435–1781, *liuyh@csr.nih.gov.*

(Catalogue of Federal Domestic Assistance Program Nos. 93.306, Comparative Medicine; 93.333, Clinical Research; 93.306, 93.333, 93.337, 93.393–93.396, 93.837–93.844, 93.846–93.878, 93.892, 93.893, National Institutes of Health, HHS).

Dated: January 22, 2014.

David Clary,

Program Analyst, Office of Federal Advisory Committee Policy.

[FR Doc. 2014–01484 Filed 1–27–14; 8:45 am]

BILLING CODE 4140–01–P

DEPARTMENT OF HEALTH AND HUMAN SERVICES

National Institutes of Health

Center for Scientific Review; Notice of Closed Meetings

Pursuant to section 10(d) of the Federal Advisory Committee Act, as amended (5 U.S.C. App.), notice is hereby given of the following meetings.

The meetings will be closed to the public in accordance with the provisions set forth in sections 552b(c)(4) and 552b(c)(6), Title 5 U.S.C., as amended. The grant applications and the discussions could disclose confidential trade secrets or commercial property such as patentable material, and personal information concerning individuals associated with the grant applications, the disclosure of which would constitute a clearly unwarranted invasion of personal privacy.

Name of Committee: Healthcare Delivery and Methodologies Integrated Review Group; Community-Level Health Promotion Study Section.
Date: February 18, 2014.
Time: 8:00 a.m. to 5:00 p.m.
Agenda: To review and evaluate grant applications.
Place: Residence Inn at Vermont, 1199 Vermont Ave. NW., Washington, DC 20005.
Contact Person: Ping Wu, Ph.D., Scientific Review Officer, HDM IRG, Center for Scientific Review, National Institutes of Health, 6701 Rockledge Drive, Room 3166, Bethesda, MD 20892, 301–451–8428, *wup4@csr.nih.gov.*

Name of Committee: Center for Scientific Review Special Emphasis Panel; Member Conflict: Hematology.
Date: February 18–19, 2014.
Time: 10:00 a.m. to 7:00 p.m.
Agenda: To review and evaluate grant applications.

Place: National Institutes of Health, 6701 Rockledge Drive, Bethesda, MD 20892 (Virtual Meeting).

Contact Person: Ai-Ping Zou, MD, Ph.D., Scientific Review Officer, Center for Scientific Review, National Institutes of Health, 6701 Rockledge Drive, Room 4118, MSC 7814, Bethesda, MD 20892, 301–408–9497, *zouai@csr.nih.gov*.

Name of Committee: Cardiovascular and Respiratory Sciences Integrated Review Group; Respiratory Integrative Biology and Translational Research Study Section.

Date: February 20, 2014.

Time: 8:00 a.m. to 6:30 p.m.

Agenda: To review and evaluate grant applications.

Place: Renaissance Harborplace Hotel, 202 East Pratt Street, Baltimore, MD 21202.

Contact Person: Bradley Nuss, Ph.D., Scientific Review Officer, Center for Scientific Review, National Institutes of Health, 6701 Rockledge Drive, Room 4142, MSC7814, Bethesda, MD 20892, 301–451–8754, *nussb@csr.nih.gov*.

Name of Committee: Oncology 1—Basic Translational Integrated Review Group; Tumor Microenvironment Study Section.

Date: February 20–21, 2014.

Time: 8:00 a.m. to 5:00 p.m.

Agenda: To review and evaluate grant applications.

Place: Embassy Suites at the Chevy Chase Pavilion, 4300 Military Road NW., Washington, DC 20015.

Contact Person: Angela Y. Ng, Ph.D., MBA, Scientific Review Officer, Center for Scientific Review, National Institutes of Health, 6701 Rockledge Drive, Room 6200, MSC 7804, Bethesda, MD 20892, 301–435–1715, *ngan@mail.nih.gov*.

Name of Committee: Center for Scientific Review Special Emphasis Panel; Small Business: Dermatology, Rheumatology and Inflammation.

Date: February 21, 2014.

Time: 8:00 a.m. to 6:00 p.m.

Agenda: To review and evaluate grant applications.

Place: National Institutes of Health, 6701 Rockledge Drive, Bethesda, MD 20892.

Contact Person: Aruna K. Behera, Ph.D., Scientific Review Officer, Center for Scientific Review, National Institutes of Health, 6701 Rockledge Drive, Room 4211, MSC 7814, Bethesda, MD 20892, 301–435–6809, *beheraak@csr.nih.gov*.

Name of Committee: Brain Disorders and Clinical Neuroscience Integrated Review Group; Diseases and Pathophysiology of the Visual System Study Section.

Date: February 24–25, 2014.

Time: 8:00 a.m. to 5:00 p.m.

Agenda: To review and evaluate grant applications.

Place: Embassy Suites at the Chevy Chase Pavilion, 4300 Military Road NW., Washington, DC 20015.

Contact Person: Nataliya Gordiyenko, Ph.D., Scientific Review Officer, Center for Scientific Review, National Institutes of Health, 6701 Rockledge Drive, Room 5202, MSC 7846, Bethesda, MD 20892, 301–435–1265, *gordiyenkon@csr.nih.gov*.

Name of Committee: Center for Scientific Review Special Emphasis Panel; Small Business: Drug Discovery for Aging, Neuropsychiatric and Neurologic Disorders.

Date: February 24–25, 2014.

Time: 8:00 a.m. to 3:00 p.m.

Agenda: To review and evaluate grant applications.

Place: Westin Riverwalk, 420 W. Market St., San Antonio, TX 78205.

Contact Person: Yuan Luo, Ph.D., Scientific Review Officer, Center for Scientific Review, National Institutes of Health, 6701 Rockledge Drive, Room 5207, MSC 7846, Bethesda, MD 20892, 301–915–6303, *luoy2@mail.nih.gov*.

Name of Committee: Oncology 1—Basic Translational Integrated Review Group; Cancer Molecular Pathobiology Study Section.

Date: February 24–25, 2014.

Time: 8:00 a.m. to 5:00 p.m.

Agenda: To review and evaluate grant applications.

Place: The Westin St. Francis, 335 Powell Street, San Francisco, CA 94102.

Contact Person: Manzoor Zarger, Ph.D., Scientific Review Officer, Center for Scientific Review, National Institutes of Health, 6701 Rockledge Drive, Room 6208, MSC 7804, Bethesda, MD 20892, (301) 435–2477, *zargerma@csr.nih.gov*.

Name of Committee: Center for Scientific Review Special Emphasis Panel; Dissemination and Implementation Research in Health.

Date: February 24–25, 2014.

Time: 8:00 a.m. to 5:00 p.m.

Agenda: To review and evaluate grant applications.

Place: Hyatt Regency Bethesda, One Bethesda Metro Center, 7400 Wisconsin Avenue, Bethesda, MD 20814.

Contact Person: Rebecca Henry, Ph.D., Scientific Review Officer, Center for Scientific Review, National Institutes of Health, 6701 Rockledge Drive, Room 3222, MSC 7808, Bethesda, MD 20892, 301–435–1717, *henryrr@mail.nih.gov*.

Name of Committee: Biobehavioral and Behavioral Processes Integrated Review Group; Child Psychopathology and Developmental Disabilities Study Section.

Date: February 24–25, 2014.

Time: 8:00 a.m. to 5:00 p.m.

Agenda: To review and evaluate grant applications.

Place: Doubletree Hotel Washington, 1515 Rhode Island Ave. NW., Washington, DC 20005.

Contact Person: Jane A. Doussard-Roosevelt, Ph.D., Scientific Review Officer, Center for Scientific Review, National Institutes of Health, 6701 Rockledge Drive, Room 3184, MSC 7848, Bethesda, MD 20892, (301) 435–4445, *doussarj@csr.nih.gov*.

Name of Committee: Digestive, Kidney and Urological Systems Integrated Review Group; Clinical, Integrative and Molecular Gastroenterology Study Section.

Date: February 24, 2014.

Time: 8:00 a.m. to 6:00 p.m.

Agenda: To review and evaluate grant applications.

Place: Hyatt Regency Bethesda, One Bethesda Metro Center, 7400 Wisconsin Avenue, Bethesda, MD 20814.

Contact Person: Mushtaq A. Khan, Ph.D., Scientific Review Officer, Center for Scientific Review, National Institutes of Health, 6701 Rockledge Drive, Room 2176, MSC 7818, Bethesda, MD 20892, 301–435–1778, *khanm@csr.nih.gov*.

Name of Committee: Healthcare Delivery and Methodologies Integrated Review Group; Dissemination and Implementation Research in Health Study Section.

Date: February 24–25, 2014.

Time: 8:00 a.m. to 12:00 p.m.

Agenda: To review and evaluate grant applications.

Place: Hyatt Regency Bethesda, One Bethesda Metro Center, 7400 Wisconsin Avenue, Bethesda, MD 20814.

Contact Person: Martha L. Hare, Ph.D., Scientific Review Officer, Center for Scientific Review, National Institutes of Health, 6701 Rockledge Drive, Room 3154, Bethesda, MD 20892, (301) 451–8504, *harem@mail.nih.gov*.

Name of Committee: Infectious Diseases and Microbiology Integrated Review Group; Bacterial Pathogenesis Study Section.

Date: February 24, 2014.

Time: 8:00 a.m. to 6:00 p.m.

Agenda: To review and evaluate grant applications.

Place: One Washington Circle Hotel, One Washington Circle, Washington, DC 20037.

Contact Person: Marci Scidmore, Ph.D., Scientific Review Officer, Center for Scientific Review, National Institutes of Health, 6701 Rockledge Drive, Room 3192, MSC 7808, Bethesda, MD 20892, 301–435–1149, *marci.scidmore@nih.gov*.

Name of Committee: Center for Scientific Review Special Emphasis Panel; Fellowships: Biophysical, Physiological, Pharmacological and Bioengineering Neuroscience.

Date: February 24–25, 2014.

Time: 8:00 a.m. to 5:00 p.m.

Agenda: To review and evaluate grant applications.

Place: Westin Riverwalk, 420 W. Market Street, San Antonio, TX 78205.

Contact Person: Paek-Gyu Lee, Ph.D., Scientific Review Officer, Center for Scientific Review, National Institutes of Health, 6701 Rockledge Drive, Room 5196, MSC 7812, Bethesda, MD 20892, (301) 613–2064, *leepg@csr.nih.gov*.

Name of Committee: Center for Scientific Review Special Emphasis Panel; Small Business: Clinical Neurophysiology, Devices, Neuroprosthetics, and Biosensors.

Date: February 24–25, 2014.

Time: 8:00 a.m. to 5:00 p.m.

Agenda: To review and evaluate grant applications.

Place: Westin Riverwalk, 420 W. Market St., San Antonio, TX 78205.

Contact Person: Cristina Backman, Scientific Review Officer, Center for Scientific Review, National Institutes of Health, 6701 Rockledge Drive, Room 5211 MSC7846, Bethesda, MD 20892, *cbackman@mail.nih.gov*.

Name of Committee: Infectious Diseases and Microbiology Integrated Review Group; Virology—B Study Section.

Date: February 24–25, 2014.

Time: 8:30 a.m. to 5:00 p.m.

Agenda: To review and evaluate grant applications.

Place: Courtyard by Marriott, 5520 Wisconsin Avenue, Chevy Chase, MD 20815.

Contact Person: John C. Pugh, Ph.D., Scientific Review Officer, Center for Scientific Review, National Institutes of Health, 6701 Rockledge Drive, Room 1206, MSC 7808, Bethesda, MD 20892, (301) 435–2398, *pughjohn@csr.nih.gov.*

Name of Committee: Digestive, Kidney and Urological Systems Integrated Review Group; Urologic and Genitourinary Physiology and Pathology.

Date: February 24, 2014.

Time: 9:30 a.m. to 6:00 p.m.

Agenda: To review and evaluate grant applications.

Place: National Institutes of Health, 6701 Rockledge Drive, Bethesda, MD 20892.

Contact Person: Ryan G. Morris, Ph.D., Scientific Review Officer, Center for Scientific Review, National Institutes of Health, 6701 Rockledge Drive, Room 4205, MSC 7814, Bethesda, MD 20892, 301–435–1501, *morrisr@csr.nih.gov.*

(Catalogue of Federal Domestic Assistance Program Nos. 93.306, Comparative Medicine; 93.333, Clinical Research, 93.306, 93.333, 93.337, 93.393–93.396, 93.837–93.844, 93.846–93.878, 93.892, 93.893, National Institutes of Health, HHS)

Dated: January 22, 2014.

David Clary,

Program Analyst, Office of Federal Advisory Committee Policy.

[FR Doc. 2014–01485 Filed 1–27–14; 8:45 am]

BILLING CODE 4140–01–P

DEPARTMENT OF HOMELAND SECURITY

[Docket No. DHS–2013–0082]

President's National Security Telecommunications Advisory Committee

AGENCY: National Protection and Programs Directorate, Department of Homeland Security (DHS).

ACTION: Committee Management notice of an open Federal Advisory Committee meeting.

SUMMARY: The President's National Security Telecommunications Advisory Committee (NSTAC) will meet via teleconference on Wednesday, February 19, 2014. The meeting will be open to the public.

DATES: The NSTAC will meet on Wednesday, February 19, 2014, from 2 p.m. to 3 p.m. Please note that the meeting may close early if the committee has completed its business.

ADDRESSES: The meeting will be held via conference call. For access to the conference call bridge, contact Ms. Suzanne Daage by email at *sue.daage@hq.dhs.gov* or phone at (703)235–5461 by 5 p.m. on Friday, February 14, 2014. To facilitate public participation, we are inviting public comment on the issues to be considered by the committee, as listed in the **SUPPLEMENTARY INFORMATION** section below. For information on services for individuals with disabilities or to request special assistance to access the meeting, contact Ms. Suzanne Daage by email at *sue.daage@hq.dhs.gov* or phone at (703) 235–5461. Documents associated with the topics the committee will discuss during the conference call will be available at *www.dhs.gov/nstac* for review by Tuesday, February 11, 2014. Written comments must be received by the NSTAC Alternate Designated Federal Officer no later than Friday, February 14, 2014, and may be submitted by any one of the following methods:

- *Federal eRulemaking Portal: http://www.regulations.gov.* Follow the instructions for submitting written comments.
- *Email: NSTAC@hq.dhs.gov.* Include the docket number in the subject line of the email message.
- *Fax:* 703–235–5961.
- *Mail:* Alternate Designated Federal Officer, Stakeholder Engagement and Critical Infrastructure Resilience Division, National Protection and Programs Directorate, Department of Homeland Security, 245 Murray Lane, Mail Stop 3016B, Arlington, VA 20598–0615.

Instructions: All submissions received must include the words ''Department of Homeland Security'' and the docket number for this action. Comments received will be posted without alteration at *www.regulations.gov,* including any personal information provided.

Docket: For access to the docket, including all documents and comments received by the NSTAC, go to *www.regulations.gov* and enter the docket number, DHS–2013–0082, for this notice.

A public comment period will be held during the conference call on Wednesday, February 19, 2014, from 2:25 p.m. to 2:40 p.m. Speakers who wish to participate in the public comment period must register in advance no later than Friday, February 14, 2014, at 5:00 p.m. by emailing Suzanne Daage at *sue.daage@hq.dhs.gov.* Speakers are requested to limit their comments to three minutes and will speak in order of registration as time permits. Please note that the public comment period may end before the time indicated, following the last request for comments.

FOR FURTHER INFORMATION CONTACT: Mr. Mike Echols, NSTAC Alternate Designated Federal Officer, Department of Homeland Security, telephone (703) 235–5469.

SUPPLEMENTARY INFORMATION: Notice of this meeting is given under the *Federal Advisory Committee Act* (FACA), 5 U.S.C. App. (Pub. L. 92–463). The NSTAC advises the President on matters related to national security and emergency preparedness (NS/EP) telecommunications policy.

Agenda: The NSTAC members will deliberate and vote on the draft NSTAC *Industrial Internet Scoping Report,* and receive an update on the NSTAC Information Technology Mobilization Scoping Subcommittee. The *NSTAC Industrial Internet Scoping Report* and the Information Technology Mobilization Scoping Subcommittee status update will be available at *www.dhs.gov/nstac* by Tuesday, February 11, 2014.

Dated: January 17, 2014.

Helen Jackson,

Designated Federal Officer for the NSTAC.

[FR Doc. 2014–01525 Filed 1–27–14; 8:45 am]

BILLING CODE 9110–9P–P

DEPARTMENT OF HOMELAND SECURITY

Coast Guard

[Docket No. USCG–2013–1089]

Merchant Marine Personnel Advisory Committee

AGENCY: Coast Guard, DHS.

ACTION: Notice of federal advisory committee meeting.

SUMMARY: The Merchant Marine Personnel Advisory Committee (MERPAC) will meet on March 11, 2014 and March 12, 2014 in Dania Beach, FL, to discuss various issues related to the training and fitness of merchant marine personnel. This meeting will be open to the public.

DATES: MERPAC working groups will meet on March 11, 2014, from 8 a.m. until 4 p.m., and the full committee will meet on March 12, 2014, from 8 a.m. until 4 p.m. Please note that this meeting may adjourn early if all business is finished.

ADDRESSES: The Committee will meet in Room 217 of the STAR Center, 2 West Dixie Highway, Dania Beach, FL 33004. Please be advised all attendees will be required to provide identification in the form of a government-issued picture identification card in order to gain admittance to the facility. For further information on the location of the STAR Center, please contact Mr. Graeme

Holman at (954) 921–7254 Ext. 7172 as soon as possible.

For information on facilities or services for individuals with disabilities or to request special assistance, please contact Mr. Mark Gould, Alternate Designated Federal Officer (ADFO), telephone 202–372–1409, or at *mark.c.gould@uscg.mil.*

To facilitate public participation, we are inviting public comment on the issues to be considered by the committee and working groups as listed in the ''Agenda'' section below. Written comments for distribution to committee members and inclusion on MERPAC Web site must be submitted on or before February, 25, 2014. Written comments must be identified by Docket No. USCG–2013–1089 and submitted by one of the following methods:

- *Federal eRulemaking Portal: http://www.regulations.gov.* Follow the instructions for submitting comments (preferred method to avoid delays in processing).
- *Fax:* 202–493–2251.
- *Mail:* Docket Management Facility (M–30), U.S. Department of Transportation, West Building Ground Floor, Room W12–140, 1200 New Jersey Avenue SE., Washington, DC 20590–0001.
- *Hand delivery:* Same as mail address above, between 9 a.m. and 5 p.m., Monday through Friday, except Federal holidays. The telephone number is 202–366–9329.

Instructions: All submissions received must include the words ''Department of Homeland Security'' and the docket number for this action. Comments received will be posted without alteration at *http://www.regulations.gov*, including any personal information provided. You may review a Privacy Act notice regarding our public dockets in the January 17, 2008, issue of the **Federal Register** (73 FR 3316).

Docket: For access to the docket to read documents or comments related to this notice, go to *http://www.regulations.gov*, enter the docket number in the ''Search'' field and follow the instructions on the Web site.

Public oral comment periods will be held each day. Speakers are requested to limit their comments to 3 minutes. Please note that the public oral comment periods may end before the prescribed ending time following the last call for comments. Contact Mr. Mark Gould as indicated below to register as a speaker.

This notice may be viewed in our online docket, USCG–2013–1089, at *http://www.regulations.gov*.

FOR FURTHER INFORMATION CONTACT: Mr. Mark Gould, Alternate Designated Federal Officer (ADFO), telephone 202–372–1409, or at *mark.c.gould@uscg.mil.* If you have any questions on viewing or submitting material to the docket, call Barbara Hairston, Program Manager, Docket Operations, telephone 202–366–9826.

SUPPLEMENTARY INFORMATION: Notice of this meeting is given under the *Federal Advisory Committee Act (FACA),* Title 5, United States Code, Appendix (Pub. L. 92–463).

MERPAC is an advisory committee established under the Secretary's authority in section 871 of the Homeland Security Act of 2002, Title 6, United States Code, section 451, and chartered under the provisions of the FACA. The Committee acts solely in an advisory capacity to the Secretary of the Department of Homeland Security (DHS) through the Commandant of the Coast Guard and the Director of Commercial Regulations and Standards on matters relating to personnel in the U.S. merchant marine, including but not limited to training, qualifications, certification, documentation, and fitness standards. The Committee will advise, consult with, and make recommendations reflecting its independent judgment to the Secretary.

A copy of all meeting documentation is available at *https://homeport.uscg.mil/merpac* and then use the announcements key. Alternatively, you may contact Mr. Mark Gould as noted in the **FOR FURTHER INFORMATION CONTACT** section above.

Agenda

Day 1

The agenda for the March 11, 2014, meeting is as follows:

(1) The full committee will meet briefly to discuss the working groups' business/task statements, which are listed under paragraph 2 (a)–(g) below.

(2) Working groups addressing the following task statements, available for viewing at *http://homeport.uscg.mil/merpac,* will meet to deliberate:

(a) Task Statement 30, Utilizing Military Education, Training and Assessment for the International Convention on Standards of Training, Certification and Watchkeeping for Seafarers (STCW) and U.S. Coast Guard Certifications;

(b) Task Statement 58, Communication between External Stakeholders and the Mariner Credentialing Program, as it Relates to the National Maritime Center;

(c) Task Statement 78, Consideration of the International Labour Organization's Maritime Labour Convention, 2006;

(d) Task Statement 80, Crew Training Requirements Onboard Natural Gas-Fueled Vessels Other Than Liquefied Natural Gas Carriers;

(e) Task Statement 81, Development of Competency Requirements for Vessel Personnel Working Within the Polar Regions;

(f) Task Statement 83, Development of Competency Requirements to meet STCW Chief Engineer III/2 for Personnel Working on Small Vessels with High Horsepower; and

(g) Task Statement 85, Correction of Merchant Mariner Credentials issued with Clear Errors.

(3) Public comment period.

(4) Reports of working groups. At the end of the day, the working groups will report to the full committee on what was accomplished in their meetings. The full committee will not take action on these reports on this date. Any official action taken as a result of this working group meeting will be taken on day 2 of the meeting.

(5) Adjournment of meeting.

Day 2

The agenda for the March 12, 2014, committee meeting is as follows:

(1) Introduction;

(2) Remarks from Coast Guard Leadership;

(3) Swearing in of new members.

(4) Roll call of committee members and determination of a quorum;

(4) Designated Federal Officer (DFO) announcements;

(5) Reports from the following working groups;

(a) Task Statement 30, Utilizing Military Education, Training and Assessment for STCW and U.S. Coast Guard Certifications;

(b) Task Statement 58, Communication between External Stakeholders and the Mariner Credentialing Program, as it Relates to the National Maritime Center;

(c) Task Statement 78, Consideration of the International Labour Organization's Maritime Labour Convention, 2006;

(d) Task Statement 80, Crew Training Requirements Onboard Natural Gas-Fueled Vessels Other Than Liquefied Natural Gas Carriers;

(e) Task Statement 81, Development of Competency Requirements for Vessel Personnel Working Within the Polar Regions;

(f) Task Statement 83, Development of Competency Requirements to meet STCW Chief Engineer III/2 for Personnel Working on Small Vessels with High Horsepower; and

(g) Task Statement 85, Correction of Merchant Mariner Credentials issued with Clear Errors.

(6) Other items for discussion:

(a) Report on National Maritime Center (NMC) activities from NMC Commanding Officer, such as the net processing time it takes for a mariner to receive his or her credential after application submittal;

(b) Report on Mariner Credentialing Program Policy Division activities, such as its current initiatives and projects;

(c) Report on International Maritime Organization (IMO)/International Labour Organization (ILO) issues related to the merchant marine industry;

(d) Report on the implementation of the 2010 amendments to the STCW Convention; and

(e) Briefings about on-going Coast Guard projects related to personnel in the U.S. Merchant Marine, such as proposed Task Statements concerning:

Implementation of the Amendments to the International Convention on Standards of Training, Certification and Watchkeeping for Seafarers, 1978, and Changes to National Endorsements; and Training of Personnel and Manning on Mobile Offshore Units (MOUs) and Offshore Supply Vessels (OSVs) on the United States' Outer Continental Shelf (OCS); and

(7) Public comment period/ presentations.

(8) Discussion of working group recommendations. The committee will review the information presented on each issue, deliberate on any recommendations presented by the working groups and approve/formulate recommendations for the Department's consideration. Official action on these recommendations may be taken on this date.

(9) Closing remarks/plans for next meeting.

(10) Adjournment of meeting.

A copy of all meeting documentation is available at *http://homeport.uscg.mil/merpac.* Alternatively, you may contact Mr. Mark Gould as noted in the **FOR FURTHER INFORMATION CONTACT** section above.

Dated: January 15, 2014.

J.G. Lantz,

Director of Commercial Regulations and Standards.

[FR Doc. 2014–01599 Filed 1–27–14; 8:45 am]

BILLING CODE 9110–04–P

DEPARTMENT OF HOMELAND SECURITY

U.S. Customs and Border Protection

Agency Information Collection Activities: Importer ID Input Record

AGENCY: U.S. Customs and Border Protection, Department of Homeland Security.

ACTION: 30-Day notice and request for comments; Extension of an existing collection of information.

SUMMARY: U.S. Customs and Border Protection (CBP) of the Department of Homeland Security will be submitting the following information collection request to the Office of Management and Budget (OMB) for review and approval in accordance with the Paperwork Reduction Act: Importer ID Input Record (CBP Form 5106). This is a proposed extension of an information collection that was previously approved. CBP is proposing that this information collection be extended with no change to the burden hours. This document is published to obtain comments from the public and affected agencies. This proposed information collection was previously published in the **Federal Register** (78 FR 67383) on November 12, 2013, allowing for a 60-day comment period. This notice allows for an additional 30 days for public comments. This process is conducted in accordance with 5 CFR 1320.10.

DATES: Written comments should be received on or before February 27, 2014 to be assured of consideration.

ADDRESSES: Interested persons are invited to submit written comments on this proposed information collection to the Office of Information and Regulatory Affairs, Office of Management and Budget. Comments should be addressed to the OMB Desk Officer for Customs and Border Protection, Department of Homeland Security, and sent via electronic mail to *oira_submission@omb.eop.gov* or faxed to (202) 395–5806.

FOR FURTHER INFORMATION CONTACT: Requests for additional information should be directed to Tracey Denning, U.S. Customs and Border Protection, Regulations and Rulings, Office of International Trade, 90 K Street NE., 10th Floor, Washington, DC 20229–1177, at 202–325–0265.

SUPPLEMENTARY INFORMATION: CBP invites the general public and other Federal agencies to comment on proposed and/or continuing information collections pursuant to the Paperwork Reduction Act of 1995 (Pub. L. 104–13; 44 U.S.C. 3507). The comments should address: (a) Whether the collection of information is necessary for the proper performance of the functions of the agency, including whether the information shall have practical utility; (b) the accuracy of the agency's estimates of the burden of the collection of information; (c) ways to enhance the quality, utility, and clarity of the information to be collected; (d) ways to minimize the burden including the use of automated collection techniques or the use of other forms of information technology; and (e) the annual costs burden to respondents or record keepers from the collection of information (a total capital/startup costs and operations and maintenance costs). The comments that are submitted will be summarized and included in the CBP request for Office of Management and Budget (OMB) approval. All comments will become a matter of public record. In this document CBP is soliciting comments concerning the following information collection:

Title: Importer ID Input Record.

OMB Number: 1651–0064.

Form Number: CBP Form 5106.

Abstract: The collection of the information on the Importer ID Input Record (CBP Form 5106) is the basis for identifying entities who wish to import merchandise into the United States, act as consignee on an importation when not the importer of record, or otherwise do business with CBP that would involve the payment of duties, taxes, fees or other monies or the refund. Each person, business firm, Government agency, or other organization that intends to file an import entry must file CBP Form 5106 with the first formal entry or request for services that will result in the issuance of a bill or a refund check upon adjustment of a cash collection. This form must also be filed by or on behalf of the ultimate consignee at the first importation in which the party acting as ultimate consignee is so named.

CBP Form 5106 is authorized by 19 U.S.C 1484 and provided for by 19 CFR 24.5. This form is accessible at: *http://forms.cbp.gov/pdf/CBP_Form_5106.pdf.*

Action: CBP proposes to extend the expiration date of this information collection with no change to the burden hours or to the information collected on CBP Form 5106.

Type of Review: Extension (without change).

Affected Public: Businesses and Individuals.

Estimated Number of Respondents Annually: 300,000.

Estimated Time per Respondent: 15 minutes.

Estimated Total Annual Burden Hours: 75,000.

Dated: January 23, 2014.

Tracey Denning,

Agency Clearance Officer, U.S. Customs and Border Protection.

[FR Doc. 2014–01536 Filed 1–27–14; 8:45 am]

BILLING CODE 9111–14–P

DEPARTMENT OF HOMELAND SECURITY

U.S. Customs and Border Protection

Agency Information Collection Activities: Commercial Invoice

AGENCY: U.S. Customs and Border Protection, Department of Homeland Security.

ACTION: 30-Day notice and request for comments; Extension of an existing collection of information: 1651–0090.

SUMMARY: U.S. Customs and Border Protection (CBP) of the Department of Homeland Security will be submitting the following information collection request to the Office of Management and Budget (OMB) for review and approval in accordance with the Paperwork Reduction Act: Commercial Invoice. This is a proposed extension of an information collection that was previously approved. CBP is proposing that this information collection be extended with no change to the burden hours. This document is published to obtain comments from the public and affected agencies. This proposed information collection was previously published in the **Federal Register** (78 FR 70569) on November 26, 2013, allowing for a 60-day comment period. This notice allows for an additional 30 days for public comments. This process is conducted in accordance with 5 CFR 1320.10.

DATES: Written comments should be received on or before February 27, 2014 to be assured of consideration.

ADDRESSES: Interested persons are invited to submit written comments on this proposed information collection to the Office of Information and Regulatory Affairs, Office of Management and Budget. Comments should be addressed to the OMB Desk Officer for Customs and Border Protection, Department of Homeland Security, and sent via electronic mail to *oira_submission@omb.eop.gov.* or faxed to (202) 395–5806.

FOR FURTHER INFORMATION CONTACT: Requests for additional information should be directed to Tracey Denning, U.S. Customs and Border Protection, Regulations and Rulings, Office of International Trade, 90 K Street NE., 10th Floor, Washington, DC 20229–1177, at 202–325–0265.

SUPPLEMENTARY INFORMATION: CBP invites the general public and other Federal agencies to comment on proposed and/or continuing information collections pursuant to the Paperwork Reduction Act of 1995 (Pub. L. 104–13; 44 U.S.C. 3507). The comments should address: (a) Whether the collection of information is necessary for the proper performance of the functions of the agency, including whether the information shall have practical utility; (b) the accuracy of the agency's estimates of the burden of the collection of information; (c) ways to enhance the quality, utility, and clarity of the information to be collected; (d) ways to minimize the burden including the use of automated collection techniques or the use of other forms of information technology; and (e) the annual costs burden to respondents or record keepers from the collection of information (a total capital/startup costs and operations and maintenance costs). The comments that are submitted will be summarized and included in the CBP request for Office of Management and Budget (OMB) approval. All comments will become a matter of public record. In this document CBP is soliciting comments concerning the following information collection:

Title: Commercial Invoice.

OMB Number: 1651–0090.

Form Number: None.

Abstract: The collection of the commercial invoice is necessary for conducting adequate examination of merchandise and determination of the duties due on imported merchandise as required by 19 CFR 141.81, 141.82, 141.83, 141.84, 141.85, 141.86, 141.88, 141.89, 141.90 and by 19 U.S.C. 1481 and 1484. The commercial invoice is provided to CBP by the importer. The information is used to ascertain the proper tariff classification and valuation of imported merchandise, as required by the Tariff Act of 1930. To facilitate trade, CBP did not develop a specific form for this information collection. Importers are allowed to use their existing invoices to comply with these regulations.

Current Actions: This submission is being made to extend the expiration date with no change to the burden hours.

Type of Review: Extension (without change).

Affected Public: Businesses.

Estimated Number of Respondents: 38,500.

Estimated Number of Annual Responses per Respondent: 1208.

Estimated Number of Total Annual Responses: 46,500,000.

Estimated Time per Response: 1 minute.

Estimated Total Annual Burden Hours: 744,000.

Dated: January 23, 2014.

Tracey Denning,

Agency Clearance Officer, U.S. Customs and Border Protection.

[FR Doc. 2014–01535 Filed 1–27–14; 8:45 am]

BILLING CODE 9111–14–P

DEPARTMENT OF HOUSING AND URBAN DEVELOPMENT

[Docket No. FR–5768–N–01]

Request for Comment on Proposed Changes to the Survey of New Manufactured (Mobile) Home Placements Data Collection Methodology

AGENCY: Office of the Assistant Secretary for Policy Development and Research, HUD.

ACTION: Notice.

SUMMARY: This notice announces that HUD is soliciting public comments regarding changes to the data collection methodology for Survey of New Manufactured (Mobile) Home Placements, commonly referred to as the Manufactured Homes Survey. The goal of the data collection methodology changes is to reduce survey costs while continuing to produce statutorily-mandated estimates of prices of manufactured housing for the nation and for states, as well as important characteristics of new units produced and sold.

DATES: *Comments Due Date:* April 28, 2014.

ADDRESSES: Interested persons are invited to submit comments regarding this proposal. Comments must refer to the above docket number and title. There are two methods for submitting public comments.

1. Submission of Comments by Mail. Comments may be submitted by mail to Shawn Bucholtz, Director, Housing and Demographic Analysis Division, Office of Policy Development and Research, Department of Housing and Urban Development, 451 7th St. SW., Room 8222, Washington, DC 20410. Due to security measures at all federal agencies, however, submission of comments by mail often results in delayed delivery. To ensure timely receipt of comments, HUD recommends that comments submitted by mail be submitted at least two weeks in advance of the public comment deadline.

2. Electronic Submission of Comments. Interested persons may submit comments electronically through the Federal eRulemaking Portal at *www.regulations.gov.* HUD strongly encourages commenters to submit comments electronically. Electronic submission of comments allows the commenter maximum time to prepare and submit a comment, ensures timely receipt by HUD, and enables HUD to make them immediately available to the public. Comments submitted electronically through the *www.regulations.gov* Web site can be viewed by other commenters and interested members of the public. Commenters should follow the instructions provided on that site to submit comments electronically.

Note: To receive consideration as public comments, comments must be submitted through one of the two methods specified above. Again, all submissions must refer to the docket number and title of the rule.

No Facsimile Comments. Facsimile (FAX) comments are not acceptable.

Public Inspection of Public Comments. All properly submitted comments and communications submitted to HUD will be available for public inspection and copying between 8 a.m. and 5 p.m. weekdays at the above address. Due to security measures at the HUD Headquarters building, an advance appointment to review the public comments must be scheduled by calling the Regulations Division at 202–708–3055 (this is not a toll-free number). Individuals with speech or hearing impairments may access this number through TTY by calling the Federal Relay Service at 800–877–8339. Copies of all comments submitted are available for inspection and downloading at *http://www.regulations.gov.*

FOR FURTHER INFORMATION CONTACT: Shawn Bucholtz, Director, Housing and Demographic Analysis Division, Office of Policy Development and Research, 451 7th Street SW., Room 8222, Washington, DC 20410–0500, telephone number 202–402–5538 (this is not a toll-free number). Hearing or speech-impaired individuals may access this number via TTY by calling the toll-free Federal Relay Service at telephone number 1–800–8–77–8339.

SUPPLEMENTARY INFORMATION:

A. Background

As required by statute,[a] HUD annually sponsors the Survey of New Manufactured (Mobile) Home Placements, commonly referred to as the Manufactured Homes Survey (MHS). The MHS collects data on the placement[b], price, and characteristics of new manufactured homes. Consistent with the statute, the MHS is used to produce annual estimates of price for the nation, Census regions, and for each state. Although not required by statute, the MHS is also used to produce monthly estimates of price, placements, and dealer inventory for the nation, and annual estimates of selected characteristics of new manufactured units. Each year, HUD enters into an Interagency Agreement with the Census Bureau to conduct the survey and publish survey results. HUD annually spends approximately $820,000 for the MHS.

Manufactured housing units, as a share of all new housing units, have been declining over the past decade. In 2011 and 2012, manufactured housing units represented about 8 percent of all housing units constructed. There were 55,000 manufactured housing units constructed in 2012.

B. Current Data Collection Methodology

Under its regulatory authority to set and certify compliance with construction standards for manufactured housing, each month HUD provides Census with a list of all manufactured housing units shipped to dealers (these are used to make national and state-level shipment counts). The Census Bureau draws a sample of the units shipped to dealers and sends the MHS form to the dealer to which each sampled unit was shipped. The dealer fills out the MHS form for each unit that has been placed at its final destination. If a unit has not yet been placed (meaning it is still part of a dealer's inventory), the Census Bureau contacts the dealer each month to inquire about the status until the unit is placed at its final destination and the dealer returns the MHS form. These monthly follow-up calls to dealers are necessary in order to produce placement and dealer inventory estimates. The Census Bureau estimates that the annual cost to produce estimates of placements and dealer inventory is $467,000, or 58 percent of the entire cost of the survey.

C. Reconsidering the Usefulness of Placement and Dealer Inventory Estimates

The production of a manufactured home begins when an individual places an order for a new home with a dealer. The dealer then relays the order to the manufacturer. When the manufacturing process is complete, the home is shipped to the dealer, where it remains until the final destination site on which it is to be placed is ready to receive the unit.

Considering today's industry practices, placement estimates do not add additional useful information for estimating demand beyond what can be gleaned from shipment counts. Unlike twenty years ago, manufactured homes today are typically produced on an ''on demand'' or ''as ordered'' basis. The result of the industry shift towards ''as ordered'' is that the number of shipments and number of placements are essentially (and statistically) measuring the same thing. The correlation coefficient between annual national-level shipment counts and annual national-level placement estimates between 2006 and 2012 was 0.99. Furthermore, about 90 percent of all new manufactured homes are eventually placed in the same state to which they were shipped.

The dealer inventory estimate is not measuring a supply of housing units waiting to be sold. Rather, it is estimating the number of manufactured housing units already sold and waiting to be transported to their final destination. That is, the ''dealer inventory'' of manufactured homes as currently measured by MHS is more akin to counting the goods sitting on the front porches of customers of an internet retailer rather than counting the goods sitting in the company's warehouse.

D. Proposed Changes to the Data Collection Methodology

HUD is considering changing the MHS data collection methodology to eliminate follow-up calls with dealers, beginning in fiscal year 2015. The impact of this change is that the MHS would no longer be used to produce estimates of final placements or dealer inventory. Consistent with the MHS statute, the MHS would continue to be used to produce annual estimates of price for the nation, Census Regions, and states. The MHS would also continue to be used to produce monthly estimates of price for the nation and annual estimates of selected characteristics of manufactured housing units. This proposed change to the MHS data collection methodology is estimated to save up to $467,000 per year.

D. Request for Comments

HUD is seeking information from the public regarding these proposed changes to the MHS for fiscal year 2015 and beyond. Governmental policy makers, academic researchers, MHS

[a] The statutory mandate for HUD to conduct the MHS is found at 12 U.S.C. 1703 Notes Section 308(e) of Public Law 96–399.

[b] A manufactured home is considered placed when it put on a site for residential use.

data users, and other interested parties are encouraged to participate by submitting comments. Official address, contact, and due date for submitting comments are stated above.

Dated: January 17, 2014.

Jean Lin Pao,

General Deputy Assistant Secretary for Policy Development and Research.

[FR Doc. 2014–01594 Filed 1–27–14; 8:45 am]

BILLING CODE 4210–67–P

DEPARTMENT OF THE INTERIOR

Fish and Wildlife Service

[FWS–HQ–FHC–2014–N016; FXFR131109WFHS0–FF09F10000–134]

Information Collection Request Sent to the Office of Management and Budget (OMB) for Approval; Injurious Wildlife; Importation Certification for Live Fish and Fish Eggs

AGENCY: Fish and Wildlife Service, Interior.

ACTION: Notice; request for comments.

SUMMARY: We (U.S. Fish and Wildlife Service) have sent an Information Collection Request (ICR) to OMB for review and approval. We summarize the ICR below and describe the nature of the collection and the estimated burden and cost. This information collection is scheduled to expire on February 28, 2014. We may not conduct or sponsor and a person is not required to respond to a collection of information unless it displays a currently valid OMB control number. However, under OMB regulations, we may continue to conduct or sponsor this information collection while it is pending at OMB.

DATES: You must submit comments on or before February 27, 2014.

ADDRESSES: Send your comments and suggestions on this information collection to the Desk Officer for the Department of the Interior at OMB–OIRA at (202) 395–5806 (fax) or *OIRA_Submission@omb.eop.gov* (email). Please provide a copy of your comments to the Service Information Collection Clearance Officer, U.S. Fish and Wildlife Service, MS 2042–PDM, 4401 North Fairfax Drive, Arlington, VA 22203 (mail), or *hope_grey@fws.gov* (email). Please include ''1018–0078'' in the subject line of your comments.

FOR FURTHER INFORMATION CONTACT: To request additional information about this ICR, contact Hope Grey at *hope_grey@fws.gov* (email) or 703–358–2482 (telephone). You may review the ICR online at *http://www.reginfo.gov.* Follow the instructions to review Department of the Interior collections under review by OMB.

SUPPLEMENTARY INFORMATION:

OMB Control Number: 1018–0078.

Title: Injurious Wildlife; Importation Certification for Live Fish and Fish Eggs, 50 CFR 16.13.

Service Form Number(s): 3–2273, 3–2274, and 3–2275.

Type of Request: Extension of a currently approved collection.

Description of Respondents: Aquatic animal health professionals seeking to be certified title 50 inspectors; certified title 50 inspectors who have performed health certifications on live salmonids; and any entity wishing to import live salmonids or their reproductive products into the United States.

Respondent's Obligation: Required to obtain or retain a benefit.

Frequency of Collection: On occasion.

Activity	Number of respondents	Number of responses	Completion time per response	Total annual burden hours
FWS Form 3–2273	16	16	1 hour	16
FWS Form 3–2274	25	50	30 minutes	25
FWS Form 3–2275	25	50	15 minutes	13
Total	66	116		54

Abstract: The Lacey Act (18 U.S.C. 42) (Act) prohibits the possession or importation of any animal deemed to be and prescribed by regulation to be injurious to:

- Human beings;
- The interests of agriculture, horticulture, and forestry; or
- Wildlife or the wildlife resources of the United States.

The Department of the Interior is charged with enforcement of this Act. The Act and regulations at 50 CFR 16 allow for the importation of animals classified as injurious if specific criteria are met. To effectively carry out responsibilities and protect the aquatic resources of the United States, we must gather information on the animals being imported with regard to their source, destination, and health status. It is also imperative that we ensure the qualifications of those individuals who provide the fish health data and sign the health certificate upon which we base our decision to allow importation.

We use three forms to collect this information:

(1) FWS Form 3–2273 (Title 50 Certifying Official Form). New applicants and those seeking recertification as a title 50 certifying official provide information so that we can assess their qualifications.

(2) FWS Form 3–2274 (U.S. Title 50 Certification Form). Certifying officials use this form or their own health certificate to affirm the health status of the fish or their reproductive products to be imported.

(3) FWS Form 3–2275 (Title 50 Importation Request Form). We use the information on this form to ensure the safety of the shipment and to track and control importations.

Comments: On November 6, 2013, we published in the **Federal Register** (78 FR 66760) a notice of our intent to request that OMB renew approval for this information collection. In that notice, we solicited comments for 60 days, ending on January 6, 2014. We did not receive any comments.

We again invite comments concerning this information collection on:

- Whether or not the collection of information is necessary, including whether or not the information will have practical utility;
- The accuracy of our estimate of the burden for this collection of information;
- Ways to enhance the quality, utility, and clarity of the information to be collected; and
- Ways to minimize the burden of the collection of information on respondents.

Comments that you submit in response to this notice are a matter of public record. Before including your address, phone number, email address, or other personal identifying information in your comment, you should be aware that your entire comment, including your personal identifying information, may be made publicly available at any time. While you can ask OMB in your comment to withhold your personal identifying

information from public review, we cannot guarantee that it will be done.

Dated: January 22, 2014.

Tina A. Campbell,

Chief, Division of Policy and Directives Management, U.S. Fish and Wildlife Service.

[FR Doc. 2014–01478 Filed 1–27–14; 8:45 am]

BILLING CODE 4310–55–P

DEPARTMENT OF THE INTERIOR

Fish and Wildlife Service

[FWS–R7–MM–2014–N014; FF07CAMM00 FXFR133707PB000]

Information Collection Request Sent to the Office of Management and Budget (OMB) for Approval; Incidental Take of Marine Mammals During Specified Oil and Gas Industry Activities

AGENCY: Fish and Wildlife Service, Interior.

ACTION: Notice; request for comments.

SUMMARY: We (U.S. Fish and Wildlife Service) have sent an Information Collection Request (ICR) to OMB for review and approval. We summarize the ICR below and describe the nature of the collection and the estimated burden and cost. This information collection is scheduled to expire on January 31, 2014. We may not conduct or sponsor and a person is not required to respond to a collection of information unless it displays a currently valid OMB control number. However, under OMB regulations, we may continue to conduct or sponsor this information collection while it is pending at OMB.

DATES: You must submit comments on or before February 27, 2014.

ADDRESSES: Send your comments and suggestions on this information collection to the Desk Officer for the Department of the Interior at OMB–OIRA at (202) 395–5806 (fax) or *OIRA_Submission@omb.eop.gov* (email). Please provide a copy of your comments to the Service Information Collection Clearance Officer, U.S. Fish and Wildlife Service, MS 2042–PDM, 4401 North Fairfax Drive, Arlington, VA 22203 (mail), or *hope_grey@fws.gov* (email). Please include ''1018–0070'' in the subject line of your comments.

FOR FURTHER INFORMATION CONTACT: To request additional information about this ICR, contact Hope Grey at *hope_grey@fws.gov* (email) or 703–358–2482 (telephone). You may review the ICR online at *http://www.reginfo.gov.* Follow the instructions to review Department of the Interior collections under review by OMB.

SUPPLEMENTARY INFORMATION:

OMB Control Number: 1018–0070.

Title: Incidental Take of Marine Mammals during Specified Oil and Gas Industry Activities, 50 CFR 18.27 and 50 CFR part 18, Subparts I and J.

Service Form Number(s): None.

Type of Request: Revision of a currently approved collection.

Description of Respondents: Oil and gas industry companies.

Respondent's Obligation: Required to obtain or retain a benefit (incidental take regulations and/or a Letter of Authorization (LOA)).

Estimated Number of Respondents: 20.

Frequency of Collection: On occasion.

Activity	Number of annual responses	Completion time per response (hours)	Total annual burden hours
Application for procedural regulations [1]	2	150	300
LOA Requests	25	24	600
Onsite Monitoring and Observation Reports	300	1.5	450
Final Monitoring Report	25	10	250
Polar Bear Den Detection Survey and Report	4	50	200
Totals	356		1,800

[1] Occurs once every 5 years.

Abstract: This information collection includes requirements associated with specified oil and gas industry activities and their incidental taking of polar bears and Pacific walruses in the Beaufort and Chukchi Seas. The Marine Mammal Protection Act (MMPA) of 1972, as amended (16 U.S.C. 1361 *et seq.*), imposed, with certain exceptions, a moratorium on the taking of marine mammals. Section 101(a)(5)(A) of the MMPA directs the Secretary of the Interior to allow, upon request by citizens of the United States, the taking of small numbers of marine mammals incidental to specified activities (other than commercial fishing) if the Secretary makes certain findings and prescribes specific regulations that, among other things, establish permissible methods of taking.

Applicants seeking to conduct activities must request an LOA for the specific activity and submit onsite monitoring reports and a final report of the activity to the Secretary. This is a nonform collection. Regulations at 50 CFR 18.27 outline the procedures and requirements for submitting a request. Specific regulations governing authorized activities in the Beaufort Sea are in 50 CFR part 18, subpart J. Regulations governing authorized activities in the Chukchi Sea are in 50 CFR part 18, subpart I. These regulations provide the applicant with a detailed description of information that we need to evaluate the proposed activity and determine whether or not to issue specific regulations and, subsequently, LOAs.

We use the information to verify the finding required to issue incidental take regulations, to decide if we should issue an LOA, and, if issued, what conditions should be in the LOA. In addition, we analyze the information to determine impacts to polar bears and Pacific walruses and the availability of those marine mammals for subsistence purposes of Alaska Natives.

Comments: On October 3, 2013, we published in the **Federal Register** (78 FR 61379) a notice of our intent to request that OMB renew approval for this information collection. In that notice, we solicited comments for 60 days, ending on December 2, 2013. We received two comments.

One commenter expressed opposition to authorization of activities for the oil and gas industry. We note the concerns raised by this individual; however, we do not grant authorization for industry activities. Instead, we are required under section 101(a)(5)(A) of the MMPA to take certain actions with regard to the ''incidental taking'' of marine mammals that may result from specified activities. The regulations at 50 CFR 18.27(c) define incidental, but not intentional, taking as ''takings which are infrequent,

unavoidable, or accidental. It does not mean that the taking must be unexpected.'' The commenter did not address the information collection requirements, and we did not make any changes to our information collection.

The other commenter expressed support for the information collection process. The commenter stated that the specified information allowed the Service ''to make the required findings for issuing the appropriate authorizations for the incidental taking of marine mammals under the statute and implementing regulations, and ensures permittee compliance with specific monitoring and reporting measures.'' The information also helped ''to provide a better understanding of the types of effects the oil and gas industry activities are having on polar bear and walrus populations and the effectiveness of mitigation and monitoring requirements.''

We again invite comments concerning this information collection on:

- Whether or not the collection of information is necessary, including whether or not the information will have practical utility;
- The accuracy of our estimate of the burden for this collection of information;
- Ways to enhance the quality, utility, and clarity of the information to be collected; and
- Ways to minimize the burden of the collection of information on respondents.

Comments that you submit in response to this notice are a matter of public record. Before including your address, phone number, email address, or other personal identifying information in your comment, you should be aware that your entire comment, including your personal identifying information, may be made publicly available at any time. While you can ask OMB in your comment to withhold your personal identifying information from public review, we cannot guarantee that it will be done.

Dated: January 22, 2014.

Tina A. Campbell,

Chief, Division of Policy and Directives Management, U.S. Fish and Wildlife Service.

[FR Doc. 2014–01477 Filed 1–27–14; 8:45 am]

BILLING CODE 4310–55–P

DEPARTMENT OF THE INTERIOR

Bureau of Land Management

[LLCOF00000 L19900000.PO0000–14X]

Notice of Public Meeting, Rio Grande Natural Area Commission Meetings

AGENCY: Bureau of Land Management, Interior.

ACTION: Notice of public meetings.

SUMMARY: In accordance with the Federal Land Policy and Management Act and the Federal Advisory Committee Act of 1972, the U.S. Department of the Interior, Bureau of Land Management (BLM) Rio Grande Natural Area Commission will meet as indicated below.

DATES: The Rio Grande Natural Area Commission will meet March 13, June 12, September 11 and December 11, 2014. Each meeting will begin at 10 a.m. and adjourn at approximately 3:30 p.m., with public comment periods regarding matters on the agenda at 10:15 a.m. Agendas will be available before the meeting at *www.blm.gov/co/st/en/fo/slvfo/rio_grande_natural/rgna_commission_meeting.html.*

ADDRESSES: Rio Grande Water Conservation District Office, 10900 East U.S. Highway 160, Alamosa, CO 81101.

FOR FURTHER INFORMATION CONTACT: Kyle Sullivan, Public Affairs Specialist, Royal Gorge Field Office, 3028 E Main Street, Cañon City, CO 81212; (719)–269–8553. Persons who use a telecommunications device for the deaf (TDD) may call the Federal Information Relay Service (FIRS) at 1–800–877–8339 to contact the above individual during normal business hours. The FIRS is available 24 hours a day, seven days a week, to leave a message or question with the above individual. You will receive a reply during normal business hours.

SUPPLEMENTARY INFORMATION: The Rio Grande Natural Area Commission was established in the Rio Grande Natural Area Act (16 U.S.C. 460rrr–2). The nine-member commission advises the Secretary of the Interior, through the BLM, concerning the preparation and implementation of a management plan for non-Federal land in the Rio Grande Natural Area, as directed by law. Planned agenda topics for the meetings include finalizing the draft management plan, conducting public outreach for the plan and discussing property boundaries with the Rio Grande Natural Area. The public may offer oral comments at 10:15 a.m. or written statements, which may be submitted for the Commission's consideration. Depending on the number of persons wishing to comment and time available, the time for individual oral comments may be limited. Summary minutes for the meetings will be maintained in the San Luis Valley Field Office and will be available for public inspection and reproduction during regular business hours within 30 days following the meeting. Meeting minutes and agendas are also available at: *www.blm.gov/co/st/en/fo/slvfo.html.*

John Mehlhoff,

BLM Colorado Acting State Director.

[FR Doc. 2014–01527 Filed 1–27–14; 8:45 am]

BILLING CODE 4310–JB–P

DEPARTMENT OF THE INTERIOR

Bureau of Land Management

[14X LLIDB00100 LF1000000.HT0000 LXSS020D0000 4500060036]

Notice of Public Meeting, Gateway West Project Subcommittee of the Resource Advisory Council to the Boise District, Bureau of Land Management, U.S. Department of the Interior

AGENCY: Bureau of Land Management, U.S. Department of the Interior.

ACTION: Notice of public meeting.

SUMMARY: In accordance with the Federal Land Policy and Management Act (FLPMA) and the Federal Advisory Committee Act of 1972 (FACA), the U.S. Department of the Interior, Bureau of Land Management (BLM) Gateway West Project Subcommittee of the Boise District Resource Advisory Council (RAC), will hold meetings as indicated below.

DATES: The meetings will be held on February 26, 2014; March 10, 2014; March 18, 2014; March 27, 2014, and April 2, 2014 at the Boise District Office located at 3948 Development Avenue, Boise, ID 83705, beginning at 9:00 a.m. and adjourning at 3:00 p.m. Members of the public are invited to attend. There will be a public comment period at each meeting.

FOR FURTHER INFORMATION CONTACT: Marsha Buchanan, Supervisory Administrative Specialist and RAC Coordinator, BLM Boise District, 3948 Development Ave., Boise, ID 83705, Telephone (208) 384–3364.

SUPPLEMENTARY INFORMATION: The Gateway West Project Subcommittee advises the Boise District Resource Advisory Council on matters of planning and management of the Gateway West Project (segments 8 and 9). The Boise District Resource Advisory

Council advises the Secretary of the Interior, through the BLM, on a variety of planning and management issues associated with public land management in southwestern Idaho. The subcommittee will be discussing proposed routes of the Gateway West transmission line segments 8 and 9. Agenda items and location may change due to changing circumstances. The public may present written or oral comments to members of the Subcommittee.

It is possible that the Subcommittee will not need all of the scheduled meetings to complete its work. If one or more of the meetings announced in the **DATES** section above are cancelled, announcements will be made through local media outlets and on the BLM Idaho Web site, *http://www.blm.gov/id.*

Individuals who plan to attend and need special assistance should contact the BLM Coordinator as provided above. Persons who use a telecommunications device for the deaf (TDD) may call the Federal Information Relay Service (FIRS) at 1–800–877–8339 to contact the above individual during normal business hours. The FIRS is available 24 hours a day, 7 days a week, to leave a message or question with the above individual. You will receive a reply during normal business hours.

James M. Fincher,

BLM Boise District Manager.

[FR Doc. 2014–01530 Filed 1–27–14; 8:45 am]

BILLING CODE 4310–GG–P

DEPARTMENT OF THE INTERIOR

Bureau of Land Management

[LLWY–957400–14–L13100000–PP0000]

Filing of Plats of Survey, Wyoming

AGENCY: Bureau of Land Management, Interior.

ACTION: Notice.

SUMMARY: The Bureau of Land Management (BLM) has filed the plats of survey of the lands described below in the BLM Wyoming State Office, Cheyenne, Wyoming, on the dates indicated.

FOR FURTHER INFORMATION CONTACT: Bureau of Land Management, 5353 Yellowstone Road, P.O. Box 1828, Cheyenne, Wyoming 82003.

SUPPLEMENTARY INFORMATION: These surveys and supplementals were executed at the request of the Bureau of Land Management, and are necessary for the management of resources. The lands surveyed are:

The plat and field notes representing the dependent resurvey of portions of the east boundary and subdivisional lines, and the survey of the subdivision of section 12, Township 18 North, Range 102 West, Sixth Principal Meridian, Wyoming, Group No. 841, was accepted August 7, 2013.

The plat and field notes representing the retracement and dependent resurvey of a portion of the east boundary, portions of the subdivisional lines and certain mineral surveys, and the survey of the subdivision of section 13, Township 29 North, Ranges 99 and 100 West, Sixth Principal Meridian, Wyoming, Group No. 845, was accepted August 7, 2013.

The plat and field notes representing the dependent resurvey of a portion of the east boundary and subdivisional lines, and the survey of the subdivision of sections 13, 14 and 23, Township 26 North, Range 80 West, Sixth Principal Meridian, Wyoming, Group No. 859, was accepted August 7, 2013.

The supplemental plat showing amended lottings is based upon the dependent resurvey plat accepted June 18, 1982, and supplemental plat accepted June 22, 1988, Township 36 North, Range 75 West, Sixth Principal Meridian, Group No. 890, was accepted August 7, 2013.

The plat and field notes representing the dependent resurvey of a portion of the Fourth Standard Parallel North, through Range 87 West, a portion of the west boundary and a portion of the subdivisional lines, and the survey of the subdivision of sections 5, 7 and 18, Township 16 North, Range 87 West, Sixth Principal Meridian, Wyoming, Group No. 855, was accepted November 22, 2013.

The plat and field notes representing the dependent resurvey of a portion of the south boundary and a portion of the subdivisional lines and the survey of the subdivision of section 34, Township 44 North, Range 82 West, Sixth Principal Meridian, Wyoming, Group No. 862, was accepted November 22, 2013.

The supplemental plat, showing amended lottings, is based upon the resurvey plat approved May 29, 1912, Township 24 North, Range 111 West, Sixth Principal Meridian, Wyoming, Group No. 897, was accepted November 22, 2013.

The plat and field notes representing the dependent resurvey of a portion of the west boundary and portions of the subdivisional lines, the survey of the subdivision of certain sections, and the survey of portions of the Fortification Creek Wilderness Study Area boundary, Township 52 North, Range 75 West, Sixth Principal Meridian, Wyoming, Group No. 864, was accepted December 18, 2013.

The plat and field notes representing the dependent resurvey of a portion of the east boundary and subdivisional lines, and the survey of the subdivision of section 24, Township 30 North, Range 103 West, Sixth Principal Meridian, Wyoming, Group No. 869, was accepted December 18, 2013.

Copies of the preceding described plats and field notes are available to the public at a cost of $1.10 per page.

Dated: January 22, 2014.

John P. Lee,

Chief Cadastral Surveyor, Division of Support Services.

[FR Doc. 2014–01531 Filed 1–27–14; 8:45 am]

BILLING CODE 4310–22–P

INTERNATIONAL TRADE COMMISSION

[Investigation No. 337–TA–907]

Certain Vision-Based Driver Assistance System Cameras and Components Thereof: Institution of Investigation

AGENCY: U.S. International Trade Commission.

ACTION: Notice.

SUMMARY: Notice is hereby given that a complaint was filed with the U.S. International Trade Commission on December 23, 2013, under section 337 of the Tariff Act of 1930, as amended, 19 U.S.C. 1337, on behalf of Magna Electronics Inc. of Auburn Hills, Michigan. The complaint alleges violations of section 337 based upon the importation into the United States, the sale for importation, and the sale within the United States after importation of certain vision-based driver assistance system cameras and components thereof by reason of infringement of U.S. Patent No. 8,116,929 (''the '929 patent'') and U.S. Patent No. 8,593,521 (''the '521 patent''). The complaint further alleges that an industry in the United States exists as required by subsection (a)(2) of section 337.

The complainant requests that the Commission institute an investigation and, after the investigation, issue a limited exclusion order and a cease and desist order.

ADDRESSES: The complaint, except for any confidential information contained therein, is available for inspection during official business hours (8:45 a.m. to 5:15 p.m.) in the Office of the Secretary, U.S. International Trade Commission, 500 E Street SW., Room 112, Washington, DC 20436, telephone

(202) 205–2000. Hearing impaired individuals are advised that information on this matter can be obtained by contacting the Commission's TDD terminal on (202) 205–1810. Persons with mobility impairments who will need special assistance in gaining access to the Commission should contact the Office of the Secretary at (202) 205–2000. General information concerning the Commission may also be obtained by accessing its internet server at *http://www.usitc.gov.* The public record for this investigation may be viewed on the Commission's electronic docket (EDIS) at *http://edis.usitc.gov.*

FOR FURTHER INFORMATION CONTACT: The Office of Unfair Import Investigations, U.S. International Trade Commission, telephone (202) 205–2560.

Authority: The authority for institution of this investigation is contained in section 337 of the Tariff Act of 1930, as amended, and in section 210.10 of the Commission's Rules of Practice and Procedure, 19 CFR 210.10 (2013).

Scope of Investigation: Having considered the complaint, the U.S. International Trade Commission, on January 22, 2014, *ordered that*—

(1) Pursuant to subsection (b) of section 337 of the Tariff Act of 1930, as amended, an investigation be instituted to determine whether there is a violation of subsection (a)(1)(B) of section 337 in the importation into the United States, the sale for importation, or the sale within the United States after importation of certain vision-based driver assistance system cameras and components thereof by reason of infringement of one or more of claims 1, 2, 4, and 5 of the '929 patent and claims 1, 29, 35, and 39 of the '521 patent, and whether an industry in the United States exists as required by subsection (a)(2) of section 337;

(2) For the purpose of the investigation so instituted, the following are hereby named as parties upon which this notice of investigation shall be served:

(a) The complainant is: Magna Electronics Inc., 2050 Auburn Road, Auburn Hills, MI 48326.

(b) The respondent is the following entity alleged to be in violation of section 337, and is the party upon which the complaint is to be served:

TRW Automotive U.S., LLC, 12001 Tech Center Drive, Livonia, MI 48150.

(c) The Office of Unfair Import Investigations, U.S. International Trade Commission, 500 E Street SW., Suite 401, Washington, DC 20436;

(3) Complainant's motion to consolidate this investigation with Inv. No. 337–TA–899 (Motion Docket No. 2993–001) is denied; and

(4) For the investigation so instituted, the Chief Administrative Law Judge, U.S. International Trade Commission, shall designate the presiding Administrative Law Judge.

Responses to the complaint and the notice of investigation must be submitted by the named respondent in accordance with section 210.13 of the Commission's Rules of Practice and Procedure, 19 CFR 210.13. Pursuant to 19 CFR 201.16(e) and 210.13(a), such responses will be considered by the Commission if received not later than 20 days after the date of service by the Commission of the complaint and the notice of investigation. Extensions of time for submitting responses to the complaint and the notice of investigation will not be granted unless good cause therefor is shown.

Failure of the respondent to file a timely response to each allegation in the complaint and in this notice may be deemed to constitute a waiver of the right to appear and contest the allegations of the complaint and this notice, and to authorize the administrative law judge and the Commission, without further notice to the respondent, to find the facts to be as alleged in the complaint and this notice and to enter an initial determination and a final determination containing such findings, and may result in the issuance of an exclusion order or a cease and desist order or both directed against the respondent.

By order of the Commission.

Issued: January 23, 2014.

Lisa R. Barton,

Acting Secretary to the Commission.

[FR Doc. 2014–01583 Filed 1–27–14; 8:45 am]

BILLING CODE 7020–02–P

DEPARTMENT OF JUSTICE

Notice of Lodging of Proposed Consent Decree Under the Comprehensive Environmental Response, Compensation, and Liability Act

On January 22, 2014, the Department of Justice lodged a proposed consent decree with the United States District Court for the Middle District of Georgia in the lawsuit entitled *United States of America* v. *Wynn E. Housel.,* Civil Action No. 3:11-cv-53(CAR), regarding the removal action at the Cannon Drive Drum Superfund Site located at 148 Cannon Drive, Social Circle, Georgia (Site).

In the complaint, the United States, on behalf of the Environmental Protection Agency (EPA), asserts that Wynn Housel purchased hazardous substances, including resins, adhesives, cleaning solvents, paint thinners and corrosives, from the Defense Logistics Agency of the Department of Defense and brought them to the Site where he stored and ultimately abandoned them. The United States asserts a claim under Section 107(a) of the Comprehensive Environmental Response, Compensation, and Liability Act (CERCLA), 42 U.S.C. 9607(a), to recover EPA's past removal costs, approximately $1.3 million, with respect to the Site. Based on his financial status, reviewed by a qualified financial analyst, the consent decree recognizes Mr. Housel lacks the ability to pay response costs and does not include recovery of any past costs from him. The consent decree bars Mr. Housel from purchasing excess property of the United States.

The publication of this notice opens a period for public comment on the consent decree. Comments should be addressed to the Assistant Attorney General, Environment and Natural Resources Division, and should refer to *United States* v. *Wynn E. Housel.,* D.J. Ref. No. 90–11–3–09698. All comments must be submitted no later than thirty (30) days after the publication date of this notice. Comments may be submitted either by email or by mail:

To submit comments:	Send them to:
By email	*pubcomment-ees.enrd@usdoj.gov.*
By mail	Assistant Attorney General, U.S. DOJ—ENRD, P.O. Box 7611, Washington, DC 20044–7611.

During the public comment period, the consent decree may be examined and downloaded at this Justice Department Web site: *http://www.usdoj.gov/enrd/Consent_Decrees.html.* We will provide a paper copy of the consent decree upon written request and payment of reproduction costs. Please mail your request and payment to:

Consent Decree Library, U.S. DOJ—ENRD, P.O. Box 7611, Washington, DC 20044–7611.

Please enclose a check or money order for $5.25 (25 cents per page

reproduction cost) payable to the United States Treasury.

Henry S. Friedman,

Assistant Section Chief, Environmental Enforcement Section, Environment and Natural Resources Division.

[FR Doc. 2014–01561 Filed 1–27–14; 8:45 am]

BILLING CODE 4410–15–P

DEPARTMENT OF JUSTICE

Antitrust Division

Notice Pursuant to the National Cooperative Research and Production Act of 1993—PXI Systems Alliance, Inc.

Notice is hereby given that, on December 26, 2013, pursuant to Section 6(a) of the National Cooperative Research and Production Act of 1993, 15 U.S.C. 4301 *et seq.* (''the Act''), PXI Systems Alliance, Inc. has filed written notifications simultaneously with the Attorney General and the Federal Trade Commission disclosing changes in its membership. The notifications were filed for the purpose of extending the Act's provisions limiting the recovery of antitrust plaintiffs to actual damages under specified circumstances. Specifically, Dewetron GmbH, Grambach, AUSTRIA, has been added as a party to this venture.

Also, Simbol Test Systems, Inc., Gatineau, Quebec, CANADA; PLX Technology, Sunnyvale, CA; C&H Technologies, Round Rock, TX; and Beijing Aerospace Measurement & Control, Corp., Beijing, PEOPLE'S REPUBLIC OF CHINA, have withdrawn as parties to this venture.

No other changes have been made in either the membership or planned activity of the group research project. Membership in this group research project remains open, and PXI Systems Alliance, Inc. intends to file additional written notifications disclosing all changes in membership.

On November 22, 2000, PXI Systems Alliance, Inc. filed its original notification pursuant to Section 6(a) of the Act. The Department of Justice published a notice in the **Federal Register** pursuant to Section 6(b) of the Act on March 8, 2001 (66 FR 13971).

The last notification was filed with the Department on October 10, 2013. A notice was published in the **Federal Register** pursuant to Section 6(b) of the Act on November 12, 2013 (78 FR 67399).

Patricia A. Brink,

Director of Civil Enforcement, Antitrust Division.

[FR Doc. 2014–01596 Filed 1–27–14; 8:45 am]

BILLING CODE 4410–11–P

DEPARTMENT OF JUSTICE

Antitrust Division

Notice Pursuant to the National Cooperative Research and Production Act of 1993—Members of SGIP 2.0, Inc.

Notice is hereby given that, on December 27, 2013, pursuant to Section 6(a) of the National Cooperative Research and Production Act of 1993, 15 U.S.C. 4301 *et seq.* (''the Act''), Members of SGIP 2.0, Inc. (''MSGIP 2.0'') has filed written notifications simultaneously with the Attorney General and the Federal Trade Commission disclosing changes in its membership. The notifications were filed for the purpose of extending the Act's provisions limiting the recovery of antitrust plaintiffs to actual damages under specified circumstances. Specifically, IONEX Energy Storage Systems, Inc., Austin, TX; Korea Smart Grid Institute, Teheran-ro, Gangnam-gu, Seoul, REPUBLIC OF KOREA; Korea Testing Laboratory, Guro-gu, Seoul, REPUBLIC OF KOREA; Wells Fargo, San Francisco, CA; PosiGen, Metairie, LA; College of Engineering, Computer Science, and Construction Management CSU, Chico, CA; Power Generation Services, Inc., Raleigh, NC; and XBRL US, Inc., Washington, DC, have been added as parties to this venture.

No other changes have been made in either the membership or planned activity of the group research project. Membership in this group research project remains open, and MSGIP 2.0 intends to file additional written notifications disclosing all changes in membership.

On February 5, 2013, MSGIP 2.0 filed its original notification pursuant to Section 6(a) of the Act. The Department of Justice published a notice in the **Federal Register** pursuant to Section 6(b) of the Act on March 7, 2013 (78 FR 14836).

The last notification was filed with the Department on October 11, 2013. A notice was published in the **Federal Register** pursuant to Section 6(b) of the Act on December 9, 2013 (78 FR 73883).

Patricia A. Brink,

Director of Civil Enforcement, Antitrust Division.

[FR Doc. 2014–01565 Filed 1–27–14; 8:45 am]

BILLING CODE P

DEPARTMENT OF JUSTICE

Antitrust Division

Notice Pursuant to the National Cooperative Research and Production Act of 1993—Advanced Media Workflow Association, Inc.

Notice is hereby given that, on December 20, 2013, pursuant to Section 6(a) of the National Cooperative Research and Production Act of 1993, 15 U.S.C. 4301 *et seq.* (''the Act''), Advanced Media Workflow Association, Inc. has filed written notifications simultaneously with the Attorney General and the Federal Trade Commission disclosing changes in its membership. The notifications were filed for the purpose of extending the Act's provisions limiting the recovery of antitrust plaintiffs to actual damages under specified circumstances. Specifically, Karl Schubert (individual member), Portland, OR; Stefan Riediger (individual member), Munich, GERMANY, have been added as parties to this venture.

Also, Globecomm, Hauppauge, NY; and Harry Plate (individual member), Snohomish, WA, have withdrawn as parties to this venture. In addition, Harris Corp. has changed its name to Harris Broadcast, Monument, CO.

No other changes have been made in either the membership or planned activity of the group research project. Membership in this group research project remains open, and Advanced Media Workflow Association, Inc. intends to file additional written notifications disclosing all changes in membership.

On March 28, 2000, Advanced Media Workflow Association, Inc. filed its original notification pursuant to Section 6(a) of the Act. The Department of Justice published a notice in the **Federal Register** pursuant to Section 6(b) of the Act on June 29, 2000 (65 FR 40127).

The last notification was filed with the Department on September 24, 2013. A notice was published in the **Federal Register** pursuant to Section 6(b) of the

Act on November 12, 2013 (78 FR 67401).

Patricia A. Brink,

Director of Civil Enforcement, Antitrust Division.

[FR Doc. 2014–01595 Filed 1–27–14; 8:45 am]

BILLING CODE P

DEPARTMENT OF JUSTICE

Antitrust Division

Notice Pursuant to the National Cooperative Research and Production Act of 1993—Cable Television Laboratories, Inc.

Notice is hereby given that, on December 19, 2013, pursuant to Section 6(a) of the National Cooperative Research and Production Act of 1993, 15 U.S.C. 4301 *et seq.* (''the Act''), Cable Television Laboratories, Inc. (''CableLabs'') has filed written notifications simultaneously with the Attorney General and the Federal Trade Commission disclosing changes in its membership. The notifications were filed for the purpose of extending the Act's provisions limiting the recovery of antitrust plaintiffs to actual damages under specified circumstances. Specifically, Grupo Televisa, S.A.B., Mexico City, MEXICO, Numericable, Champs sur Marne, FRANCE, Taiwan Broadband Communications, Co., Ltd, Taipei City, REPUBLIC OF CHINA, and Cablenet Communication Systems Ltd., Nicosia, CYPRUS, have been added as parties to this venture.

No other changes have been made in either the membership or planned activity of the group research project. Membership in this group research project remains open, and CableLabs intends to file additional written notifications disclosing all changes in membership.

On August 8, 1988, CableLabs filed its original notification pursuant to Section 6(a) of the Act. The Department of Justice published a notice in the **Federal Register** pursuant to Section 6(b) of the Act on September 7, 1988 (53 FR 34593).

The last notification was filed with the Department on August 26, 2013. A notice was published in the **Federal Register** pursuant to Section 6(b) of the Act on September 24, 2013 (78 FR 58559).

Patricia A. Brink,

Director of Civil Enforcement, Antitrust Division.

[FR Doc. 2014–01598 Filed 1–27–14; 8:45 am]

BILLING CODE P

DEPARTMENT OF JUSTICE

Antitrust Division

Notice Pursuant to the National Cooperative Research and Production Act of 1993—ASTM International Standards

Notice is hereby given that, on December 9, 2013, pursuant to Section 6(a) of the National Cooperative Research and Production Act of 1993, 15 U.S.C. 4301 *et seq.* (''the Act''), ASTM International (''ASTM'') has filed written notifications simultaneously with the Attorney General and the Federal Trade Commission disclosing additions or changes to its standards development activities. The notifications were filed for the purpose of extending the Act's provisions limiting the recovery of antitrust plaintiffs to actual damages under specified circumstances. Specifically, ASTM has provided an updated list of current, ongoing ASTM standards activities originating between September 2013 and December 2013 designated as Work Items. A complete listing of ASTM Work Items, along with a brief description of each, is available at *http://www.astm.org.*

On September 15, 2004, ASTM filed its original notification pursuant to Section 6(a) of the Act. The Department of Justice published a notice in the **Federal Register** pursuant to Section 6(b) of the Act on November 10, 2004 (69 FR 65226).

The last notification was filed with the Department on September 16, 2013. A notice was published in the **Federal Register** pursuant to Section 6(b) of the Act on October 28, 2013 (78 FR 64248).

Patricia A. Brink,

Director of Civil Enforcement, Antitrust Division.

[FR Doc. 2014–01591 Filed 1–27–14; 8:45 am]

BILLING CODE P

DEPARTMENT OF JUSTICE

Antitrust Division

Notice Pursuant to the National Cooperative Research and Production Act of 1993—National Council of State Boards of Nursing

Notice is hereby given that, on December 26, 2013, pursuant to Section 6(a) of the National Cooperative Research and Production Act of 1993, 15 U.S.C. 4301 *et seq.* (''the Act''), National Council of State Boards of Nursing (''NCSBN'') has filed written notifications simultaneously with the Attorney General and the Federal Trade Commission disclosing (1) the name and principal place of business of the standards development organization and (2) the nature and scope of its standards development activities. The notifications were filed for the purpose of invoking the Act's provisions limiting the recovery of antitrust plaintiffs to actual damages under specified circumstances.

Pursuant to Section 6(b) of the Act, the name and principal place of business of the standards development organization is National Council of State Boards of Nursing, Chicago, IL. The nature and scope of NCSBN's standards development activities are nurse competency research and assessment.

Patricia A. Brink,

Director of Civil Enforcement, Antitrust Division.

[FR Doc. 2014–01589 Filed 1–27–14; 8:45 am]

BILLING CODE P

DEPARTMENT OF JUSTICE

Parole Commission

Sunshine Act Meeting

Record of Vote of Meeting Closure (Pub. L. 94–409) (5 U.S.C. 552b)

I, Isaac Fulwood, of the United States Parole Commission, was present at a meeting of said Commission, which started at approximately 11:00 a.m., on Tuesday, January 14, 2014 at the U.S. Parole Commission, 90 K Street NE., Third Floor, Washington, DC 20530. The purpose of the meeting was to discuss original jurisdiction cases pursuant to 28 CFR 2.27. Five Commissioners were present, constituting a quorum when the vote to close the meeting was submitted.

Public announcement further describing the subject matter of the meeting and certifications of the General Counsel that this meeting may be closed by votes of the Commissioners present were submitted to the Commissioners prior to the conduct of any other business. Upon motion duly made, seconded, and carried, the following Commissioners voted that the meeting be closed: Isaac Fulwood, Jr., Cranston J. Mitchell, Patricia K. Cushwa, J. Patricia Wilson Smoot and Charles T. Massarone.

In witness whereof, I make this official record of the vote taken to close this meeting and authorize this record to be made available to the public.

Dated: January 15, 2014.

Isaac Fulwood, Jr.,

Chairman, U.S. Parole Commission.

[FR Doc. 2014–01616 Filed 1–24–14; 4:15 pm]

BILLING CODE 4410–31–P

DEPARTMENT OF LABOR

Office of the Secretary

Agency Information Collection Activities; Submission for OMB Review; Comment Request; Job Corps Health Questionnaire

ACTION: Notice.

SUMMARY: The Department of Labor (DOL) is submitting the Employment and Training Administration (ETA) sponsored information collection request (ICR) revision titled, ''Job Corps Health Questionnaire,'' to the Office of Management and Budget (OMB) for review and approval for use in accordance with the Paperwork Reduction Act (PRA) of 1995 (44 U.S.C. 3501 *et seq.*).

DATES: Submit comments on or before February 27, 2014.

ADDRESSES: A copy of this ICR with applicable supporting documentation; including a description of the likely respondents, proposed frequency of response, and estimated total burden may be obtained free of charge from the RegInfo.gov Web site at *http://www.reginfo.gov/public/do/PRAViewICR?ref_nbr=201306-1205-001* (this link will only become active on the day following publication of this notice) or by contacting Michel Smyth by telephone at 202–693–4129, TTY 202–693–8064, (these are not toll-free numbers) or sending an email to *DOL_PRA_PUBLIC@dol.gov.*

Submit comments about this request by mail or courier to the Office of Information and Regulatory Affairs, Attn: OMB Desk Officer for DOL–ETA, Office of Management and Budget, Room 10235, 725 17th Street NW., Washington, DC 20503; by Fax: 202–395–6881 (this is not a toll-free number); or by email: *OIRA_submission@omb.eop.gov.* Commenters are encouraged, but not required, to send a courtesy copy of any comments by mail or courier to the U.S. Department of Labor-OASAM, Office of the Chief Information Officer, Attn: Departmental Information Compliance Management Program, Room N1301, 200 Constitution Avenue NW., Washington, DC 20210; or by email: *DOL_PRA_PUBLIC@dol.gov.*

FOR FURTHER INFORMATION CONTACT: Michel Smyth by telephone at 202–693–4129, TTY 202–693–8064, (these are not toll-free numbers) or sending an email to *DOL_PRA_PUBLIC@dol.gov.*

Authority: 44 U.S.C. 3507(a)(1)(D).

SUPPLEMENTARY INFORMATION: This ICR seeks to revise the Job Corps Health Questionnaire, Form ETA–653. Information on the health status of a Job Corps applicant is obtained and entered on the Form during an interview with an admissions counselor as part of the admissions process. This ICR has been classified as a revision, because the ETA has made a few minor adjustments to the Form. None of these changes is expected to result in changes to the burden estimates.

This information collection is subject to the PRA. A Federal agency generally cannot conduct or sponsor a collection of information, and the public is generally not required to respond to an information collection, unless it is approved by the OMB under the PRA and displays a currently valid OMB Control Number. In addition, notwithstanding any other provisions of law, no person shall generally be subject to penalty for failing to comply with a collection of information that does not display a valid Control Number. *See* 5 CFR 1320.5(a) and 1320.6. The DOL obtains OMB approval for this information collection under Control Number 1205–0033. The current approval is scheduled to expire on January 31, 2014; however, the DOL notes that existing information collection requirements submitted to the OMB receive a month-to-month extension while they undergo review. New requirements would only take effect upon OMB approval. For additional substantive information about this ICR, see the related notice published in the **Federal Register** on July 17, 2014 (78 FR 42803).

Interested parties are encouraged to send comments to the OMB, Office of Information and Regulatory Affairs at the address shown in the **ADDRESSES** section within 30 days of publication of this notice in the **Federal Register**. In order to help ensure appropriate consideration, comments should mention OMB Control Number 1205–0033. The OMB is particularly interested in comments that:

- Evaluate whether the proposed collection of information is necessary for the proper performance of the functions of the agency, including whether the information will have practical utility;
- Evaluate the accuracy of the agency's estimate of the burden of the proposed collection of information, including the validity of the methodology and assumptions used;
- Enhance the quality, utility, and clarity of the information to be collected; and
- Minimize the burden of the collection of information on those who are to respond, including through the use of appropriate automated, electronic, mechanical, or other technological collection techniques or other forms of information technology, e.g., permitting electronic submission of responses.

Agency: DOL–ETA.

Title of Collection: Job Corps Health Questionnaire.

OMB Control Number: 1205–0033.

Affected Public: Individuals or households.

Total Estimated Number of Respondents: 87,851.

Total Estimated Number of Responses: 87,851.

Total Estimated Annual Burden Hours: 7,298.

Total Estimated Annual Other Costs Burden: $0.

Dated: January 22, 2014.

Michel Smyth,

Departmental Clearance Officer.

[FR Doc. 2014–01479 Filed 1–27–14; 8:45 am]

BILLING CODE 4510–FT–P

DEPARTMENT OF LABOR

Office of the Secretary

Agency Information Collection Activities; Submission for OMB Review; Comment Request; Safety Defects—Examination, Correction, and Records

ACTION: Notice.

SUMMARY: The Department of Labor (DOL) is submitting the Mine Safety and Health Administration (MSHA) sponsored information collection request (ICR) titled, ''Safety Defects—Examination, Correction, and Records,'' to the Office of Management and Budget (OMB) for review and approval for continued use, without change, in accordance with the Paperwork Reduction Act of 1995 (PRA), 44 U.S.C. 3501 *et seq.*

DATES: Submit comments on or before February 27, 2014.

ADDRESSES: A copy of this ICR with applicable supporting documentation; including a description of the likely respondents, proposed frequency of response, and estimated total burden may be obtained free of charge from the RegInfo.gov Web site at *http://www.reginfo.gov/public/do/*

PRAViewICR?ref_nbr=201310-1219-001 (this link will only become active on the day following publication of this notice) or by contacting Michel Smyth by telephone at 202–693–4129, TTY 202–693–8064, (these are not toll-free numbers) or sending an email to *DOL_PRA_PUBLIC@dol.gov.*

Submit comments about this request by mail or courier to the Office of Information and Regulatory Affairs, Attn: OMB Desk Officer for DOL–MSHA, Office of Management and Budget, Room 10235, 725 17th Street NW., Washington, DC 20503; by Fax: 202–395–6881 (this is not a toll-free number); or by email: *OIRA_submission@omb.eop.gov*. Commenters are encouraged, but not required, to send a courtesy copy of any comments by mail or courier to the U.S. Department of Labor–OASAM, Office of the Chief Information Officer, Attn: Departmental Information Compliance Management Program, Room N1301, 200 Constitution Avenue NW., Washington, DC 20210; or by email: *DOL_PRA_PUBLIC@dol.gov*.

FOR FURTHER INFORMATION CONTACT: Michel Smyth by telephone at 202–693–4129, TTY 202–693–8064, (these are not toll-free numbers) or by email at *DOL_PRA_PUBLIC@dol.gov.*

Authority: 44 U.S.C. 3507(a)(1)(D).

SUPPLEMENTARY INFORMATION: This ICR seeks to extend PRA authorization for the Safety Defects—Examination, Correction, and Records information collection requirements. Federal Mine Safety and Health Act of 1977 (Mine Act) section 103(h), 30 U.S.C. 813(h), authorizes the MSHA to collect information necessary to carry out its duty in protecting the safety and health of miners. This ICR covers information collection requirements mentioned in this notice.

Regulations 30 CFR 56.13015 and 57.13015 require compressed-air receivers and other unfired pressure vessels to be inspected by an inspector holding a valid National Board Commission and in accordance with the applicable chapters of the National Board Inspection Code, a Manual for Boiler and Pressure Vessels Inspectors, 1979. Safety defects found on compressed-air receivers and other unfired pressure vessels have caused injuries and fatalities in the mining industry. A record of each inspection must be kept in accordance with National Board Inspection Code requirements, and the records must be made available to the Secretary or an authorized representative.

Regulations 30 CFR 56.13030 and 57.13030 require that a fired pressure vessel (boiler) be equipped with water level gauges, pressure gauges, automatic pressure-relief valves, blowdown piping and other safety devices approved by the American Society of Mechanical Engineers (ASME) to protect against hazards from overpressure, a flameout, fuel interruption and low water level. These sections also require that a record of each inspection and repair be retained by the mine operator in accordance with the requirements of the ASME Boiler and Pressure Vessel Code, 1977, and the National Board Inspection Code (progressive records—no limit on retention time) and shall be made available to the Secretary or an authorized representative.

Regulations 30 CFR 56.14100 and 57.14100 require an operator to inspect equipment, machinery, and each tool to be used during a shift for safety defects before the equipment is placed in operation. Any defect affecting safety is required to be corrected in a timely manner. In an instance where the defect makes continued operation of the equipment hazardous to persons, the equipment must be removed from service, tagged to identify that it is out of use, and repaired before use is resumed. Safety defects on self-propelled mobile equipment account for many injuries and fatalities in the mining industry. Inspection of this equipment prior to use is required to assure safe operation. The equipment operator is required to make a visual and operational check of the various primary operating systems that affect safety, such as brakes, lights, horn, seatbelts, tires, steering, back-up alarm, windshield, cab safety glass, rear and side view mirrors, and other safety and health related items. Any found defect found is required to be either corrected immediately or reported to, and recorded by, the mine operator prior to the timely correction. A record is not required if an unsafe condition is not present upon examination prior to use if the defect is corrected immediately. The precise format in which the record is kept is left to the discretion of the mine operator. A report of an uncorrected defect is required to be recorded by the mine operator and kept at the mine office from the date the defects are recorded, until the defects are corrected.

A competent person designated by the operator must examine each working place at least once each shift for conditions that may adversely affect safety or health. A record of such examinations must be kept by the operator for a period of one year and must be made available for review by the Secretary or an authorized representative.

These information collection requirements are subject to the PRA. A Federal agency generally cannot conduct or sponsor a collection of information, and the public is generally not required to respond to an information collection, unless it is approved by the OMB under the PRA and displays a currently valid OMB Control Number. In addition, notwithstanding any other provisions of law, no person shall generally be subject to penalty for failing to comply with a collection of information that does not display a valid Control Number. *See* 5 CFR 1320.5(a) and 1320.6. The DOL obtains OMB approval for these information collections under Control Number 1219–0089.

OMB authorization for an ICR cannot be for more than three (3) years without renewal, and the current approval for this collection is scheduled to expire on January 31, 2014. The DOL seeks to extend PRA authorization for this information collection for three (3) more years, without any change to existing requirements. The DOL notes that existing information collection requirements submitted to the OMB receive a month-to-month extension while they undergo review. For additional substantive information about this ICR, see the related notice published in the **Federal Register** on September 3, 2013.

Interested parties are encouraged to send comments to the OMB, Office of Information and Regulatory Affairs at the address shown in the **ADDRESSES** section within 30 days of publication of this notice in the **Federal Register**. In order to help ensure appropriate consideration, comments should mention OMB Control Number 1219–0089. The OMB is particularly interested in comments that:

- Evaluate whether the proposed collection of information is necessary for the proper performance of the functions of the agency, including whether the information will have practical utility;
- Evaluate the accuracy of the agency's estimate of the burden of the proposed collection of information, including the validity of the methodology and assumptions used;
- Enhance the quality, utility, and clarity of the information to be collected; and
- Minimize the burden of the collection of information on those who are to respond, including through the use of appropriate automated, electronic, mechanical, or other technological collection techniques or

other forms of information technology, e.g., permitting electronic submission of responses.

Agency: DOL–MSHA.

Title of Collection: Safety Defects—Examination, Correction, and Records.

OMB Control Number: 1219–0089.

Affected Public: Private Sector—businesses or other for-profits.

Total Estimated Number of Respondents: 12,375.

Total Estimated Number of Responses: 10,368,771.

Total Estimated Annual Burden Hours: 1,145,141.

Total Estimated Annual Other Costs Burden: $0.

Dated: January 22, 2014.

Michel Smyth,

Departmental Clearance Officer.

[FR Doc. 2014–01557 Filed 1–27–14; 8:45 am]

BILLING CODE 4510–43–P

DEPARTMENT OF LABOR

Office of the Secretary

Agency Information Collection Activities; Submission for OMB Review; Comment Request; Nonmonetary Determination Activity Report

ACTION: Notice.

SUMMARY: The Department of Labor (DOL) is submitting the Employment and Training Administration (ETA) sponsored information collection request (ICR) titled, ''Nonmonetary Determination Activity Report,'' to the Office of Management and Budget (OMB) for review and approval for continued use, without change, in accordance with the Paperwork Reduction Act of 1995 (PRA), 44 U.S.C. 3501 *et seq.*

DATES: Submit comments on or before February 27, 2014.

ADDRESSES: A copy of this ICR with applicable supporting documentation; including a description of the likely respondents, proposed frequency of response, and estimated total burden may be obtained free of charge from the RegInfo.gov Web site at *http://www.reginfo.gov/public/do/PRAViewICR?ref_nbr=201307-1205-001* (this link will only become active on the day following publication of this notice) or by contacting Michel Smyth by telephone at 202–693–4129, TTY 202–693–8064, (these are not toll-free numbers) or sending an email to *DOL_PRA_PUBLIC@dol.gov.*

Submit comments about this request by mail or courier to the Office of Information and Regulatory Affairs, Attn: OMB Desk Officer for DOL–ETA, Office of Management and Budget, Room 10235, 725 17th Street NW., Washington, DC 20503; by Fax: 202–395–6881 (this is not a toll-free number); or by email: *OIRA_submission@omb.eop.gov.* Commenters are encouraged, but not required, to send a courtesy copy of any comments by mail or courier to the U.S. Department of Labor-OASAM, Office of the Chief Information Officer, Attn: Departmental Information Compliance Management Program, Room N1301, 200 Constitution Avenue NW., Washington, DC 20210; or by email: *DOL_PRA_PUBLIC@dol.gov.*

FOR FURTHER INFORMATION CONTACT: Michel Smyth by telephone at 202–693–4129, TTY 202–693–8064, (these are not toll-free numbers) or by email at *DOL_PRA_PUBLIC@dol.gov.*

Authority: 44 U.S.C. 3507(a)(1)(D).

SUPPLEMENTARY INFORMATION: This ICR seeks to maintain PRA authorization for the Nonmonetary Determination Activity Report (Form ETA–207) information collection. Form ETA–207 collects data on the number and types of issues States adjudicate when unemployment insurance claims are filed. The Form also collects data on the number of disqualifications issued for reasons associated with a claimant's separation from employment and reasons related to a claimant's continuing eligibility for benefits. These data are used by the ETA, Office of Unemployment Insurance to determine workload counts for allocation of administrative funds, to analyze the ratio of disqualifications to determinations, and to examine and evaluate the program effect of nonmonetary activities.

This information collection is subject to the PRA. A Federal agency generally cannot conduct or sponsor a collection of information, and the public is generally not required to respond to an information collection, unless it is approved by the OMB under the PRA and displays a currently valid OMB Control Number. In addition, notwithstanding any other provisions of law, no person shall generally be subject to penalty for failing to comply with a collection of information that does not display a valid Control Number. *See* 5 CFR 1320.5(a) and 1320.6. The DOL obtains OMB approval for this information collection under Control Number 1205–0150.

OMB authorization for an ICR cannot be for more than three (3) years without renewal, and the current approval for this collection is scheduled to expire on February 28, 2014. The DOL seeks to extend PRA authorization for this information collection for three (3) more years, without any change to existing requirements. The DOL also notes that existing information collection requirements submitted to the OMB receive a month-to-month extension while they undergo review. For additional substantive information about this ICR, see the related notice published in the **Federal Register** on July 3, 2013 (78 FR 40194).

Interested parties are encouraged to send comments to the OMB, Office of Information and Regulatory Affairs at the address shown in the **ADDRESSES** section within 30 days of publication of this notice in the **Federal Register**. In order to help ensure appropriate consideration, comments should mention OMB Control Number 1205–0150. The OMB is particularly interested in comments that:

- Evaluate whether the proposed collection of information is necessary for the proper performance of the functions of the agency, including whether the information will have practical utility;
- Evaluate the accuracy of the agency's estimate of the burden of the proposed collection of information, including the validity of the methodology and assumptions used;
- Enhance the quality, utility, and clarity of the information to be collected; and
- Minimize the burden of the collection of information on those who are to respond, including through the use of appropriate automated, electronic, mechanical, or other technological collection techniques or other forms of information technology, e.g., permitting electronic submission of responses.

Agency: DOL–ETA.

Title of Collection: Nonmonetary Determination Activity Report.

OMB Control Number: 1205–0150.

Affected Public: State, Local, and Tribal Governments.

Total Estimated Number of Respondents: 53.

Total Estimated Number of Responses: 636.

Total Estimated Annual Burden Hours: 2,544.

Total Estimated Annual Other Costs Burden: $0.

Dated: January 22, 2014.

Michel Smyth,

Departmental Clearance Officer.

[FR Doc. 2014–01545 Filed 1–27–14; 8:45 am]

BILLING CODE 4510–FW–P

DEPARTMENT OF LABOR

Office of the Secretary

Agency Information Collection Activities; Submission for OMB Review; Comment Request; Health Standards for Diesel Particulate Matter Exposure in Underground Coal Mines

ACTION: Notice.

SUMMARY: The Department of Labor (DOL) is submitting the Mine Safety and Health Administration (MSHA) sponsored information collection request (ICR) titled, ''Health Standards for Diesel Particulate Matter Exposure in Underground Coal Mines,'' to the Office of Management and Budget (OMB) for review and approval for continued use, without change, in accordance with the Paperwork Reduction Act of 1995 (PRA), 44 U.S.C. 3501 et seq.

DATES: Submit comments on or before February 27, 2014.

ADDRESSES: A copy of this ICR with applicable supporting documentation; including a description of the likely respondents, proposed frequency of response, and estimated total burden may be obtained free of charge from the RegInfo.gov Web site at *http://www.reginfo.gov/public/do/PRAViewICR?ref_nbr=120310-1219-002* (this link will only become active on the day following publication of this notice) or by contacting Michel Smyth by telephone at 202–693–4129, TTY 202–693–8064, (these are not toll-free numbers) or sending an email to *DOL_PRA_PUBLIC@dol.gov.*

Submit comments about this request by mail or courier to the Office of Information and Regulatory Affairs, Attn: OMB Desk Officer for DOL–MSHA, Office of Management and Budget, Room 10235, 725 17th Street NW., Washington, DC 20503; by Fax: 202–395–6881 (this is not a toll-free number); or by email: *OIRA_submission@omb.eop.gov*. Commenters are encouraged, but not required, to send a courtesy copy of any comments by mail or courier to the U.S. Department of Labor–OASAM, Office of the Chief Information Officer, Attn: Departmental Information Compliance Management Program, Room N1301, 200 Constitution Avenue NW., Washington, DC 20210; or by email: *DOL_PRA_PUBLIC@dol.gov.*

FOR FURTHER INFORMATION CONTACT: Michel Smyth by telephone at 202–693–4129, TTY 202–693–8064, (these are not toll-free numbers) or by email at *DOL_PRA_PUBLIC@dol.gov.*

Authority: 44 U.S.C. 3507(a)(1)(D).

SUPPLEMENTARY INFORMATION: This ICR seeks to extend PRA authorization for the Health Standards for Diesel Particulate Matter Exposure in Underground Coal Mines information collection. Federal Mine Safety and Health Act of 1977 (Mine Act) section 101(a) provides that the Secretary of Labor—as may be appropriate—shall develop, promulgate, and revise improved mandatory health or safety standards for the protection of life and prevention of injuries in coal or other mines. In addition, Mine Act section 103(h) mandates that a mine operator keep any records and make any reports reasonably necessary for the MSHA to perform its duties under the Mine Act. The MSHA has established standards and regulations for diesel-powered equipment in underground coal mines that provide additional important protection for coal miners who work on and around diesel-powered equipment. The standards are designed to reduce risks to an underground coal miner of serious health hazards associated with exposure to high concentrations of diesel particulate matter. The standards cover information collection requirements, codified in regulations 30 CFR 72.510(a) and (b) and 72.520(a) and (b), for underground coal mine operators.

Section 72.510(a) requires an underground coal mine operator to provide annual training to each miner who may be exposed to diesel emissions. The training must cover health risks associated with exposure to diesel particulate matter; methods used in the mine to control diesel particulate concentrations; identification of the personnel responsible for maintaining those controls; and actions miners must take to ensure controls operate as intended. Section 72.510(b) requires the operator to keep a record of the training for one year.

Section 72.520(a) and (b) requires an underground coal mine operator to maintain an inventory of diesel powered equipment units together with a list of information about any unit's emission control or filtration system. The operator must update the list within seven (7) calendar days of any change.

This information collection is subject to the PRA. A Federal agency generally cannot conduct or sponsor a collection of information, and the public is generally not required to respond to an information collection, unless it is approved by the OMB under the PRA and displays a currently valid OMB Control Number. In addition, notwithstanding any other provisions of law, no person shall generally be subject to penalty for failing to comply with a collection of information that does not display a valid Control Number. *See* 5 CFR 1320.5(a) and 1320.6. The DOL obtains OMB approval for this information collection under Control Number 1219–0124.

OMB authorization for an ICR cannot be for more than three (3) years without renewal, and the current approval for this collection is scheduled to expire on January 31, 2014. The DOL seeks to extend PRA authorization for this information collection for three (3) more years, without any change to existing requirements. The DOL notes that existing information collection requirements submitted to the OMB receive a month-to-month extension while they undergo review. For additional substantive information about this ICR, see the related notice published in the **Federal Register** on September 3, 2013 (77 FR 54279).

Interested parties are encouraged to send comments to the OMB, Office of Information and Regulatory Affairs at the address shown in the **ADDRESSES** section within 30 days of publication of this notice in the **Federal Register.** In order to help ensure appropriate consideration, comments should mention OMB Control Number 1219–0124. The OMB is particularly interested in comments that:

- Evaluate whether the proposed collection of information is necessary for the proper performance of the functions of the agency, including whether the information will have practical utility;
- Evaluate the accuracy of the agency's estimate of the burden of the proposed collection of information, including the validity of the methodology and assumptions used;
- Enhance the quality, utility, and clarity of the information to be collected; and
- Minimize the burden of the collection of information on those who are to respond, including through the use of appropriate automated, electronic, mechanical, or other technological collection techniques or other forms of information technology, e.g., permitting electronic submission of responses.

Agency: DOL–MSHA.

Title of Collection: Health Standards for Diesel Particulate Matter Exposure in Underground Coal Mines.

OMB Control Number: 1219–0124.

Affected Public: Private Sector—businesses or other for-profits.

Total Estimated Number of Respondents: 206.

Total Estimated Number of Responses: 53,631.

Total Estimated Annual Burden Hours: 703.

Total Estimated Annual Other Costs Burden: $9.

Dated: January 22, 2014.

Michel Smyth,

Departmental Clearance Officer.

[FR Doc. 2014–01558 Filed 1–27–14; 8:45 am]

BILLING CODE 4510–43–P

DEPARTMENT OF LABOR

Office of the Secretary

Agency Information Collection Activities; Submission for OMB Review; Comment Request; Current Population Survey—Basic Labor Force

ACTION: Notice.

SUMMARY: The Department of Labor (DOL) is submitting the Bureau of Labor Statistics (BLS) sponsored information collection request (ICR) revision titled, ''Current Population Survey—Basic Labor Force,'' to the Office of Management and Budget (OMB) for review and approval for use in accordance with the Paperwork Reduction Act (PRA) of 1995 (44 U.S.C. 3501 *et seq.*).

DATES: Submit comments on or before February 27, 2014.

ADDRESSES: A copy of this ICR with applicable supporting documentation; including a description of the likely respondents, proposed frequency of response, and estimated total burden may be obtained free of charge from the RegInfo.gov Web site at *http://www.reginfo.gov/public/do/PRAViewICR?ref_nbr=201309-1220-001* (this link will only become active on the day following publication of this notice) or by contacting Michel Smyth by telephone at 202–693–4129, TTY 202–693–8064, (these are not toll-free numbers) or sending an email to *DOL_PRA_PUBLIC@dol.gov.*

Submit comments about this request by mail or courier to the Office of Information and Regulatory Affairs, Attn: OMB Desk Officer for DOL–BLS, Office of Management and Budget, Room 10235, 725 17th Street NW., Washington, DC 20503; by Fax: 202–395–6881 (this is not a toll-free number); or by email: *OIRA_submission@omb.eop.gov.* Commenters are encouraged, but not required, to send a courtesy copy of any comments by mail or courier to the U.S. Department of Labor–OASAM, Office of the Chief Information Officer, Attn: Departmental Information Compliance Management Program, Room N1301, 200 Constitution Avenue NW., Washington, DC 20210; or by email: *DOL_PRA_PUBLIC@dol.gov.*

FOR FURTHER INFORMATION: Contact Michel Smyth by telephone at 202–693–4129, TTY 202–693–8064, (these are not toll-free numbers) or sending an email to *DOL_PRA_PUBLIC@dol.gov.*

Authority: 44 U.S.C. 3507(a)(1)(D).

SUPPLEMENTARY INFORMATION: This ICR seeks to revise the Current Population Survey—Basic Labor Force information collection. The labor force data collected in the Current Population Survey (CPS) help to determine the employment situation of specific population groups as well as general trends in employment and unemployment. The survey is the only source of monthly data on total employment and unemployment. The *Employment Situation* report contains data from this survey and is designated a Principle Federal Economic Indicator; moreover, the survey also yields data on the basic status and characteristics of persons not in the labor force. CPS data are used monthly, in conjunction with data from other sources, to analyze the extent to which, and with what success, the various components of the American population are participating in the economic life of the nation. This ICR has been classified as a revision, because the CPS sample has been redesigned based on information from the 2010 decennial census, in accordance with usual practice.

This information collection is subject to the PRA. A Federal agency generally cannot conduct or sponsor a collection of information, and the public is generally not required to respond to an information collection, unless it is approved by the OMB under the PRA and displays a currently valid OMB Control Number. In addition, notwithstanding any other provisions of law, no person shall generally be subject to penalty for failing to comply with a collection of information that does not display a valid Control Number. *See* 5 CFR 1320.5(a) and 1320.6. The DOL obtains OMB approval for this information collection under Control Number 1220–0100. The current approval is scheduled to expire on June 30, 2014; however, the DOL notes that existing information collection requirements submitted to the OMB receive a month-to-month extension while they undergo review. New requirements would only take effect upon OMB approval. For additional substantive information about this ICR, see the related notice published in the **Federal Register** on October 4, 2013 (77 FR 61868).

Interested parties are encouraged to send comments to the OMB, Office of Information and Regulatory Affairs at the address shown in the **ADDRESSES** section within 30 days of publication of this notice in the **Federal Register**. In order to help ensure appropriate consideration, comments should mention OMB Control Number 1220–0100. The OMB is particularly interested in comments that:

- Evaluate whether the proposed collection of information is necessary for the proper performance of the functions of the agency, including whether the information will have practical utility;
- Evaluate the accuracy of the agency's estimate of the burden of the proposed collection of information, including the validity of the methodology and assumptions used;
- Enhance the quality, utility, and clarity of the information to be collected; and
- Minimize the burden of the collection of information on those who are to respond, including through the use of appropriate automated, electronic, mechanical, or other technological collection techniques or other forms of information technology, e.g., permitting electronic submission of responses.

Agency: DOL–BLS.

Title of Collection: Current Population Survey—Basic Labor Force.

OMB Control Number: 1220–0100.

Affected Public: Individuals or households.

Total Estimated Number of Respondents: 55,000.

Total Estimated Number of Responses: 660,000.

Total Estimated Annual Burden Hours: 82,500.

Total Estimated Annual Other Costs Burden: $0.

Dated: January 22, 2014.

Michel Smyth,

Departmental Clearance Officer.

[FR Doc. 2014–01548 Filed 1–27–14; 8:45 am]

BILLING CODE 4510–24–P

DEPARTMENT OF LABOR

Employment and Training Administration

Notice of Availability of Funds and Solicitation for Grant Applications for the Workforce Data Quality Initiative

AGENCY: Employment and Training Administration, Labor.

ACTION: Notice of Solicitation for Grant Applications (SGA).

Funding Opportunity Number: SGA/DFA PY–13–05

SUMMARY: The Employment and Training Administration (ETA), U.S. Department of Labor, announces the availability of approximately $6 million for grants to State Workforce Agencies (SWA) to develop the Workforce Data Quality Initiative (WDQI).

Grants awarded will provide SWAs the opportunity to develop or expand State workforce longitudinal administrative data systems. These State longitudinal data systems will, at a minimum, include information on programs that provide training, employment services, and unemployment insurance; connect with education data contained in Statewide Longitudinal Data Systems (SLDS) databases; be linked longitudinally at the individual level to allow for enhanced opportunity for evaluation of federally and State-supported education and workforce programs; be capable of generating workforce training provider performance information and outcomes in a standardized, easy to understand format (e.g. scorecards), consistent with all applicable Federal and State privacy laws; and lead to better information for customers and stakeholders of the workforce system. Where such longitudinal systems do not exist or are in early development, WDQI grant assistance may be used to design and develop these systems. WDQI grant assistance can also be used to improve upon existing State longitudinal systems. Current WDQI grant recipients who did not receive a Round III award under solicitation SGA–DFA PY–12–07 and states that currently do not have a WDQI grant are eligible for this competition.

The complete SGA and any subsequent SGA amendments in connection with this solicitation are described in further detail on ETA's Web site at *http://www.doleta.gov/grants/* or on *http://www.grants.gov.* The Web sites provide application information, eligibility requirements, review and selection procedures, and other program requirements governing this solicitation.

DATES: The closing date for receipt of applications under this announcement is March 25, 2014. Applications must be received no later than 4:00:00 p.m. Eastern Time.

FOR FURTHER INFORMATION CONTACT: Linda Forman, 200 Constitution Avenue NW., Room N–4716, Washington, DC 20210; Telephone: 202–693–3416.

Signed January 16, 2014 in Washington, DC.

Eric D. Luetkenhaus

Grant Officer, Employment and Training Administration.

[FR Doc. 2014–01551 Filed 1–27–14; 8:45 am]

BILLING CODE 4510–FN–P

DEPARTMENT OF LABOR

Employment and Training Administration

[TA–W–83,154]

Polyone Designed Structures and Solutions LLC, a Subsidiary of Polyone Corporation, Donora, Pennsylvania; Notice of Affirmative Determination Regarding Application for Reconsideration

By application dated December 2, 2013, Teamsters Local No. 205 requested administrative reconsideration of the negative determination regarding workers' eligibility to apply for Trade Adjustment Assistance (TAA) applicable to workers and former workers of Polyone Designed Structures and Solutions LLC, a subsidiary of Polyone Corporation, Donora, Pennsylvania (subject firm). The determination was issued on November 5, 2013. The Department's Notice of determination was published in the **Federal Register** on November 26, 2013 (78 FR 70581–70583). Workers at the subject firm were engaged in activities related to the production of color additives and inks.

The negative determination was based on the Department's findings that with respect to Section 222(a)(2)(A)(ii) of the Act, imports of articles like or directly competitive with color additives and inks have not increased in 2011, 2012 or during the period of January through September 2013.

With respect to Section 222(a)(2)(B) of the Act, the investigation revealed that the firm has not shifted the production of articles like or directly competitive with color additives and inks to a foreign country or acquired like or directly competitive articles from a foreign country. Rather, the investigation confirmed that production is being shifted from the Donora, Pennsylvania facility to other facilities within the United States.

With respect to Section 222(b)(2) of the Act, the investigation revealed that the firm is not a Supplier or Downstream Producer to a firm that employed a group of workers who received a certification of eligibility under Section 222(a) of the Act, 19 U.S.C. 2272(a).

Finally, the group eligibility requirements under Section 222(e) of the Act have not been satisfied because the workers' firm has not been publicly identified by name by the International Trade Commission as a member of a domestic industry in an investigation resulting in an affirmative finding of serious injury, market disruption, or material injury, or threat thereof.

The request for reconsideration alleges that there is ''additional evidence of the anticipated shift/transfer of equipment and operations to a foreign country''. The request for reconsideration also alleges that production has shifted to Mexico and China. The request for reconsideration also includes additional attachments, including documentation of products that are allegedly produced in Mexico.

The Department has carefully reviewed the request for reconsideration and the existing record, and will conduct further investigation to determine if the workers meet the eligibility requirements of the Trade Act of 1974, as amended.

Conclusion

After careful review of the application, I conclude that the claim is of sufficient weight to justify reconsideration of the U.S. Department of Labor's prior decision. The application is, therefore, granted.

Signed at Washington, DC, this 10th day of January, 2014.

Michael W. Jaffe,

Certifying Officer, Office of Trade Adjustment Assistance.

[FR Doc. 2014–01541 Filed 1–27–14; 8:45 am]

BILLING CODE 4510–FN–P

DEPARTMENT OF LABOR

Employment and Training Administration

[TA–W–83,094]

Caterpillar Reman Powertrain Services, Inc., a Subsidiary of Caterpillar, Inc., Including On-Site Leased Workers From Robert Half/Accountemps, Aerotek, Phillips Staffing, Hagemeyer and ATS, Inc., Summerville, South Carolina; Amended Certification Regarding Eligibility To Apply for Worker Adjustment Assistance

In accordance with Section 223 of the Trade Act of 1974, as amended (''Act''), 19 U.S.C. 2273, the Department of Labor issued a Certification of Eligibility to Apply for Worker Adjustment Assistance on October 29, 2013, applicable to workers of Caterpillar Reman Powertrain Services, Inc., a

subsidiary of Caterpillar, Inc., including on-site leased workers from AccountTemps, Aerotek, Phillips Staffing, Hagemeyer and ATS, Inc., Summerville, South Carolina. The workers are engaged in activities related to remanufactured automotive and hydraulic parts. The notice was published in the **Federal Register** on November 21, 2013 (78 FR 69882).

At the request of the State, the Department reviewed the certification for workers of the subject firm. New information from the company shows that a worker leased from Robert Half/AccounTemps was employed on-site at the Summerville, South Carolina location of Caterpillar Reman Powertrain Services, Inc., a subsidiary of Caterpillar, Inc. The Department has determined that this worker was sufficiently under the control of Salter Labs to be considered a leased worker.

The intent of the Department's certification is to include all workers of the subject firm who were adversely affected by a shift in the production of remanufactured automotive and hydraulic parts to a foreign country. Based on these findings, the Department is amending this certification to include workers leased from Robert Half/AccounTemps working on-site at the Summerville, South Carolina location of the subject firm.

The amended notice applicable to TA–W–83,094 is hereby issued as follows:

All workers from Caterpillar Reman Powertrain Services, Inc., a subsidiary of Caterpillar, Inc., including on-site leased workers from Robert Half/AccounTemps, Aerotek, Phillips Staffing, Hagemeyer and ATS, Inc., Summerville, South Carolina, who became totally or partially separated from employment on or after September 17, 2012, through October 29, 2015, and all workers in the group threatened with total or partial separation from employment on date of certification through two years from the date of certification, are eligible to apply for adjustment assistance under Chapter 2 of Title II of the Trade Act of 1974, as amended.

Signed at Washington, DC, this 14th day of January 2014.

Michael W. Jaffe,

Certifying Officer, Office of Trade Adjustment Assistance.

[FR Doc. 2014–01540 Filed 1–27–14; 8:45 am]

BILLING CODE 4510–FN–P

DEPARTMENT OF LABOR

Employment and Training Administration

[TA–W–81,688; TA–W–81,688B]

Osram Sylvania, Inc., General Lighting Formerly Known As Consumer Lighting Division, Including On-Site Leased Workers From Superior Technical Resources, St. Marys, Pennsylvania; Osram Sylvania, Including On-Site Leased Workers From Manpower and Superior Tech Services, York, Pennsylvania; Amended Certification Regarding Eligibility To Apply for Worker Adjustment Assistance

In accordance with Section 223 of the Trade Act of 1974, as amended (''Act''), 19 U.S.C. 2273, the Department of Labor issued a Certification of Eligibility to Apply for Worker Adjustment Assistance on July 9, 2012, applicable to workers of OSRAM SYLVANIA INC., General Lighting, formerly known as the Consumer Lighting division, including on-site leased workers from Superior Technical Resources, St. Marys, Pennsylvania (TA–W–81,688) and on-site leased workers from W&W and Sons Contractors, Inc. (TA–W–81,688A). The workers are engaged in activities related to the production of incandescent, halogen, and Light-Emitting Diodes (LED) light bulbs. The notice was published in the **Federal Register** on July 30, 2012 (77 FR 146).

Workers of OSRAM SYLVANIA INC., General Lighting, formerly known as the Consumer Lighting division, St. Marys, Pennsylvania were certified under petition number TA–W–71,711 that expired on October 1, 2011. The on-site leased workers from W&W and Sons Contractors, Inc. were not covered by that earlier certification.

At the request of the company official, the Department reviewed the certification for workers of the subject firm. New information from the company shows that workers of OSRAM SYLVANIA, including on-site leased workers from Manpower and Superior Tech Services, York, Pennsylvania were separated due to the same increased imports that led to separations at the St. Marys, Pennsylvania facility.

The intent of the Department's certification is to include all workers of the subject firm who were adversely affected by increased customer imports.

Based on these findings, the Department is amending this certification to include all workers of OSRAM SYLVANIA, including on-site leased workers from Manpower and Superior Tech Services, York, Pennsylvania.

The amended notice applicable to TA–W–81,688 is hereby issued as follows:

''All workers of OSRAM SYLVANIA INC., General Lighting, formerly known as the Consumer Lighting division, including on-site leased workers from Technical Superior Resources, St. Marys, Pennsylvania (TA–W–81,688) who became totally or partially separated from employment on or after October 2, 2011 through July 9, 2014, and all workers in the group threatened with total or partial separation from employment on July 9, 2012 through July 9, 2014 are eligible to apply for adjustment assistance under Chapter 2 of Title II of the Trade Act of 1974, as amended,

AND

All leased workers from W&W and Sons Contractors, Inc., working on-site at OSRAM SYLVANIA INC., General Lighting, formerly known as the Consumer Lighting division, St. Marys, Pennsylvania (TA–W–81,688A), and all workers of OSRAM SYLVANIA, including on-site leased workers from Manpower and Superior Tech Services, York, Pennsylvania (TA–W–81,688B) who became totally or partially separated from employment on or after June 5, 2011 through July 9, 2014, and all workers in the group threatened with total or partial separation from employment on July 9, 2012 through July 9, 2014, are eligible to apply for adjustment assistance under Chapter 2 of Title II of the Trade Act of 1974, as amended.''

Signed at Washington, DC, this 14th day of January 2014.

Michael W. Jaffe,

Certifying Officer, Office of Trade Adjustment Assistance.

[FR Doc. 2014–01539 Filed 1–27–14; 8:45 am]

BILLING CODE 4510–FN–P

DEPARTMENT OF LABOR

Employment and Training Administration

[TA–W–83,094]

Caterpillar Reman Powertrain Services, Inc., a Subsidiary of Caterpillar, Inc., Including On-Site Leased Workers From Robert Half/Accountemps, Aerotek, Phillips Staffing, Hagemeyer and ATS, Inc., Summerville, South Carolina; Amended Certification Regarding Eligibility To Apply for Worker Adjustment Assistance

In accordance with Section 223 of the Trade Act of 1974, as amended (''Act''), 19 U.S.C. 2273, the Department of Labor issued a Certification of Eligibility to Apply for Worker Adjustment Assistance on October 29, 2013, applicable to workers of Caterpillar Reman Powertrain Services, Inc., a subsidiary of Caterpillar, Inc., including

on-site leased workers from AccountTemps, Aerotek, Phillips Staffing, Hagemeyer and ATS, Inc., Summerville, South Carolina. The workers are engaged in activities related to remanufactured automotive and hydraulic parts. The notice was published in the **Federal Register** on November 21, 2013 (78 FR 69882).

At the request of the State, the Department reviewed the certification for workers of the subject firm. New information from the company shows that workers leased from Robert Half/AccounTemps were employed on-site at the Summerville, South Carolina location of Caterpillar Reman Powertrain Services, Inc., a subsidiary of Caterpillar, Inc. The Department has determined that these workers were sufficiently under the control of Caterpillar Reman Powertrain Services, Inc., a subsidiary of Caterpillar, Inc. to be considered leased workers.

The intent of the Department's certification is to include all workers of the subject firm who were adversely affected by a shift in the production of remanufactured automotive and hydraulic parts to a foreign country.

Based on these findings, the Department is amending this certification to include workers leased from Robert Half/AccounTemps working on-site at the Summerville, South Carolina location of the subject firm.

The amended notice applicable to TA–W–83,094 is hereby issued as follows:

All workers from Caterpillar Reman Powertrain Services, Inc., a subsidiary of Caterpillar, Inc., including on-site leased workers from Robert Half/AccounTemps, Aerotek, Phillips Staffing, Hagemeyer and ATS, Inc., Summerville, South Carolina, who became totally or partially separated from employment on or after September 17, 2012, through October 29, 2015, and all workers in the group threatened with total or partial separation from employment on date of certification through two years from the date of certification, are eligible to apply for adjustment assistance under Chapter 2 of Title II of the Trade Act of 1974, as amended.

Signed at Washington, DC, this 14th day of January 2014.

Michael W. Jaffe,

Certifying Officer, Office of Trade Adjustment Assistance.

[FR Doc. 2014–01543 Filed 1–27–14; 8:45 am]

BILLING CODE 4510–FN–P

DEPARTMENT OF LABOR

Employment and Training Administration

[TA–W–82,750]

Boise White Paper, LLC; a Subsidiary of Boise, Inc.; Including Workers Whose Unemployment Insurance (UI) Wages are Reported Through MDW Railroad, Including On-Site Leased Workers From Bartlett & Associates International Falls, Minnesota; Amended Certification Regarding Eligibility To Apply for Worker Adjustment Assistance

In accordance with Section 223 of the Trade Act of 1974, as amended (''Act''), 19 U.S.C. 2273, the Department of Labor issued a Certification of Eligibility to Apply for Worker Adjustment Assistance on July 3, 2013, applicable to workers of Boise White Paper, LLC, a subsidiary of Boise, Inc., including on-site leased workers from Bartlett & Associates, International Falls, Minnesota. The workers are engaged in activities related to the production of paper (uncoated and coated free sheet). The notice was published in the **Federal Register** on August 8, 2013 (78 FR 48470).

At the request of Minnesota State, the Department reviewed the certification for workers of the subject firm. New information from the company shows that some workers separated from employment at the International Falls, Minnesota location of Boise White Paper, LLC, a subsidiary of Boise, Inc. had their wages reported through a separate unemployment insurance (UI) tax account under the name MDW Railroad.

Accordingly, the Department is amending this certification to include workers of the subject firm whose unemployment insurance (UI) wages are reported through MDW Railroad.

The intent of the Department's certification is to include all workers of the subject firm who were adversely affected by increased imports of paper.

The amended notice applicable to TA–W–82,750 is hereby issued as follows:

All workers of Boise White Paper, LLC, a subsidiary of Boise, Inc., including workers whose unemployment insurance (UI) wages are reported through MDW Railroad, including on-site leased workers from Bartlett & Associates, International Falls, Minnesota, who became totally or partially separated from employment on or after May 17, 2012, through July 3, 2015, and all workers in the group threatened with total or partial separation from employment on date of certification through two years from the date of certification, are eligible to apply for adjustment assistance under Chapter 2 of Title II of the Trade Act of 1974, as amended.

Signed at Washington, DC, this 15th day of January 2014.

Michel W. Jaffe,

Certifying Officer, Office of Trade Adjustment Assistance.

[FR Doc. 2014–01542 Filed 1–27–14; 8:45 am]

BILLING CODE 4510–FN–P

DEPARTMENT OF LABOR

Employment and Training Administration

Notice of Determinations Regarding Eligibility To Apply for Worker Adjustment Assistance

In accordance with Section 223 of the Trade Act of 1974, as amended (19 U.S.C. 2273) the Department of Labor herein presents summaries of determinations regarding eligibility to apply for trade adjustment assistance for workers by (TA–W) number issued during the period of January 6, 2014 through January 14, 2014.

In order for an affirmative determination to be made for workers of a primary firm and a certification issued regarding eligibility to apply for worker adjustment assistance, each of the group eligibility requirements of Section 222(a) of the Act must be met.

I. Under Section 222(a)(2)(A), the following must be satisfied:

(1) A significant number or proportion of the workers in such workers' firm have become totally or partially separated, or are threatened to become totally or partially separated;

(2) The sales or production, or both, of such firm have decreased absolutely; and

(3) One of the following must be satisfied:

(A) Imports of articles or services like or directly competitive with articles produced or services supplied by such firm have increased;

(B) Imports of articles like or directly competitive with articles into which one or more component parts produced by such firm are directly incorporated, have increased;

(C) Imports of articles directly incorporating one or more component parts produced outside the United States that are like or directly competitive with imports of articles incorporating one or more component parts produced by such firm have increased;

(D) Imports of articles like or directly competitive with articles which are produced directly using services supplied by such firm, have increased; and

(4) The increase in imports contributed importantly to such workers' separation or threat of separation and to the decline in the sales or production of such firm; or

II. Section 222(a)(2)(B) all of the following must be satisfied:

(1) A significant number or proportion of the workers in such workers' firm have become totally or partially separated, or are threatened to become totally or partially separated;

(2) One of the following must be satisfied:

(A) There has been a shift by the workers' firm to a foreign country in the production of articles or supply of services like or directly competitive with those produced/supplied by the workers' firm;

(B) There has been an acquisition from a foreign country by the workers' firm of articles/services that are like or directly competitive with those produced/supplied by the workers' firm; and

(3) The shift/acquisition contributed importantly to the workers' separation or threat of separation.

In order for an affirmative determination to be made for adversely affected workers in public agencies and a certification issued regarding eligibility to apply for worker adjustment assistance, each of the group eligibility requirements of Section 222(b) of the Act must be met.

(1) A significant number or proportion of the workers in the public agency have become totally or partially separated, or are threatened to become totally or partially separated;

(2) The public agency has acquired from a foreign country services like or directly competitive with services which are supplied by such agency; and

(3) The acquisition of services contributed importantly to such workers' separation or threat of separation.

In order for an affirmative determination to be made for adversely affected secondary workers of a firm and a certification issued regarding eligibility to apply for worker adjustment assistance, each of the group eligibility requirements of Section 222(c) of the Act must be met.

(1) A significant number or proportion of the workers in the workers' firm have become totally or partially separated, or are threatened to become totally or partially separated;

(2) The workers' firm is a Supplier or Downstream Producer to a firm that employed a group of workers who received a certification of eligibility under Section 222(a) of the Act, and such supply or production is related to the article or service that was the basis for such certification; and

(3) Either—

(A) The workers' firm is a supplier and the component parts it supplied to the firm described in paragraph (2) accounted for at least 20 percent of the production or sales of the workers' firm; or

(B) A loss of business by the workers' firm with the firm described in paragraph (2) contributed importantly to the workers' separation or threat of separation.

In order for an affirmative determination to be made for adversely affected workers in firms identified by the International Trade Commission and a certification issued regarding eligibility to apply for worker adjustment assistance, each of the group eligibility requirements of Section 222(f) of the Act must be met.

(1) The workers' firm is publicly identified by name by the International Trade Commission as a member of a domestic industry in an investigation resulting in—

(A) An affirmative determination of serious injury or threat thereof under section 202(b)(1);

(B) An affirmative determination of market disruption or threat thereof under section 421(b)(1); or

(C) An affirmative final determination of material injury or threat thereof under section 705(b)(1)(A) or 735(b)(1)(A) of the Tariff Act of 1930 (19 U.S.C. 1671d(b)(1)(A) and 1673d(b)(1)(A));

(2) The petition is filed during the 1-year period beginning on the date on which—

(A) A summary of the report submitted to the President by the International Trade Commission under section 202(f)(1) with respect to the affirmative determination described in paragraph (1)(A) is published in the **Federal Register** under section 202(f)(3); or

(B) Notice of an affirmative determination described in subparagraph (1) is published in the **Federal Register**; and

(3) The workers have become totally or partially separated from the workers' firm within—

(A) The 1-year period described in paragraph (2); or

(B) Notwithstanding section 223(b)(1), the 1-year period preceding the 1-year period described in paragraph (2).

Affirmative Determinations for Worker Adjustment Assistance

The following certifications have been issued. The date following the company name and location of each determination references the impact date for all workers of such determination.

The following certifications have been issued. The requirements of Section 222(a)(2)(A) (increased imports) of the Trade Act have been met.

TA–W No.	Subject firm	Location	Impact date
83,232	Glen Oak Lumber & Milling, Inc.	Montello, WI	November 20, 2012.
83,295	Lincoln Paper and Tissue LLC	Lincoln, ME	December 16, 2012.

The following certifications have been issued. The requirements of Section 222(a)(2)(B) (shift in production or services) of the Trade Act have been met.

TA–W No.	Subject firm	Location	Impact date
83,128	Catalyst Paper (Snowflake) Inc., Catalyst Paper Holdings Inc	Snowflake, AZ	October 1, 2012.
83,157	Eaton, U.S., Inc., Bussman Division, McCain Employment, etc	Goldsboro, NC	December 10, 2013.
83,157A	Leased Workers from Adecco, Working on-Site at Eaton	Goldsboro, NC	October 20, 2012.
83,216	NTT Data, Inc., Information Technology Consulting Group	North Syracuse, NY	November 12, 2012.
83,235	QBE Americas, Inc., QBE Holdings, Inc., Travel Department	Sun Prairie, WI	November 21, 2012.
83,252	Congoleum Corporation	Trenton, NJ	November 30, 2012.
83,252A	Congoleum Corporation	Mercerville, NJ	November 30, 2012.

TA–W No.	Subject firm	Location	Impact date
83,254	Brady Worldwide, Inc. d/b/a Electromark, Inc., Brady Corporation, Randstad and Adecco.	Wolcott, NY	November 18, 2012.
83,258	Apex Tool Group—Dallas Operations, Bain Capital, Employee Solutions and Aerotek.	Garland, TX	December 3, 2012.
83,261	Commercial Operations, Personal Printing Systems Division, Hewlett-Packard Company, etc.	Omaha, NE	December 2, 2012.
83,268	Magnetics Division of Spang & Company, Magnetics Division, Spang & Company.	East Butler, PA	October 13, 2013.
83,268A	Magnetics Division of Spang & Company, Magnetics Division, Spang & Company.	Pittsburgh, PA	October 13, 2013.
83,271	ShoeDazzle, JustFabulous, ADP Totalsource, Act 1 Personnel Services and Techead.	Los Angeles, CA	December 5, 2012.
83,281	Weyerhaeuser NR Company, Propagation of High Value Trees (PHVT) Unit, Volt.	Federal Way, WA	December 6, 2012.
83,282	Econolite Control Products, Inc., Econolite Group, Inc.	Anaheim, CA	December 10, 2012.
83,284	Navex Global, Inc., Formerly "ELT, Inc."	San Francisco, CA	December 4, 2012.
83,289	Distinctive Industries, Roadwide, Inc., Employment Service Agency	Santa Fe Springs, CA	December 11, 2012.
83,291	The Fabri-Form Company, Engineered Components Division,The Penda Form Company, Manpower, etc.	Pekin, IN	December 13, 2012.
83,294	Benteler Automotive, Manpower	Grand Rapids, MI	December 11, 2012.
83,305	Merastar, Kemper Preferred Division	Dewitt, NY	December 13, 2012.

The following certifications have been issued. The requirements of Section 222(c) (supplier to a firm whose workers are certified eligible to apply for TAA) of the Trade Act have been met.

TA–W No.	Subject firm	Location	Impact date
83,266	WW Metal Fab, WW Group, Inc., Aerotek	Milwaukee, OR	November 26, 2012.

The following certifications have been issued. The requirements of Section 222(c) (downstream producer for a firm whose workers are certified eligible to apply for TAA) of the Trade Act have been met.

TA–W No.	Subject firm	Location	Impact date
83,190	Rockwell Collins, Inc., Service Solutions Organization, Dallas Service Center, Allegis Group.	Irving, TX	October 31, 2012.

Negative Determinations for Worker Adjustment Assistance

In the following cases, the investigation revealed that the eligibility criteria for worker adjustment assistance have not been met for the reasons specified.

The investigation revealed that the criterion under paragraph (a)(1), or (b)(1), or (c)(1)(employment decline or threat of separation) of section 222 has not been met.

TA–W No.	Subject firm	Location	Impact date
83,223	CDS Publications—San Diego, Consolidated Graphics	Vista, CA.	
83,226	American Express Travel Related Services Company Inc., World Service-Service Networking Engineering, American Express, etc.	Salt Lake City, UT.	
83,283	IMPCO Technologies, Inc., Fuel Systems Solutions, Inc	Sterling Heights, MI.	

Determinations Terminating Investigations of Petitions for Worker Adjustment Assistance

After notice of the petitions was published in the **Federal Register** and on the Department's Web site, as required by Section 221 of the Act (19 U.S.C. 2271), the Department initiated investigations of these petitions.

The following determinations terminating investigations were issued because the petitioner has requested that the petition be withdrawn.

TA–W No.	Subject firm	Location	Impact date
83,181	Kloeckner Metals	Bensalem, PA.	
83,307	Veeco Instrument Inc.	Plainview, NY.	
83,307A	Veeco Instrument Inc. (MOCVD Systems)	Somerset, NJ.	

The following determinations terminating investigations were issued in cases where these petitions were not filed in accordance with the requirements of 29 CFR 90.11. Every petition filed by workers must be signed by at least three individuals of the petitioning worker group. Petitioners separated more than one year prior to the date of the petition cannot be covered under a certification of a petition under Section 223(b), and therefore, may not be part of a petitioning worker group. For one or more of these reasons, these petitions were deemed invalid.

TA–W No.	Subject firm	Location	Impact date
83,352	Abt Associates, Inc.	Bethesda, MD.	

The following determinations terminating investigations were issued because the petitioning groups of workers are covered by active certifications. Consequently, further investigation in these cases would serve no purpose since the petitioning group of workers cannot be covered by more than one certification at a time.

TA–W No.	Subject firm	Location	Impact date
83,262	OSRAM Sylvania, Manpower and Superior Tech Services	York, PA.	

I hereby certify that the aforementioned determinations were issued during the period of *January 6, 2014 through January 14, 2014.* These determinations are available on the Department's Web site tradeact/taa/taa_search_form.cfm under the searchable listing of determinations or by calling the Office of Trade Adjustment Assistance toll free at 888–365–6822.

Signed at Washington, DC, this 16th day of January 2014.

Michael W. Jaffe,

Certifying Officer, Office of Trade Adjustment Assistance.

[FR Doc. 2014–01538 Filed 1–27–14; 8:45 am]

BILLING CODE 4510–FN–P

DEPARTMENT OF LABOR

Employment and Training Administration

Investigations Regarding Eligibility To Apply for Worker Adjustment Assistance

Petitions have been filed with the Secretary of Labor under Section 221 (a) of the Trade Act of 1974 (''the Act'') and are identified in the appendix to this notice. Upon receipt of these petitions, the Director of the Office of Trade Adjustment Assistance, Employment and Training Administration, has instituted investigations pursuant to section 221(a) of the Act.

The purpose of each of the investigations is to determine whether the workers are eligible to apply for adjustment assistance under title II, chapter 2, of the Act. The investigations will further relate, as appropriate, to the determination of the date on which total or partial separations began or threatened to begin and the subdivision of the firm involved.

The petitioners or any other persons showing a substantial interest in the subject matter of the investigations may request a public hearing, provided such request is filed in writing with the Director, Office of Trade Adjustment Assistance, at the address shown below, not later than February 7, 2014.

Interested persons are invited to submit written comments regarding the subject matter of the investigations to the Director, Office of Trade Adjustment Assistance, at the address shown below, not later than February 7, 2014.

The petitions filed in this case are available for inspection at the Office of the Director, Office of Trade Adjustment Assistance, Employment and Training Administration, U.S. Department of Labor, Room N–5428, 200 Constitution Avenue NW., Washington, DC 20210.

Signed at Washington, DC, this 16th day of January 2014.

Michael W. Jaffe,

Certifying Officer, Office of Trade Adjustment Assistance.

APPENDIX

[10 TAA petitions instituted between 1/6/14 and 1/10/14]

TA–W	Subject firm (petitioners)	Location	Date of institution	Date of petition
85001	Boehringer Ingelheim (Workers)	Petersburg, VA	01/06/14	01/04/14
85002	Lennox Hearth Products (Company)	Union City, TN	01/06/14	01/03/14
85003	Warner Home Video (State/One-Stop)	Burbank, CA	01/06/14	01/03/14
85004	Resorts World Casino (Workers)	Queens, NY	01/07/14	01/06/14
85005	Lynch Technologies, LLC (Company)	Bainbridge, GA	01/08/14	12/31/13
85006	Intel Corporation (Workers)	Rio Rancho, NM	01/08/14	01/07/14
85007	D R Johnson Lumber Co (State/One-Stop)	Riddle, OR	01/09/14	01/08/14
85008	Umpqua Lumber Company (State/One-Stop)	Dillard, OR	01/09/14	01/08/14
85009	Standard And Poors (McGraw Hill Finance) (Workers)	New York, NY	01/09/14	01/08/14
85010	Smithfield (State/One-Stop)	Landover, MD	01/10/14	01/09/14

[FR Doc. 2014–01537 Filed 1–27–14; 8:45 am]
BILLING CODE 4510–FN–P

DEPARTMENT OF LABOR

Veterans' Employment and Training Service

Fiscal Year 2014 Through 2016 Stand Down Grant Requests

AGENCY: Veterans' Employment and Training Service, U.S. Department of Labor.

ACTION: Announcement of funds available under the Homeless Veterans' Reintegration Program to support local Stand Down events in Fiscal Year (FY) 2014, FY 2015 and FY 2016 dependent on funding availability.

Funding Opportunity No: 17.805

SUMMARY: The U.S. Department of Labor (USDOL), Veterans' Employment and Training Service (VETS) supports local Stand Down events that help homeless veterans attain meaningful civilian employment. Authority to support such events is in 38 U.S.C. section 2021, which provides that the ''Secretary of Labor shall conduct, directly or through grant or contract, such programs as the Secretary determines appropriate to provide job training, counseling, and placement services (including job readiness and literacy and skills training) to expedite the reintegration of homeless veterans into the labor force.'' A Stand Down is a local community event where homeless veterans are provided a wide variety of services and incentives. Stand Down funding is provided in the form of non-competitive grants that are awarded on a first-come, first-served basis until available funding is exhausted.

VETS anticipates that approximately $600,000 will be available to award approximately 70 grants in each of the three Federal fiscal years covered by this solicitation. The Federal fiscal year begins on October 1 and ends on September 30 of the next calendar year. Availability of Stand Down grant funding each fiscal year will be dependent upon Federal appropriation. Awards will be made for a maximum of $10,000 per multi-day event, which is up to three days, or $7,000 per one-day event.

VETS is now accepting applications for grant awards to fund Stand Down events in FY 2014. All applications for Stand Down grant funding must be submitted to the appropriate State Director for Veterans' Employment and Training (DVET) no less than 90 days prior to the event. Address and contact information for each state DVET can be found at: *http://www.dol.gov/vets/aboutvets/contacts/map.htm.* Stand Down grant funding is awarded for a specific event on a specific date. Organizations planning Stand Down events must submit a new application each year to request funding and should not assume that the application will be approved.

Stand Down grant awards are contingent upon a Federal appropriation or a continuing resolution each Federal fiscal year. Therefore, applications submitted after July 1 for events to be held after September 30 may be held for consideration contingent upon Federal funding availability during the upcoming fiscal year. Grant applicants cannot obligate grant funding toward Stand Down expenses prior to receiving a Notice of Award from the Grant Officer; any such expenses will be disallowed.

SUPPLEMENTARY INFORMATION:

I. Funding Opportunity Description

''Stand Down'' is a military term referring to an opportunity to achieve a brief respite from combat. Troops assemble in a base camp to receive new clothing, hot food, and a relative degree of safety before returning to the front. Today more than 160 organizations across the country partner with local businesses, government agencies, tribal governments, community, and faith-based service providers to hold Stand Down events in local communities for homeless veterans and their families.

Each year, the Assistant Secretary for Veterans' Employment and Training awards Stand Down grants to assist with the reintegration of homeless veterans into the labor force through programs that enhance employment and training opportunities and promote self-sufficiency. Typically, services available at these events include temporary shelter, showers, haircuts, meals, clothing, hygiene care kits, medical examinations, immunizations, legal advice, state identification cards, veteran benefit information, training program information, employment services, and referral to other supportive services.

Stand Down funding is provided in the form of non-competitive grants that are awarded on a first-come, first-served basis until available funding is exhausted. For the purpose of a Stand Down grant award, applicants must describe a plan that clearly demonstrates how grant funding will be used for homeless veterans only. While both veterans and non-veterans may participate in Stand Down events, grant funding can only be used to purchase items, to include food and meals, for homeless veteran participants. The following minimum services must be available for homeless veteran participants:

- Department of Veterans Affairs (VA)—benefits, medical and mental health services;
- Department of Labor—State Workforce Agency employment and training services to include Disabled Veterans' Outreach Program (DVOP) specialist or other American Job Center staff, where available; and
- Referral services to secure immediate emergency housing.

II. Allowable Costs

Stand Down grant funds must be used to enhance employment and training opportunities or to promote the self-sufficiency of homeless veterans through paid work. Homeless veterans do not always have access to basic hygiene supplies necessary to maintain their health and confidence. Lack of shelter limits their ability to prepare for and present themselves at job interviews or be contacted for follow-up. Basic services such as showers, haircuts, attention to health concerns and other collaborative services provided at a Stand Down can give the homeless veteran a greater sense of self, improving their chances of securing and maintaining employment. Therefore, grant funds may be used to support Stand Down activities such as:

- The purchase of food, bottled water, clothing, sleeping bags, one-person tents, backpacks filled with non-perishable foods, hygiene care kits, and non-prescription reading glasses.
- Vouchers may be purchased for minor time-limited legal services, consumer credit counseling services, food, and gasoline gift cards for homeless veteran participants. The purchase of gift cards for food and/or gas must be restricted to cards that can only be used to purchase food or gas. Federal awards may not be used for the purchase of alcohol or tobacco products; see 2 CFR 200.423. All grantees purchasing gift cards with grant funds will be required to state the measures they will use to comply with this regulation.
- The purchase of job search media such as employment guides or literature in hard copy or on portable storage media, etc.
- Special one-time costs for the duration of the Stand Down event such as rental of facilities and/or tents, electricity, equipment, portable toilets and communications or internet access.

▪ The purchase of janitorial supplies, kitchen supplies, and advertising materials such as event posters. Care should be taken to minimize advertisement costs in order to maximize funding available to purchase items or provide services that immediately and positively impact the veteran in need. Applicants that request funding for advertisement expenses that appear to be unreasonable (i.e. over 20 percent of the total grant award) will be asked to reevaluate and reallocate those funds to ensure the homeless veteran participants benefit.

▪ The hiring of security personnel.

▪ The rental of transportation equipment (bus, van, car, taxi, etc.) to provide transportation of homeless veterans to and from the Stand Down event.

▪ The purchase or rental of other pertinent items and services for homeless veteran participants and their families as deemed appropriate by VETS.

Only expenses incurred during the time frame listed on the Notice of Award will be approved as allowable expenses. Any expenses incurred prior to or after the time frame listed on the Notice of Award will be disapproved.

III. Funding Restrictions

Stand Down grant funds may not be used to pay for administrative costs or administrative and/or programmatic staff. Stand Down grant funds may not be used to purchase clothing items for volunteers, pen sets, military and veteran type patches/medals, memento gifts for staff members, visitors, or volunteers (e.g. t-shirts, hats); pen sets, military and veteran type patches/medals, memento gifts for staff members, visitors, or volunteers, or any other supplementary/replacement item(s) not approved by the DVET. Planned budget expenses must be fully itemized and applicants must provide details for every item in the budget narrative. Any planned expenses listed as ''other'' or ''miscellaneous'' must be clarified and itemized.

Stand Down grant funding cannot be used to pay for health care related expenses. All medical examinations, to include dental and optometry examinations, should be provided by the VA or a community provider. Purchases of prescription eye wear and dental work are considered medical care expenses and are not allowable. Applicants should explore all opportunities to secure health related services through the local VA Medical Center or VA Outpatient Clinic. Non-prescription reading glasses are considered an allowable expense.

VETS reserves the right to disapprove any proposed cost not consistent with the funding restrictions in this announcement.

IV. Award Information

The maximum amount that can be awarded to support a multiple day Stand Down event is $10,000 per applicant per fiscal year. If the event is held for one (1) day, the maximum amount that can be awarded is $7,000. Additional grants can be awarded to the same organization as long as the participants being served are geographically separated. In these cases, the first submission has priority for funding.

V. Eligibility Information

1. Eligible Applicants—The following organizations may apply for grants under this solicitation: state and local Workforce Investment Boards, Veterans Service Organizations, local public agencies, tribal governments, and non-profit organizations including community and faith-based organizations. Organizations registered with the Internal Revenue Service as 501(c)(4) organizations are not eligible to apply for this funding opportunity.

2. Cost Sharing or Matching—Cost sharing and matching funds are not required. However, VETS strongly encourages applicants to leverage other available resources to maximize the services and incentives provided to homeless veteran participants at Stand Down events.

3. Other Eligibility Requirements

A. As of July 2012, all applicants must register with the System for Award Management (SAM) before submitting an application. SAM is a web-enabled government wide application that collects, validates, stores, and disseminates business information about the Federal government's trading partners in support of contract award, grants, and the electronic payment process. Step by Step instructions for registering with SAM can be found at: *http://www.grants.gov/applicants/org_step2.jsp.* A grantee must maintain an active SAM registration with current information at all times during which it has an active Federal award or application under consideration. To remain registered in the SAM database after the initial registration, the applicant is required to review and update its information in the SAM database on an annual basis from the date of initial registration or subsequent updates to ensure it is current, accurate, and complete. Failure to register in SAM before application submission will result in the application being found non-responsive. (Prior to July 2012, this functionality was handled by the Central Contractor Registry.)

B. All applicants for Federal funding are required to include a Dun and Bradstreet Number (DUNS) with their application. Applicants can obtain a DUNS number at: *http://www.dnb.com* or by phone at 1–866–705–5711.

VI. Application Content

To be considered responsive, all applications for Stand Down grant funding must include:

1. An original applicant memorandum requesting Stand Down funds *signed in blue ink.* The applicant letter must include a statement that the individual who signed the SF 424 is authorized to enter into an agreement with the USDOL.

2. Applicants must provide a Program Narrative that clearly states the need for the Stand Down. The narrative must detail the geographical area to be served and the estimated number of homeless veterans to be served. The narrative must explain the role of the DVOP specialist or other American Job Center (AJC) staff and include a timeline for completion of all Stand Down event activities. The timeline must clearly indicate critical dates in the planning, execution, and follow-up process. If applicable, the timeline will demonstrate the need to draw down awarded funding in advance of the event date with the purpose and date of the funding need. Funding will be made available for draw down no earlier than 45 days prior to the event date, or as identified in the timeline. The timeline must include the date the post-event report is due to the DVET (30 days following the end of the Federal fiscal quarter in which the Stand Down was held) as explained in section VIII of this document;

3. An original Standard Form (SF) 424, Application for Federal Assistance, (OMB No. 4040–0004) signed in blue ink. The SF–424 can be downloaded from *www.grants.gov* or at Appendix A as described in section X of this document. NOTE: The Grant Officer will only accept the most current version of the SF 424.

4. A SF 424A, Budget Information—Non-Construction Programs (OMB No. 4040–0006). The SF–424A can be downloaded from *www.grants.gov* or at Appendix B as described in section X of this document.

5. A Budget Narrative—A detailed description of each planned expenditure listed on the SF 424A. The description should describe or indicate the methodology used to determine the cost estimates such as price per quantity, if

the item will be purchased or rented, and whether the items will be utilized by the homeless veteran participants, other homeless participants or assist the volunteer(s) at the event. As a cost category VETS does not accept categories designated *only* as ''Other'' or ''Miscellaneous.'' Budget narratives must clearly itemize all expenditures.

Note: The fair share calculation must be applied for expenditures shared among homeless veteran participants and non-homeless veteran participants.

6. An original signed Assurances and Certifications Signature Page, described at Appendix C in section X of this document.

7. Survey on Ensuring Equal Opportunity for Applicants (OMB No. 1894–0010), described as Appendix D in section X of this document.

8. A copy of the SAM Registration active through date of event.

9. Letters of support, particularly from the local AJC and/or DVOP specialists, VA, Department of Housing and Urban Development or the local Continuum of Care, VSOs, State and local government agencies, local businesses, and local non-profit organizations including community-based and faith-based organizations. Letters clearly stating that the DVOP specialist(s) will actively provide employment services at the Stand Down must be provided.

10. If applicable, a copy of the Internal Revenue Service documentation indicating approval of non-profit status, for example: 501(c)(3), 501(c)(19).

VII. Award Administration Information

Stand Down funding is a non-competitive grant awarded on a first-come, first-served basis until available funding is exhausted for the fiscal year. Funding is subject to approval by the Grant Officer and is dependent upon various factors such as urban, rural and geographic balance, the availability of funds, prior performance and proposals that are most advantageous to the government. If approved, the Grant Officer will notify the grantee through a Notice of Award. Under no circumstances will a Stand Down event be awarded funding after the event has taken place.

Upon award, grantees will receive a Personal Identification Number (PIN) and password for e-Grants, the Federal financial reporting system, from the grant officer. If a grantee does not receive a PIN and password for e-Grants, the grantee must notify the DVET immediately. Access to e-Grants is required in order to comply with Federal financial reporting requirements. The grantee will also receive a financial form to complete in order for the USDOL Office of Financial Management Operations to set-up an account in the Health and Human Services, Payment Management System (HHS/PMS). The grantee must submit the completed form as directed in order to electronically draw down awarded funding. The form should be returned via FedEx, UPS, or other non-U.S. Postal Service provider to avoid processing delays. Questions or problems relating to accessing funding or the electronic draw down process should be referred to the USDOL Office of Financial Management Operations at (202) 693–6871.

After setting up the account, the grantee will be able to draw down funds to reimburse approved expenses incurred after award and to cover approved expenses that will be paid within three (3) days of the draw down. Funds requested for draw down through the HHS/PMS are directly deposited into the designated account within 24 hours of the request.

VIII. Required Post-Event Activities and Reporting

After receiving a grant award, the grantee must complete a Federal Financial Report (SF 425) no later than 30 days after the end of each Federal fiscal quarter (October 30, January 30, April 30 and July 30). Instructions for completing this requirement are provided in the HHS/PMS information packet and are also available at: *http://www.dpm.psc.gov/grant_recipient/ffr_info/ffr_info.aspx?explorer.event=true.*

All grant awarded funds must be drawn down by the grantee within 90 calendar days of the Stand Down. For example, if a Stand Down is held on July 12, 2014 (FY 2014), all funds should be drawn down within 90 days or by October 10, 2014 (FY 2015).

A final SF 425 is due no later than thirty (30) calendar days after the end of the Federal fiscal quarter in which all expended funds have been drawn down. For example, if a Stand Down is held on July 27 and the final drawdown of all expended funds occurs on September 15, the final FFR is due on October 30.

In addition to financial reporting, the grantee is required to submit a post-event report to the DVET at the same time the final SF 425 is completed. The required content of this report will be provided to grantees in the notification of award, which includes the Special Grant Provisions and the grant award letter.

Grantees that anticipate a delay in submitting any SF 425 report or the post-event report should immediately contact the appropriate DVET and provide a justification to request an extension. If VETS disapproves a particular expenditure, and the funds were already drawn down, the grantee will be notified in writing with an explanation for the disapproval and instructions to electronically return the funds to the HHS/PMS account within fifteen (15) calendar days of notification from VETS.

Any failure to comply with the guidance and reporting requirements set forth in the Stand Down Special Grant Provisions provided with the Grant Award letter will be taken into consideration in future funding award decisions by USDOL/VETS.

IX. Agency Contacts

Questions regarding this announcement should be directed to the DVET in your State. Contact information for each DVET is located in the VETS Staff Directory at the following Web page: *http://www.dol.gov/vets/aboutvets/contacts/map.htm.*

X. Other Information

1. Acknowledgement of USDOL Funding

A. Printed Materials/Intellectual Property: In all circumstances, the following must be displayed on printed materials prepared by the grantee while in receipt of USDOL grant funding: ''Preparation of this item was funded by the United States Department of Labor under Grant No. [Insert the appropriate grant number].'' All printed materials must also include the following notice: ''This workforce product was funded by a grant awarded by the U.S. Department of Labor's Veterans' Employment and Training Service. The product was created by the grantee and does not necessarily reflect the official position of the U.S. Department of Labor and/or the Veterans' Employment and Training Service. The U.S. Department of Labor and/or the Veterans' Employment and Training Service makes no guarantees, warranties, or assurances of any kind, expressed or implied, with respect to such information, including any information on linked sites and including, but not limited to, accuracy of the information or its completeness, timeliness, usefulness, adequacy, continued availability, or ownership. This product is copyrighted by the institution that created it. Internal use by an organization and/or personal use by an individual for non-commercial purposes are permissible. All other uses require the prior authorization of the copyright owner.''

B. Public references to grant: When issuing statements, press releases, requests for proposals, bid solicitations, and other documents describing projects or programs funded in whole or in part with Federal money, all grantees receiving Federal funds must clearly state:

- The percentage of the total costs of the program or project that will be financed with Federal money;
- The dollar amount of Federal financial assistance for the project or program; and
- The percentage and dollar amount of the total costs of the project or program that will be financed by non-governmental sources.

C. Use of USDOL Logo: The Grant Officer must approve the use of the USDOL logo. In addition, once approval is given the following guidance is provided:

- The USDOL logo may be applied to USDOL-funded material prepared for distribution, including posters, videos, pamphlets, research documents, national survey results, impact evaluations, best practice reports, and other publications of global interest. The grantee(s) must consult with USDOL on whether the logo may be used on any such items prior to final draft or final preparation for distribution. In no event will the USDOL logo be placed on any item until USDOL has given the grantee permission to use the logo on the item.
- All documents must include the following notice: ''This documentation does not necessarily reflect the views or policies of the U.S. Department of Labor, nor does mention of trade names, commercial products, or organizations imply endorsement by the U.S. Government.''

2. Information Collection

OMB Information Collection No 1225–0086, Expires January 31, 2016. According to the Paperwork Reduction Act of 1995, no persons are required to respond to a collection of information unless such collection displays a valid OMB control number. Public reporting burden for this collection of information is estimated to average twenty (20) hours per response, including time for reviewing instructions, searching existing data sources, gathering and maintaining the data needed, and completing and reviewing the collection of information. Send comments regarding the burden estimated or any other aspect of this collection of information, including suggestions for reducing this burden, to the U.S. Department of Labor, to the attention of Michel Smyth, Departmental Clearance Officer, 200 Constitution Avenue NW., Room N1301, Washington, DC 20210. Comments may also be emailed to *DOL_PRA_PUBLIC@dol.gov.*

This information is being collected for the purpose of awarding a grant. The information collected through this ''Solicitation for Grant Applications'' will be used by the Department of Labor to ensure that grants are awarded to the applicant best suited to perform the functions of the grant. Submission of this information is required in order for the applicant to be considered for award of this grant. Unless otherwise specifically noted in this announcement, information submitted in the respondent's application is *not* considered to be confidential. Please do not send your completed application to the OMB. Send it to the sponsoring agency as specified in this solicitation.

Appendices

Located on the VETS homepage at: *www.dol.gov/vets.* Follow the link for Stand Down Grants and Required Forms under Competitive Grants:

Appendix A: Application for Federal Assistance, SF–424
Appendix B: Budget Information, SF–424A
Appendix C: Assurances and Certifications Signature Page
Appendix D: Survey on Ensuring Equal Opportunity for Applicants

Signed at Washington, DC, this 10th day of January, 2014.

Cassandra Mitchell,

Grant Officer.

[FR Doc. 2014–00755 Filed 1–27–14; 8:45 am]

BILLING CODE 4510–79–P

DEPARTMENT OF LABOR

Wage and Hour Division

RIN 1235–0002

Proposed Extension of the Information Collection Disclosure to Workers Under the Migrant and Seasonal Agricultural Worker Protection Act

AGENCY: Wage and Hour Division, Department of Labor.

ACTION: Notice and request for comments.

SUMMARY: The Department of Labor, as part of its continuing effort to reduce paperwork and respondent burden, conducts a preclearance consultation program to provide the general public and Federal agencies with an opportunity to comment on proposed and/or continuing collections of information in accordance with the Paperwork Reduction Act of 1995 (PRA95). 44 U.S.C. 3056(c)(2)(A). This program helps to ensure that requested data can be provided in the desired format, reporting burden (time and financial resources) is minimized, collection instruments are clearly understood, and the impact of collection requirements on respondents can be properly assessed. Currently, the Wage and Hour Division is soliciting comments concerning its proposal to extend Office of Management and Budget (OMB) approval of the Information Collection: Disclosures to Workers Under the Migrant and Seasonal Agricultural Worker Protection Act. A copy of the proposed information request can be obtained by contacting the office listed below in the **FOR FURTHER INFORMATION CONTACT** section of this Notice.

DATES: Written comments must be submitted to the office listed in the **ADDRESSES** section below on or before March 31, 2014.

ADDRESSES: You may submit comments identified by Control Number 1235–0002, by either one of the following methods: *Email: WHDPRAComments@dol.gov; Mail, Hand Delivery, Courier:* Division of Regulations, Legislation, and Interpretation, Wage and Hour, U.S. Department of Labor, Room S–3502, 200 Constitution Avenue NW., Washington, DC 20210.

Instructions: Please submit one copy of your comments by only one method. All submissions received must include the agency name and Control Number identified above for this information collection. Because we continue to experience delays in receiving mail in the Washington, DC area, commenters are strongly encouraged to transmit their comments electronically via email or to submit them by mail early. Comments, including any personal information provided, become a matter of public record. They will also be summarized and/or included in the request for OMB approval of the information collection request.

FOR FURTHER INFORMATION CONTACT: Mary Ziegler, Director, Division of Regulations, Legislation, and Interpretation, Wage and Hour, U.S. Department of Labor, Room S–3502, 200 Constitution Avenue NW., Washington, DC 20210; telephone: (202) 693–0406 (this is not a toll-free number). Copies of this notice may be obtained in alternative formats (Large Print, Braille, Audio Tape, or Disc), upon request, by calling (202) 693–0023 (not a toll-free number). TTY/TTD callers may dial toll-free (877) 889–5627 to obtain information or request materials in alternative formats.

SUPPLEMENTARY INFORMATION:

I. Background: The Migrant and Seasonal Agricultural Worker Protection Act (MSPA) safeguards migrant and seasonal agricultural workers in their interactions with Farm Labor Contractors, Agricultural Employers and Agricultural Associations, and providers of migrant farm worker housing. *See* Public Law 97–470. The MSPA requires Farm Labor Contractors, Agricultural Employers, and Agricultural Associations, who recruit, solicit, hire, employ, furnish, transport, or house agricultural workers, as well as providers of migrant housing, to meet certain minimum requirements in their dealings with migrant and seasonal agricultural workers. Various sections of the MSPA require respondents (e.g., Farm Labor Contractors, Agricultural Employers, and Agricultural Associations to disclose terms and conditions in writing to their workers. MSPA sections 201(g) and 301(f) requires that the DOL make forms available to provide such information. The DOL prints and makes optional-use form WH–516, Worker Information—Terms and Conditions of Employment.

MSPA sections 201(d) and 301(c)—29 U.S.C. 1821(d), 1831(c) and regulations 29 CFR 500.80(a), require each Farm Labor Contractor, Agricultural Employer, and Agricultural Association that employs a migrant or seasonal worker to make, keep, and preserve records for three years for each such worker concerning the: (1) Basis on which wages are paid; (2) number of piece work units earned, if paid on a piece work basis; (3) number of hours worked; (4) total pay period earnings; (5) specific sums withheld and the purpose of each sum withheld; (6) net pay. Respondents are also required to provide an itemized written statement of this information to each migrant and seasonal agricultural worker each pay period. *See* 29 U.S.C. 1821(d), 1831(c), and 29 CFR 500.1-.80(d). Additionally, MSPA sections 201(e) and 301(d) require each Farm Labor Contractor provide copies of all the records noted above for the migrant and seasonal agricultural workers the contractor has furnished to other Farm Labor Contractors, Agricultural Employers, or Agricultural Associations who use the workers. Respondents must also make and keep certain records. Section 201(c) of the MSPA requires all Farm Labor Contractors, Agricultural Employers, and Agricultural Associations providing housing to a migrant agricultural worker to post in a conspicuous place at the site of the housing, or present to the migrant worker, a written statement of any housing occupancy terms and conditions. *See* 29 U.S.C. 1821(c); 29 CFR 500.75. In addition, MSPA section 201(g) requires them to provide such information in English, or as necessary and reasonable, in a language common to the workers. *See* 29 U.S.C. 1821(g). The provision also requires DOL make the optional forms available to provide the required disclosures. *See* 29 U.S.C. 1821(g); 29 CFR 500.1(i)(2).

II. Review Focus: The Department of Labor is particularly interested in comments which:

- Evaluate whether the proposed collection of information is necessary for the proper performance of the functions of the agency, including whether the information will have practical utility;
- Enhance the quality, utility, and clarity of the information to be collected;
- Evaluate the accuracy of the agency's estimate of the burden of the proposed collection of information, including the validity of the methodology and assumptions used;
- Minimize the burden of the collection of information on those who are to respond, including through the use of appropriate automated, electronic, mechanical, or other technological collection techniques or other forms of information technology, e.g., permitting electronic submissions of responses.

III. Current Actions: The Department of Labor seeks an approval for the extension of this information collection in order to ensure effective administration of various special employment programs.

Type of Review: Extension.

Agency: Wage and Hour Division.

Title: Disclosure to Workers Under the Migrant and Seasonal Agricultural Worker Protection Act

OMB Number: 1235–0002.

Affected Public: Business or other for-profit, Not-for-profit institutions, Farms.

Agency Numbers: Forms WH–501 (English and Spanish versions), WH–516 (English, Spanish and Haitian Creole versions), and WH–521.

Total Respondents: 107,706.

Total Annual Responses: 84,206,505.

Estimated Total Burden Hours: 1,417,594.

Estimated Time per Response: various.

Frequency: On occasion.

Total Burden Cost (capital/startup/operation/maintenance): $3,368,260.

Dated: January 15, 2014.

Mary Ziegler,

Director, Division of Regulations, Legislation, and Interpretation.

[FR Doc. 2014–01547 Filed 1–27–14; 8:45 am]

BILLING CODE 4510–27–P

NATIONAL CREDIT UNION ADMINISTRATION

Agency Information Collection Activities: Submission to OMB for Revision to a Currently Approved Information Collection; Comment Request

AGENCY: National Credit Union Administration (NCUA).

ACTION: Request for comment.

SUMMARY: The NCUA intends to submit the following information collection to the Office of Management and Budget (OMB) for review and clearance under the Paperwork Reduction Act of 1995 (Pub. L. 104–13, 44 U.S.C. Chapter 35). This information collection is published to obtain comments from the public. NCUA is proposing to add fields to the 5300 Call Report to collect Bank Secrecy Act/Anti-Money Laundering, charitable donations, derivatives and investments to fund employee benefits.

DATES: Comments will be accepted until March 31, 2014.

ADDRESSES: Interested parties are invited to submit written comments to the NCUA Contact and the OMB Reviewer listed below:

NCUA Contact: Tracy Crews, National Credit Union Administration, 1775 Duke Street, Alexandria, Virginia 22314–3428, Fax No. 703–837–2861, Email: *OCIOPRA@ncua.gov.*

OMB Reviewer: Office of Management and Budget, ATTN: Desk Officer for the National Credit Union Administration, Office of Information and Regulatory Affairs, Washington, DC 20503.

FOR FURTHER INFORMATION CONTACT: Requests for additional information, a copy of the information collection request, or a copy of submitted comments should be directed to Tracy Crews at the National Credit Union Administration, 1775 Duke Street, Alexandria, VA 22314–3428, or at (703) 518–6444.

SUPPLEMENTARY INFORMATION:

I. Abstract and Request for Comments

NCUA is amending the currently approved collection for 3133–0004. Two specific forms are used, NCUA Form 5300 and NCUA Profile Form 4501A, also known as the Call Report and Profile, respectively. Section 741.6 of the NCUA Rules and Regulations requires all federally insured credit unions to submit a Call Report quarterly. 12 CFR 741.6. The information enables NCUA to monitor credit unions whose share accounts are insured by the National Credit Union Share Insurance Fund (NCUSIF). NCUA uses the information collected from

these Call Reports to fulfill its mission of supervising credit unions, and the Federal Reserve Board uses the information to monitor and control the nation's money supply and the system of financial institutions. Congress and various state legislatures use this information to monitor, regulate, and control credit unions and financial institutions. The changes made to the Profile and Call Report forms for March 2014 will provide data to assist the National Credit Union Administration in assessing regulatory compliance and financial and operational risks. There is a decrease of 8,290 hours from the last submission (2013). The decrease is a result of an adjustment to the number of credit unions completing the Call Report from 6,864 to an estimated 6,550 for March 2014. This decline is from credit union mergers and liquidations.

The NCUA requests that you send your comments on this collection to the location listed in the addresses section. Your comments should address: (a) The necessity of the information collection for the proper performance of NCUA, including whether the information will have practical utility; (b) the accuracy of our estimate of the burden (hours and cost) of the collection of information, including the validity of the methodology and assumptions used; (c) ways we could enhance the quality, utility, and clarity of the information to be collected; and (d) ways we could minimize the burden of the collection of the information on the respondents such as through the use of automated collection techniques or other forms of information technology. It is NCUA's policy to make all comments available to the public for review.

II. Data

Proposal for the following collection of information:

OMB Number: 3133–0004.

Form Number: NCUA 5300 and NCUA 4501A.

Type of Review: Revision to the currently approved collection.

Title: NCUA Call Report and Profile.

Description: The financial and statistical information is essential to NCUA and state supervisory authorities in carrying out its responsibility for the supervision of federally insured credit unions. The information also enables NCUA to monitor all federally insured credit unions whose share accounts are insured by the NCUSIF.

Respondents: All Federally Insured Credit Unions.

Estimated Number of Respondents/Recordkeepers: 6,550

Estimated Burden Hours per Response: 6.6 hours.

Frequency of Response: Quarterly.

Estimated Total Annual Burden Hours: 172,920.

Estimated Total Annual Cost: $5,360,520.

By the National Credit Union Administration Board on January 17, 2014.

Gerard Poliquin,

Secretary of the Board.

[FR Doc. 2014–01514 Filed 1–27–14; 8:45 am]

BILLING CODE 7535–01–P

NUCLEAR REGULATORY COMMISSION

[Docket No. 5200025; NRC–2008–0252]

Inspections, Tests, Analyses, and Acceptance Criteria; Vogtle Unit 3 Combined License

AGENCY: Nuclear Regulatory Commission.

ACTION: Determination of inspections, tests, analyses, and acceptance criteria (ITAAC).

SUMMARY: The U.S. Nuclear Regulatory Commission (NRC) staff has determined that the inspections, tests, and analyses have been successfully completed, and that the specified acceptance criteria are met for ITAAC 3.3.00.09, for the Vogtle Unit 3 Combined License.

ADDRESSES: Please refer to Docket ID NRC–2008–0252 when contacting the NRC about the availability of information regarding this document. You may access publicly-available information related to this document using any of the following methods:

- *Federal Rulemaking Web site:* Go to *http://www.regulations.gov* and search for Docket ID NRC–2008–0252. Address questions about NRC dockets to Carol Gallagher; telephone: 301–287–3422; email: *Carol.Gallagher@nrc.gov.* For technical questions, contact the individuals listed in the **FOR FURTHER INFORMATION CONTACT** section of this document.
- *NRC's Agencywide Documents Access and Management System (ADAMS):* You may access publicly available documents online in the NRC Library at *http://www.nrc.gov/reading-rm/adams.html.* To begin the search, select ''*ADAMS Public Documents*'' and then select ''*Begin Web-based ADAMS Search.*'' For problems with ADAMS, please contact the NRC's Public Document Room (PDR) reference staff at 1–800–397–4209, 301–415–4737, or by email to *pdr.resource@nrc.gov.* The ADAMS accession number for each document referenced in this document (if that document is available in ADAMS) is provided the first time that a document is referenced.
- *NRC's PDR:* You may examine and purchase copies of public documents at the NRC's PDR, Room O1–F21, One White Flint North, 11555 Rockville Pike, Rockville, Maryland 20852.

FOR FURTHER INFORMATION CONTACT: David H. Jaffe, Office of New Reactors, U.S. Nuclear Regulatory Commission, Washington, DC 20555–0001; telephone: 301–415–1439, email: *David.Jaffe@nrc.gov.*

SUPPLEMENTARY INFORMATION:

I. Licensee Notification of Completion of ITAAC

On December 11, 2013, Southern Nuclear Operating Company, Inc. (the licensee) submitted an ITAAC closure notification (ICN) under § 52.99(c)(1) of Title 10 of the *Code of Federal Regulations* (10 CFR) informing the NRC that the licensee has successfully performed the required inspections, tests, and analyses for ITAAC 3.3.00.09, and that the specified acceptance criteria are met for the Vogtle Unit 3 Combined License (ADAMS Accession No. ML13345A275). This ITAAC was approved as part of the issuance of the combined license, NPF–91, for this facility.

II. NRC Staff Determination of Completion of ITAAC

The NRC staff has determined that the inspections, tests, and analyses have been successfully completed, and that the specified acceptance criteria are met for Vogtle Unit 3 Combined License, ITAAC 3.3.00.09. This notice fulfills the staff's obligations under 10 CFR 52.99(e)(1) to publish a notice in the **Federal Register** of the NRC staff's determination of the successful completion of inspections, tests and analyses.

The documentation of the NRC staff's determination is in the ITAAC Closure Verification Evaluation Form (VEF) dated January 8, 2014 (ADAMS Accession No. ML14008A377). The VEF is a form that represents the NRC staff's structured process for reviewing ICNs. The ICN presents a narrative description of how the ITAAC was completed, and the NRC's ICN review process involves a determination on whether, among other things, (1) the ICN provides sufficient information, including a summary of the methodology used to perform the ITAAC, to demonstrate that the inspections, tests, and analyses have been successfully completed; (2) the ICN provides sufficient information to demonstrate that the acceptance criteria are met; and (3) any inspections for the

ITAAC have been completed and any ITAAC findings associated with the ITAAC have been closed.

The NRC staff's determination of the successful completion of this ITAAC is based on information available at this time and is subject to the licensee's ability to maintain the condition that the acceptance criteria are met. If new information disputes the NRC staff's determination, this ITAAC will be reopened as necessary. The NRC staff's determination will be used to support a subsequent finding, pursuant to 10 CFR 52.103(g), at the end of construction that all acceptance criteria in the combined license are met. The ITAAC closure process is not finalized for this ITAAC until the NRC makes an affirmative finding under 10 CFR 52.103(g). Any future updates to the status of this ITAAC will be reflected on the NRC's Web site at *http://www.nrc.gov/reactors/new-reactors/oversight/itaac.html.*

Dated at Rockville, Maryland, this 16th day of January 2014.

For the Nuclear Regulatory Commission.

David H. Jaffe,

Senior Project Manager, Division of New Reactor Licensing, Office of New Reactors.

[FR Doc. 2014–01481 Filed 1–27–14; 8:45 am]

BILLING CODE 7590–01–P

NUCLEAR REGULATORY COMMISSION

[NRC–2014–0001]

Sunshine Act Meeting Notice

DATE: Weeks of January 27, February 3, 10, 17, 24, March 3, 2014.

PLACE: Commissioners' Conference Room, 11555 Rockville Pike, Rockville, Maryland.

STATUS: Public and Closed.

Week of January 27, 2014

Wednesday, January 29, 2014

9:30 a.m. Briefing on Equal Employment Opportunity and Civil Rights Outreach (Public Meeting); (Contact: Larniece McKoy Moore, 301–415–1942)

This meeting will be webcast live at the Web address—*http://www.nrc.gov/.*

Week of February 3, 2014—Tentative

There are no meetings scheduled for the week of February 3, 2014.

Week of February 10, 2014—Tentative

There are no meetings scheduled for the week of February 10, 2014.

Week of February 17, 2014—Tentative

Wednesday, February 19, 2014

9:30 a.m. Briefing on NRC International Activities (Closed—Ex. 1 & 9)

1:30 p.m. Briefing on Security Issues (Closed—Ex. 3)

Thursday, February 20, 2014

9:30 a.m. Briefing on Threat Environment Assessment (Closed—Ex. 1)

Week of February 24, 2014—Tentative

There are no meetings scheduled for the week of February 24, 2014.

Week of March 3, 2014—Tentative

Monday, March 3, 2014

1:30 p.m. Briefing on Human Reliability Program Activities and Analyses (Public Meeting); (Contact: Sean Peters, 301–251–7582)

This meeting will be webcast live at the Web address—*http://www.nrc.gov/.*

Tuesday, March 4, 2014

9:00 a.m. Briefing on Security Issues (Closed—Ex. 1)

1:30 p.m. Briefing on Security Issues (Closed—Ex. 1)

Friday, March 7, 2014

10:00 a.m. Meeting with the Advisory Committee on Reactor Safeguards (ACRS) (Public Meeting); (Contact: Ed Hackett, 301–415–7360)

This meeting will be webcast live at the Web address—*http://www.nrc.gov/.*

* * * * *

The schedule for Commission meetings is subject to change on short notice. To verify the status of meetings, call (recording)—301–415–1292. Contact person for more information: Rochelle Bavol, 301–415–1651.

* * * * *

The NRC Commission Meeting Schedule can be found on the Internet at: *http://www.nrc.gov/public-involve/public-meetings/schedule.html.*

* * * * *

The NRC provides reasonable accommodation to individuals with disabilities where appropriate. If you need a reasonable accommodation to participate in these public meetings, or need this meeting notice or the transcript or other information from the public meetings in another format (e.g. braille, large print), please notify Kimberly Meyer, NRC Disability Program Manager, at 301–287–0727, or by email at *Kimberly.Meyer-Chambers@nrc.gov.* Determinations on requests for reasonable accommodation will be made on a case-by-case basis.

* * * * *

Members of the public may request to receive this information electronically. If you would like to be added to the distribution, please contact the Office of the Secretary, Washington, DC 20555 (301–415–1969), or send an email to *Darlene.Wright@nrc.gov.*

Dated: January 23, 2014.

Rochelle C. Bavol,

Policy Coordinator, Office of the Secretary.

[FR Doc. 2014–01711 Filed 1–24–14; 4:15 pm]

BILLING CODE 7590–01–P

U.S. OFFICE OF PERSONNEL MANAGEMENT

Submission for Review: Revision of an Existing Information Collection, USAJOBS®, OMB Control No. 3206–0219 Correction

AGENCY: U.S. Office of Personnel Management.

ACTION: Notice; correction.

SUMMARY: The purpose of this change is to correct an error in the original notice which listed the comment period as 60 days. The correct comment period for this notice is 30 days.

DATES: The notice published on January 23, 2014 at Vol. 79, No. 15 Page 3879 is corrected as of January 28, 2014.

FOR FURTHER INFORMATION CONTACT: John Still, 202–606–1275.

Correction

In the **Federal Register** of January 23, 2014, in FR Doc. 2014–01202, on page 3879, in the second column, correct the **DATES** caption to read:

DATES: Comments are encouraged and will be accepted until Feb 24, 2014.

This process is conducted in accordance with 5 CFR 1320.1.

U.S. Office of Personnel Management.

Dan Thibodeau,

USAJOBS Deputy Program Manager.

[FR Doc. 2014–01610 Filed 1–27–14; 8:45 am]

BILLING CODE 6325–47–P

SECURITIES AND EXCHANGE COMMISSION

[Release No. 34–71365; File No. SR–ISE–2013–42]

Self-Regulatory Organizations; International Securities Exchange, LLC; Order Granting Approval of Proposed Rule Change, as Modified by Amendment No. 1, To List Options on the Nations VolDex Index

I. Introduction

On July 17, 2013, the International Securities Exchange, LLC (''Exchange'' or ''ISE'') filed with the Securities and Exchange Commission (''Commission''), pursuant to Section 19(b)(1) of the Securities Exchange Act of 1934 (''Act'') [1] and Rule 19b–4 thereunder,[2] a proposed rule change to list options on the Nations VolDex Index (''Index''). The proposed rule change was published for comment in the **Federal Register** on August 2, 2013.[3] The Commission received one comment letter on the proposed rule change.[4] On September 10, 2013, the Commission extended the time period for Commission action to October 31, 2013.[5] On October 29, 2013, ISE submitted a response to the comment letter.[6] On October 30, 2013, ISE submitted Amendment No. 1 to the proposed rule change. On October 31, 2013, the Commission instituted proceedings to determine whether to approve or disapprove the proposed rule change, as modified by Amendment No. 1.[7] The Commission subsequently received one additional comment letter on the proposed rule change.[8] This order grants approval of the proposed rule change, as modified by Amendment No. 1.

II. Description of the Proposed Rule Change

The Exchange proposes to list and trade cash-settled, European-style options on the Index, which measures changes in implied volatility of the SPDR S&P 500 Exchange-Traded Fund (''SPY'').[9]

The Index is calculated using a methodology developed by NationsShares, which uses published real-time bid/ask quotes of SPY options.[10] The Index will be calculated and maintained by a calculation agent acting on behalf of NationsShares. The Index will be updated on a real-time basis on each trading day beginning at 9:30 a.m. and ending at 4:15 p.m. (New York time).[11] Values of the Index also will be disseminated every 15 seconds during the Exchange's regular trading hours to market information vendors such as Bloomberg and Thomson Reuters. In the event the Index ceases to be maintained or calculated, or its values are not disseminated every 15 seconds by a widely available source, the Exchange will not list any additional series for trading and will limit all transactions in such options to closing transactions only for the purpose of maintaining a fair and orderly market and protecting investors.

The Exchange proposes that the standard trading hours for index options (9:30 a.m. to 4:15 p.m., New York time) will apply to options on the Index. Options on the Index will expire on the Wednesday that is thirty days prior to the third Friday of the calendar month immediately following the expiration month. Trading in expiring options on the Index will normally cease at 4:15 p.m. (New York time) on the Tuesday preceding an expiration Wednesday. The exercise and settlement value will be calculated on Wednesday at 9:30 a.m. (New York time) using the mid-point of the NBBO for the SPY options used in the calculation of the Index at that time. The exercise-settlement amount is equal to the difference between the settlement value and the exercise price of the option, multiplied by $100. Exercise will result in the delivery of cash on the business day following expiration.

In Amendment No. 1, the Exchange expresses its view that manipulation of the Index would be very difficult, particularly around the time when the settlement value is determined. According to the Exchange, the settlement value calculation for the Index, which is based on the mid-point NBBO of the input components, is a methodology unlike how other index settlement values are determined, as most are calculated based on transaction prices of the individual index components. The Exchange believes that manipulating the Index settlement value will be difficult based on the dynamics of a quote-based calculation methodology as opposed to a single transaction price and because the option prices themselves would make such an endeavor cost prohibitive. Further, according to the Exchange, the vast liquidity of SPY options as well as the underlying SPY shares ensures a multitude of market participants at any given time. For example, ISE notes that at least 19 market makers actively traded SPY options on ISE during September 2013 on any given day, and there are now 12 options exchanges that list SPY options. Due to the high level of participation among market makers that can enter quotes in SPY options series, the Exchange believes it would be very difficult for a single participant to alter the NBBO width across multiple series in any significant way without exposing the would-be manipulator to regulatory scrutiny and financial costs.

The Exchange proposes to adopt minimum trading increments for options on the Index to be $0.05 for series trading below $3, and $0.10 for series trading at or above $3. The Exchange also proposes to set the minimum strike price interval for options on the Index at $1 or greater when the strike price is $200 or less, and $5 or greater when the strike price is greater than $200. Currently, when new series of index options with a new expiration date are opened for trading, or when additional series of index options in an existing expiration date are opened for trading as the current value of the underlying index moves substantially from the exercise prices of series already opened, the exercise prices of such new or additional series must be reasonably related to the current value of the underlying index at the time such series are first opened for trading.[12] The Exchange, however, proposes to eliminate this range limitation that would otherwise limit the number of $1 strikes that may be listed in options on the Index. The Exchange's proposal to eliminate this range limitation is identical to strike

[1] 15 U.S.C. 78s(b)(1).

[2] 17 CFR 240.19b–4.

[3] *See* Securities Exchange Act Release No. 70059 (July 29, 2013), 78 FR 47041 (''Notice'').

[4] *See* letter to Elizabeth M. Murphy, Secretary, Commission, from Edward T. Tilly, Chief Executive Officer, Chicago Board Options Exchange, Incorporated (''CBOE''), dated August 23, 2013 (''CBOE Letter I'').

[5] *See* Securities Exchange Act Release No. 70362, 78 FR 56955 (September 16, 2013).

[6] *See* letter to Elizabeth M. Murphy, Secretary, Commission, from Michael J. Simon, Secretary and General Counsel, ISE, dated October 29, 2013 (''ISE Letter'').

[7] *See* Securities Exchange Act Release No. 70787, 78 FR 66798 (November 6, 2013).

[8] *See* letter to Elizabeth M. Murphy, Secretary, Commission, from Edward T. Tilly, Chief Executive Officer, CBOE, dated November 27, 2013 (''CBOE Letter II'').

[9] According to the Exchange, SPY is historically the largest and most actively-traded exchange-traded fund in the United States as measured by its assets under management and the value of shares traded. *See* Notice, *supra* note 3, at 47042.

[10] *See id.* (describing in more detail the calculation methodology for the Index).

[11] If the current published value of a component is not available, the last published value will be used in the calculation.

[12] *See* ISE Rule 2009(c)(3). The term ''reasonably related to the current index value of the underlying index'' means that the exercise price is within thirty percent of the current index value. *See* ISE Rule 2009(c)(4).

price intervals adopted by CBOE for the CBOE Volatility Index (''VIX'').[13]

The Exchange proposes to list options on the Index in the three consecutive near-term expiration months plus up to three successive expiration months in the March cycle.[14] In addition, long-term option series having up to sixty months to expiration,[15] Short Term Option Series,[16] and Quarterly Options Series [17] may also be traded. Options on the Index will be quoted and traded in U.S. dollars.[18]

The Exchange believes that the Index is a broad-based index, as that term is defined in ISE Rule 2001(k).[19] The Exchange proposes that the Index should be treated as a broad-based index for purposes of position limits, exercise limits, and margin requirements.[20] Accordingly, the Exchange proposes no position or exercise limits for options on the Index [21] and the Exchange proposes to apply margin requirements that are identical to those applied for its other broad-based index options.

In addition, the Exchange proposes that the trading of options on the Index will be subject to the same rules that currently govern the trading of Exchange index options, including sales practice rules and trading rules. Trading of options on the Index will also be subject to the trading halt procedures applicable to other index options traded on the Exchange.[22] Further, Chapter 6 of the Exchange's rules, which is designed to protect public customer trading, will apply to trading in options on the Index. A trading license issued by the Exchange will also be required for all market makers to effect transactions as market makers in the Index options in accordance with ISE Rule 2013.

The Exchange represents that it has an adequate surveillance program in place for options on the Index and intends to apply those same program procedures that it applies to the Exchange's other options products. Further, in Amendment No. 1, the Exchange notes that it will monitor for any potential manipulation of the Index settlement value both according to its current procedures and additional enhanced surveillance measures.[23] Additionally, the Exchange notes that it is a member of the Intermarket Surveillance Group, through which it can coordinate surveillance and investigative information sharing in the stock and options markets with all of the U.S. registered stock and options markets. The Exchange also represents that it has the necessary system capacity to support additional quotations and messages that will result from the listing and trading of options on the Index.

III. Discussion and Commission Findings

The Commission finds that the proposed rule change is consistent with the requirements of the Act and the rules and regulations thereunder applicable to a national securities exchange.[24] Specifically, the Commission finds that the proposed rule change is consistent with Section 6(b)(5) of the Act,[25] which requires, among other things, that the rules of a national securities exchange be designed to prevent fraudulent and manipulative acts and practices, to promote just and equitable principles of trade, to remove impediments to and perfect the mechanism of a free and open market and a national market system and, in general, to protect investors and the public interest. Specifically, the Commission believes that the proposed Index options provide investors with an additional trading and hedging mechanism.

As noted above, the Commission received two comment letters regarding the proposed rule change.[26] In its comment letters, CBOE argues that the Index should not be treated as a broad-based security index for regulatory purposes.[27] Specifically, CBOE notes that the spot calculation of the Index would be comprised of a total of four component SPY put options and that the settlement value for the Index option would be calculated using the opening NBBO quotations of those component options.[28] CBOE states that the component weights of the four put options used to calculate the Index can become highly concentrated in just one or two component options, depending on the time to expiration and the relationship of the forward SPY price to the strike prices of the component options.[29] In this regard, CBOE questions the Exchange's proposal not to impose position limits for options on the Index.[30] In particular, CBOE asserts that, although the Commission has permitted some broad-based security index options to have no position limits, the same rationale should not apply to the proposed Index options because they are not options on a broad-based security index.[31] CBOE argues that the more analogous comparison for position limit treatment is the Alpha Index options that trade on NASDAQ OMX PHLX LLC (''Phlx'').[32] According to CBOE, Alpha Index options are cash-settled index options that measure the relative performance of two securities (a target component and a benchmark component), and all approved Alpha Index pairs include SPY as the benchmark component.[33] CBOE notes that Alpha Index options where the target component is an exchange-traded

[13] *See* Securities Exchange Act Release No. 63155 (October 21, 2010), 75 FR 66402 (October 28, 2010) (SR–CBOE–2010–096).

[14] *See* ISE Rule 2009(a)(3).

[15] *See* ISE Rule 2009(b)(1).

[16] *See* ISE Rule 2009, Supplementary Material .01.

[17] *See* ISE Rule 2009, Supplementary Material .02.

[18] *See* ISE Rule 2009(a)(1).

[19] ISE Rule 2001(k) defines the terms ''market index'' and ''broad-based index'' to mean an index designed to be representative of a stock market as a whole or of a range of companies in unrelated industries.

[20] In its response letter, ISE states that ISE members are bound by the initial and maintenance margin requirements of either CBOE or the New York Stock Exchange. *See* ISE Letter, *supra* note 6, at 3. ISE clarifies that although CBOE has margin rules designed for individual stock- or ETF-based volatility index options, its proposal intends to require compliance with CBOE's margin rules applicable to broad-based index options rather than its specialized rules adopted for specified individual stock- or ETF-based volatility index options. *See id.*

[21] The Exchange believes that because the Index will settle using published quotes of SPY options and there are currently no position limits for SPY options, it is appropriate not to impose position or exercise limits for options on the Index. The Exchange notes that because the size of the market underlying SPY options is so large, it should dispel concerns regarding market manipulation. The Exchange believes that the same reasoning applies to options on the Index since the value of options on the Index is derived from the volatility of SPY, as implied by SPY options. The Exchange also notes that VIX options are not subject to any position or exercise limits. *See* Notice, *supra* note 3, at 47043.

[22] *See* ISE Rule 2008(c).

[23] Specifically, the Exchange represents that it will review the opening ISE BBO (''IBBO'') for the input options components to determine if the IBBO had an effect on the NBBO for these options series. If it did, the Exchange can determine which member entered the IBBO quote and review the member's position and quoting activity to determine if the quote may have been entered to impact the NBBO. The Exchange also represents that it will compare the Index settlement value to the subsequent disseminated value. If the difference between these two values is significant, the Exchange will review the opening quotes used in the calculation of the Index across all marketplaces to determine which exchange(s) contributed to opening NBBO quote(s) and contact the exchange(s) that entered the quote(s). *See* Amendment No. 1.

[24] In approving this proposed rule change, the Commission has considered the proposed rule's impact on efficiency, competition, and capital formation. *See* 15 U.S.C. 78c(f).

[25] 15 U.S.C. 78f(b)(5).

[26] *See* CBOE Letter I, *supra* note 4 and CBOE Letter II, *supra* note 8.

[27] *See* CBOE Letter I, *supra* note 4 at 1–2.

[28] *See* CBOE Letter I, *supra* note 4 at 1 and CBOE Letter II, *supra* note 8 at 1.

[29] *See* CBOE Letter I, *supra* note 4 at 1 and CBOE Letter II, *supra* note 8 at 1.

[30] *See* CBOE Letter I, *supra* note 4 at 2–3 and CBOE Letter II, *supra* note 8 at 1.

[31] *See* CBOE Letter I, *supra* note 4 at 2.

[32] *See* CBOE Letter I, *supra* note 4 at 2 and CBOE Letter II, *supra* note 8 at 1–2.

[33] *See* CBOE Letter I, *supra* note 4 at 2 and CBOE Letter II, *supra* note 8 at 2.

fund have a position limit of 15,000 contracts, and Alpha Index options where the target component is a single stock have a position limit of 60,000 contracts.[34]

In its response letter, ISE draws an analogy between the Index and the VIX.[35] ISE argues that, as with the VIX, designating the Index as a broad-based index should not be based only on the number of components that the index contains, but rather, on the economic exposure that the underlying reference seeks to provide.[36] ISE states that, according to CBOE, the VIX is a key measure of the market expectations of near-term volatility conveyed by options on the S&P 500 Index.[37] ISE asserts that the Index provides a similar economic exposure as exposure to the VIX because it measures changes in implied volatility of SPY, which is a broad-based exchange-traded fund based on the price and yield of the stocks held in the SPY portfolio.[38] ISE therefore concludes that the Index should similarly be treated as broad-based by looking through to the exposure provided by the underlying reference.[39]

ISE also argues that the proposed Index options are not analogous to Alpha Index options.[40] In particular, ISE points out that Phlx's Alpha Index options involve the pairing of a single equity security or an exchange-traded fund that has a position limit against the SPY that has no position limit.[41] ISE believes that, because the pairing includes one security that has position limits, it does not follow that the combined new index should have no position limits.[42] In contrast, ISE believes that its proposal to apply no position limits to the Index options is appropriate.[43]

Further, as discussed above, in Amendment No. 1, ISE asserts that there is a low potential for manipulation of the settlement value of the Index due to the quote-based calculation methodology used, high cost that would result from any attempted manipulation, and the vast liquidity and high level of participation among market participants making manipulation very difficult.[44] In addition, while ISE notes that manipulation of the Index settlement value is unlikely, it represents that in addition to its current surveillance procedures, it will undertake certain additional surveillance measures with respect to the Index options.[45]

The Commission believes that the Exchange's proposal to impose no position limits on the Index options is appropriate and consistent with the Act.[46] As noted above, the Index is calculated using published real-time bid/ask quotes of SPY options and measures changes in the implied volatility of the SPY. The Commission notes that SPY options are the most actively-traded options in terms of average daily volume. The Commission believes that because the options composing the Index are extremely liquid, the potential manipulation and potential market disruption concerns that position limits are designed to address are mitigated in the case of this product.[47] Moreover, the Commission believes that having no position limits for the proposed Index options may benefit investors by bringing additional depth and liquidity to these Index options without raising significant concerns about potential manipulation or potential market disruption.

The Commission also believes that permitting $1.00 strike price intervals if the strike price is equal to or less than $200 will provide investors with added flexibility in the trading of these options and will further the public interest by allowing investors to establish positions that are better tailored to meet their investment objectives. As noted above, the Exchange proposes to provide an exception for the proposed Index options from the existing requirement that exercise prices of new or additional series must be reasonably related to the current value of the Index at the time such series are first opened for trading.[48] The Commission believes that this change is consistent with the Act because it should provide investors added flexibility to meet their investment objectives.[49] The Commission also notes that the Exchange has represented that it has the necessary systems capacity to handle the additional traffic associated with the listing and trading of this new product and it expects that the Exchange considered this expansion of the permissible range of strike prices in making such a representation.[50]

The Commission also believes that it is consistent with the Act to apply margin requirements to the proposed Index options that are otherwise applicable to options on broad-based indexes.[51] The Commission further believes that the Exchange's proposed minimum trading increment, series openings, and other aspects of the proposed rule change are appropriate and consistent with the Act.

As a national securities exchange, the Exchange is required, under Section 6(b)(1) of the Act,[52] to enforce compliance by its members and persons associated with its members with the provisions of the Act, Commission rules and regulations thereunder, and its own rules. In this regard, the Commission notes that trading of options on the Index will be subject to the same rules that currently govern the trading of other index options on the Exchange.[53] In addition, as noted above, the Exchange has asserted that manipulation of the Index settlement value will be difficult.[54] Moreover, the Exchange has represented that it has an adequate surveillance program in place for options traded on the Index, and will monitor for any potential manipulation of the Index settlement value according to its current surveillance procedures and additional surveillance measures.[55] In approving the proposed listing and trading of the Index options, the Commission has also relied on ISE's representation that it has the necessary systems capacity to support the new options series that will result from this proposal.[56]

IV. Conclusion

It is therefore ordered, pursuant to Section 19(b)(2) of the Act,[57] that the proposed rule change (SR–ISE–2013–42), as modified by Amendment No. 1, be, and hereby is, approved.

[34] *See* CBOE Letter I, *supra* note 4 at 2 and CBOE Letter II, *supra* note 8 at 2.

[35] ISE notes that CBOE sought to designate the VIX as a broad-based index. *See* ISE Letter, *supra* note 6, at 1.

[36] *See id.,* at 2.

[37] *See id.*

[38] *See id.*

[39] *See id.*

[40] *See id.*

[41] *See id.*

[42] *See id.*

[43] *See id.,* at 2–3. *See also supra* note 21 and accompanying text.

[44] *See* Amendment No. 1.

[45] *See supra* note 23 and accompanying text.

[46] In approving this proposed rule change to list and trade options on the Index, the Commission is not determining whether the Index is a ''narrow-based'' security index as that term is defined in the Act. *See* 15 U.S.C. 78c(a)(55)(B).

[47] *See also* Amendment No. 1.

[48] *See supra* notes 12–13 and accompanying text.

[49] The Commission notes that CBOE recently eliminated the band that limited the number of $1 strikes that could be listed on VIX options. *See* Securities Exchange Act Release No. 63155 (October 21, 2010), 75 FR 66402 (October 28, 2010) (SR–CBOE–2010–096).

[50] *See* Notice, *supra* note 3, at 47044.

[51] *See supra* note 20.

[52] 15 U.S.C. 78f(b)(1).

[53] *See supra* note 22 and accompanying text.

[54] *See* Amendment No. 1.

[55] *See* Notice, *supra* note 3, at 47044 and Amendment No. 1.

[56] *See* Notice, *supra* note 3, at 47044.

[57] 15 U.S.C. 78s(b)(2).

For the Commission, by the Division of Trading and Markets, pursuant to delegated authority.[58]

Kevin M. O'Neill,

Deputy Secretary.

[FR Doc. 2014–01510 Filed 1–27–14; 8:45 am]

BILLING CODE 8011–01–P

SECURITIES AND EXCHANGE COMMISSION

[Release No. 34–71366; File No. SR–NYSEArca–2014–01]

Self-Regulatory Organizations; NYSE Arca, Inc.; Notice of Filing and Immediate Effectiveness of Proposed Rule Change Amending NYSE Arca Equities Rule 7.31 To Add a Minimum Execution Size Designation for Tracking Orders and MPL–IOC Orders

January 22, 2014.

Pursuant to Section 19(b)(1)[1] of the Securities Exchange Act of 1934 (the ''Act'')[2] and Rule 19b–4 thereunder,[3] notice is hereby given that, on January 10, 2014, NYSE Arca, Inc. (the ''Exchange'' or ''NYSE Arca'') filed with the Securities and Exchange Commission (the ''Commission'') the proposed rule change as described in Items I and II below, which Items have been prepared by the self-regulatory organization. The Commission is publishing this notice to solicit comments on the proposed rule change from interested persons.

I. Self-Regulatory Organization's Statement of the Terms of Substance of the Proposed Rule Change

The Exchange proposes to amend NYSE Arca Equities Rule 7.31 to add a minimum execution size designation for Tracking Orders and MPL–IOC Orders. The text of the proposed rule change is available on the Exchange's Web site at *www.nyse.com,* at the principal office of the Exchange, and at the Commission's Public Reference Room.

II. Self-Regulatory Organization's Statement of the Purpose of, and Statutory Basis for, the Proposed Rule Change

In its filing with the Commission, the self-regulatory organization included statements concerning the purpose of, and basis for, the proposed rule change and discussed any comments it received on the proposed rule change. The text of those statements may be examined at the places specified in Item IV below. The Exchange has prepared summaries, set forth in sections A, B, and C below, of the most significant parts of such statements.

A. Self-Regulatory Organization's Statement of the Purpose of, and Statutory Basis for, the Proposed Rule Change

1. Purpose

The Exchange is proposing to amend NYSE Arca Equities Rule 7.31 to add a minimum execution size designation for Tracking Orders and MPL–IOC Orders.

A Tracking Order is an undisplayed, priced round lot order that is eligible for execution in the Tracking Order Process[4] against orders equal to or less than the aggregate size of Tracking Order interest available at that price. For example, if a Tracking Order to buy is entered for 1,000 shares and a sell order enters the Tracking Order Process for 1,200 shares at the same price, the sell order would not execute against the buy Tracking Order because it is larger than the size of the buy Tracking Order.

An MPL Order is a type of Working Order that has conditional or undisplayed price and/or size. As set forth in NYSE Arca Equities Rule 7.31(h)(5), an MPL Order is a Passive Liquidity Order that is priced at the midpoint of the PBBO and does not trade through a Protected Quotation. An MPL Order has a minimum order entry size of one share and Users may specify a minimum executable size for an MPL Order, which must be no less than one share. If an MPL Order has a specified minimum executable size, it will execute against an incoming order that meets the minimum executable size and is priced at or better than the midpoint of the PBBO. If the leaves quantity becomes less than the minimum size, the minimum executable size restriction will no longer be enforced on executions.

As set forth in NYSE Arca Equities Rule 7.31(h)(6), an MPL–IOC Order is an MPL Order priced at the midpoint of the PBBO when entered that follows the time-in-force instructions of an immediate-or-cancel order. An MPL–IOC Order follows the same execution and priority rules as an MPL Order, provided, however, (i) an MPL–IOC Order shall have a minimum order entry size of one round lot, (ii) Users may not specify a minimum executable size for an MPL–IOC Order, and (iii) if the market is locked or crossed, the MPL–IOC Order will cancel.

The Exchange proposes to amend Rule 7.31(f) to add optional functionality so that the ETP Holder may designate a minimum execution size for a Tracking Order. For example, if an ETP Holder that submits a Tracking Order to buy for 1,000 shares sets a minimum quantity of 200 shares, that Tracking Order will only execute against eligible contra-side interest that is 200 to 1,000 shares in size at the same price. As proposed, if the Tracking Order with a minimum size requirement is executed but not exhausted and the remaining portion of the Tracking Order is less than the minimum size requirement, the Exchange would cancel the Tracking Order. So if the Tracking Order for 1,000 shares has a minimum quantity of 200 shares, and receives an execution of 900 shares, because the remaining portion (100 shares) is less than the minimum execution quantity, it would be cancelled.

The Exchange also proposes to amend NYSE Arca Equities Rule 7.31(h)(6) to delete that Users may not specify a minimum executable size for an MPL–IOC Order. As proposed, an MPL–IOC Order will operate in the same manner as a regular MPL Order with respect to the ability to specify a minimum executable size. Because such order also includes the immediate-or-cancel time-in-force condition, if the contra-side available liquidity does not meet the minimum executable size designated for the MPL–IOC Order, the MPL–IOC Order will immediately cancel. The Exchange is proposing to make this change because it now has the technological capability to enable Users to specify a minimum executable size for MPL–IOC Orders, thereby reducing one of the differences between regular MPL Orders and MPL–IOC Orders.

The Exchange believes that providing ETP Holders with the option to designate a minimum quantity for additional non-displayed order types will promote the entry of liquidity at the Exchange because ETP Holders entering such orders will be assured of obtaining a larger-sized execution. With respect to Tracking Orders, the Exchange believes that the proposed rule change could attract ETP Holders that are seeking larger executions to enter Tracking Orders because by designating a

[58] 17 CFR 200.30–3(a)(12).

[1] 15 U.S.C. 78s(b)(1).

[2] 15 U.S.C. 78a.

[3] 17 CFR 240.19b–4.

[4] *See* NYSE Arca Equities Rules 7.31(f) and 7.37(c) (Order Execution). The Tracking Order Process is available during Core Trading Hours only, during which orders may be matched and executed in the Tracking Order Process as follows: If an order has not been executed in its entirety pursuant to the Directed Order, Display Order or Working Order processes, the NYSE Arca Marketplace shall match and execute any remaining part of the order in the Tracking Order Process in price/time priority, except that (1) any portion of an order received from another market center or market participant shall be cancelled immediately, and (2) an incoming ISO order shall not interact with the Tracking Order Process.

minimum quantity, the submitting ETP Holder would be assured that they are not traded against by smaller-sized interest. As noted above, the Exchange notes that it already provides for similar functionality for MPL Orders.[5] The one difference between the proposed functionality for Tracking Orders and the existing minimum quantity feature for MPL Orders is that if a Tracking Order is reduced below the size of the minimum quantity, the Tracking Order will cancel. The Exchange believes that this difference is appropriate because at the Exchange, Tracking Orders are passive liquidity of last resort at the Exchange. If an ETP Holder seeks to add passive liquidity that does not cancel if it is reduced below the minimum quantity designation, that ETP Holder could enter an MPL Order, which is another form of non-displayed liquidity, with a minimum quantity.

The Exchange also proposes to clarify Rule 7.31(f) to specify that STP modifiers, as defined in Rule 7.31(qq), are ignored for Tracking Orders. The Exchange notes that the Exchange makes STP modifiers available to ETP Holders on an optional basis. If, however, an ETP Holder designates a Tracking Order with an STP modifier, Exchange systems will ignore that modifier when processing the order. The Exchange notes that this is current functionality and proposes to update the rule to provide transparency regarding how order types and optional modifiers interact. The Exchange further notes that the functionality associated with STP modifiers was added after the Tracking Order process was implemented and the two functions are not currently technologically compatible.

The Exchange will announce by Trader Update the implementation date of the proposed change to add a minimum execution size designation for Tracking Orders and MPL–IOC Orders.

2. Statutory Basis

The proposed rule change is consistent with Section 6(b) of the Securities Exchange Act of 1934 (the ''Act''),[6] in general, and furthers the objectives of Section 6(b)(5),[7] in particular, in that it is designed to prevent fraudulent and manipulative acts and practices, to promote just and equitable principles of trade, to foster cooperation and coordination with persons engaged in facilitating transactions in securities, and to remove impediments to and perfect the mechanism of a free and open market and a national market system.

The Exchange believes that the proposal would remove impediments to and perfect the mechanism of a free and open market and protect investors and the public interest because it would provide an incentive for ETP Holders seeking larger-sized executions both to post liquidity at the Exchange using these features and to route larger-sized orders to the Exchange because of the potential for an execution against such liquidity. While interest with a minimum execution quantity will not execute against arriving smaller-sized contra interest, the Exchange does not believe that this will permit unfair discrimination among customers, brokers, or dealers because a size designation does not discriminate against a particular ETP Holder. Rather, the proposed functionality would be available to all ETP Holders. The Exchange further believes that adding an optional minimum quantity would remove impediments to and perfect the mechanism of a free and open market system because the proposed functionality is similar to existing functionality available to ETP Holders with the MPL Order type, which also permits an ETP Holder to designate a minimum execution quantity. The proposed functionality is also similar to functionality available at the NASDAQ Stock Market LLC (''Nasdaq'')[8] and the New York Stock Exchange LLC (''NYSE'').[9] The Exchange further believes that the proposal removes impediments to and perfects a national market system by offering the minimum execution quantity option differently for Tracking Orders and for MPL–IOC orders. Specifically, Tracking Orders are non-displayed passive liquidity of last resort at the Exchange that an order may execute against before being routed to another market. The Exchange believes it is appropriate to provide an option for ETP Holders seeking to provide such liquidity to not only designate a minimum execution quantity, but for such orders to cancel if through executions, the leaves quantity is smaller than the ETP Holder-designated minimum execution quantity.

The Exchange believes that adding specificity to Rule 7.31(f) that STP modifiers are ignored for Tracking Order [sic] removes impediments to and perfects the mechanism of a free and open market by providing transparency of when STP modifier protection is not available. The Exchange notes that use of STP modifiers is optional and that ETP Holders that enter Tracking Orders should be aware that they have entered such interest and therefore can undertake measures other than STP modifiers to prevent wash sales.

B. Self-Regulatory Organization's Statement on Burden on Competition

The Exchange does not believe that the proposed rule change will impose any burden on competition that is not necessary or appropriate in furtherance of the purposes of the Act. The Exchange believes that the proposed amendment will not impose any burdens on competition because the proposal would extend the availability of an existing functionality—the optional minimum execution quantity—to an [sic] additional non-displayed liquidity-providing order types, the Tracking Order and the MPL–IOC Orders. The Exchange further notes that Nasdaq already offers similar functionality for its non-displayed orders.

C. Self-Regulatory Organization's Statement on Comments on the Proposed Rule Change Received From Members, Participants, or Others

No written comments were solicited or received with respect to the proposed rule change.

III. Date of Effectiveness of the Proposed Rule Change and Timing for Commission Action

The Exchange has filed the proposed rule change pursuant to Section 19(b)(3)(A)(iii) of the Act[10] and Rule 19b–4(f)(6) thereunder.[11] Because the proposed rule change does not: (i) Significantly affect the protection of investors or the public interest; (ii) impose any significant burden on competition; and (iii) become operative prior to 30 days from the date on which it was filed, or such shorter time as the Commission may designate, if consistent with the protection of investors and the public interest, the proposed rule change has become effective pursuant to Section 19(b)(3)(A) of the Act[12] and Rule 19b–4(f)(6) thereunder.[13]

[5] *See* NYSE Arca Equities Rule 7.31(h)(5).

[6] 15 U.S.C. 78f(b).

[7] 15 U.S.C. 78f(b)(5).

[8] *See* Nasdaq Rule 4751(d)(5) (defining a ''Minimum Quantity Order'' as a Non-Displayed Order that will not execute unless a specified minimum quantity of shares can be obtained).

[9] *See* NYSE Rule 13 (defining the ''IOC–MTS Order'' as an immediate or cancel order that may include a minimum trade size instruction).

[10] 15 U.S.C. 78s(b)(3)(A)(iii).

[11] 17 CFR 240.19b–4(f)(6).

[12] 15 U.S.C. 78s(b)(3)(A).

[13] 17 CFR 240.19b–4(f)(6). As required under Rule 19b–4(f)(6)(iii), the Exchange provided the Commission with written notice of its intent to file the proposed rule change, along with a brief description and the text of the proposed rule change, at least five business days prior to the date

At any time within 60 days of the filing of such proposed rule change, the Commission summarily may temporarily suspend such rule change if it appears to the Commission that such action is necessary or appropriate in the public interest, for the protection of investors, or otherwise in furtherance of the purposes of the Act. If the Commission takes such action, the Commission shall institute proceedings under Section 19(b)(2)(B) of the Act [14] to determine whether the proposed rule change should be approved or disapproved.

IV. Solicitation of Comments

Interested persons are invited to submit written data, views, and arguments concerning the foregoing, including whether the proposed rule change is consistent with the Act. Comments may be submitted by any of the following methods:

Electronic Comments

- Use the Commission's Internet comment form (*http://www.sec.gov/rules/sro.shtml*); or
- Send an email to *rule-comments@sec.gov.* Please include File Number SR–NYSEArca–2014–01 on the subject line.

Paper Comments

- Send paper comments in triplicate to Elizabeth M. Murphy, Secretary, Securities and Exchange Commission, 100 F Street NE., Washington, DC 20549–1090.

All submissions should refer to File Number SR–NYSEArca–2014–01. This file number should be included on the subject line if email is used. To help the Commission process and review your comments more efficiently, please use only one method. The Commission will post all comments on the Commission's Internet Web site (*http://www.sec.gov/rules/sro.shtml*). Copies of the submission, all subsequent amendments, all written statements with respect to the proposed rule change that are filed with the Commission, and all written communications relating to the proposed rule change between the Commission and any person, other than those that may be withheld from the public in accordance with the provisions of 5 U.S.C. 552, will be available for Web site viewing and printing in the Commission's Public Reference Room, 100 F Street NE., Washington, DC 20549, on official business days between the hours of 10:00 a.m. and 3:00 p.m. Copies of the filing also will be available for inspection and copying at the principal office of the Exchange. All comments received will be posted without change; the Commission does not edit personal identifying information from submissions. You should submit only information that you wish to make available publicly. All submissions should refer to File Number SR–NYSEArca-2014–01 and should be submitted on or before February 18, 2014.

For the Commission, by the Division of Trading and Markets, pursuant to delegated authority.[15]

Kevin M. O'Neill,

Deputy Secretary.

[FR Doc. 2014–01511 Filed 1–27–14; 8:45 am]

BILLING CODE 8011–01–P

of filing of the proposed rule change, or such shorter time as designated by the Commission.

[14] 15 U.S.C. 78s(b)(2)(B).

[15] 17 CFR 200.30–3(a)(12).

SECURITIES AND EXCHANGE COMMISSION

[Release No. 34–71367; File No. SR–NYSEArca–2014–03]

Self-Regulatory Organizations; NYSE Arca, Inc.; Notice of Filing and Immediate Effectiveness of Proposed Rule Change Amending NYSE Arca Equities Rule 7.31(b)(2) To Specify That the Exchange Would Not Apply Limit Order Price Protection To Limit Orders Entered Before Core Trading Hours That Are Designated for the Core Trading Session or the Market Order Auction

January 22, 2014.

Pursuant to Section 19(b)(1) [1] of the Securities Exchange Act of 1934 (the ''Act'') [2] and Rule 19b–4 thereunder,[3] notice is hereby given that, on January 9, 2014, NYSE Arca, Inc. (the ''Exchange'' or ''NYSE Arca'') filed with the Securities and Exchange Commission (the ''Commission'') the proposed rule change as described in Items I and II below, which Items have been prepared by the self-regulatory organization. The Commission is publishing this notice to solicit comments on the proposed rule change from interested persons.

I. Self-Regulatory Organization's Statement of the Terms of Substance of the Proposed Rule Change

The Exchange proposes to amend NYSE Arca Equities Rule 7.31(b)(2) to specify that the Exchange would not apply limit order price protection to limit orders entered before Core Trading Hours that are designated for the Core Trading Session or the Market Order Auction. The text of the proposed rule change is available on the Exchange's Web site at *www.nyse.com,* at the principal office of the Exchange, and at the Commission's Public Reference Room.

II. Self-Regulatory Organization's Statement of the Purpose of, and Statutory Basis for, the Proposed Rule Change

In its filing with the Commission, the self-regulatory organization included statements concerning the purpose of, and basis for, the proposed rule change and discussed any comments it received on the proposed rule change. The text of those statements may be examined at the places specified in Item IV below. The Exchange has prepared summaries, set forth in sections A, B, and C below, of the most significant parts of such statements.

A. Self-Regulatory Organization's Statement of the Purpose of, and Statutory Basis for, the Proposed Rule Change

1. Purpose

The Exchange is proposing to amend NYSE Arca Equities Rule 7.31(b)(2) to specify that the Exchange would not apply limit order price protection to limit orders entered before Core Trading Hours that are designated for the Core Trading Session or the Market Order Auction. The Exchange also proposes to add a descriptive heading of ''Limit Order Price Protection'' to Rule 7.31(b)(2).

Pursuant to Rule 7.31(b)(2), a limit order will be rejected if it is priced a specified percentage away from the contra-side national best bid (''NBB'') or national best offer (''NBO''), *i.e.,* a limit order price protection. The specified percentage is equal to the corresponding ''numerical guideline'' percentage set forth in paragraph (c)(1) of Rule 7.10 (Clearly Erroneous Executions) for the Core Trading Session. As set forth in Rule 7.34, the Exchange operates three sessions: The Opening Session, the Core Trading Session, and the Late Trading Session. The limit order price protection features set forth in Rule 7.31(b)(2) are currently applicable to limit orders entered during all three sessions.

During the Opening Session, the Exchange accepts limit orders that are designated for the Core Trading Session. Limit orders designated for the Core Trading Session are not eligible to participate in the Opening Session, but are eligible to participate in the Market

[1] 15 U.S.C. 78s(b)(1).

[2] 15 U.S.C. 78a.

[3] 17 CFR 240.19b–4.

Order Auction.[4] The Exchange also accepts Auction-only Limit Orders during the Opening Session, and these limit orders are similarly not eligible for execution during the Opening Session, but are eligible to participate in the Market Order Auction.

Currently, limit orders entered during the Opening Session that are designated for the Core Trading Session or the Market Order Auction are evaluated upon arrival of whether they are priced a specified percentage away of the then-applicable NBB or NBO and rejected if priced outside such parameters. For example, if a limit order designated for the Core Trading Session is entered at 7:30 a.m. Eastern, which is two hours before the Core Trading Session begins, it will be evaluated based on the NBB or NBO at 7:30 a.m. Eastern of whether it should be rejected, even though it would not be eligible to execute at that time.

The Exchange does not believe that the original purpose of the price protection feature, which is to reject orders that are priced so far away from the prevailing quote in the market that they could cause significant price dislocation,[5] is served by rejecting an order that is not eligible to execute at the time of arrival. Specifically, the Exchange does not believe that rejecting limit orders designated for the Core Trading Session or Market Order Auction based on the then-applicable NBB or NBO would prevent significant price dislocation because such orders would not have been eligible to execute at that NBB or NBO. Rather, the NBB or NBO could have moved by the time such orders are eligible to execute, and therefore rejecting such orders before they are eligible to execute would have denied such orders the opportunity to execute.

Instead, the Exchange believes that orders designated for the Core Trading Session or the Market Order Auction should be accepted by Exchange systems and not subject to the limit order price protection upon arrival so that such orders may populate the Exchange's book in advance of the Core Trading Session. In particular, the Exchange believes that allowing all eligible limit orders to participate in the Market Order Auction would promote the objective of price discovery by ensuring that all interest intended for such Auction, regardless of the NBB or NBO at time of arrival, would be eligible to be considered for the Auction. Accordingly, the Exchange proposes to amend Rule 7.31(b)(2) to specify that that the Exchange would not apply limit order price protection to limit orders entered before Core Trading Hours that are designated for the Core Trading Session or the Market Order Auction.

The Exchange will announce by Trader Update the implementation date of the proposed change.

2. Statutory Basis

The statutory basis for the proposed rule change is Section 6(b)(5) of the Securities Exchange Act of 1934 (the ''Act''),[6] which requires the rules of an exchange to promote just and equitable principles of trade, to remove impediments to and perfect the mechanism of a free and open market and a national market system and, in general, to protect investors and the public interest. The Exchange believes that the proposed rule removes impediments to and perfects the mechanism of a free and open market and a national market system because it would assure that all interest that is designated to participate in the Core Trading Session or the Market Order Auction and that is entered during the Opening Session would be eligible to participate and would not be rejected based on an NBB or NBO that is in effect upon arrival. The Exchange further believes that the proposal will protect investors and the public interest because there will be additional liquidity available for either the Core Trading Session or Market Order Auction, thereby expanding the opportunities for executions.

B. Self-Regulatory Organization's Statement on Burden on Competition

The Exchange does not believe that the proposed rule change will impose any burden on competition that is not necessary or appropriate in furtherance of the purposes of the Act. The Exchange does not believe that the proposal raises any competitive issues because it simply assures that interest that is entered before Core Trading Hours and that is designated for the Core Trading Session or the Market Order Auction, and thus are [sic] not eligible to execute in the Opening Session, would not be rejected based on an NBB or NBO at the time of arrival.

C. Self-Regulatory Organization's Statement on Comments on the Proposed Rule Change Received From Members, Participants, or Others

No written comments were solicited or received with respect to the proposed rule change.

III. Date of Effectiveness of the Proposed Rule Change and Timing for Commission Action

The Exchange has filed the proposed rule change pursuant to Section 19(b)(3)(A)(iii) of the Act[7] and Rule 19b–4(f)(6) thereunder.[8] Because the proposed rule change does not: (i) Significantly affect the protection of investors or the public interest; (ii) impose any significant burden on competition; and (iii) become operative prior to 30 days from the date on which it was filed, or such shorter time as the Commission may designate, if consistent with the protection of investors and the public interest, the proposed rule change has become effective pursuant to Section 19(b)(3)(A) of the Act[9] and Rule 19b–4(f)(6) thereunder.[10]

At any time within 60 days of the filing of such proposed rule change, the Commission summarily may temporarily suspend such rule change if it appears to the Commission that such action is necessary or appropriate in the public interest, for the protection of investors, or otherwise in furtherance of the purposes of the Act. If the Commission takes such action, the Commission shall institute proceedings under Section 19(b)(2)(B) of the Act[11] to determine whether the proposed rule change should be approved or disapproved.

IV. Solicitation of Comments

Interested persons are invited to submit written data, views, and arguments concerning the foregoing, including whether the proposed rule change is consistent with the Act. Comments may be submitted by any of the following methods:

Electronic Comments

- Use the Commission's Internet comment form (*http://www.sec.gov/rules/sro.shtml*); or

[4] *See* NYSE Arca Equities Rule 7.34(d)(1)(G)(ii).

[5] *See* Securities Exchange Act Release No. 64847 (July 12, 2011), 76 FR 41844 (July 15, 2011) (SR–NYSEArca-2011–45). The limit order price protection feature also mitigates the potential for clearly erroneous executions to occur.

[6] 15 U.S.C. 78f(b)(5).

[7] 15 U.S.C. 78s(b)(3)(A)(iii).

[8] 17 CFR 240.19b–4(f)(6).

[9] 15 U.S.C. 78s(b)(3)(A).

[10] 17 CFR 240.19b–4(f)(6). As required under Rule 19b–4(f)(6)(iii), the Exchange provided the Commission with written notice of its intent to file the proposed rule change, along with a brief description and the text of the proposed rule change, at least five business days prior to the date of filing of the proposed rule change, or such shorter time as designated by the Commission.

[11] 15 U.S.C. 78s(b)(2)(B).

• Send an email to *rule-comments@sec.gov*. Please include File Number SR–NYSEArca–2014–03 on the subject line.

Paper Comments

• Send paper comments in triplicate to Elizabeth M. Murphy, Secretary, Securities and Exchange Commission, 100 F Street NE., Washington, DC 20549–1090.

All submissions should refer to File Number SR–NYSEArca–2014–03. This file number should be included on the subject line if email is used. To help the Commission process and review your comments more efficiently, please use only one method. The Commission will post all comments on the Commission's Internet Web site (*http://www.sec.gov/rules/sro.shtml*). Copies of the submission, all subsequent amendments, all written statements with respect to the proposed rule change that are filed with the Commission, and all written communications relating to the proposed rule change between the Commission and any person, other than those that may be withheld from the public in accordance with the provisions of 5 U.S.C. 552, will be available for Web site viewing and printing in the Commission's Public Reference Room, 100 F Street NE., Washington, DC 20549, on official business days between the hours of 10:00 a.m. and 3:00 p.m. Copies of the filing also will be available for inspection and copying at the principal office of the Exchange. All comments received will be posted without change; the Commission does not edit personal identifying information from submissions. You should submit only information that you wish to make available publicly. All submissions should refer to File Number SR–NYSEArca–2014–03 and should be submitted on or before February 18, 2014.

For the Commission, by the Division of Trading and Markets, pursuant to delegated authority.[12]

Kevin M. O'Neill,

Deputy Secretary.

[FR Doc. 2014–01512 Filed 1–27–14; 8:45 am]

BILLING CODE 8011–01–P

[12] 17 CFR 200.30–3(a)(12).

SECURITIES AND EXCHANGE COMMISSION

[File No. 500–1]

Order of Suspension of Trading; in the Matter of New Dragon Asia Corp.

January 24, 2014.

It appears to the Securities and Exchange Commission that there is a lack of current and accurate information concerning the securities of New Dragon Asia Corp. because it has not filed any periodic reports since the period ended September 25, 2011.

The Commission is of the opinion that the public interest and the protection of investors require a suspension of trading in the securities of the above-listed company. Therefore, it is ordered, pursuant to Section 12(k) of the Securities Exchange Act of 1934, that trading in the securities of the above-listed company is suspended for the period from 9:30 a.m. EST on January 24, 2014, through 11:59 p.m. EST on February 6, 2014.

By the Commission.

Elizabeth M. Murphy,

Secretary.

[FR Doc. 2014–01677 Filed 1–24–14; 11:15 am]

BILLING CODE 8011–01–P

SECURITIES AND EXCHANGE COMMISSION

[File No. 500–1]

Jinhao Motor Company; Order of Suspension of Trading

January 24, 2014.

It appears to the Securities and Exchange Commission that there is a lack of current and accurate information concerning the securities of Jinhao Motor Company because it has not filed any periodic reports since the period ended September 30, 2010.

The Commission is of the opinion that the public interest and the protection of investors require a suspension of trading in the securities of the above-listed company. Therefore, it is ordered, pursuant to Section 12(k) of the Securities Exchange Act of 1934, that trading in the securities of the above-listed company is suspended for the period from 9:30 a.m. EST on January 24, 2014, through 11:59 p.m. EST on February 6, 2014.

By the Commission.

Elizabeth M. Murphy,

Secretary.

[FR Doc. 2014–01680 Filed 1–24–14; 11:15 am]

BILLING CODE 8011–01–P

SECURITIES AND EXCHANGE COMMISSION

[File No. 500–1]

Advanced Pipe Fitting Technologies Inc., Order of Suspension of Trading

January 24, 2014.

It appears to the Securities and Exchange Commission that there is a lack of current and accurate information concerning the securities of Advanced Pipe Fitting Technologies Inc. because it has not filed any periodic reports since the period ended July 31, 2011.

The Commission is of the opinion that the public interest and the protection of investors require a suspension of trading in the securities of the above-listed company. Therefore, it is ordered, pursuant to Section 12(k) of the Securities Exchange Act of 1934, that trading in the securities of the above-listed company is suspended for the period from 9:30 a.m. EST on January 24, 2014, through 11:59 p.m. EST on February 6, 2014.

By the Commission.

Elizabeth M. Murphy,

Secretary.

[FR Doc. 2014–01681 Filed 1–24–14; 11:15 am]

BILLING CODE 8011–01–P

SOCIAL SECURITY ADMINISTRATION

[Docket No. SSA 2013–0070]

Notice Announcing Addresses for Service of Process

AGENCY: Social Security Administration.

ACTION: Notice announcing addresses for summons and complaints.

SUMMARY: Our Office of the General Counsel (OGC) is responsible for processing and handling summonses and complaints in lawsuits involving judicial review of our final decisions on individual claims for benefits under titles II, VIII, and XVI of the Social Security Act (Act). This notice sets out the names and current addresses of those offices and the jurisdictions for which each office has responsibility.

FOR FURTHER INFORMATION CONTACT: Jeannette Mandycz, Office of the General Counsel, Office of Program Law, Social Security Administration, 6401 Security Boulevard, Baltimore, MD 21235–6404, (410) 965–6471. For information on eligibility or filing for benefits, call our national toll-free number, 1–800–772–1213 or TTY 1–800–325–0778, or visit our Internet site, Social Security Online, at *http://www.socialsecurity.gov.*

SUPPLEMENTARY INFORMATION:

You should mail summonses and complaints in cases involving judicial review of our final decisions on individual claims for benefits under titles II, VIII, and XVI of the Act directly to the OGC location responsible for the jurisdiction in which the complaint has been filed. This notice replaces the notice we published on March 11, 2010 (75 FR 11610), and reflects the current jurisdictional assignments for our Regional Chief Counsels' Offices and our Office of Program Law. This notice reflects changes in the OGC jurisdictional assignments that take effect for civil actions filed on or after January 1, 2014. The jurisdictional responsibilities, names, and addresses of our OGC offices are as follows:

Alabama

U.S. District Court—Middle District of Alabama: Office of the Regional Chief Counsel, Atlanta (Region IV).

U.S. District Court—Northern District of Alabama: Office of the Regional Chief Counsel, Atlanta (Region IV).

U.S. District Court—Southern District of Alabama: Office of Program Law, Baltimore

Alaska

U.S. District Court—Alaska: Office of the Regional Chief Counsel, Seattle (Region X).

Arizona

U.S. District Court—Arizona: Office of the Regional Chief Counsel, Seattle (Region X).

Arkansas

U.S. District Court—Eastern District of Arkansas: Office of the Regional Chief Counsel, Dallas (Region VI).

U.S. District Court—Western District of Arkansas: Office of the Regional Chief Counsel, Dallas (Region VI).

California

U.S. District Court—Central District of California: Office of the Regional Chief Counsel, San Francisco (Region IX).

U.S. District Court—Eastern District of California: Office of the Regional Chief Counsel, San Francisco (Region IX).

U.S. District Court—Northern District of California: Office of the Regional Chief Counsel, San Francisco (Region IX).

U.S. District Court—Southern District of California: Office of the Regional Chief Counsel, San Francisco (Region IX).

Colorado

U.S. District Court—Colorado: Office of the Regional Chief Counsel, Denver (Region VIII).

Connecticut

U.S. District Court—Connecticut: Office of the Regional Chief Counsel, New York (Region II).

Delaware

U.S. District Court—Delaware: Office of the Regional Chief Counsel, Philadelphia (Region III).

District of Columbia

U.S. District Court—District of Columbia: Office of the Regional Chief Counsel, Philadelphia (Region III).

Florida

U.S. District Court—Middle District of Florida: Office of the Regional Chief Counsel, Atlanta (Region IV).

U.S. District Court—Northern District of Florida: Office of the Regional Chief Counsel, Atlanta (Region IV).

U.S. District Court—Southern District of Florida: Office of the Regional Chief Counsel, Atlanta (Region IV).

Georgia

U.S. District Court—Middle District of Georgia: Office of the Regional Chief Counsel, Atlanta (Region IV).

U.S. District Court—Northern District of Georgia: Office of the Regional Chief Counsel, Atlanta (Region IV).

U.S. District Court—Southern District of Georgia: Office of the Regional Chief Counsel, Atlanta (Region IV).

Guam

U.S. District Court—Guam: Office of the Regional Chief Counsel, San Francisco (Region IX).

Hawaii

U.S. District Court—Hawaii: Office of the Regional Chief Counsel, San Francisco (Region IX).

Idaho

U.S. District Court—Idaho: Office of the Regional Chief Counsel, Seattle (Region X).

Illinois

U.S. District Court—Central District of Illinois: Office of the Regional Chief Counsel, Chicago (Region V).

U.S. District Court—Northern District of Illinois: Office of the Regional Chief Counsel, Chicago (Region V).

U.S. District Court—Southern District of Illinois: Office of the Regional Chief Counsel, Chicago (Region V).

Indiana

U.S. District Court—Northern District of Indiana: Office of the Regional Chief Counsel, Chicago (Region V).

U.S. District Court—Southern District of Indiana: Office of the Regional Chief Counsel, Chicago (Region V).

Iowa

U.S. District Court—Northern District of Iowa: Office of the Regional Chief Counsel, Dallas (Region VI).

U.S. District Court—Southern District of Iowa: Office of the Regional Chief Counsel, Dallas (Region VI).

Kansas

U.S. District Court—Kansas: Office of the Regional Chief Counsel, Denver (Region VIII).

Kentucky

U.S. District Court—Eastern District of Kentucky: Office of the Regional Chief Counsel, Denver (Region VIII).

U.S. District Court—Western District of Kentucky: Office of the Regional Chief Counsel, Chicago (Region V).

Louisiana

U.S. District Court—Eastern District of Louisiana: Office of the Regional Chief Counsel, Dallas (Region VI).

U.S. District Court—Middle District of Louisiana: Office of the Regional Chief Counsel, Dallas (Region VI).

U.S. District Court—Western District of Louisiana: Office of the Regional Chief Counsel, Dallas (Region VI).

Maine

U.S. District Court—Maine: Office of the Regional Chief Counsel, Boston (Region I).

Maryland

U.S. District Court—Maryland: Office of Program Law, Baltimore.

Massachusetts

U.S. District Court—Massachusetts: Office of the Regional Chief Counsel, Boston (Region I).

Michigan

U.S. District Court—Eastern District of Michigan: Office of the Regional Chief Counsel, Boston (Region I).

U.S. District Court—Western District of Michigan: Office of the Regional Chief Counsel, Boston (Region I).

Minnesota

U.S. District Court—Minnesota: Office of the Regional Chief Counsel, Dallas (Region VI).

Mississippi

U.S. District Court—Northern District of Mississippi: Office of the Regional Chief Counsel, Dallas (Region VI).

U.S. District Court—Southern District of Mississippi: Office of the Regional Chief Counsel, Dallas (Region VI).

Missouri

U.S. District Court—Eastern District of Missouri: Office of the Regional Chief Counsel, Kansas City (Region VII).

U.S. District Court—Western District of Missouri: Office of the Regional Chief Counsel, Kansas City (Region VII).

Montana

U.S. District Court—Montana: Office of the Regional Chief Counsel, Seattle (Region X).

Nebraska

U.S. District Court—Nebraska: Office of the Regional Chief Counsel, Dallas (Region VI).

Nevada

U.S. District Court—Nevada: Office of the Regional Chief Counsel, San Francisco (Region IX).

New Hampshire

U.S. District Court—New Hampshire: Office of the Regional Chief Counsel, Boston (Region I).

New Jersey

U.S. District Court—New Jersey: Office of the Regional Chief Counsel, Philadelphia (Region III).

New Mexico

U.S. District Court—New Mexico: Office of the Regional Chief Counsel, Denver (Region VIII).

New York

U.S. District Court—Eastern District of New York: Office of the Regional Chief Counsel, New York (Region II).

U.S. District Court—Northern District of New York: Office of the Regional Chief Counsel, New York (Region II).

U.S. District Court—Southern District of New York: Office of the Regional Chief Counsel, New York (Region II).

U.S. District Court—Western District of New York: Office of the Regional Chief Counsel, New York (Region II).

North Carolina

U.S. District Court—Eastern District of North Carolina: Office of Program Law, Baltimore.

U.S. District Court—Middle District of North Carolina: Office of the Regional Chief Counsel, Philadelphia (Region III).

U.S. District Court—Western District of North Carolina: Office of Program Law, Baltimore.

North Dakota

U.S. District Court—North Dakota: Office of the Regional Chief Counsel, Dallas (Region VI).

Northern Mariana Islands

U.S. District Court—Northern Mariana Islands: Office of the Regional Chief Counsel, San Francisco (Region IX).

Ohio

U.S. District Court—Northern District of Ohio: Office of the Regional Chief Counsel, Chicago (Region V).

U.S. District Court—Southern District of Ohio: Office of the Regional Chief Counsel, Chicago (Region V).

Oklahoma

U.S. District Court—Eastern District of Oklahoma: Office of the Regional Chief Counsel, Denver (Region VIII).

U.S. District Court—Northern District of Oklahoma: Office of the Regional Chief Counsel, Denver (Region VIII).

U.S. District Court—Western District of Oklahoma: Office of the Regional Chief Counsel, Denver (Region VIII).

Oregon

U.S. District Court—Oregon: Office of the Regional Chief Counsel, Seattle (Region X).

Pennsylvania

U.S. District Court—Eastern District of Pennsylvania: Office of the Regional Chief Counsel, Philadelphia (Region III).

U.S. District Court—Middle District of Pennsylvania: Office of the Regional Chief Counsel, Philadelphia (Region III).

U.S. District Court—Western District of Pennsylvania: Office of the Regional Chief Counsel, Philadelphia (Region III).

Puerto Rico

U.S. District Court—Puerto Rico: Office of the Regional Chief Counsel, New York (Region II).

Rhode Island

U.S. District Court—Rhode Island: Office of the Regional Chief Counsel, Boston (Region I).

South Carolina

U.S. District Court—South Carolina: Office of the Regional Chief Counsel, Philadelphia (Region III).

South Dakota

U.S. District Court—South Dakota: Office of the Regional Chief Counsel, Dallas (Region VI).

Tennessee

U.S. District Court—Eastern District of Tennessee: Office of the Regional Chief Counsel, Kansas City (Region VII).

U.S. District Court—Middle District of Tennessee: Office of the Regional Chief Counsel, Kansas City (Region VII).

U.S. District Court—Western District of Tennessee: Office of the Regional Chief Counsel, Kansas City (Region VII).

Texas

U.S District Court—Eastern District of Texas: Office of the Regional Chief Counsel, Dallas (Region VI).

U.S. District Court—Northern District of Texas: Office of the Regional Chief Counsel, Dallas (Region VI).

U.S. District Court—Southern District of Texas: Office of the Regional Chief Counsel, Dallas (Region VI).

U.S. District Court—Western District of Texas: Office of the Regional Chief Counsel, Dallas (Region VI).

Utah

U.S. District Court—Utah: Office of the Regional Chief Counsel, Denver (Region VIII).

Vermont

U.S. District Court—Vermont: Office of the Regional Chief Counsel, New York (Region II).

Virgin Islands

U.S. District Court—Virgin Islands: Office of the Regional Chief Counsel, New York (Region II).

Virginia

U.S. District Court—Eastern District of Virginia: Office of the Regional Chief Counsel, Philadelphia (Region III).

U.S. District Court—Western District of Virginia: Office of the Regional Chief Counsel, Philadelphia (Region III).

Washington

U.S. District Court—Eastern District of Washington: Office of the Regional Chief Counsel, Seattle (Region X).

U.S. District Court—Western District of Washington: Office of the Regional Chief Counsel, Seattle (Region X).

West Virginia

U.S. District Court—Northern District of West Virginia: Office of the Regional Chief Counsel, Philadelphia (Region III).

U.S. District Court—Southern District of West Virginia: Office of the Regional Chief Counsel, Philadelphia (Region III).

Wisconsin

U.S. District Court—Eastern District of Wisconsin: Office of the Regional Chief Counsel, Chicago (Region V).

U.S. District Court—Western District of Wisconsin: Office of the Regional Chief Counsel, Chicago (Region V).

Wyoming

U.S. District Court—Wyoming: Office of the Regional Chief Counsel, Denver (Region VIII).

Addresses of OGC Offices

Office of Program Law, Office of the General Counsel, Social Security

Administration, 6401 Security Boulevard, Altmeyer Building, Room 617, Baltimore, MD 21235–6401

Office of the Regional Chief Counsel, Region I, Social Security Administration, JFK Federal Building, Room 625, 15 New Sudbury Street, Boston, MA 02203–0002

Office of the Regional Chief Counsel, Region II, Social Security Administration, 26 Federal Plaza, Room 3904, New York, NY 10278–0004

Office of the Regional Chief Counsel, Region III, Social Security Administration, 300 Spring Garden Street, 6th Floor, Philadelphia, PA 19123–2932

Office of the Regional Chief Counsel, Region IV, Social Security Administration, Sam Nunn Atlanta Federal Center, 61 Forsyth Street, SW., Suite 20T45, Atlanta, GA 30303–8910

Office of the Regional Chief Counsel, Region V, Social Security Administration, 200 West Adams Street, 30th Floor, Chicago, IL 60606–5208

Office of the Regional Chief Counsel, Region VI, Social Security Administration, 1301 Young Street, Ste. A–702, Dallas, TX 75202–5433

Office of the Regional Chief Counsel, Region VII, Social Security Administration, Richard Bolling Federal Building, 601 E. 12th Street, Room 965, Kansas City, MO 64106–2898

Office of the Regional Chief Counsel, Region VIII, Social Security Administration, 1961 Stout Street, Suite 4169, Denver, CO 80294–4003

Office of the Regional Chief Counsel, Region IX, Social Security Administration, 160 Spear Street, Suite 800, San Francisco, CA 94105–1545

Office of the Regional Chief Counsel, Region X, Social Security Administration, 701 Fifth Avenue, Suite 2900 M/S 221A, Seattle, WA 98104–7075

Dated: January 21, 2014.

Carolyn W. Colvin,

Acting Commissioner of Social Security.

[FR Doc. 2014–01532 Filed 1–27–14; 8:45 am]

BILLING CODE 4191–02–P

DEPARTMENT OF STATE

[Public Notice 8610]

Provision of Certain Temporary and Limited Sanctions Relief in Order To Implement the Joint Plan of Action of November 24, 2013 Between the P5+1 and the Islamic Republic of Iran

AGENCY: Department of State.

ACTION: Notice.

SUMMARY: On November 24, 2013, the United States and its partners in the P5+1—France, the United Kingdom, Russia, China, and Germany—reached an initial understanding with Iran that halts progress on its nuclear program and rolls it back in key respects. In return, the P5+1 committed to provide limited, temporary, and targeted sanctions relief to Iran. This Notice outlines the U.S. Government (USG) actions taken to implement the sanctions relief aspects of this understanding.

DATES: *Effective Date:* The effective dates of these waiver actions are as described in the determinations set forth below.

FOR FURTHER INFORMATION CONTACT: On general issues: John Hughes, Office of Economic Sanctions Policy and Implementation, Department of State, Telephone: (202) 647–7489.

SUPPLEMENTARY INFORMATION: On November 24, 2013, the P5+1 (China, France, Germany, Russia, the United States, and the United Kingdom, coordinated by EU High Representative Catherine Ashton) reached an initial understanding with Iran, outlined in a Joint Plan of Action (JPOA), that halts progress on Iran's nuclear program and rolls it back in key respects. The JPOA includes the first meaningful limits Iran has accepted on its nuclear program in close to a decade. In return for important steps to constrain Iran's nuclear program, the P5+1 committed to provide Iran with limited, temporary, and targeted sanctions relief for a period of six months, starting on January 20, 2014, and concluding on July 20, 2014 (the ''JPOA period'').

The sanctions relief specified in the JPOA focuses on a limited number of commercial activities and associated services for: Iran's exports of petrochemical products; Iran's purchase and sale of gold and precious metals; the provision of goods and services to Iran's automotive sector; and the licensing of safety-of-flight inspections and repairs for Iranian civil aviation. The sanctions relief also pauses efforts to further reduce Iran's crude oil exports, enabling the current importers of Iranian crude oil—China, Japan, South Korea, India, Turkey, and Taiwan—to maintain purchases at current average levels during the JPOA period. (The purchase of Iranian crude oil by entities in jurisdictions outside of China, Japan, South Korea, India, Turkey, and Taiwan remains sanctionable under U.S. law.) Iran will also gain access, in installments, to $4.2 billion of its restricted revenues now held in overseas accounts. Finally, Iran and the P5+1 have committed to establish a financial channel to facilitate Iran's import of certain humanitarian goods, the payment of medical expenses incurred by Iranians overseas, payments of Iran's UN obligations, and up to $400 million toward university tuition for Iranian students studying abroad.

To implement this limited sanctions relief, the U.S. government has executed temporary, partial waivers of certain statutory sanctions and has issued guidance regarding the suspension of sanctions under relevant Executive Orders and regulations. Because some of the waivers have a duration less than the six-month period of the JPOA, the USG plans to take such additional actions as may be necessary to extend this limited sanctions relief to July 20, 2014.

All U.S. sanctions not explicitly waived or suspended through these actions remain fully in force. Furthermore, U.S. persons and foreign entities owned or controlled by U.S. persons (''U.S.-owned or -controlled foreign entities'') continue to be generally prohibited from conducting transactions with Iran, including any transactions of the types permitted pursuant to the JPOA, unless licensed to do so by OFAC. The U.S. government will continue to enforce U.S. sanctions laws and regulations against those who engage in sanctionable activities that are not covered by the suspensions and temporary waivers announced on January 20, 2014.

Acting under the authorities vested in me as Secretary of State, including through the applicable delegations of authority, I hereby make the following determinations and certifications:

Pursuant to Sections 1244(i), 1245 (g), 1246(e), and 1247(f) of the Iran Freedom and Counter-Proliferation Act of 2012 (subtitle D of title XII of Public Law 112–239, 22 U.S.C. 8801 *et seq.*) (IFCA), I determine that it is vital to the national security of the United States to waive the imposition of sanctions pursuant to:

1. Section 1244(c)(1) of IFCA [1] to the extent required for:

[1] Pursuant to section 1244(c)(2)(C)(iii) of IFCA, the relevant sanction in Section 1244(c)(1)

a. Transactions by non-U.S. persons for the export from Iran of petrochemical products,[2] and for associated services, excluding any transactions involving persons on the list of specially designated nationals and blocked persons of the Office of Foreign Assets Control (OFAC) of the U.S. Department of the Treasury (hereinafter the SDN List) except for the following companies: Bandar Imam Petrochemical Company; Bou Ali Sina Petrochemical Company; Ghaed Bassir Petrochemical Products Company; Iran Petrochemical Commercial Company; Jam Petrochemical Company; Marjan Petrochemical Company; Mobin Petrochemical Company; National Petrochemical Company; Nouri Petrochemical Company; Pars Petrochemical Company; Sadaf Petrochemical Assaluyeh Company; Shahid Tondgooyan Petrochemical Company; Shazand Petrochemical Company; and Tabriz Petrochemical Company;

b. Transactions by U.S. or non-U.S. persons for the supply and installation of spare parts necessary for the safety of flight for Iranian civil aviation, for safety-related inspections and repairs in Iran, and for associated services, provided that OFAC has issued any required licenses, excluding any transactions involving persons on the SDN List except for Iran Air;

c. Transactions by non-U.S. persons to which sanctions would not apply if an exception under section 1244(g)(2) of IFCA were applied to China, India, Japan, the Republic of Korea, Taiwan, and Turkey, and for insurance and transportation services associated with such transactions, provided that such transactions are consistent with the purchase amounts provided for in the Joint Plan of Action of November 24, 2013, excluding any transactions or associated services involving persons on the SDN List except for the National Iranian Oil Company and the National Iranian Tanker Company;

d. Transactions by non-U.S. persons for the sale, supply or transfer to or from Iran of precious metals, provided that such transactions are within the scope of the waiver of Sections 1245(a)(1)(A) and 1245(c) of IFCA (section 3 below), and for associated services, excluding any transactions involving persons on the SDN List except for any political subdivision, agency, or instrumentality of the Government of Iran listed solely pursuant to E.O. 13599;

2. Section 1244(d) of IFCA to the extent required for the sale, supply or transfer of goods or services by non-U.S. persons in connection with transactions by non-U.S. persons to which sanctions would not apply if an exception under section 1244(g)(2) of IFCA were applied to China, India, Japan, the Republic of Korea, Taiwan, and Turkey, and for insurance and transportation services associated with such transactions, provided that such transactions are consistent with the purchase amounts provided for in the Joint Plan of Action of November 24, 2013, excluding any transactions or associated services involving persons on the SDN List except for the National Iranian Oil Company and the National Iranian Tanker Company;

3. Sections 1245(a)(1)(A) and 1245(c) of IFCA to the extent required for transactions by non-U.S. persons for the sale, supply, or transfer to or from Iran of precious metals, provided that:

a. Such transactions do not involve persons on the SDN List, except for any political subdivision, agency, or instrumentality of the Government of Iran listed solely pursuant to E.O. 13599 or any Iranian depository institution listed solely pursuant to E.O. 13599; and

b. This waiver shall not apply to transactions for the sale, supply, or transfer to Iran of precious metals involving funds credited to an account located outside Iran pursuant to Section 1245(d)(4)(D)(ii)(II) of the National Defense Authorization Act for Fiscal Year 2012;

4. Section 1246(a) of IFCA [3] to the extent required for the provision of underwriting services or insurance or reinsurance:

a. By non-U.S. persons for the export from Iran of petrochemical products and for associated services, excluding any transactions involving persons on the SDN List except for the following companies: Bandar Imam Petrochemical Company; Bou Ali Sina Petrochemical Company; Ghaed Bassir Petrochemical Products; Iran Petrochemical Commercial Company; Jam Petrochemical Company; Marjan Petrochemical Company; Mobin Petrochemical Company; National Petrochemical Company; Nouri Petrochemical Company; Pars Petrochemical Company; Sadaf Petrochemical Assaluyeh Company; Shahid Tondgooyan Petrochemical Company; Shazand Petrochemical Company; and Tabriz Petrochemical Company;

b. By U.S. persons or non-U.S. persons for the supply and installation of spare parts necessary for the safety of flight for Iranian civil aviation, for safety-related inspections and repairs in Iran, and for associated services, provided that OFAC has issued any required licenses, excluding any transactions involving persons on the SDN List except for Iran Air;

c. By non-U.S. persons for transactions to which sanctions would not apply if an exception under section 1244(g)(2) of IFCA were applied to China, India, Japan, the Republic of Korea, Taiwan, and Turkey, and for insurance and transportation services associated with such transactions, provided that such transactions are consistent with the purchase amounts provided for in the Joint Plan of Action of November 24, 2013, excluding any transactions or associated services involving persons on the SDN List except for the National Iranian Oil Company and the National Iranian Tanker Company; and

d. By non-U.S. persons for the sale, supply or transfer to or from Iran of precious metals, provided that such transactions are within the scope of the waiver of Sections 1245(a)(1)(A) and 1245(c) of IFCA, and for associated services, excluding any transactions involving persons on the SDN List except for any political subdivision, agency, or instrumentality of the Government of Iran listed solely pursuant to E.O. 13599;

e. By non-U.S. persons for the sale, supply or transfer to Iran of goods and services used in connection with the automotive sector of Iran and for associated services, excluding any transactions involving persons on the SDN List.

5. Section 1247(a) of IFCA [4] to the extent required for transactions by foreign financial institutions on behalf of:

a. Bandar Imam Petrochemical Company; Bou Ali Sina Petrochemical

continues not to apply, by its terms, in the case of Iranian financial institutions that have not been designated for the imposition of sanctions in connection with Iran's proliferation of weapons of mass destruction or delivery systems for weapons of mass destruction, support for international terrorism, or abuses of human rights (as described in section 1244(c)(3)).

[2] 77 FR 67726–67731 (Nov. 13, 2012).

[3] Pursuant to section 1246(a)(1)(C) of IFCA, the relevant sanction in section 1246(a)(1) continues not to apply, by its terms, in the case of Iranian financial institutions that have not been designated for the imposition of sanctions in connection with Iran's proliferation of weapons of mass destruction or delivery systems for weapons of mass destruction, support for international terrorism, or abuses of human rights (as described in section 1246(b)).

[4] Pursuant to section 1247(a) of IFCA, the relevant sanction in section 1247(a) still continues not to apply, by its terms, in the case of Iranian financial institutions that have not been designated for the imposition of sanctions in connection with Iran's proliferation of weapons of mass destruction or delivery systems for weapons of mass destruction, support for international terrorism, or abuses of human rights (as described in section 1247(b)).

Company; Ghaed Bassir Petrochemical Products; Iran Petrochemical Commercial Company; Jam Petrochemical Company; Marjan Petrochemical Company; Mobin Petrochemical Company; National Petrochemical Company; Nouri Petrochemical Company; Pars Petrochemical Company; Shahid Tondgooyan Petrochemical Company; Sadaf Petrochemical Assaluyeh Company; Shahid Tondgooyan Petrochemical Company; Shazand Petrochemical Company; and Tabriz Petrochemical Company for the export from Iran of petrochemicals;

b. Iran Air for the supply and installation of spare parts necessary for the safety of flight by Iran Air and for safety-related inspections and repairs for Iran Air, provided that OFAC has issued any required licenses;

c. The National Iranian Oil Company and the National Iranian Tanker Company for transactions by non-U.S. persons to which sanctions would not apply if an exception under section 1244(g)(2) of IFCA were applied to China, India, Japan, the Republic of Korea, Taiwan, and Turkey, provided that such transactions are consistent with the purchase amounts provided for in the Joint Plan of Action of November 24, 2013, excluding any transactions or associated services involving any other persons on the SDN List; and

d. Any political subdivision, agency, or instrumentality of the Government of Iran listed solely pursuant to E.O. 13599 for the sale, supply or transfer to or from Iran of precious metals, provided that such transactions are within the scope of the waiver of Sections 1245(a)(1)(A) and 1245(c) of IFCA.

Pursuant to section 1245(d)(5) of the National Defense Authorization Act for Fiscal Year 2012, I determine that it is in the national security interest of the United States to waive the imposition of sanctions under Section 1245(d)(1) with respect to:

(1) Foreign financial institutions under the primary jurisdiction of China, India, Japan, the Republic of Korea, the authorities on Taiwan, and Turkey, subject to the following conditions:

a. This waiver shall apply to a financial transaction only for trade in goods and services between Iran and the country with primary jurisdiction over the foreign financial institution involved in the financial transaction (but shall not apply to any transaction for the sale, supply, or transfer to Iran of precious metals involving funds credited to an account described in paragraph (b));

b. Any funds owed to Iran as a result of such trade shall be credited to an account located in the country with primary jurisdiction over the foreign financial institution involved in the financial transaction; and

c. With the exception that certain foreign financial institutions notified directly in writing by the U.S. Government may engage in financial transactions with the Central Bank of Iran in connection with the repatriation of revenues and the establishment of a financial channel, to the extent specifically provided for in the Joint Plan of Action of November 24, 2013; and

(2) Foreign financial institutions under the primary jurisdiction of Switzerland that are notified directly in writing by the U.S. Government, to the extent necessary for such foreign financial institutions to engage in financial transactions with the Central Bank of Iran in connection with the repatriation of revenues and the establishment of a financial channel as specifically provided for in the Joint Plan of Action of November 24, 2013.

Pursuant to Section 302(e) of the Iran Threat Reduction and Syria Human Rights Act of 2012 (Public Law 112–158) (TRA), I determine that it would cause damage to the national security of the United States to identify or designate a foreign person under section 302(a) of TRA in connection with transactions by non-U.S. persons with the National Iranian Oil Company to which sanctions would not apply if an exception under section 1244(g)(2) of IFCA were applied to China, India, Japan, the Republic of Korea, Taiwan, and Turkey, and for insurance and transportation services associated with such transactions, provided that such transactions are consistent with the purchase amounts provided for in the Joint Plan of Action of November 24, 2013.

Pursuant to Section 4(c)(1)(A) of the Iran Sanctions Act of 1996 (Pub. L. 104–172, 50 U.S.C. 1701 note) (ISA), I certify that it is vital to the national security interests of the United States to waive the application of section 5(a)(7) of ISA to the National Iranian Oil Company and the National Iranian Tanker Company to the extent required for insurance and transportation services provided on or after the date of transmittal of this certification to the appropriate congressional committees and associated with transactions to which sanctions would not apply if an exception under section 1244(g)(2) of IFCA were applied to China, India, Japan, the Republic of Korea, Taiwan, and Turkey, provided that such transactions are consistent with the purchase amounts provided for in the Joint Plan of Action of November 24, 2013.

These waivers shall take effect upon their transmittal to Congress, unless otherwise provided in the relevant provision of law.

(Signed John F. Kerry, Secretary of State)

Therefore, these sanctions have been waived as described in the determinations above. Relevant agencies and instrumentalities of the United States Government shall take all appropriate measures within their authority to carry out the provisions of this notice.

Dated: January 22, 2014.

William E. Craft,

Acting Assistant Secretary for Economic and Business Affairs.

[FR Doc. 2014–01580 Filed 1–27–14; 8:45 am]

BILLING CODE 4710–07–P

OFFICE OF THE UNITED STATES TRADE REPRESENTATIVE

Invitation for Applications for Inclusion on the Dispute Settlement Rosters for U.S.-Panama Trade Promotion Agreement

AGENCY: Office of the United States Trade Representative (''USTR'').

ACTION: Invitation for applications.

SUMMARY: The United States-Panama Trade Promotion Agreement (the ''Agreement'') calls for the Parties to establish four rosters of individuals that would be available to serve as panelists in dispute settlement proceedings arising under the Agreement. A general roster is required to be established under Chapter Twenty (Dispute Settlement). Chapter Twelve (Financial Services), Chapter Sixteen (Labor), and Chapter Seventeen (Environment) require the establishment of separate rosters for disputes arising under those chapters. USTR is inviting interested persons to apply to be on any of the rosters under the Agreement, as indicated below.

DATES: Applications should be received no later than March 14, 2014 to be assured of consideration.

ADDRESSES: Applications should be submitted electronically to *www.regulations.gov,* docket number USTR–2014–0002. If you are unable to submit an application using *www.regulations.gov,* please contact Sandy McKinzy at (202) 395–9483 to arrange for an alternative method of transmission.

FOR FURTHER INFORMATION CONTACT: For information regarding the form of the

application, contact Sandy McKinzy, Legal Technician, USTR Office of Monitoring and Enforcement, at (202) 395–3582. For other inquiries, contact Greta Peisch, Assistant General Counsel, at (202) 395–3150.

SUPPLEMENTARY INFORMATION: USTR is seeking applications from interested persons to serve on one or more of the rosters under the Agreement. The details for how to apply are provided below as is a short description of the rosters. In response to this notice, USTR will accept applications from U.S. citizens and nationals of other countries.

Dispute Settlement Mechanism of the Agreement

The Agreement is a bilateral agreement in force between the United States and Panama. Chapter 20 of the Agreement sets out detailed procedures for the resolution of disputes arising under the Agreement. Dispute settlement involves three stages: (1) Consultations between the Parties to try to arrive at a mutually satisfactory resolution of the matter; (2) efforts by the Free Trade Commission, comprising cabinet-level representatives from the United States and Panama, to resolve the matter; and (3) resort to an arbitral panel to make a determination regarding the matter at issue between the Parties. The panel is composed of three individuals normally chosen by the Parties, or selected by lot, from a roster.

The Agreement requires the Parties to establish a roster of up to twenty individuals who are willing and able to serve as panelists. The roster is to include up to seven individuals who are nationals of each Party and up to six individuals who are not nationals of either Party. Individuals on the roster are appointed by agreement of the Parties for a minimum term of three years, and remain on the list until the Parties form a new roster. See Article 20.7.1 of the Agreement.

The Agreement provides for the Parties to agree on a chair and then for each party to select one panelist, normally from the roster. If the Parties are unable to agree on a chair within 15 days, the chair is selected by lot from among roster members who are not nationals of a Party. Similarly, if a Party fails to select a panelist within 15 days of selection of the chair, the panelist is selected by lot from among the roster members who are nationals of the Party. Accordingly, applications are sought from applicants who are nationals of the United States, Panama, or any non-Party country.

The text of the Agreement can be found on the USTR Web site (*http://www.ustr.gov/uspanamatpa*).

Criteria for Eligibility for Inclusion on the Roster

To qualify for inclusion on the roster, an applicant must: (1) Be objective, reliable, and possess sound judgment; (2) have expertise or experience in law, international trade, other matters covered by the Agreement, or the resolution of disputes arising under international trade agreements; (3) be independent of, and not be affiliated with or take instructions from, either Party; and (4) comply with a code of conduct established by the Parties.

Procedures for Selection of Members of the Rosters

An interagency committee chaired by USTR prepares a preliminary list of candidates eligible for inclusion on the rosters. After consultation with the Committee on Ways and Means of the House of Representatives and the Committee on Finance of the Senate, USTR selects the final list of individuals that the United States will nominate for inclusion on the rosters. The members of the rosters are appointed by agreement of the Parties to the Agreement.

Applications

Eligible individuals who wish to be considered for inclusion on one or more of the rosters are invited to submit applications. However, eligible individuals who have submitted a prior application for one or more lists under the Dominican Republic-Central America-United States Free Trade Agreement (''CAFTA–DR''), chapter 20 of the North American Free Trade Agreement (''NAFTA''), the United States-Peru Trade Promotion Agreement, the United States-Australia Free Trade Agreement (''USAFTA''), the United States-Colombia Trade Promotion Agreement (''USCTPA''), the United States-Korea Free Trade Agreement (''KORUS''), the United States-Morocco Free Trade Agreement (''USMFTA''), or the United States-Singapore Free Trade Agreement (''USSFTA'') in response to the **Federal Register** notices of January 28, 2010 (75 FR 4607) or June 25, 2012 (77 FR 37948) have the option as explained below of simply indicating that they would like their application also to include the United States-Panama TPA and submitting updates (if any) to their applications on file.

Applications must be typewritten, and should be headed ''Application for Inclusion on a U.S.-Panama TPA Roster.'' Applicants must specify for which of the four rosters they wish to be considered: General, Financial Services, Labor, or Environment. Applicants may specify more than one roster. Applications should include the following information, and each section of the application should be numbered as indicated:

1. Name of the applicant.
2. Business address, telephone number, fax number, and email address.
3. Citizenship(s).
4. Current employment, including title, description of responsibility, and name and address of employer.
5. Relevant education and professional training.
6. Fluency in any relevant language other than English, written and spoken.
7. Post-education employment history, including the dates and addresses of each prior position and a summary of responsibilities.
8. Relevant professional affiliations and certifications, including, if any, current bar memberships in good standing.
9. A list and copies of publications, testimony, and speeches, if any, concerning the relevant area(s) of expertise. Judges or former judges should list relevant judicial decisions. Only one copy of publications, testimony, speeches, and decisions need be submitted.
10. A list of international trade proceedings or domestic proceedings relating to international trade matters or other relevant matters in which the applicant has provided advice to a party or otherwise participated.
11. Summary of any current and past employment by, or consulting or other work for, the Government of the United States or the Government of Panama.
12. The names and nationalities of all foreign principals for whom the applicant is currently or has previously been registered pursuant to the Foreign Agents Registration Act, 22 U.S.C. 611 *et seq.,* and the dates of all registration periods.
13. A short statement of qualifications and availability for service on dispute settlement panels under the Agreement, including information relevant to the applicant's familiarity with international trade law and relevant area(s) for the roster for which the applicant seeks to be considered, and willingness and ability to make time commitments necessary for service on panels.
14. On a separate page, the names, addresses, telephone and fax numbers of three individuals willing to provide information concerning the applicant's qualifications for service, including the

applicant's character, reputation, reliability, judgment, and familiarity with the relevant area of expertise.

Prior Applicants

As indicated above, an individual who has submitted an application in response to the **Federal Register** notices of January 28, 2010 (75 FR 4607) or June 25, 2012 (77 FR 37948) need only indicate that the individual is interested in having their application also include the Agreement, specify under which of the two **Federal Register** notices the individual had previously submitted an application, and submit updates (if any) to the individual's application(s) on file.

Public Disclosure

Applications normally will not be subject to public disclosure and will not be posted publicly on *www.regulations.gov.* Applications may be shared with other agencies, the Committee on Ways and Means of the House of Representatives, the Committee on Finance of the Senate, and the Government of Panama for their consideration in determining whether to appoint persons to the relevant roster.

False Statements

False statements by an applicant regarding his or her personal or professional qualifications, or financial or other relevant interests that bear on the applicant's suitability for placement on a roster or appointment to a panel are subject to criminal sanctions under 18 U.S.C. 1001.

Privacy Act

The following statements are made in accordance with the Privacy Act of 1974, as amended (5 U.S.C. 552a). Provision of the information requested above is voluntary; however, failure to provide the information will preclude consideration as a candidate for inclusion on a list. This information is maintained in a system of records entitled ''Dispute Settlement Panelists Roster.'' Notice regarding this system of records was published in the **Federal Register** on November 30, 2001 (66 FR 59837). The information provided is needed, and will be used by USTR, other federal government trade policy officials concerned with dispute settlement under the Agreement, and officials of the Panama to select well-qualified individuals for inclusion on the rosters and for service on dispute settlement panels.

Daniel E. Brinza,

Senior Counsel for Dispute Settlement.

[FR Doc. 2014–01099 Filed 1–27–14; 8:45 am]

BILLING CODE 3290–F4–P

DEPARTMENT OF TRANSPORTATION

Office of the Secretary

Notice of Applications for Certificates of Public Convenience and Necessity and Foreign Air Carrier Permits Filed Under Subpart B (Formerly Subpart Q) During the Week Ending December 21, 2013

The following Applications for Certificates of Public Convenience and Necessity and Foreign Air Carrier Permits were filed under Subpart B (formerly Subpart Q) of the Department of Transportation's Procedural Regulations (See 14 CFR 301.201 *et seq.*). The due date for Answers, Conforming Applications, or Motions to Modify Scope are set forth below for each application. Following the Answer period DOT may process the application by expedited procedures. Such procedures may consist of the adoption of a show-cause order, a tentative order, or in appropriate cases a final order without further proceedings.

Docket Number: DOT–OST–2006–24190.

Date Filed: December 20, 2013.

Due Date for Answers, Conforming Applications, or Motion to Modify Scope: January 10, 2014.

Description: Application of ACM AIR CHARTER Luftfahrtgesellschaft mbH (''AMC'') requesting issuance of an exemption and an amended foreign air carrier permit authorizing AMC to engage in the following, without limitation as to the size of aircraft that may be used: (i) Foreign charter air transportation of persons, property and mail from any point or points behind any Member State of the European Union, via any point or points in any EU Member State and via intermediate points, to any point or points in the United States and beyond; (ii) foreign charter air transportation of persons, property and mail between any point or points in the United States and any point or points in any member of the European Common Aviation Area; (iii) foreign charter air transportation of cargo between any point or points in the United States and any other point or points; (iv) other charters pursuant to the prior approval requirements; and (v) charter transportation authorized by any additional route rights made available to European Union carriers in the future, to the extent permitted by ACM'S homeland license on file with the Department.

Barbara J. Hairston,

Supervisory Dockets Officer, Docket Operations, Federal Register Liaison.

[FR Doc. 2014–01546 Filed 1–27–14; 8:45 am]

BILLING CODE 4910–9X–P

DEPARTMENT OF TRANSPORTATION

Office of the Secretary

Notice of Applications for Certificates of Public Convenience and Necessity and Foreign Air Carrier Permits Filed Under Subpart B (Formerly Subpart Q) During the Week Ending December 7, 2013

The following Applications for Certificates of Public Convenience and Necessity and Foreign Air Carrier Permits were filed under Subpart B (formerly Subpart Q) of the Department of Transportation's Procedural Regulations (See 14 CFR 301.201 *et. seq.*). The due date for Answers, Conforming Applications, or Motions to Modify Scope are set forth below for each application. Following the Answer period DOT may process the application by expedited procedures. Such procedures may consist of the adoption of a show-cause order, a tentative order, or in appropriate cases a final order without further proceedings.

Docket Number: DOT–OST–2013–0204.

Date Filed: December 2, 2013.

Due Date for Answers, Conforming Applications, or Motion to Modify Scope: December 23, 2013.

Description: Application of Norwegian Air International Limited (''Norwegian International'') requesting exemption authority and a foreign air carrier permit to enable it to conduct foreign scheduled and charter air transportation of persons, property and mail to the full extent permitted under the open skies U.S.-E.U.-Iceland-Norway Air Transport Agreement; Norwegian International requests authority to engage in: (a) Foreign scheduled and charter air transportation of persons, property and mail from any point or points behind any Member State(s) of the European Union, via any point or points in any Member State and via intermediate points, to any point(s) in the United States and beyond; (b) foreign scheduled and charter air transportation of persons, property, and mail between any point or points in the United States and any point or points in any member of the European Common Aviation Area; (c) foreign scheduled and charter air transportation of persons

property and mail between any point or points in Norway, via intermediate points, and any point or points in the United States; (d) foreign scheduled and charter cargo air transportation between any point or points in the United States and any other point or points; (e) other charters pursuant to the prior approval requirements; and (f) scheduled and charter transportation consistent with any future, additional rights that may be granted to European Union carriers under the U.S.-E.U. Open Skies Agreement.

Barbara J. Hairston,

Supervisory Dockets Officer, Docket Operations, Federal Register Liaison.

[FR Doc. 2014–01572 Filed 1–27–14; 8:45 am]

BILLING CODE 4910–9X–P

DEPARTMENT OF TRANSPORTATION

Office of the Secretary

Notice of Applications for Certificates of Public Convenience and Necessity and Foreign Air Carrier Permits Filed Under Subpart B (Formerly Subpart Q) During the Week Ending January 11, 2014

The following Applications for Certificates of Public Convenience and Necessity and Foreign Air Carrier Permits were filed under Subpart B (formerly Subpart Q) of the Department of Transportation's Procedural Regulations (See 14 CFR 301.201 *et seq.*). The due date for Answers, Conforming Applications, or Motions to Modify Scope are set forth below for each application. Following the Answer period DOT may process the application by expedited procedures. Such procedures may consist of the adoption of a show-cause order, a tentative order, or in appropriate cases a final order without further proceedings.

Docket Number: DOT–OST–2014–0004.

Date Filed: January 9, 2014.

Due Date for Answers, Conforming Applications, or Motion To Modify Scope: January 30, 2014.

Description: Application of Pentastar Aviation Charter Inc. (PACI) requesting authority to conduct interstate air transportation without limitation within the United States, using planeload domestic and interstate passenger flights for five (5) or more flight between the same points per week.

Barbara J. Hairston,

Supervisory Dockets Officer, Docket Operations, Federal Register Liaison.

[FR Doc. 2014–01567 Filed 1–27–14; 8:45 am]

BILLING CODE 4910–9X–P

DEPARTMENT OF TRANSPORTATION

Office of the Secretary

[Docket No. DOT–OST—2014–0011]

National Freight Advisory Committee: Notice of Public Webinar Meeting

ACTION: Notice of public meeting.

SUMMARY: This notice announces a public meeting of the National Freight Advisory Committee (NFAC). The NFAC will provide information, advice, and recommendations to the U.S. Secretary of Transportation on matters relating to U.S. freight transportation, including implementation of the Moving Ahead for Progress in the 21st Century Act (MAP–21), Public Law 112–141.

DATES: *Dates and Location:* The meeting will take place online, as a webinar, on Thursday, February 6, 2014, from 1 p.m. to 5 p.m., Eastern Standard Time.

FOR FURTHER INFORMATION CONTACT: Tretha Chromey, Designated Federal Officer at (202) 366–1999 or *freight@dot.gov* or visit the NFAC Web site at *www.dot.gov/nfac.*

Additional Information

Background: The NFAC is established under the authority of the U.S. Department of Transportation, in accordance with the provisions of the Federal Advisory Committee Act (5 U.S.C. App. 2). The Secretary of Transportation has determined that establishment of the Committee is in the public interest. The NFAC provides advice and recommendations to the Secretary on matters related to freight transportation in the United States, including (1) implementation of the freight transportation requirements of MAP–21; (2) establishment of the National Freight Network; (3) development of a National Freight Strategic Plan; (4) development of strategies to help States implement State Freight Advisory Committees and State Freight Plans; (5) development of measures of conditions and performance in freight transportation; (6) development of freight transportation investment, data, and planning tools; and (7) legislative recommendations.

On November 19, 2013, the Federal Highway Administration published in the **Federal Register** the draft initial designation of the highway Primary Freight Network (PFN), which is established by the Secretary of Transportation as required by 23 U.S.C. 167(d), and provides information about designation of Critical Rural Freight Corridors (CRFC), which are designated by the States, and establishment of the National Freight Network (NFN), which combines the two, along with the portions of the Interstate System not designated as part of the highway PFN. The notice also solicits comments on the draft initial designation of the highway PFN and other critical aspects of the NFN. A notice published in the **Federal Register** on February 6, 2013 (78 FR 8686), introduced the process for designation of the highway PFN, NFN, and CRFCs.

During this meeting, NFAC members will discuss and prepare a joint comment on the *Designation of the Primary Freight Network* [FHWA–2013–0050].

Agenda: The agenda will include: (1) Welcome and introductions; (2) overview of the meeting format; (3) remarks from the NFAC Chair and Vice Chair; (4) discussion and consideration by full Committee of draft comments; (5) public comment; and (6) adjournment.

To participate in or view the webinar meeting, members of the NFAC and of the public must pre-register online at *https://connectdot.connectsolutions.com/NFAC020614/event/registration.html.* Members and interested persons may link to the webinar registration portal through *www.dot.gov/nafac* no later than February 5, 2014. Upon registration, information will be sent to you at the email address you provide to enable you to connect to the webinar. Should problems arise with webinar registration, contact Kirse Kelly at *ntchost@dot.gov* or 703–235–1324. [This is not a toll-free telephone number.] Note: Members of the public will be able to listen to and view the webinar as observers, and will only be able to participate during the public comment period. Written comments: Persons who wish to submit written comments for consideration by the Committee must email *freight@dot.gov* or send them to Ms. Tretha Chromey, Designated Federal Officer, National Freight Advisory Committee, 1200 New Jersey Avenue SE., W82–320, Washington, DC 20590 by February 3, 2014, to provide sufficient time for review. All other comments may be received at any time before or after the meeting.

Dated: January 22, 2014.

Tretha Chromey,

Designated Federal Officer.

[FR Doc. 2014–01577 Filed 1–27–14; 8:45 am]

BILLING CODE 4910–9X–P

DEPARTMENT OF TRANSPORTATION

Federal Aviation Administration

Availability of Noise Compatibility Program for Willow Run Airport, Ypsilanti, Michigan

AGENCY: Federal Aviation Administration (FAA), DOT.

ACTION: Notice.

SUMMARY: The FAA announces its determination that the noise exposure maps submitted by the Wayne County Airport Authority, Michigan for Willow Run Airport under the provisions of 49 U.S.C. 47501 *et. seq* (Aviation Safety and Noise Abatement Act, herein after referred to as ''the Act'') and 14 Code of Federal Regulations (CFR) part 150 (hereinafter referred to as ''part 150'') is in compliance with applicable requirements. The FAA also announces that it is reviewing a proposed noise compatibility program that was submitted for Willow Run Airport under Part 150 in conjunction with the noise exposure map, and that this program will be approved or disapproved on or before July 15, 2014.

DATES: *Effective Date:* The effective date of the FAA's determination on the noise exposure maps and of the start of its review of the associated noise compatibility program is January 15, 2014. The public comment period ends March 16, 2014.

FOR FURTHER INFORMATION CONTACT: Ernest P. Gubry, 11677 S. Wayne Road, Suite 107, Romulus, MI 48174, Email: *Ernest.Gubry@faa.gov*. Phone: 734–229–2900. Comments on the proposed noise compatibility program should also be submitted to the above office.

SUPPLEMENTARY INFORMATION: This notice announces the FAA finds that the noise exposure maps submitted for Willow Run Airport are in compliance with applicable requirements of Part 150, effective January 15, 2014. Further, FAA is reviewing a proposed noise compatibility program for that airport which will be approved or disapproved on or before July 14, 2014. This notice also announces the availability of this program for public review and comment.

Under 49 U.S.C. 47503 of the Act, an airport operator may submit to the FAA noise exposure maps which meet applicable regulations and which depict non-compatible land uses as of the date of submission of such maps, a description of projected aircraft operations, and the ways in which such operations will affect such maps. The Act requires such maps to be developed in consultation with interested and affected parties in the local community, government agencies, and persons using the airport.

An airport operator who has submitted noise exposure maps that are found by FAA to be in compliance with the requirements of part 150, promulgated pursuant to the Act, may submit a noise compatibility program for FAA approval which sets forth the measures the operator has taken or proposes to take to reduce existing non-compatible uses and prevent the introduction of additional non-compatible uses.

The Wayne County Airport Authority submitted to the FAA on December 12, 2013, noise exposure maps, and other documentation that were produced during the Willow Run Airport 14 CFR part 150 Noise Compatibility Study. It was requested that the FAA review this material as the noise exposure maps, as described in section 47503 of the Act, and that the noise mitigation measures, to be implemented jointly by the airport and surrounding communities, be approved as a noise compatibility program under section 47504 of the Act.

The FAA has completed its review of the noise exposure maps and related descriptions submitted by the Wayne County Airport Authority. The specific documentation determined to constitute the noise exposure maps includes: Figure S1 (Existing 2012 Noise Exposure Map); Figure S2 (Future 2018 Noise Exposure Map), Information pertinent to the aircraft operations, fleet mix, runway utilization, and nighttime use are located in Chapter D, updated in Chapter I and Chapter S. This is inclusive of all tables. Information about noise monitoring sites is located in Figure C11 (Noise Measurement Sites). The FAA has determined that these maps for Willow Run Airport are in compliance with applicable requirements. This determination is effective on January 15, 2014. FAA's determination on an airport operator's noise exposure maps is limited to a finding that the maps were developed in accordance with the procedures contained in appendix A of 14 CFR part 150. Such determination does not constitute approval of the applicant's data, information or plans, or constitute a commitment to approve a noise compatibility program or to fund the implementation of that program.

If questions arise concerning the precise relationship of specific properties to noise exposure contours depicted on a noise exposure map submitted under section 47503 of the Act, it should be noted that the FAA is not involved in any way in determining the relative locations of specific properties with regard to the depicted noise contours, or in interpreting the noise exposure maps to resolve questions concerning, for example, which properties should be covered by the provisions of section 47506 of the Act. These functions are inseparable from the ultimate land use control and planning responsibilities of local government. These local responsibilities are not changed in any way under part 150 or through FAA's review of noise exposure maps. Therefore, the responsibility for the detailed overlaying of noise exposure contours onto the map depicting properties on the surface rests exclusively with the airport operator that submitted those maps, or with those public agencies and planning agencies with which consultation is required under section 47503 of the Act. The FAA has relied on the certification by the airport operator, under section 150.21 of part 150, that the statutorily required consultation has been accomplished.

The FAA has formally received the noise compatibility program for Willow Run Airport, also effective on January 15, 2014. Preliminary review of the submitted material indicates that it conforms to the requirements for the submittal of noise compatibility programs, but that further review will be necessary prior to approval or disapproval of the program. The formal review period, limited by law to a maximum of 180 days, will be completed on or before July 14, 2014. A public hearing was held on November 6, 2013 at 5:30 p.m.

The FAA's detailed evaluation will be conducted under the provisions of section 150.33 of part 150. The primary considerations in the evaluation process are whether the proposed measures may reduce the level of aviation safety, create an undue burden on interstate or foreign commerce, or be reasonably consistent with obtaining the goal of reducing existing non-compatible land uses and preventing the introduction of additional non-compatible land uses.

Interested persons are invited to comment on the proposed program with specific reference to these factors. All comments should be sent to Ernest P. Gubry at the address under **FOR FURTHER INFORMATION CONTACT**. All relevant comments, other than those properly addressed to local land use authorities; will be considered by the FAA to the extent practicable. Copies of the noise exposure maps, the FAA's evaluation of the maps, and the proposed noise compatibility program are available for examination upon prior appointment during normal business hours, at the following location:

Federal Aviation Administration,
Detroit Airports District Office,
11677 S. Wayne Road, Ste. 107,
Romulus, MI 48174;

Willow Run Airport,
Mr. Sean Brosnan,
801 Willow Run Airport,
Ypsilanti, MI 48198.

Questions may be directed to the individual named above under the heading, **FOR FURTHER INFORMATION CONTACT**.

Issued in Romulus, Michigan: January 15, 2014.

John L. Mayfield, Jr.,

Manager, Detroit Airports District Office.

[FR Doc. 2014–01560 Filed 1–27–14; 8:45 am]

BILLING CODE 4910–13–P

DEPARTMENT OF TRANSPORTATION

Federal Aviation Administration

Notice of Request To Release Airport Property

AGENCY: Federal Aviation Administration (FAA), DOT.

ACTION: Notice of intent to rule on request to release airport property at the Colonel James Jabara Airport (AAO), Wichita, Kansas.

SUMMARY: The FAA proposes to rule and invites public comment on the release of land at the Colonel James Jabara Airport (AAO), Wichita, Kansas, under the provisions of 49 U.S.C. 47107(h)(2).

DATES: Comments must be received on or before February 27, 2014.

ADDRESSES: Comments on this application may be mailed or delivered to the FAA at the following address: Lynn D. Martin, Airports Compliance Specialist, Federal Aviation Administration, Airports Division, ACE–610C, 901 Locust Room 364, Kansas City, MO 64106.

In addition, one copy of any comments submitted to the FAA must be mailed or delivered to: John Oswald, Airport Engineer, Colonel James Jabara Airport, Wichita Airport Authority; 2173 Air Cargo Rd., Wichita, KS 67209, (316) 946–4700.

FOR FURTHER INFORMATION CONTACT: Lynn D. Martin, Airports Compliance Specialist, Federal Aviation Administration, Airports Division, ACE–610C, 901 Locust Room 364, Kansas City, MO 64106, (816) 329–2644, *lynn.martin@faa.gov.*

The request to release property may be reviewed, by appointment, in person at this same location.

SUPPLEMENTARY INFORMATION: The FAA invites public comment on the request to release approximately 5.22± acres of airport property at the Colonel James Jabara Airport (AAO) under the provisions of 49 U.S.C. 47107(h)(2). On September 15, 2013, the City of Wichita's Airport Engineer requested from the FAA that approximately 5.22± acres of property be released for sale to Sedgwick County Public Works for the purpose of road widening and utilities. On December 22, 2013, the FAA determined that the request to release property at Colonel James Jabara Airport (AAO) submitted by the Sponsor meets the procedural requirements of the Federal Aviation Administration and the release of the property does not and will not impact future aviation needs at the airport. The FAA may approve the request, in whole or in part, no sooner than thirty days after the publication of this Notice.

The following is a brief overview of the request:

Colonel James Jabara Airport (AAO) is proposing the release of a parcel, totaling 5.22± acres. The release of land is necessary to comply with Federal Aviation Administration Grant Assurances that do not allow federally acquired airport property to be used for non-aviation purposes. The sale of the subject property will result in the land at the Colonel James Jabara Airport (AAO) being changed from aeronautical to nonaeronautical use and release the surface lands from the conditions of the AIP Grant Agreement Grant Assurances, but retaining the mineral rights. In accordance with 49 U.S.C. 47107(c)(2)(B)(i) and (iii), the airport will receive fair market value for the property.

Any person may inspect, by appointment, the request in person at the FAA office listed above under **FOR FURTHER INFORMATION CONTACT**. In addition, any person may, upon appointment and request, inspect the application, notice and other documents determined by the FAA to be related to the application in person at the Colonel James Jabara Airport.

Re-Issued in Kansas City, MO, on January 16, 2014.

Jim A. Johnson,

Manager, Airports Division.

[FR Doc. 2014–01602 Filed 1–27–14; 8:45 am]

BILLING CODE 4910–13–P

DEPARTMENT OF TRANSPORTATION

Federal Aviation Administration

Notice of Intent To Rule on Request To Release Deed Restrictions at the Yellowstone Airport, West Yellowstone, Montana

AGENCY: Federal Aviation Administration (FAA), DOT.

ACTION: Notice of request to release deed restrictions.

SUMMARY: The FAA proposes to rule and invites public comment on the release of deed restrictions at Yellowstone Airport under the provisions of Title 49, U.S.C. Section 47125.

DATES: Comments must be received on or before Februrary 28, 2014.

ADDRESSES: Comments on this application may be mailed or delivered to the FAA at the following address: Mr. David S. Stelling, Manager, Federal Aviation Administration, Northwest Mountain Region, Airports Division, Helena Airports District Office, 2725 Skyway Drive, Suite 2, Helena, Montana 59602.

In addition, one copy of any comments submitted to the FAA must be mailed or delivered to Ms. Debbie Alke, Administrator, Montana Department of Transportation Aeronautics Division, at the following address: Ms. Debbie Alke, Administrator, Aeronautics Division, Montana Department of Transportation, P.O. Box 200507, Helena, MT 59620–0507.

FOR FURTHER INFORMATION CONTACT: Mr. Steve Engebrecht, Civil Engineer/Compliance Specialist, Federal Aviation Administration, Northwest Mountain Region, Helena Airports District Office, 2725 Skyway Drive, Suite 2, Helena, Montana 59602.

The request to release deed restrictions may be reviewed, by appointment, in person at this same location.

SUPPLEMENTARY INFORMATION: The FAA invites public comment on the request to release deed restrictions at the Yellowstone Airport under the provisions of the Title 49, U.S.C. 47125.

The FAA Modernization and Reform Act of 2012, HR 658, Section 817, gave the Secretary of Transportation the authorization to grant an airport, city, or county release from any of the terms, conditions, reservations, or restrictions contained in a deed under which the United States conveyed to the airport, city, or county an interest in real property for airport purposes pursuant to Section 16 of the Federal Airport Act

(60 Stat. 179) or Section 23 of the Airport and Airway Development Act of 1970 (84 Stat. 232).

On January 9, 2014, the FAA determined that the request to release deed restrictions at the Yellowstone Airport submitted by the Montana Department of Transportation meets the procedural requirements of the Federal Aviation Administration. The FAA may approve the request, in whole or in part, no later than February 28, 2014.

The following is a brief overview of the request:

The Montana Department of Transportation is proposing the release of deed restrictions at the Yellowstone Airport from a Correction Deed issued on August 12, 1968. On October 7, 1963, a deed containing restrictions transferred the airport property from the United States to the State of Montana. The airport was built in 1963 as a cooperative effort between the United States Departments of the Interior and Agriculture, the Federal Aviation Administration (FAA), and the State of Montana. A subsequent Correction Deed (correcting the legal description) issued on August 12, 1968 contains those same restrictions, under which the airport has operated for 50 years. In an effort to make the airport more economically viable, the State of Montana and the Montana Department of Transportation (MDT) request the following deed restrictions be removed:

- Deed Restriction 1. ''The State of Montana will use the lands herein conveyed for airport development.'': Requesting release of 214.45 acres from this deed restriction in order to maintain financial viability by permitting possible development of these areas for non-airport development related purposes to generate new sources of income to operate and maintain the airport.
- Deed Restriction 6. ''That all facilities of the airport developed with Federal aid and all those useable for landing and take-off of aircraft will be available at all times without charge for use by the Department of Agriculture and Interior in the conduct of its official business in common with other aircraft.'': Requesting release of all airport property from this deed restriction in order to maintain financial viability by being permitted to charge for substantial use by the Department of Agriculture and Department of Interior aircraft, in compliance with Grant Assurance 27.
- Deed Restriction 7. ''That no commercial overnight facilities, such a motels, hotels, or private residences will be constructed on the property herein conveyed.'': Requesting release of 214.45 acres from this deed restriction in order to maintain financial viability by permitting possible development of commercial overnight facilities and generate new sources of income to operate and maintain the airport. MDT understands that residential development is non-compliant with its federal grant assurances and has no intention of allowing private residences to be constructed on airport property.
- Deed Restriction 8. ''That commercial advertising signs will be prohibited within the airport access road area.'': Requesting release of 104.93 acres from this deed restriction in order to maintain financial viability by permitting possible development of commercial advertising signs within the airport access road area and generate new sources of income to operate and maintain the airport.

Any person may inspect, by appointment, the request in person at the FAA office listed above under **FOR FURTHER INFORMATION CONTACT**.

In addition, any person may, upon appointment and request, inspect the request to release deed restrictions and other documents germane to the request in person at the Yellowstone Airport.

Issued in Helena, Montana, on January 17, 2014.

David S. Stelling,

Manager, Helena Airports District Office.

[FR Doc. 2014–01559 Filed 1–27–14; 8:45 am]

BILLING CODE 4910–13–P

DEPARTMENT OF TRANSPORTATION

Federal Motor Carrier Safety Administration

[Docket No. FMCSA–2006–26367]

Motor Carrier Safety Advisory Committee and Subcommittee: Public Meeting

AGENCY: Federal Motor Carrier Safety Administration (FMCSA), DOT.

ACTION: Notice of Meeting.

SUMMARY: FMCSA announces that its Motor Carrier Safety Advisory Committee (MCSAC) will meet on February 10–11, 2014, to provide ideas that Agency should consider for reauthorization of the surface transportation legislation. On February 12, 2014, MCSAC's Compliance, Safety and Accountability (CSA) subcommittee will convene. Meetings are open to the public for their entirety and there will be a period of time at the end of each day for the public to submit oral comments.

Times and Dates: The meeting will be held Monday–Tuesday, February 10–11, 2014, from 9 a.m. to 4:30 p.m., Eastern Daylight Time (EDT), at the Hilton Alexandria Old Town, 1767 King Street, Alexandria, VA 22314 in the Washington and Jefferson Rooms on the 2nd floor. On Wednesday, February 12, 2014, the CSA subcommittee will meet at that same location from 9 a.m. to 3 p.m. Copies of the MCSAC Task Statement and an agenda for the entire meeting will be made available in advance of the meeting at *http://mcsac.fmcsa.dot.gov.*

FOR FURTHER INFORMATION CONTACT: Ms. Shannon L. Watson, Senior Advisor to the Associate Administrator for Policy, Federal Motor Carrier Safety Administration, U.S. Department of Transportation, 1200 New Jersey Avenue SE., Washington, DC 20590, (202) 385–2395, *mcsac@dot.gov.*

Services for Individuals With Disabilities

For information on facilities or services for individuals with disabilities or to request special assistance at the meeting, please contact Ms. Dana Larkin at (617) 494–2821 or *dana.larkin@dot.gov* by Wednesday, February 5, 2014.

SUPPLEMENTARY INFORMATION:

I. Background

MCSAC was established to provide FMCSA with advice and recommendations on motor carrier safety programs and motor carrier safety regulations. MCSAC is composed of 20 voting representatives from safety advocacy, safety enforcement, labor, and industry stakeholders of motor carrier safety. The diversity of the Committee ensures the requisite range of views and expertise necessary to discharge its responsibilities. The Committee operates as a discretionary committee under the authority of the U.S. Department of Transportation (DOT), established in accordance with the provisions of the Federal Advisory Committee Act (FACA), as amended, 5 U.S.C. App. 2. See FMCSA's MCSAC Web site for additional information about the committee's activities at *http://mcsac.fmcsa.dot.gov/.*

II. Meeting Participation

Oral comments from the public will be heard during the last half-hour of the meetings each day. Should all public comments be exhausted prior to the end of the specified period, the comment period will close. Members of the public may submit written comments on the topics to be considered during the meeting by Wednesday, February 5, 2014, to Federal Docket Management

System (FDMC) Docket Number FMCSA–2006–26367 using any of the following methods:

• *Federal eRulemaking Portal:* Go to *http://www.regulations.gov.* Follow the online instructions for submitting comments.

• *Fax:* 202–493–2251.

• *Mail:* Docket Management Facility; U.S. Department of Transportation, 1200 New Jersey Avenue SE., West Building, Room W12–140, Washington, DC 20590.

• *Hand Delivery:* U.S. Department of Transportation, 1200 New Jersey Avenue SE., Room W12–140, Washington, DC, between 9 a.m. and 5 p.m., E.T. Monday through Friday, except Federal holidays.

Issued on: January 22, 2014.

Larry W. Minor,

Associate Administrator for Policy.

[FR Doc. 2014–01518 Filed 1–27–14; 8:45 am]

BILLING CODE 4910–EX–P

DEPARTMENT OF TRANSPORTATION

Federal Motor Carrier Safety Administration

[Docket No. FMCSA–2001–9258; FMCSA–2001–9561; FMCSA–2003–15268; FMCSA–2005–21254; FMCSA–2009–0121; FMCSA–2011–0140; FMCSA–2011–0141]

Qualification of Drivers; Exemption Applications; Vision

AGENCY: Federal Motor Carrier Safety Administration (FMCSA), DOT.

ACTION: Notice of renewal of exemptions; request for comments.

SUMMARY: FMCSA announces its decision to renew the exemptions from the vision requirement in the Federal Motor Carrier Safety Regulations for 41 individuals. FMCSA has statutory authority to exempt individuals from the vision requirement if the exemptions granted will not compromise safety. The Agency has concluded that granting these exemption renewals will provide a level of safety that is equivalent to or greater than the level of safety maintained without the exemptions for these commercial motor vehicle (CMV) drivers.

DATES: This decision is effective January 29, 2014. Comments must be received on or before February 27, 2014.

ADDRESSES: You may submit comments bearing the Federal Docket Management System (FDMS) numbers: Docket No. [Docket No. FMCSA–2001–9258; FMCSA–2001–9561; FMCSA–2003–15268; FMCSA–2005–21254; FMCSA–2009–0121; FMCSA–2011–0140; FMCSA–2011–0141], using any of the following methods:

• *Federal eRulemaking Portal:* Go to *http://www.regulations.gov.* Follow the on-line instructions for submitting comments.

• *Mail:* Docket Management Facility; U.S. Department of Transportation, 1200 New Jersey Avenue SE., West Building Ground Floor, Room W12–140, Washington, DC 20590–0001.

• *Hand Delivery or Courier:* West Building Ground Floor, Room W12–140, 1200 New Jersey Avenue SE., Washington, DC, between 9 a.m. and 5 p.m., Monday through Friday, except Federal Holidays.

• *Fax:* 1–202–493–2251.

Instructions: Each submission must include the Agency name and the docket number for this notice. Note that DOT posts all comments received without change to *http://www.regulations.gov,* including any personal information included in a comment. Please see the Privacy Act heading below.

Docket: For access to the docket to read background documents or comments, go to *http://www.regulations.gov* at any time or Room W12–140 on the ground level of the West Building, 1200 New Jersey Avenue SE., Washington, DC, between 9 a.m. and 5 p.m., Monday through Friday, except Federal holidays. The Federal Docket Management System (FDMS) is available 24 hours each day, 365 days each year. If you want acknowledgment that we received your comments, please include a self-addressed, stamped envelope or postcard or print the acknowledgement page that appears after submitting comments on-line.

Privacy Act: Anyone may search the electronic form of all comments received into any of our dockets by the name of the individual submitting the comment (or of the person signing the comment, if submitted on behalf of an association, business, labor union, etc.). You may review DOT's Privacy Act Statement for the Federal Docket Management System (FDMS) published in the **Federal Register** on January 17, 2008 (73 FR 3316).

FOR FURTHER INFORMATION CONTACT: Elaine M. Papp, Chief, Medical Programs Division, 202–366–4001, *fmcsamedical@dot.gov,* FMCSA, Department of Transportation, 1200 New Jersey Avenue, SE., Room W64–224, Washington, DC 20590–0001. Office hours are from 8:30 a.m. to 5 p.m. Monday through Friday, except Federal holidays.

SUPPLEMENTARY INFORMATION:

Background

Under 49 U.S.C. 31136(e) and 31315, FMCSA may renew an exemption from the vision requirements in 49 CFR 391.41(b)(10), which applies to drivers of CMVs in interstate commerce, for a two-year period if it finds ''such exemption would likely achieve a level of safety that is equivalent to or greater than the level that would be achieved absent such exemption.'' The procedures for requesting an exemption (including renewals) are set out in 49 CFR part 381.

Exemption Decision

This notice addresses 41 individuals who have requested renewal of their exemptions in accordance with FMCSA procedures. FMCSA has evaluated these 41 applications for renewal on their merits and decided to extend each exemption for a renewable two-year period. They are:

Danny F. Burnley (KY)
Domenic J. Carassai (NJ)
Ronald J. Claud (NY)
Stewart K. Clayton (TX)
Sean R. Conorman (MI)
Kenneth D. Daniels (PA)
Fred W. Duran (MS)
Jackie E. Frederick (AL)
Robert E. Graves (NE)
Bruce E. Hemmer (WI)
Steven P. Holden (MD)
James Howard (CA)
Christopher G. Jarvela (MI)
Donald L. Jensen (SD)
Donald M. Jenson (SD)
Dennis D. Lesperance (OR)
Brad L. Mathna (PA)
Dean A. Maystead (MI)
Ramon Melendez (NJ)
Brian P. Millard (SC)
Vincent P. Miller (SC)
Carl V. Murphy, Jr. (TX)
Steven D. Nash (MN)
Matthew D. Nelson (FL)
Jesse A. Nosbush (MN)
Warren J. Nyland (MI)
Mark A. Pirl (NC)
Dennis M. Prevas (WI)
Merle M. Price (IA)
Thomas D. Reynolds (NC)
Greg L. Riles (IA)
Terrence F. Ryan (FL)
Kirby R. Sands (IA)
Dennis W. Stubrich (PA)
Thomas L. Swatley (TN)
Calvin D. Tomlinson (KY)
Wesley E. Turner (TX)
Mona J. Van Krieken (OR)
Stephen W. Verrette (MI)
Leslie H. Wylie (ID)
Paul S. Yocum (IN)

The exemptions are extended subject to the following conditions: (1) That each individual has a physical

examination every year (a) by an ophthalmologist or optometrist who attests that the vision in the better eye continues to meet the requirements in 49 CFR 391.41(b)(10), and (b) by a medical examiner who attests that the individual is otherwise physically qualified under 49 CFR 391.41; (2) that each individual provides a copy of the ophthalmologist's or optometrist's report to the medical examiner at the time of the annual medical examination; and (3) that each individual provide a copy of the annual medical certification to the employer for retention in the driver's qualification file and retains a copy of the certification on his/her person while driving for presentation to a duly authorized Federal, State, or local enforcement official. Each exemption will be valid for two years unless rescinded earlier by FMCSA. The exemption will be rescinded if: (1) The person fails to comply with the terms and conditions of the exemption; (2) the exemption has resulted in a lower level of safety than was maintained before it was granted; or (3) continuation of the exemption would not be consistent with the goals and objectives of 49 U.S.C. 31136(e) and 31315.

Basis for Renewing Exemptions

Under 49 U.S.C. 31315(b)(1), an exemption may be granted for no longer than two years from its approval date and may be renewed upon application for additional two year periods. In accordance with 49 U.S.C. 31136(e) and 31315, each of the 41 applicants has satisfied the entry conditions for obtaining an exemption from the vision requirements (66 FR 17743; 66 FR 30502; 66 FR 33990; 66 FR 41654; 68 FR 35772; 68 FR 37197; 68 FR 44837; 68 FR 48989; 70 FR 30999; 70 FR 33937; 70 FR 41811; 70 FR 42615; 70 FR 46567; 72 FR 32705; 72 FR 40359; 72 FR 40360; 74 FR 26461; 74 FR 34074; 74 FR 34630; 74 FR 34632; 76 FR 37169; 76 FR 40445; 76 FR 44653; 76 FR 49531; 76 FR 50318; 76 FR 53710). Each of these 41 applicants has requested renewal of the exemption and has submitted evidence showing that the vision in the better eye continues to meet the requirement specified at 49 CFR 391.41(b)(10) and that the vision impairment is stable. In addition, a review of each record of safety while driving with the respective vision deficiencies over the past two years indicates each applicant continues to meet the vision exemption requirements.

These factors provide an adequate basis for predicting each driver's ability to continue to drive safely in interstate commerce. Therefore, FMCSA concludes that extending the exemption for each renewal applicant for a period of two years is likely to achieve a level of safety equal to that existing without the exemption.

Request for Comments

FMCSA will review comments received at any time concerning a particular driver's safety record and determine if the continuation of the exemption is consistent with the requirements at 49 U.S.C. 31136(e) and 31315. However, FMCSA requests that interested parties with specific data concerning the safety records of these drivers submit comments by February 27, 2014.

FMCSA believes that the requirements for a renewal of an exemption under 49 U.S.C. 31136(e) and 31315 can be satisfied by initially granting the renewal and then requesting and evaluating, if needed, subsequent comments submitted by interested parties. As indicated above, the Agency previously published notices of final disposition announcing its decision to exempt these 41 individuals from the vision requirement in 49 CFR 391.41(b)(10). The final decision to grant an exemption to each of these individuals was made on the merits of each case and made only after careful consideration of the comments received to its notices of applications. The notices of applications stated in detail the qualifications, experience, and medical condition of each applicant for an exemption from the vision requirements. That information is available by consulting the above cited **Federal Register** publications.

Interested parties or organizations possessing information that would otherwise show that any, or all, of these drivers are not currently achieving the statutory level of safety should immediately notify FMCSA. The Agency will evaluate any adverse evidence submitted and, if safety is being compromised or if continuation of the exemption would not be consistent with the goals and objectives of 49 U.S.C. 31136(e) and 31315, FMCSA will take immediate steps to revoke the exemption of a driver.

Submitting Comments

You may submit your comments and material online or by fax, mail, or hand delivery, but please use only one of these means. FMCSA recommends that you include your name and a mailing address, an email address, or a phone number in the body of your document so that FMCSA can contact you if there are questions regarding your submission.

To submit your comment online, go to *http://www.regulations.gov* and in the search box insert the docket numbers FMCSA–2001–9258; FMCSA–2001–9561; FMCSA–2003–15268; FMCSA–2005–21254; FMCSA–2009–0121; FMCSA–2011–0140; FMCSA–2011–0141 and click the search button. When the new screen appears, click on the blue ''Comment Now!'' button on the right hand side of the page. On the new page, enter information required including the specific section of this document to which each comment applies, and provide a reason for each suggestion or recommendation. If you submit your comments by mail or hand delivery, submit them in an unbound format, no larger than 8½ by 11 inches, suitable for copying and electronic filing. If you submit comments by mail and would like to know that they reached the facility, please enclose a stamped, self-addressed postcard or envelope.

We will consider all comments and material received during the comment period and may change this proposed rule based on your comments. FMCSA may issue a final rule at any time after the close of the comment period.

Viewing Comments and Documents

To view comments, as well as any documents mentioned in this preamble, To submit your comment online, go to *http://www.regulations.gov* and in the search box insert the docket number FMCSA–2001–9258; FMCSA–2001–9561; FMCSA–2003–15268; FMCSA–2005–21254; FMCSA–2009–0121; FMCSA–2011–0140; FMCSA–2011–0141 and click ''Search.'' Next, click ''Open Docket Folder'' and you will find all documents and comments related to the proposed rulemaking.

Issued on: January 2, 2014.

Larry W. Minor,

Associate Administrator for Policy.

[FR Doc. 2014–01320 Filed 1–27–14; 8:45 am]

BILLING CODE 4910–EX–P

DEPARTMENT OF TRANSPORTATION

Pipeline and Hazardous Materials Safety Administration

[Docket No. PHMSA–2013–0226]

Improvements in Preparing Oil Spill Facility Response Plans

AGENCY: Pipeline and Hazardous Materials Safety Administration (PHMSA), DOT.

ACTION: Notice; Issuance of Advisory Bulletin.

SUBJECT: Conforming Facility Response Plans (FRPs) to Appendix A to Part 194—''Guidelines for the Preparation of Response Plans'' and Identifying Deficiencies.

SUMMARY: PHMSA is issuing this advisory bulletin to remind all onshore oil pipeline operators of the circumstances of the Marshall, Michigan, pipeline accident and the need to update FRPs every five years from the date of last submission or the last approval according to its significant and substantial designation. Plans must also be updated whenever new or different operating conditions would affect the implementation of a response plan. (See 49 CFR 194.121.) When updating their FRPs, operators should utilize Appendix A Part 194—Guidelines for the Preparation of Response Plans and submit them electronically to PHMSA.

This bulletin also notifies that FRPs found to meet the requirements of PHMSA's regulations at Part 194 will be posted on PHMSA's Web site for public viewing. Prior to posting, PHMSA will redact certain information, such as personally identifiable information and certain security related information, in accordance with the Freedom of Information Act and any other applicable Federal law. This document also alerts operators and their plan submitters to common errors in plans that require amendment prior to PHMSA's issuance of approval. Finally, onshore oil pipeline operators are encouraged to consider replacing incorporations by reference in their FRPs with a summary of referenced material or a copy of the full document.

FOR FURTHER INFORMATION CONTACT: Justin Pryor by phone at 202–366–4595 or by email at *justin.pryor@dot.gov.* Information about PHMSA may be found at *http://www.phmsa.dot.gov.*

SUPPLEMENTARY INFORMATION:

I. Background

On Sunday, July 25, 2010, at 5:58 p.m. eastern daylight time, a segment of a 30-inch-diameter pipeline (Line 6B), owned and operated by Enbridge Incorporated (Enbridge), ruptured in a wetland in Marshall, Michigan. The rupture was not discovered or addressed for over 17 hours. During the time lapse, Enbridge twice pumped additional oil (81 percent of the total release) into Line 6B during two startups; the total release was estimated to be 843,444 gallons of crude oil. The oil saturated the surrounding wetlands and flowed into the Talmadge Creek and the Kalamazoo River. Local residents self-evacuated from their homes, and serious environmental damage has required long-term remediation. About 320 people reported symptoms consistent with crude oil exposure. No fatalities were reported. Cleanup and remediation continues, and costs have exceeded $1 billion.

The National Transportation Safety Board (NTSB) determined that the probable cause of the pipeline rupture was stress corrosion cracking that grew and coalesced from crack and corrosion defects under disbonded polyethylene tape coating. The rupture and prolonged release were caused by pervasive organizational failures at Enbridge that included: (1) Deficient integrity management procedures, which allowed well-documented crack defects in corroded areas to propagate until the pipeline failed; (2) inadequate training of control center personnel, which resulted in Enbridge's failure to recognize the rupture for 17 hours and through two re-starts of the pipeline; and (3) insufficient public awareness and education, which allowed the release to continue for nearly 14 hours after the first notification of an odor to local emergency response agencies.

Furthermore, the NTSB found that a failure to identify and ensure the availability of well-trained emergency responders with sufficient response resources, a lack of regulatory guidance for pipeline facility response planning, and limited oversight of pipeline emergency preparedness led to a deficient FRP that contributed to the severity of the environmental damage and long term consequences.

II. Advisory Bulletin (ADB–2014–01)

To: Owners and Operators of Onshore Oil Pipeline Systems.

Subject: Conforming Facility Response Plans to Appendix A to Part 194—''Guidelines for the Preparation of Response Plans'' and Identifying Deficiencies.

Advisory: PHMSA's regulations for FRPs, under § 194.115(a), state that ''each operator shall identify and ensure, by contract or other approved means, the resources necessary to remove, to the maximum extent practicable, a worst case discharge and to mitigate or prevent a substantial threat of a worst case discharge.'' Section 194.115(b) goes on to state that ''an operator shall identify in the response plan the response resources which are available to respond within the time specified, after discovery of a worst case discharge, or to mitigate the substantial threat of such a discharge.''

The NTSB noted that, because the pipeline safety regulations do not explicitly mandate the amount of resources or recovery capacity required for a worst-case discharge, Enbridge misinterpreted and miscalculated the amount of oil response resources required by § 194.115, resulting in a lack of adequate oil spill recovery equipment and resources during the initial response. The NTSB also explained that although Part 194 Appendix A recommends using the United States Coast Guard (USCG) regulations for preparation of FRPs, there was no indication that Enbridge utilized the USCG regulations in the preparation of its FRP.

Section 194.115(a) requires operators to identify in their FRP the resources that are available to respond to a release. PHMSA points operators to Appendix C to 33 CFR part 154 Section 7, ''Calculating the Worst Case Discharge Planning Volumes'' as the best reference for planning for and ensuring proper response capability. Appendix A of Part 194—''Guidelines for the Preparation of Response Plans'' recommends that operators use the USCG regulations for preparation of response plans. To help comply with the identification and assurance of adequate response resources, as noted in the preamble to the Final Rule ''Pipeline Safety: Response Plans for Onshore Transportation-Related Oil Pipelines,'' PHMSA ''encourages operators to use USCG-classified oil spill response organizations (OSRO).'' An operator contracting with USCG-classified OSROs for response to a worst case discharge will not have to describe the response resources or the response equipment maintenance program of the USCG-classified OSROs. The operator must consider the time required for the USCG-classified OSRO to respond to the spill from wherever the contractor is based to the high volume area and all other areas.

For operators that contract with non-USCG-classified OSRO's, PHMSA uses the USCG guidelines at 33 CFR part 154, Appendix C, along with the USCG planning volume worksheet when it reviews FRPs to confirm sufficiency of response resources and compliance with Part 194.[1]

Section 194.115(b) lists the maximum times allowed for response resources and personnel to arrive at the scene of a rupture. The increments of time are dependent on whether the spill occurs in a high volume area. The NTSB noted that Enbridge's plan erroneously indicated that tiers refer to the size of a spill. Operators are reminded that ''high

[1] The USCG Planning Volume Worksheet is available at *http://www.phmsa.dot.gov/pipeline/library.*

volume area'' is defined in § 194.5. The response times that appear in the table at § 194.115(b) correspond with the tiers established by the USCG for a worst-case discharge in the USCG guidance referenced in Appendix A to Part 194.

As stated in a prior advisory bulletin ADB–2010–05 published in the **Federal Register** on June 28, 2010 (75 FR 36773) operators should review and update their oil spill response plans and contracts to ensure the availability of necessary response resources to a worst case discharge from their pipeline facilities even in the event that more than one significant incident were to occur simultaneously. The NTSB found that during the Marshall, MI, incident, Enbridge's OSROs failed to adequately respond because many of the initial response resources identified in the Enbridge's FRP took over 10 hours to arrive and be deployed at the spill site. Using a USCG-classified OSRO to account for response resources can help to reduce equipment information in an FRP and can help PHMSA confirm response capability in terms of resources. Nonetheless, it is the operator's responsibility to ensure that any OSROs listed can respond to the scene of an incident with the appropriate amount of resources and within the times provided in the tiers at § 194.115(b).

Additionally, to assist PHMSA in the timely processing and review of FRPs, onshore pipeline operators are encouraged to submit electronic copies of their response plans. PHMSA prefers electronic copies of plans in Portable Document Format over hard copies of plans. Electronic copies can be sent via commercial courier on disc or flash drive to the Office of Pipeline Safety at PHMSA Headquarters' address below:

Office of Pipeline Safety (Attn: Response Plan Review), Pipeline and Hazardous Materials Safety Administration, U.S. Department of Transportation, PHP–5, East Building, 2nd Floor, E22–321, 1200 New Jersey Avenue SE., Washington, DC 20590.

Alternatively, electronic files less than 5 MB can be sent to *PHMSA.OPA90@dot.gov.*

PHMSA also wishes to point out errors that commonly result in the rejection of plans in order to facilitate plan preparation and review. These errors include: (1) Missing, incorrect or incomplete methodology and calculations used to determine a Worst Case Discharge (WCD) that compares the volumes of WCDs from the pipeline, breakout tanks, and maximum historical discharge to include, if necessary, an affirmation that any of these elements are not applicable to the calculation; (2) failure to identify response resources that are available to respond to an incident scene; (3) failure to identify specific environmentally and economically sensitive areas applicable to the pipeline area of operation; (4) missing provisions to ensure responders are safe at a response site; and (5) omission of the name or title and 24-hour telephone number of an operator's ''Qualified Individual'' and at least one alternate. Deficiencies in any of these areas will require correction before PHMSA can approve a plan. FRPs found to meet the requirements of PHMSA's regulations found at Part 194 will be approved and redacted in accordance with FOIA and any other applicable Federal law and posted on PHMSA's Web site for public viewing. PHMSA posts these plans to help Federal, state and local officials strengthen and coordinate planning and prevention activities.

Finally, PHMSA advises operators that while it is permitted to incorporate material into an FRP by reference, this practice may inhibit regulators' and incident responders' access to and understanding of an FRP during response to oil spill incidents and emergencies. For example, when responding to a spill, responders and regulators need access to operations, maintenance, and emergency manuals. It is important that all of the potential users of an FRP have immediate access to all relevant information and procedures.

Therefore, operators should review their FRPs and carefully consider each incorporated document and determine whether full copies or summaries of documents should replace the references. PHMSA suggests operators include the relevant portion of any externally referenced procedural manual that is required in the FRP, by provisions of 49 CFR part 194. This practice will also allow PHMSA to more effectively determine that the operator's FRP procedures are consistent with Part 194 requirements.

Authority: 49 U.S.C. chapter 601: 49 CFR 1.53.

Issued in Washington, DC, on January 22, 2014.

Jeffrey D. Wiese,

Associate Administrator for Pipeline Safety.

[FR Doc. 2014–01515 Filed 1–27–14; 8:45 am]

BILLING CODE 4910–60–P

DEPARTMENT OF THE TREASURY

Submission for OMB Review; Comment Request

January 22, 2014.

The Department of the Treasury will submit the following information collection requests to the Office of Management and Budget (OMB) for review and clearance in accordance with the Paperwork Reduction Act of 1995, Public Law 104–13, on or after the date of publication of this notice.

DATES: Comments should be received on or before February 27, 2014 to be assured of consideration.

ADDRESSES: Send comments regarding the burden estimate, or any other aspect of the information collection, including suggestions for reducing the burden, to (1) Office of Information and Regulatory Affairs, Office of Management and Budget, Attention: Desk Officer for Treasury, New Executive Office Building, Room 10235, Washington, DC 20503, or email at *OIRA_Submission@OMB.EOP.gov* and (2) Treasury PRA Clearance Officer, 1750 Pennsylvania Ave. NW., Suite 8141, Washington, DC 20220, or email at *PRA@treasury.gov.*

FOR FURTHER INFORMATION CONTACT: Copies of the submission(s) may be obtained by calling (202) 622–1295, emailing *PRA@treasury.gov,* or the entire information collection request may be found at *www.reginfo.gov.*

Internal Revenue Service (IRS)

OMB Number: 1545–0137.

Type of Review: Extension without change of a currently approved collection.

Title: Contract Coverage Under Title II of the Social Security Act.

Form: Form 2032.

Abstract: U.S. citizens and resident aliens employed abroad by foreign affiliates of American employers are exempt from social security taxes. Under Internal Revenue Code section 3121(1), American employers may file an agreement on Form 2032 to waive this exemption and obtain social security coverage for U.S. citizens and resident aliens employed abroad by their foreign affiliates. The American employers can later file Form 2032 to cover additional foreign affiliates as an amendment to their original agreement.

Affected Public: Individuals or households; Businesses or other for-profits.

Estimated Annual Burden Hours: 973.

OMB Number: 1545–0409.

Type of Review: Revision of a currently approved collection.

Title: Application for Reward for Original Information.

Form: Form 211.

Abstract: Form 211 is the official application form used by persons requesting rewards for submitting information concerning alleged violations of the tax laws by other persons. Such rewards are authorized by Internal Revenue Code Section 7623. The data is used to determine and pay rewards to those persons who voluntarily submit information.

Affected Public: Individuals or households.

Estimated Annual Burden Hours: 15,000.

OMB Number: 1545–0747.

Type of Review: Revision of a currently approved collection.

Title: IRA Contribution Information.

Form: Form 5498.

Abstract: Form 5498 is used by trustees and issuers to report contributions to, and the fair market value of, an individual retirement arrangement. The information on the form will be used by IRS to verify compliance with reporting rules under regulation section 1.408–5 and to verify that the participant of the IRA has made the contribution for which he or she is taking the deduction.

Affected Public: Private sector: Businesses or other for-profits.

Estimated Annual Burden Hours: 48,731,780.

OMB Number: 1545–0796.

Type of Review: Extension without change of a currently approved collection.

Title: Office of Chief Counsel—Application.

Form: Form 6524.

Abstract: Form 6524 provides data the IRS deems critical for evaluating an Office of Chief Counsel attorney applicant's qualifications, such as LSAT score, bar admission status, type of work preference, law school, and class standing.

Affected Public: Individuals or households.

Estimated Annual Burden Hours: 900.

OMB Number: 1545–0798.

Type of Review: Extension without change of a currently approved collection.

Title: 26 CFR 31.6001–1 Records in general; 26 CFR 31.6001–2 Additional Records under FICA; 26 CFR 31.6001–3, Additional records under Railroad Retirement Tax Act; 26 CFR 31.6001–5 Additional records.

Abstract: IRC section 6001 requires, in part, that every person liable for tax, or for the collection of that tax keep such records and comply with such rules and regulations as the Secretary may from time to time prescribe. 26 CFR 31.6001 has special application to employment taxes. These records are needed to ensure compliance with the Code.

Affected Public: Individuals or households; Businesses or other for-profits; Not-for-profit institutions; Farms; and Federal, state, local, and tribal governments.

Estimated Annual Burden Hours: 30,273,950.

OMB Number: 1545–1051.

Type of Review: Extension without change of a currently approved collection.

Title: INTL–29–91 (Final) Computation and Characterization of Income and Earnings and Profits under the Dollar Approximate Separate Transactions Method of Accounting (DASTM).

Abstract: For taxable years after the final regulations are effective, taxpayers operating in hyperinflationary currencies must use the U.S. dollar as their functional currency and compute income using the dollar approximate separate transactions method (DASTM). Small taxpayers may elect an alternate method by which to compute income or loss. For prior taxable years in which income was computed using the profit and loss method, taxpayers may elect to recompute their income using DASTM.

Affected Public: Private sector: Businesses or other for-profits.

Estimated Annual Burden Hours: 1,000.

OMB Number: 1545–1141.

Type of Review: Extension without change of a currently approved collection.

Title: Notice 89–102, Treatment of Acquisition of Certain Financial Institutions; Tax Consequences of Federal Financial Assistance.

Abstract: Section 597 of the Internal Revenue Code provides that the Secretary provide guidance concerning the tax consequences of Federal financial assistance received by qualifying institutions. These institutions may defer payment of Federal income tax attributable to the assistance. Required information identifies deferred tax liabilities.

Affected Public: Businesses or other for-profits.

Estimated Annual Burden Hours: 125.

OMB Number: 1545–1189.

Type of Review: Extension without change of a currently approved collection.

Title: Dollar Election Under Section 985.

Form: Form 8819.

Abstract: Form 8819 is filed by U.S. and foreign businesses to elect the U.S. dollar as their functional currency or as the functional currency of their controlled entities. The IRS uses Form 8819 to determine if the election is properly made.

Affected Public: Private sector: Businesses or other for-profits.

Estimated Annual Burden Hours: 3,220.

Brenda Simms,

Treasury PRA Clearance Officer.

[FR Doc. 2014–01469 Filed 1–27–14; 8:45 am]

BILLING CODE 4810–01–P

DEPARTMENT OF THE TREASURY

Office of Foreign Assets Control

Additional Designations, Foreign Narcotics Kingpin Designation Act

AGENCY: Office of Foreign Assets Control, Treasury.

ACTION: Notice.

SUMMARY: The U.S. Department of the Treasury 's Office of Foreign Assets Control (''OFAC'') is publishing the name of one individual whose property and interests in property has been blocked pursuant to the Foreign Narcotics Kingpin Designation Act (''Kingpin Act'') (21 U.S.C. 1901–1908, 8 U.S.C. 1182).

DATES: The designation by the Director of OFAC of the one individual identified in this notice pursuant to section 805(b) of the Kingpin Act is effective on January 16, 2014.

FOR FURTHER INFORMATION CONTACT: Assistant Director, Sanctions Compliance & Evaluation, Office of Foreign Assets Control, U.S. Department of the Treasury, Washington, DC 20220, Tel: (202) 622–2490.

SUPPLEMENTARY INFORMATION:

Electronic and Facsimile Availability

This document and additional information concerning OFAC are available on OFAC's Web site at *http://www.treasury.gov/ofac* or via facsimile through a 24-hour fax-on-demand service at (202) 622–0077.

Background

The Kingpin Act became law on December 3, 1999. The Kingpin Act establishes a program targeting the activities of significant foreign narcotics traffickers and their organizations on a worldwide basis. It provides a statutory framework for the imposition of sanctions against significant foreign narcotics traffickers and their organizations on a worldwide basis, with the objective of denying their businesses and agents access to the U.S. financial system and the benefits of trade and transactions involving U.S. companies and individuals.

The Kingpin Act blocks all property and interests in property, subject to U.S. jurisdiction, owned or controlled by significant foreign narcotics traffickers as identified by the President. In addition, the Secretary of the Treasury, in consultation with the Attorney General, the Director of the Central Intelligence Agency, the Director of the Federal Bureau of Investigation, the Administrator of the Drug Enforcement Administration, the Secretary of Defense, the Secretary of State, and the Secretary of Homeland Security may designate and block the property and interests in property, subject to U.S. jurisdiction, of persons who are found to be: (1) Materially assisting in, or providing financial or technological support for or to, or providing goods or services in support of, the international narcotics trafficking activities of a person designated pursuant to the Kingpin Act; (2) owned, controlled, or directed by, or acting for or on behalf of, a person designated pursuant to the Kingpin Act; or (3) playing a significant role in international narcotics trafficking.

On January 16, 2014, the Director of OFAC designated the following one individual whose property and interests in property are blocked pursuant to section 805(b) of the Kingpin Act.

Individual

1. TAPIA QUINTERO, Jose Guadalupe, Sinaloa, Mexico; DOB 19 Feb 1971; POB Sinaloa, Mexico; nationality Mexico; citizen Mexico; C.U.R.P. TAQG710219HSLPND08 (Mexico) (individual) [SDNTK].

Dated: January 16, 2014.

Adam J. Szubin,

Director, Office of Foreign Assets Control.

[FR Doc. 2014–01571 Filed 1–27–14; 8:45 am]

BILLING CODE 4810–AL–P

U.S.-CHINA ECONOMIC AND SECURITY REVIEW COMMISSION

Notice of Open Public Hearing

AGENCY: U.S.-China Economic and Security Review Commission.

ACTION: Notice of open public hearing—January 22, 2014, Washington, DC

SUMMARY: Notice is hereby given of the following hearing of the U.S.-China Economic and Security Review Commission.

Name: Dennis C. Shea, Chairman of the U.S.-China Economic and Security Review Commission. The Commission is mandated by Congress to investigate, assess, and report to Congress annually on ''the national security implications of the economic relationship between the United States and the People's Republic of China.'' Pursuant to this mandate, the Commission will hold a public hearing in Washington, DC on January 30, 2014, ''China's Military Modernization and its Implications for the United States.''

Background: This is the first public hearing the Commission will hold during its 2014 report cycle to collect input from academic, industry, and government experts on national security implications of the U.S. bilateral trade and economic relationship with China. The hearing will examine the inputs to China's military modernization, including financial resources and China's defense industry, and the current and future capabilities of China's military. In addition, this hearing will assess the impact of China's military modernization on the United States and examine U.S. options.

The hearing will be co-chaired by Commissioners James M. Talent and Katherine C. Tobin. Any interested party may file a written statement by January 30, 2014, by mailing to the contact below. A portion of each panel will include a question and answer period between the Commissioners and the witnesses.

Location, Date and Time: Dirksen Senate Office Building, Room 608. Thursday, January 30, 2014, 9:00am—3:00pm Eastern Time. A detailed agenda for the hearing is posted to the Commission's Web site at *www.uscc.gov*. Also, please check our Web site for possible changes to the hearing schedule. *Reservations are not required to attend the hearing.*

FOR FURTHER INFORMATION CONTACT: Any member of the public seeking further information concerning the hearing should contact Reed Eckhold, 444 North Capitol Street, NW., Suite 602, Washington DC 20001; phone: 202–624–1496, or via email at *reckhold@uscc.gov*. *Reservations are not required to attend the hearing.*

Authority: Congress created the U.S.-China Economic and Security Review Commission in 2000 in the National Defense Authorization Act (Pub. L. 106–398), as amended by Division P of the Consolidated Appropriations Resolution, 2003 (Pub. L. 108–7), as amended by Public Law 109–108 (November 22, 2005).

Dated: January 22, 2014.

Michael Danis,

Executive Director, U.S.-China Economic and Security Review Commission.

[FR Doc. 2014–01516 Filed 1–27–14; 8:45 am]

BILLING CODE 1137–00–P

FEDERAL REGISTER

Vol. 79 Tuesday,

No. 18 January 28, 2014

Part II

Department of Agriculture

Animal and Plant Health Inspection Service

9 CFR Parts 56, 145, 146, et al.

National Poultry Improvement Plan and Auxiliary Provisions; Proposed Rule

DEPARTMENT OF AGRICULTURE

Animal and Plant Health Inspection Service

9 CFR Parts 56, 145, 146, and 147

[Docket No. APHIS–2011–0101]

RIN 0579–AD83

National Poultry Improvement Plan and Auxiliary Provisions

AGENCY: Animal and Plant Health Inspection Service, USDA.

ACTION: Proposed rule.

SUMMARY: We are proposing to amend the National Poultry Improvement Plan (NPIP, the Plan) and its auxiliary provisions by removing the descriptions of specific tests and sanitation procedures from the regulations. Instead, we would require tests to be performed and sanitation to be maintained in a manner approved by the Administrator. Approved procedures would be listed in an NPIP Program Standards document, which we would make available on the NPIP Web site. In addition, we are proposing to establish new compartment classifications for defined subpopulations of primary breeding turkeys, primary egg-type chickens, and primary meat-type chickens. We would also provide new or modified sampling and testing procedures for Plan participants and participating flocks. The proposed changes were voted on and approved by the voting delegates at the Plan's 2010 and 2012 National Plan Conferences. These changes would streamline the provisions of the Plan, keep those provisions current with changes in the poultry industry, and provide for the use of new sampling and testing procedures.

DATES: We will consider all comments that we receive on or before March 31, 2014.

ADDRESSES: You may submit comments by either of the following methods:

- Federal eRulemaking Portal: Go to *http://www.regulations.gov/#!documentDetail;D=APHIS-2011-0101-0001.*
- Postal Mail/Commercial Delivery: Send your comment to Docket No. APHIS–2011–0101, Regulatory Analysis and Development, PPD, APHIS, Station 3A–03.8, 4700 River Road Unit 118, Riverdale, MD 20737–1238.

Supporting documents and any comments we receive on this docket may be viewed at *http://www.regulations.gov/#!docketDetail;D=APHIS-2011-0101* or in our reading room, which is located in room 1141 of the USDA South Building, 14th Street and Independence Avenue SW., Washington, DC. Normal reading room hours are 8 a.m. to 4:30 p.m., Monday through Friday, except holidays. To be sure someone is there to help you, please call (202) 799–7039 before coming.

FOR FURTHER INFORMATION CONTACT: Dr. Denise Brinson, DVM, Acting Director, National Poultry Improvement Plan, VS, APHIS, USDA, 1506 Klondike Road, Suite 101, Conyers, GA 30094–5104; (770) 922–3496.

SUPPLEMENTARY INFORMATION:

Background

The National Poultry Improvement Plan (NPIP, also referred to below as ''the Plan'') is a cooperative Federal-State-industry mechanism for controlling certain poultry diseases. The Plan consists of a variety of programs intended to prevent and control poultry diseases. Participation in all Plan programs is voluntary, but breeding flocks, hatcheries, and dealers must first qualify as ''U.S. Pullorum-Typhoid Clean'' as a condition for participating in the other Plan programs.

The Plan identifies States, flocks, hatcheries, dealers, and slaughter plants that meet certain disease control standards specified in the Plan's various programs. As a result, customers can buy poultry that has tested clean of certain diseases or that has been produced under disease-prevention conditions.

The regulations in 9 CFR parts 145, 146, and 147 (referred to below as the regulations) contain the provisions of the Plan. The Animal and Plant Health Inspection Service (APHIS, also referred to as ''the Service'') of the U.S. Department of Agriculture (USDA, also referred to as ''the Department'') amends these provisions from time to time to incorporate new scientific information and technologies within the Plan.

The proposed amendments discussed in this document are consistent with the recommendations approved by the voting delegates to the last two National Plan Conferences, which were held on September 1 and 2, 2010, and September 25 through 27, 2012. Participants in both National Plan Conferences represented flockowners, breeders, hatcherymen, slaughter plants, and Official State Agencies from all cooperating States.

We are proposing two major changes to the regulations. One is to remove tests and detailed testing procedures, as well as sanitation procedures, from the regulations in part 147. The regulations in part 147 would instead indicate that tests and sanitation procedures must be approved by the Administrator and can be found in an NPIP Program Standards document. The other is to establish U.S. H5/H7 Avian Influenza Clean Compartment and U.S. Avian Influenza Clean Compartment classifications for defined subpopulations of primary breeding turkeys, primary egg-type breeding chickens, and primary meat-type breeding chickens. These changes are the first discussed below. The remaining proposed amendments are discussed in the order they would appear in the regulations.

Moving Tests and Sanitation Procedures From 9 CFR Part 147 to a Program Standards Document

The NPIP regulations in 9 CFR parts 145 and 146 contain requirements that must be observed by flocks that participate in the Plan. These requirements include requirements to test poultry for the specific disease addressed by each classification in which the flock participates. The procedures by which that testing is conducted are largely contained in 9 CFR part 147, subparts A, B, and D. Subpart A sets out blood testing procedures, subpart B sets out bacteriological examination procedures, and subpart D sets out molecular examination procedures, which currently include polymerase chain reaction (PCR) tests.

Some of these tests are referred to specifically in 9 CFR parts 145 and 146. In addition, §§ 145.14 and 146.13 contain some requirements for the use of various tests in part 147 to determine whether flocks are eligible for certain NPIP classifications.

Subpart C of part 147 contains various sanitation procedures. These are set out as guidelines for the production of healthy poultry, although some of them are referred to in parts 145 and 146.

We are proposing to move the tests and sanitation procedures in subparts A, B, C, and D of part 147 to an NPIP Program Standards document, which would be made available to the public on the NPIP's Web site.[1] We would take public comments on changes to the NPIP Program Standards through notices published in the **Federal Register**, rather than through the rulemaking process that we currently use.

We are proposing to take this action for several reasons. First, there are constant changes in the science and technology that go into developing effective, efficient tests. In order to have a successful voluntary program to

[1] *http://www.aphis.usda.gov/animal_health/animal_dis_spec/poultry/*

reduce the incidence of disease in poultry, we need to be able to update the NPIP testing procedures when new scientific evidence indicates that different procedures can increase the reliability of a test, or when new technology is developed to make a test more efficient or accurate.

In addition, new tests are also continually developed that can provide valuable alternatives to existing approved tests. For example, there has been a great deal of progress in developing PCR tests in recent years. Adding such tests allows NPIP participants to take advantage of the latest testing technology.

Similarly, the sanitation procedures used as best practices to prevent the introduction or spread of disease in a poultry flock are constantly changing, as more information becomes available about possible sources of infection and about the effectiveness of various means of preventing infection.

In the past, we have updated the regulations once every 2 years, following the biennial Plan Conference. However, with the continual changes in diagnostic science and testing technology, and in best practices for maintaining sanitation, the biennial update schedule has resulted in the regulations becoming out-of-date between updates. When this happens, sometimes the Plan's General Conference Committee (GCC) approves interim changes to the tests or sanitation procedures in accordance with the process outlined in § 147.43(d)(5)(iii).

However, it would make the program more effective if all participants could be made aware of the new tests and sanitation procedures as soon as possible, by updating a document recognized in the regulations as a resource for tests and sanitation procedures. Moving the testing and sanitation procedures to an NPIP Program Standards document, and replacing those procedures in the regulations with performance standards as described below, would allow for quicker updates to the allowed testing and sanitation procedures while continuing to allow for public comment on the testing and sanitation procedures. This would potentially make those updates available to producers and others 2 years or more earlier than they could be made available through the rulemaking process we currently use.

Finally, tests can be difficult to render in the regulations. The current regulations in §§ 147.11 and 147.12, for example, contain diagrams and flowcharts that are part of larger processes, all of which require several pages to describe in narrative format. We believe that it that would be easier to understand some of our tests if they were laid out in another fashion, which would be possible in an NPIP Program Standards document.

The regulations in parts 145 and 146 currently refer to specific sections within part 147. We are proposing to revise these references to state more generally that tests must be conducted and sanitation must be maintained in accordance with part 147. For example, we are proposing to replace references to conducting egg yolk testing for *Mycoplasma* in accordance with § 147.8 with references to conducting such testing in accordance with 9 CFR part 147 generally. We are proposing to replace references to maintaining flocks in *Mycoplasma* classifications in compliance with the *Mycoplasma* and *Salmonella* sanitation procedures in § 147.26 with references to maintaining the flock in accordance with part 147 with respect to *Mycoplasma* isolation, sanitation, and management. Similar changes would be made with respect to other tests and sanitation procedures. The specific changes we are proposing to make are set out in the regulatory text at the end of this document.

In subparts A, B, and D of part 147, we are proposing to indicate that blood testing, bacteriological examination, and molecular examination must be conducted in a manner approved by the Administrator. We would further state that approved testing procedures are listed in the NPIP Program Standards and that testing procedures may also be approved by the Administrator, as described in provisions we are proposing to add to subpart F of part 147. Subpart C would contain a similar placeholder for sanitation procedures.

Subpart F of part 147 currently sets out procedures for approving authorized laboratories (in § 147.51) and for approving diagnostic test kits that are not licensed by the Service (in § 147.52). We are proposing to reorganize this subpart and add a new section indicating where to find tests and sanitary procedures and how they are approved.

In our proposed reorganization, a new § 147.51 would set out definitions of key terms. *Administrator, Animal and Plant Health Inspection Service (APHIS), Plan or NPIP,* and *NPIP Technical Committee* would be defined as they are elsewhere in the regulations. We are also proposing to define *NPIP Program Standards* as a document that contains tests and sanitation procedures approved by the Administrator in accordance with proposed § 147.53 for use under the regulations in parts 145 and 146. The definition would indicate that this document may be obtained from the NPIP Web site at *http://www.aphis.usda.gov/animal_health/animal_dis_spec/poultry/* or by writing to the Service at National Poultry Improvement Plan, APHIS, USDA, 1506 Klondike Road, Suite 101, Conyers, GA 30094. We would add this definition to § 145.1 as well, as amendments to that part make it necessary to refer to the NPIP Program Standards in part 145.

Proposed § 147.52 would contain the current provisions for approving authorized laboratories, although rather than referring to the laboratories' ability to perform tests in accordance with part 147, the regulations would refer to performing tests in accordance with the NPIP Program Standards or other tests approved by the Administrator in accordance with proposed § 147.53. (We are also proposing to make some changes to this section that are unrelated to the removal of tests from the regulations; these other changes are discussed later in this document.)

Proposed § 147.53 would describe where approved tests and sanitation procedures could be found and the process for changing them. Paragraph (a) of proposed § 147.53 would set out performance standards for the approval tests and sanitation procedures. Paragraph (a)(1) would indicate that all tests that are used to qualify flocks for NPIP classifications must be approved by the Administrator as effective and accurate at determining whether a disease is present in a poultry flock or in the environment. Paragraph (a)(2) would indicate that all sanitation procedures performed as part of qualifying for an NPIP classification must be approved by the Administrator as effective at reducing the risk of incidence of disease in a poultry flock or hatchery.

Paragraph (b) of proposed § 147.53 would indicate that tests and sanitation procedures that have been approved by the Administrator may be found in the NPIP Program Standards. In addition, paragraph (b) would indicate that all tests that use veterinary biologics (e.g., antiserum and other products of biological origin) that are licensed or produced by the Service and used as described in the NPIP Program Standards are approved for use in the NPIP. This provision is found in current § 147.52(a).

Under paragraph (c) of proposed § 147.53, any new tests and sanitation procedures, or changes to existing tests and sanitation procedures, that have been approved by the NPIP in accordance with the process described in 9 CFR part 147 subpart E would be

approved by the Administrator. Subpart E describes the process currently used to consider changes to the NPIP regulations and to other aspects of the NPIP. As noted earlier, it includes provisions for making immediate changes to tests or sanitation procedures when necessary. Proposed paragraph (c) would indicate that NPIP participants may submit new tests and sanitation procedures, or changes to current tests and sanitation procedures, through that process.

Proposed paragraph (d) of § 147.53 would describe the processes for submitting other tests or sanitation procedures for approval by the Administrator and the NPIP Technical Committee. The NPIP Technical Committee is made up of technical experts on poultry health, biosecurity, surveillance, and diagnostics. The committee consists of representatives from the poultry and egg industries, universities, and State and Federal governments and is appointed by the Senior Coordinator and approved by the GCC. The Technical Committee conducts primary review of tests and sanitation procedures submitted at NPIP conferences. The process described in proposed paragraph (d) would be an alternative process for interested persons who do not want to or cannot submit their ideas for changes at an NPIP conference.

Under proposed paragraph (d), persons who wish to have a test or sanitation procedure approved by the Administrator would be able to apply for approval by submitting the test or sanitation procedure, along with any supporting information and data, to the NPIP. Upon receipt of such an application, the Technical Committee would review the test or sanitation procedure and any supporting information and data supplied with the application. If the Administrator and the Technical Committee determine the test or sanitation procedure to be of potential general use, the Administrator would submit the test or sanitation procedure for consideration by the GCC of the NPIP in accordance with subpart E of part 147, and the Administrator would respond with approval or denial of the test or sanitation procedure.

Proposed paragraph (e) would describe the procedure for taking public comment on changes to the Program Standards. When the Administrator approves a new test or sanitation procedure or a change to an existing test or sanitation procedure, APHIS would publish a notice in the **Federal Register** making available the test or sanitation procedure. The notice would also provide for a public comment period, typically of 60 days.

After the close of the public comment period, APHIS would publish a notice in the **Federal Register** indicating that the test or sanitation procedure will be added to the NPIP Program Standards, or that the NPIP Program Standards will be updated to reflect changes to an existing test or sanitation procedure, if:

- No comments were received on the notice;
- The comments on the notice supported the action described in the notice; or
- The comments on the notice were evaluated but did not change the Administrator's determination that approval of the test or sanitation procedure is appropriate based on the standards in proposed § 147.53(a).

If comments indicate that changes should be made to the test or sanitation procedure as it was made available in the initial notice, APHIS will publish a notice in the **Federal Register** indicating that changes were made to the initial test or sanitation procedure.

Whenever APHIS adds or makes changes to tests or sanitation procedures, APHIS will make available a new version of the NPIP Program Standards that reflects the additions or changes. The new version of the NPIP Program Standards would also be available on the NPIP Web site.

If comments present information that causes the Administrator to determine that approval of the test or sanitation procedure would not be appropriate, APHIS will publish a notice informing the public of this determination after the close of the comment period.

We are proposing to move the provisions for approval of test kits from § 147.52 to § 147.54. As noted earlier, proposed § 147.53 would include the provisions currently found in § 147.52(a), meaning it would not be necessary to include § 147.52(a) in proposed § 147.54. Instead, paragraph (b) of § 147.52 would become the entire text of § 147.54.

Paragraph (c) of current § 147.52 lists specific test kits that have been approved for use. We would move this list to the NPIP Program Standards, and a new paragraph (f) would indicate that the list of approved test kits could be found in that document.

We believe these changes would make it easier for APHIS, Official State Agencies, and the poultry industry to implement timely changes to tests and sanitation procedures, while continuing to make those procedures publicly available in an easily accessible document. We welcome public comment on this approach.

At the 2010 NPIP Plan Conference, attendees approved some changes to existing tests and sanitation procedures in part 147, as well as two new molecular examination procedures and a new set of sanitation procedures. (The last of these is discussed briefly under the next heading in this document.)

At the 2012 NPIP Plan Conference, attendees approved a laboratory procedure to establish inter-laboratory equivalence for molecular identification of Plan diseases sampled in the poultry upper respiratory tract; amendments to current approved molecular examination procedures to allow for the use of equally effective diagnostic procedures; new diagnostic test kits; and a statement on the use of cloacal swabs from waterfowl as specimens for the reverse real-time PCR assay in certain circumstances.

If this proposed rule is finalized and the regulations are revised to remove tests and sanitation procedures, we will include the changes to existing tests and sanitation procedures and the new tests and sanitation procedures that were approved at the 2010 and 2012 Plan Conferences in the NPIP Program Standards. We are providing a draft version of the Program Standards that contains these new or revised tests and sanitation procedures, as well as the existing tests and sanitation procedures, to the public for review and comment. It is available on Regulations.gov (see **ADDRESSES** above for instructions on accessing Regulations.gov).

U.S. Avian Influenza Clean Compartment Classifications for Defined Subpopulations of Poultry

We are proposing to establish a new U.S. H5/H7 Avian Influenza Clean Compartment classification for defined subpopulations of primary breeding turkeys and new U.S. Avian Influenza Clean Compartment classifications for defined subpopulations of primary egg-type breeding chickens and primary meat-type breeding chickens. These classifications are based on the compartmentalization guidelines issued by the World Organization of Animal Health (OIE), an international standard-setting body for veterinary health issues in which the United States participates. If these Avian Influenza Clean Compartment classifications are internationally recognized, they would add an option for producers wishing to ensure uninterrupted trade in breeding establishment flocks and products in the event of an avian influenza (AI) outbreak.

The OIE defines a compartment as ''an animal subpopulation contained in one or more establishments under a

common biosecurity management system with a distinct health status with respect to a specific disease or specific diseases for which required surveillance, control and biosecurity measures have been applied for the purpose of international trade.'' [2] An animal subpopulation is defined as ''a distinct part of a population identifiable according to specific common animal health characteristics,'' in this case a common biosecurity level. A subpopulation can be one flock (which the OIE defines as ''a number of animals of one kind kept together under human control or a congregation of gregarious wild animals'') or can be composed of multiple flocks.

Currently, when outbreaks of H5/H7 AI occur, States impose movement restrictions on States or areas within a State that are considered to be affected with H5/H7 AI. In addition, other countries may impose restrictions on the trade of poultry and poultry products from the State or area. In these situations, the remainder of the United States is still considered free of the disease. (The OIE refers to any area treated separately from another area in a country with respect to a disease as a ''zone.'') Individual breeding poultry producers, meanwhile, have been able to use the appropriate AI classification to demonstrate that their flocks, and the hatching eggs, chicks, and poults produced from them, undergo routine serological surveillance for AI and are free from disease. However, when there is an outbreak of H5/H7 AI in a zone (a defined geographical region), all producers within the zone are typically considered to be affected with H5/H7 AI, regardless of whether the disease is present in their flocks, and are thus subject to movement restrictions, including restrictions on export of their products.

As implied above, besides resulting in domestic movement restrictions, the presence of H5/H7 AI in a zone can interrupt exports from that zone. Although low pathogenicity AI (LPAI) is normally not a disease of concern, the H5 and H7 subtypes of LPAI can mutate into highly pathogenic AI (HPAI), a serious disease of birds and other species, including humans. The OIE refers to H5/H7 LPAI and HPAI collectively as notifiable AI (NAI), while the NPIP regulations in part 145 have historically referred to H5/H7 AI as the subtypes of concern. The proposed compartment classifications refer to NAI to be consistent with the OIE standards, although the terms are equivalent.

Although the proposed compartment classifications are concerned only with NAI, the classifications' titles would reflect the flock-level NPIP AI classifications that play crucial roles in the proposed compartment classifications: The primary breeding turkey AI classification refers to H5/H7 AI, and the primary egg-type breeding chicken and meat-type breeding chicken AI classifications refer to AI generally.

As the OIE states, the essential difference between zoning and compartmentalization is that the recognition of zones is based on geographical boundaries, whereas the recognition of compartments is based on epidemiologic boundaries, which are established by management practices and biosecurity. The new U.S. Avian Influenza Clean Compartment classifications would allow primary breeder companies to establish epidemiological boundaries for subpopulations of primary breeding turkeys, primary egg-type chickens, and primary meat-type chickens by establishing management practices and biosecurity for those subpopulations. If recognized as compartments, these subpopulations would not be considered to be affected by an NAI outbreak, even if part or all of the subpopulation was located within a State or an area within a State that was affected with H5/H7 AI, unless required active and passive surveillance showed the disease to be present within the compartment. For example, if a population of primary breeding turkeys located in two States was considered a compartment by our trading partners, and an outbreak of NAI occurred in one of those States, international trade in the products of that compartment from both States could continue uninterrupted. Thus, establishing the U.S. H5/H7 Avian Influenza Clean Compartment classification for primary breeding turkeys and the U.S. Avian Influenza Clean Compartment classifications for primary breeding egg-type chickens and meat-type chickens could give producers additional options with respect to international trade if the compartments are internationally recognized.

We are proposing to add the compartment classifications to the regulations in new §§ 145.45, 145.74, and 145.84, for primary breeding turkeys, primary egg-type breeding chickens, and primary meat-type breeding chickens, respectively. In part 145, the existing subparts for each of those types of poultry contain sections setting out classifications for individual flocks and, in the case of turkeys, for States; we believe that new sections with compartment-level classifications would help to indicate that the classifications apply to entire subpopulations of poultry, and not just individual flocks. The compartment provisions described below would be identical for turkeys, egg-type chickens, and meat-type chickens, except that references to existing flock classifications would be different for each type of poultry.

Proposed paragraph (a) of the new sections would contain the provisions of the U.S. H5/H7 Avian Influenza Clean Compartment classification for turkeys and the U.S. Avian Influenza Clean Compartment classification for egg-type chickens and meat-type chickens. The introductory text of paragraph (a) would state that the compartment program is intended to be the basis from which the primary turkey, egg-type chicken, or meat-type chicken breeding-hatchery industry may demonstrate the existence and implementation of a program that has been approved by the Official State Agency and the Service to establish a compartment consisting of a primary breeding-hatchery company that is free of NAI. This compartment would have the purpose of protecting the defined subpopulation and avoiding the introduction and spread of NAI within that subpopulation by prohibiting contact with other commercial poultry operations, other domestic and wild birds, and other intensive animal operations. (The last includes such operations as swine operations, in which the AI virus can also circulate.)

Proposed paragraph (a)(1) would set out the conditions for definition of the compartment. The primary breeder company seeking to establish a compartment would have to define the compartment with respect to NAI based on the guidelines established by the OIE in the Terrestrial Animal Health Code and the guidelines in proposed paragraph (a). Specifically, the company would have to use a comprehensive biosecurity program to define the compartment as a subpopulation of poultry with a health status for NAI that is separate from birds and poultry outside the compartment. The Official State Agency and the Service would have to approve all documentation submitted to substantiate the defined compartment as adequate to qualify for epidemiological separation from other potential sources of infection of NAI. Guidelines for the definition of the compartment would include:

[2] The OIE's Terrestrial Animal Health Code is available for review at *http://www.oie.int/en/international-standard-setting/terrestrial-code/access-online/*. The definition of a compartment is contained in the glossary. Other chapters of the Code that are relevant to compartmentalization are 4.3, ''Zoning and compartmentalisation,'' and 4.4, ''Application of compartmentalisation.''

Definition and description of the subpopulation of birds and their health status. All poultry included in the compartment would have to be U.S. H5/H7 Avian Influenza Clean in accordance with the classification in § 145.43(g) (for turkeys), or U.S. Avian Influenza Clean in accordance with the classifications in §§ 145.73(f) (for egg-type chickens) or 145.83(g) (for meat-type chickens). The poultry would also have to be located in a State that has an initial State response and containment plan approved by APHIS under § 56.10 and that participates in the diagnostic surveillance program for H5/H7 LPAI as described in § 145.15. States that have this plan and program in place are cooperators in the voluntary control program for NAI. Within the compartment, all official tests for AI, as described in § 145.14(d), would have to be conducted in NPIP authorized laboratories or in State or Federal laboratories.

In addition, the company would have to provide to the Service upon request any relevant historical and current NAI-related data for reference regarding surveillance for the disease within the compartment. Upon request, the company would also work with the Official State Agency to obtain NAI-related data for other bird populations located in the State. This would allow APHIS to evaluate the previous disease status of the compartment and other bird populations located in the State, if necessary.

Description of animal identification and traceability processes. Animal identification and traceability are essential components of a rigorous biosecurity and flock management plan. Accordingly, the primary breeder company would have to include a description of its animal identification and traceability records, including various APHIS forms, set and hatch records, egg receipts, and egg/chick invoices for the subpopulation. Documentation would also have to include breed identification (NPIP stock code). The Service would ensure that an effective flock identification system and traceability system are in place.

Definition and description of the physical components or establishments of the defined compartment. This documentation would establish that the defined compartment is epidemiologically separated from other poultry and bird populations. The documentation would have to be approved by the Official State Agency and the Service as indicating adequate epidemiological separation to maintain the compartment's separate health status with respect to NAI. The documentation would include descriptions of:

- The physical and spatial factors that separate the compartment from surrounding bird populations and affect the biosecurity status of the compartment.
- The relevant environmental factors that may affect exposure of the birds to AI.
- The functional boundary and fencing that are used to control access to the compartment.
- Facilities and procedures to prevent access by wild birds and to provide separation from other relevant hosts.
- The relevant infrastructural factors that may affect exposure to AI, including the construction and design of buildings or physical components, cleaning and disinfection of buildings and physical components between production groups with quality assurance verification, cleaning and disinfection of equipment, and introduction of equipment or material into the compartment.

Definition and description of the functional relationships between components of the defined compartment. Functional relationships between components of the compartment would include traffic movement and flow at and among premises, personnel movement at and among premises, exposure to live bird populations, and any other factors that could affect biosecurity of the compartment.

To address risks associated with functional relationships, all physical components of the compartment would have to be maintained in compliance with hygiene and biosecurity procedures for poultry primary breeding flocks and hatcheries in accordance with 9 CFR part 147. These procedures are best practices designed to address possible sources of infection within a compartment and to prevent the introduction of disease into a compartment. As part of this action, we would establish these approved procedures in the sanitation procedures section of the NPIP Program Standards. The documentation submitted by the company would have to demonstrate the company's consideration of and plan for complying with these procedures. In particular, the company would have to provide a biosecurity plan for the compartment and all included components. The plan would have to include:

- Requirements that company employees and contract growers limit their contact with live birds outside the compartment;
- An education and training program for company employees and contractors;
- Standard operating procedures for company employees, contractors, and outside maintenance personnel;
- Requirements for company employees and non-company personnel who visit any premises within the compartment;
- Company veterinary infrastructure to ensure flock monitoring and disease diagnosis and control measures;
- Policies for management of vehicles and equipment used within the compartment to connect the various premises;
- Farm site requirements (location, layout, and construction);
- Pest (insect and rodent) management program;
- Cleaning and disinfection process; and
- Requirements for litter and dead bird removal and/or disposal.

Description of other factors important for maintaining the compartment. The company veterinary infrastructure would assess sanitary measures, environmental risk factors, and management and husbandry practices that relate to the separation of the compartment and the health status of the birds contained within the compartment that may affect risk of exposure to NAI. This would include internal monitoring and auditing systems (e.g. quality assurance and quality control programs) to demonstrate the effectiveness of the compartment. We would provide the company, upon request, with information on the epidemiology of NAI and the associated risk pathways in which the components of the compartment are located.

Based on the documentation provided, as well as any other information the Service and the Official State Agency determine to be necessary, the Service and the Official State Agency would approve or deny the classification of the compartment as U.S. H5/H7 Avian Influenza Clean or U.S. Avian Influenza Clean.

Proposed paragraph (a)(2) would set out requirements for the company to maintain the U.S. Avian Influenza Clean Compartment classification once it has been established.

The primary breeder company's management of biosecurity, surveillance, and disease control efforts would have to be uniform and equivalent among all components that are a part of the compartment. Oversight and inspection of these management practices would be conducted by the company's licensed, accredited veterinarians. Specifically, veterinary

staff from the Official State Agency and the NPIP would work in partnership with licensed, accredited company veterinarians to train and certify auditors through Service-approved workshops. The trained auditors would conduct biosecurity and operational audits and inspections of facilities and components at least once every 2 years to ensure the integrity of the compartment. These audits would include evaluation of the critical control points and standard operating practices within the compartment, verification of the health status of the flock(s) contained within the compartment, and examination of the biosecurity and management system of the integrated components of the compartment.

The company would also need to maintain its AI Plan classifications for all flocks and products that comprise the compartment, continue to conduct surveillance for NAI within the compartment in accordance with § 145.15, and conduct tests in State and Federal laboratories or in NPIP authorized laboratories. Accredited veterinarians would be responsible for the enforcement of active and passive surveillance of NAI in primary breeder flocks. Baseline health status would have to be maintained and documented for all flocks or subpopulations within the compartment, indicating the dates and negative results of all avian influenza surveillance and monitoring testing, the dates and history of last disease occurrence (if any), the number of outbreaks, and the methods of disease control that were applied.

Documentation of surveillance and testing would be maintained in the company's database and would be verified as required by the Service and/or the Official State Agency, in addition to the reporting required for the AI Clean Plan classifications for all flocks and products and the reporting required under § 145.15.

Proposed paragraph (a)(3) would discuss the activities the Service, in cooperation with the Official State Agencies, will conduct to maintain the compartment once it has been established. This paragraph would clearly spell out how APHIS and the Official State Agencies would work to ensure the continued integrity of any recognized compartments, potentially helping to increase international acceptance of the proposed compartment classifications. Generally, the Service's responsibilities would include:

- Oversight of the establishment and management of compartments;
- Establishment of effective partnerships among the Service, the Plan, and the primary breeder industry;
- Approval or denial of classification of compartments as U.S. H5/H7 Avian Influenza Clean or U.S. Avian Influenza Clean under proposed paragraph (a)(1);
- Official certification of the health status of the compartment, and commodities that may be traded from it, through participation in the Plan for avian diseases, including the active surveillance programs described in §§ 145.43(g), 145.73(f), or 145.83(g), and diagnostic surveillance for H5/H7 LPAI as described in § 145.15;
- Conducting audits of compartments at least once every 2 years to confirm that the primary breeding company's establishments are epidemiologically distinct and pathways for the introduction of disease into the compartment are closed through routine operational procedures and to evaluate and assess the management and husbandry practices relating to biosecurity to determine whether they are in compliance with hygiene and biosecurity procedures for poultry primary breeding flocks and hatcheries in accordance with part 147;
- Providing, upon request, model plans for management and husbandry practices relating to biosecurity in accordance with part 147, risk evaluations in conjunction with the primary breeder industry (including disease surveillance such as VS Form 9–4, ''Summary of Breeding Flock Participation''), and diagnostic capability summaries and systems for initial State response and containment plans in accordance with § 56.10;
- Publicizing and sharing compartment information with international trading partners, upon request, to establish approval and recognition of the compartment, including timeliness and accuracy of disease reporting and surveillance measures as described in §§ 145.15 and 145.43(g), 145.73(f), or 145.83(g).

Proposed paragraph (a)(4) would address emergency response and notification. In the case of a confirmed positive of NAI in the subpopulation of the compartment, the management of the compartment would notify the Service. The Service would immediately suspend the status of the compartment. Compartments would be eligible to resume trade with importing countries only after the compartment has adopted the necessary measures to reestablish the biosecurity level and confirm that NAI is not present in the compartment and the Service has reevaluated the management and biosecurity measures of the compartment and approved said compartment for trade.

Definition of H5/H7 LPAI

The regulations in 9 CFR part 56 set out conditions for the payment of indemnity for costs associated with poultry that are infected with or exposed to H5/H7 LPAI and provisions for a cooperative control program for the disease. This control program involves APHIS, the Official State Agencies that cooperate with APHIS in the administration of the Plan, and Cooperating State Agencies. If the Official State Agency can enforce the movement restrictions and other provisions of part 56, it is the Cooperating State Agency; otherwise, the Cooperating State Agency is the State animal health authority. Part 146 of the regulations contains various active surveillance programs for H5/H7 LPAI in commercial poultry. The terms *H5/H7 low pathogenic avian influenza (LPAI)* and *H5/H7 LPAI virus infection (infected)* are defined in §§ 56.1 and 146.1.

We are proposing to make two editorial changes to the current definition of H5/H7 LPAI. The definition of this term in § 146.1 currently indicates that an H5/H7 AI virus can be considered LPAI when it has an intravenous pathogenicity index test in 6-week-old chickens less than 1.2 or less than 75 percent mortality in 4- to 8-week-old chickens infected intravenously. We would amend the definition to indicate that the pathogenicity index test can be less than or equal to 1.2, and to clarify that the virus causes the mortality in the intravenously infected chickens.

The definition of H5/H7 LPAI in § 56.1 omits the criterion of less than 75 percent mortality in 4- to 8-week-old chickens infected intravenously; we are proposing to add this criterion to the definition in § 56.1, with the proposed wording discussed above, and to make the same clarification about the pathogenicity index test as we are proposing in § 146.1. We are also proposing to add the proposed definition of H5/H7 LPAI to § 145.1, which sets out definitions for the NPIP programs for commercial breeding poultry, as the term H5/H7 LPAI is used extensively in 9 CFR part 145.

Along with providing various diagnostic criteria, the *H5/H7 LPAI virus infection (infected)* definition provides that, in the case of isolated serological positive results, H5/H7 LPAI infection may be ruled out on the basis of a thorough epidemiological investigation that does not demonstrate

further evidence of H5/H7 LPAI infection, as determined by APHIS.

We are proposing to amend this definition to indicate that, in the case of isolated serological positive results, the Cooperating State Agency and the Official State Agency would participate in the determination that a thorough epidemiological investigation does not demonstrate further evidence of H5/H7 LPAI infection. As these agencies cooperate in the administration of the Plan and the H5/H7 LPAI control provisions in part 56, it would be appropriate to involve them in making such a determination.

It is not necessary to add this definition to § 145.1, because the term ''H5/H7 LPAI infection'' is not used in that part.

Additional Information on Compliance Agreements

Section 56.4 sets out provisions for determination of indemnity amounts, including indemnity provided for cleaning and disinfection of premises, conveyances, and materials that came into contact with poultry that are infected with or exposed to H5/H7 LPAI. When indemnity is requested for disposal of poultry, the regulations in paragraph (a)(2) of § 56.4 require that disposal be performed under a compliance agreement between the claimant, the Cooperating State Agency, and APHIS. Similarly, when indemnity is requested for cleaning and disinfection of premises, conveyances, and materials or for disposal of those articles, the regulations in § 56.4(c) require that such activities be performed under a compliance agreement. Requiring such activities to be performed under compliance agreements ensures that the claimant, the Cooperating State Agency, and APHIS have a common understanding of what work is to be performed before that work is undertaken and indemnity is requested for it.

The current regulations do not specify anything about the compliance agreement beyond the fact that it must exist for certain costs to be eligible for indemnification. In the course of responding to H5/H7 LPAI outbreaks, we have developed some more specific requirements for compliance agreements to ensure that they effectively document the activities eligible for indemnity and include other information necessary for the prompt payment of indemnity. We are proposing to add a new paragraph (d) to § 56.4 to set out requirements for a compliance agreement, to ensure a common understanding of what information a compliance agreement must contain and how it will be used.

Paragraph (d) would state that the compliance agreement is a comprehensive document that describes the depopulation, disposal, and cleaning and disinfection plans for poultry that were infected with or exposed to H5/H7 LPAI, or a premises that contained such poultry. It would also indicate that the compliance agreement sets out APHIS responsibilities, owner responsibilities, and Cooperating State Agency responsibilities. The compliance agreement would have to include the owner's name and the name and address of the affected premises. The compliance agreement would have to have signatories that include, but are not necessarily limited to, the owner, the grower (if applicable), the Cooperating State Agency representative, the State veterinarian, and the APHIS area supervisor. Concurrence from these parties would help to prevent misunderstandings.

In addition, the compliance agreement would be required to contain a flock plan with estimated cost breakdowns that include labor, materials, personal protective equipment, travel expenses for personnel involved, and any additional information deemed necessary by the Service. This would ensure a common understanding of the activities to be performed under the compliance agreement.

A compliance agreement is typically submitted in multiple stages as work is undertaken, as changing circumstances can necessitate changes in the compliance agreement. However, it is important that the final compliance agreement be submitted promptly to APHIS so that indemnity can be paid promptly. Accordingly, we would require the final compliance agreement to be submitted to the Service no later than 30 days after the premises is released from quarantine for H5 or H7 LPAI.

Controlled Marketing

Section 56.5 sets out provisions for destruction and disposal of poultry and cleaning and disinfection of premises, conveyances, and materials in the event of an H5/H7 LPAI outbreak. Paragraph (c)(1) of § 56.5 provides that, at the discretion of the Cooperating State Agency and APHIS, poultry that has been infected with or exposed to H5/H7 LPAI can be moved for controlled marketing in accordance with the initial State response and containment plan described in § 56.10, if they are not moved until 21 days after the acute phase of the infection and if they are tested within 7 days of movement and found to be free of the virus.

We are proposing to remove the requirement that poultry may only be moved for controlled marketing after 21 days have passed since the acute phase of the infection. As LPAI is by definition a low pathogenicity disease, it can be difficult to determine the exact acute phase of the infection. Determining the acute phase has caused serious delays in the marketing of LPAI-infected and -exposed flocks.

If States want to permit controlled marketing in the event of an LPAI outbreak, States are required to include provisions for it in their initial State response and containment plans for LPAI. (Section 56.10 sets out the requirements for initial State response and containment plans.) Such provisions must include adequate safeguards to prevent the transmission of the virus from the flock to be moved for controlled marketing, and we are proposing to add two new requirements to paragraph (c) of § 56.5 to ensure that flocks moved for controlled marketing do not spread the virus. Most importantly, the flocks would still need to be tested within 7 days of movement and found to be free of the virus. We believe these constitute adequate safeguards against the spread of LPAI virus. We would replace the 21-day requirement with a requirement that the poultry may not be transported for controlled marketing until approved by the Cooperating State Agency in accordance with the initial State response and containment plan.

We are proposing to add two requirements to the existing controlled marketing requirements, in new paragraphs (c)(1)(iii) and (c)(1)(iv). Proposed paragraph (c)(1)(iii) would require that poultry moved for controlled marketing be moved to slaughter along routes that avoid other commercial poultry operations whenever possible. It would also require all load-out equipment, trailers, and trucks used on premises that have housed poultry that were infected with or exposed to H5/H7 LPAI to be cleaned and disinfected and not enter other poultry premises or facilities for 48 hours after removing such poultry from their premises. These requirements would reduce the risk that poultry and equipment moved for controlled marketing would spread H5/H7 LPAI to other poultry premises or facilities.

Proposed paragraph (c)(1)(iv) would require poultry moved for controlled marketing to be the last poultry marketed during the week they are marketed. Marketing poultry moved for controlled marketing at the end of the

week gives the marketer the weekend to conduct thorough cleaning and disinfection of the market premises, to further mitigate the risk of H5/H7 LPAI transmission. It also minimizes cross traffic with other poultry arriving at the plant.

Updates to Cleaning and Disinfection Guidelines for H5/H7 LPAI

Paragraph (d) of § 56.5 sets out guidelines for the development of a cleaning and disinfection plan for a premises and the materials and conveyances on that premises. We are proposing several updates to those guidelines based on our experience conducting cleaning and disinfection for H5/H7 LPAI and on the latest scientific information regarding the disease.

We note that not all of the guidelines may be applicable to all premises. The initial State response and containment plans for H5/H7 LPAI described in § 56.10 are expected to provide cleaning and disinfection plans tailored to poultry production conditions in each State. Nevertheless, the guidelines in paragraph (d) provide a general model for the development of cleaning and disinfection plans in the initial State response and containment plans, which is why it is important to update them.

Paragraph (d)(1) provides guidelines for preparing for cleaning and disinfection. Paragraph (d)(1)(i) recommends that persons conducting cleaning and disinfection secure and remove all feathers that might blow around outside the house in which the infected or exposed poultry were held by raking them together and burning the pile. We are proposing to indicate that any debris should be secured as well, and that these materials should not be raked together and burned but rather gathered and pushed into the affected poultry house. This would allow the feathers and other materials to be addressed in the confined space of the house at the same time as the materials found inside the house, reducing the risk of spreading H5/H7 LPAI.

Paragraph (d)(1)(iii) recommends that the house in which the poultry were held be closed, maintaining just enough ventilation to remove moisture, and heated to 100 °F to begin composting. After this, the house should be left undisturbed for a minimum of 21 days and as long as possible thereafter to allow as much H5/H7 LPAI virus as possible to die a natural death. Paragraph (d)(1)(iv) then recommends that the house be reheated to 100 °F for the 72 hours prior to cleaning and disinfection. However, the initial heating to 100 °F, the 21-day period, and the subsequent reheating are not necessary, given current knowledge about the time the virus can survive outside of its host and the environmental requirements for its survival. Leaving the house undisturbed for 72 hours, rather than for 21 days and without any heating requirements, would kill H5/H7 LPAI virus that may be present in the house and in any feathers and debris collected in the house. Therefore, we are proposing to indicate that the house should be left undisturbed for a minimum of 72 hours, and we would not indicate that the house should be heated before this period or reheated prior to cleaning and disinfection.

Paragraph (d)(2) of § 56.5 provides guidelines for the cleaning and disinfection process. Paragraph (d)(2)(i) addresses disposal of manure, debris, and feed. The paragraph indicates that manure, debris, and feed should be composted in the house if possible. We are proposing to amend this guideline to indicate that windrowing should be the composting method used when composting is possible. Windrowing (piling the material to be composted into long rows) is suitable to composting large volumes of material, if necessary, and also allows for turning the composted material if necessary to increase the effectiveness of the composting.

The paragraph goes on to discuss various means of disposal of manure, debris, and feed. We are proposing to add a sentence to the guidelines indicating that manure, debris, and feed may be composted on site, left in an undisturbed pile on site, or removed from the site in covered vehicles for disposal. We are also proposing to indicate that land application of manure, debris, and feed should only be performed in accordance with the initial State response and containment plan for H5/H7 LPAI described in § 56.10. Land application can present disease and environmental hazards if not performed in accordance with approved guidelines.

Finally, the current guidelines indicate that the house should not be cleaned out and litter should not be moved or spread until any H5/H7 LPAI virus that may have contaminated the manure and litter is dead, as determined by the Cooperating State Agency. This conflicts with guidance earlier in the paragraph in which a system may be set up for moving manure, debris, and feed to an approved site for burial, piling, or composting. Instead, we would indicate that houses should be cleaned out and litter should be moved or spread only as determined by the Cooperating State Agency and in accordance with the initial State response and containment plan.

Paragraph (d)(3) of § 56.5 provides guidelines for activities after cleaning and disinfection. It currently indicates that premises should be checked for virus before repopulation in accordance with the initial State response and containment plan. We are proposing to amend this to indicate that premises should remain empty until testing provides negative virus detection results and the premises has been checked by the Cooperating State Agency in accordance with the initial State response and containment plan. The proposed text would indicate better what type of check should be made for virus on the premises.

Testing Flocks Before Movement Into Breeder Production Facilities

In § 145.3, paragraph (c) requires that participants submit reports on each breeding flock before the birds in the flock reach 24 weeks of age, or, in the case of ostriches, emus, rheas, and cassowaries, before the birds reach 20 months of age. This report includes identifying information, the source of the birds, and the intended classification of the birds. However, the Plan currently does not contain a requirement that participating flocks be tested for their classifications before moving into breeder production facilities.

It is a common practice in breeding poultry production to move pullets (sexually immature domesticated chickens grown for the primary purpose of producing hatching eggs) or spiking males (males used to increase the fertility of aging breeder hens) from a single poultry house to multiple hen houses. The movement of untested pullets and spiking males puts the industry at risk for unknowingly spreading Plan diseases. Therefore, we are proposing to add a new paragraph (d) to § 145.3 that would require flocks to be qualified for their intended Plan classifications before being moved into breeder production facilities. This proposed change would ensure that poultry being moved into breeder production facilities are free of diseases in their intended Plan classifications.

In paragraph (c) of § 145.3, we are also proposing to make a gender-specific reference gender-neutral and to add the word ''and'' to a series currently written as ''ostriches, emus, rheas, cassowaries.''

Avian Influenza Testing

In § 145.14, which discusses approved tests for breeding poultry and commercial poultry, paragraph (d) sets

out official tests for AI. In § 146.13, which discusses approved tests for commercial poultry, paragraph (b) addresses the same topic as § 145.14(d).

Approved antibody detection tests for AI are set out in paragraph (d)(1) of § 145.14 and (b)(1) of § 146.13. One of these tests is the agar gel immunodiffusion (AGID) test. While this test is reliable for most poultry, it is not reliable for waterfowl. Because the regulations do not currently reflect this, we are proposing to add a statement that the AGID test is not recommended for use in waterfowl.

Paragraph (d)(2)(ii) of § 145.14 and paragraph (b)(2)(ii) of § 146.13 discuss testing for AI with a USDA-licensed type A influenza antigen capture immunoassay (ACIA). These paragraphs indicate that positive results from the ACIA must be further tested by Federal Reference Laboratories using appropriate tests for confirmation. The ACIA test, a screening test typically used on chicken and turkey flocks, is rapid and sensitive but can result in false positives. Conducting another confirmatory test before submitting to a Federal Reference Laboratory would ensure that fewer false positive results are submitted to Federal Reference Laboratories.

Therefore, we are proposing to amend §§ 145.14(d)(2)(ii)(B) and 146.13(b)(2)(ii)(B) to require all chicken and turkey flocks that test positive on the ACIA to be retested using the real-time reverse transcriptase/polymerase chain reaction assay (RRT–PCR) or using virus isolation. If those tests are positive for AI, those results would be further tested by Federal Reference Laboratories for confirmation.

We are proposing to make one other minor change to the AI testing requirements. Paragraphs (d)(2)(i) of § 145.14 and paragraph (b)(2)(i) of § 146.13 both require the RRT–PCR to be conducted using the National Veterinary Services Laboratories (NVSL) official protocol for the RRT–PCR, which has been numbered AVPR01510. However, NVSL now uses a new numbering system, meaning the number of the official protocol has changed, and it may change again in the future. To ensure that the regulations do not point to an incorrect protocol number, we are removing the protocol number from the regulations in §§ 145.14(d)(2)(i) and 146.13(b)(2)(i).

Nest Clean Hatching Eggs for Breeding Chickens

The regulations in §§ 145.22, 145.32, 145.72, and 145.82 provide requirements for participation in the NPIP for multiplier egg-type breeding chickens, multiplier meat-type breeding chickens, primary egg-type breeding chickens, and primary meat-type breeding chickens, respectively. Paragraph (b) of each of these sections requires hatching eggs produced by these flocks to be fumigated according to the procedure in § 147.25 or otherwise sanitized.

Eggs that are collected from nests frequently, to keep them clean without further processing, are known in the poultry industry as ''nest clean'' eggs. In recent years, the chicken industry has found that nest clean eggs hatch better and provide a better chick than other eggs, even when they are sanitized. Consequently, it has become standard practice in both the egg-type and meat-type industries to avoid sanitizing eggs and instead insist on nest clean eggs.

To recognize this practice, we are proposing to amend §§ 145.22(b), 145.32(b), 145.72(b), and 145.82(b) to state that hatching eggs produced by the relevant flocks should be nest clean, and that they may be fumigated in accordance with part 147 or otherwise sanitized.

Changes to AI Clean Programs for Egg-Type Chicken Breeding Flocks

The regulations set out requirements for the U.S. Avian Influenza Clean classification for multiplier egg-type chicken breeding flocks and primary egg-type chicken breeding flocks in §§ 145.23(h) and 145.73(f), respectively. We are proposing to amend certain provisions in these programs and revise their requirements for spent fowl testing.

After breeding chickens are no longer productive, they are moved to slaughter to capture their meat value. This movement provides an opportunity for additional testing to verify a breeding flock's AI Clean status. Currently, paragraph (h)(2) of § 145.23 and paragraph (f)(2) of § 145.73 require that, during each 90-day testing period, all spent fowl up to a maximum of 30 must be tested and found negative within 21 days prior to movement to slaughter. Rather than requiring up to 30 spent fowl to be tested, we are proposing to require instead the testing of a sample of at least 11 birds prior to movement to slaughter. Generally, the entire flock of egg-type breeding chickens will be moved to slaughter at one time. Testing 11 birds per flock is consistent with the testing requirements for meat-type commercial chickens moved to slaughter under the U.S. H5/H7 Avian Influenza Monitored program in § 146.33, and would provide adequate assurance that the flock is free of AI.

In addition, both the multiplier and primary egg-type chicken AI Clean programs indicate that to qualify for the classification, a minimum of 30 birds must be tested negative for antibodies to AI when more than 4 months of age. We are proposing to clarify that the birds must be tested and found negative. We are also proposing to remove the words ''for antibodies,'' as some tests approved in § 145.14 for AI do not test for antibodies but rather for the AI virus itself; this change would allow participants in these AI Clean programs the opportunity to use all of the tests approved in § 145.14 to qualify for these programs.

Changes to AI Clean Programs for Meat-Type Chicken Breeding Flocks

The regulations set out requirements for the U.S. Avian Influenza Clean classification for multiplier meat-type chicken breeding flocks and primary meat-type chicken breeding flocks at §§ 145.33(l) and 145.83(g), respectively. We are proposing to amend certain provisions in these programs and revise their requirements for spent fowl testing, although not in the same way as for egg-type chickens.

Paragraph (l)(1) of § 145.33 and paragraph (g)(1) of § 145.83 require that, to qualify for the classification, a minimum of 30 birds from the flock test negative for antibodies to AI when more than 4 months of age. We are proposing to clarify the requirement for testing by indicating that the testing must be conducted using an approved test described in § 145.14.

Currently, paragraph (h)(2) of § 145.23 and paragraph (f)(2) of § 145.73 require that, during each 90-day testing period, all spent fowl up to a maximum of 30 must be tested and found negative within 21 days prior to movement to slaughter. We are proposing to make two changes to this requirement. First, we would require that the spent fowl be tested serologically for AI, rather than using the agent detection tests listed in paragraph (d)(2) of § 145.14, and we would clarify that the spent fowl would have to be found negative for antibodies to AI. This would make the requirement for testing of spent fowl consistent with the other requirements in the AI Clean programs for primary and multiplier meat-type chickens, which refer to serological testing for antibodies to the virus. Second, we would require the spent fowl to be tested 21 days prior to slaughter, rather than prior to movement to slaughter. This would reduce delays associated with marketing spent fowl while continuing to provide testing to assure the flock's AI Clean status.

New U.S. Salmonella Enteritidis Monitored Classification for Multiplier Meat-Type Breeding Chickens

We are proposing to establish in § 145.33 a new U.S. Salmonella Enteritidis Monitored classification for multiplier meat-type breeding chickens. The classification would be added in a new paragraph (m). This classification would be intended for multiplier meat-type breeders wishing to monitor their breeding flocks for *Salmonella enteritidis* (SE). As SE is both a poultry health and a public health concern, participants would also combine data to help guide decisionmaking on addressing SE and to provide overall data for outside organizations on the prevalence of SE in multiplier meat-type breeding chickens.

A flock and the hatching eggs and chicks produced from it would be eligible for this classification if they meet the following requirements, as determined by the Official State Agency:

- The flock originated from a U.S. S. Enteritidis Clean primary meat-type breeding flock.
- The flock is maintained in accordance with 9 CFR part 147 with respect to Salmonella isolation, sanitation, and management.
- Environmental samples are collected from the flock in accordance with 9 CFR part 147 at 16–18 and 40–45 weeks of age. The samples would have to be examined bacteriologically for group D Salmonella at an authorized laboratory, and cultures from group D positive samples would be serotyped.

The following actions would have to be taken with respect to the test results that are generated from the proposed SE monitoring program:

- If SE is isolated from an environmental sample, a thorough evaluation of the practices and programs associated with the sampled flock would have to be conducted with the goal of ascertaining the reason(s) for the positive finding.
- The test results and the results of any evaluations after SE is isolated from an environmental sample would be reported on a quarterly basis to the Official State Agency and the NPIP Senior Coordinator.
- Participating broiler integrators would have to combine their respective test results (and the results of any associated evaluations) to help guide their decisionmaking regarding programs and practices to implement or maintain to address SE.
- Aggregate data regarding the prevalence of SE in participating U.S. meat-type parent breeding flocks would be made available to the U.S. Poultry and Egg Association and the National Chicken Council. Those bodies could use these data to better inform and guide their discussions on this topic with regulators and consumers.

This classification could be revoked by the Official State Agency if the participant fails to comply with the requirements of this classification. The Official State Agency would not revoke the participant's classification until the participant has been given an opportunity for a hearing in accordance with rules of practice adopted by the Official State Agency.

Changes to U.S. M. Synoviae Clean Classification for Breeding Turkey Flocks

Paragraph (e) of § 145.43 sets out requirements for the U.S. M. Synoviae Clean classification for turkey breeding flocks. Paragraphs (e)(1) and (e)(2) set out testing requirements for participating flocks to demonstrate that they are free of *Mycoplasma synoviae.* Paragraph (e)(3) sets out an alternative path to qualifying for the classification. Under this paragraph, flocks located on premises which, during 3 consecutive years, have contained breeding flocks qualified as U.S. M. Synoviae Clean, as described in paragraph (e)(1) of § 145.43, may qualify for this classification by a negative blood test of at least 100 birds from flocks of more than 100 and each bird in flocks of 100 or less, when more than 12 weeks of age, and by testing a minimum of 30 samples from male flocks and 60 samples from female flocks at 28–30 weeks of age and at 45 weeks of age.

We are proposing to remove this paragraph. *M. synoviae* is difficult to diagnose in breeding turkeys, with few if any clinical signs. For this reason, we believe that samples should be collected from breeding turkeys and testing performed for this bacterium no less than every 4 to 6 weeks, as required in paragraph (e)(1) of this classification. Removing the option to qualify with less frequent testing in paragraph (e)(3) will help to validate the M. Synoviae Clean status of participating turkey breeding flocks.

In addition, we are proposing to add to the end of paragraph (e)(1), which describes the testing requirements for this classification, a sentence indicating that it is recommended that samples be collected from birds with clinical signs of *M. synoviae* infection. Although, as noted earlier, clinical signs of *M. synoviae* infection in turkeys are rare, concentrating testing on any birds that do show clinical signs of infection will help to find any *M. synoviae* present in the flock.

Changes to Spent Fowl Testing in U.S. H5/H7 Avian Influenza Clean Classification for Breeding Turkey Flocks

Paragraph (g) of § 145.43 sets out requirements for the U.S. H5/H7 Avian Influenza Clean classification for turkey breeding flocks. We are proposing to revise its requirement for spent fowl testing. Currently, paragraph (g)(3) of § 145.43 requires all spent fowl from participating flocks, up to a maximum of 30, to be tested and found negative within 21 days prior to movement to slaughter.

Although paragraph (g) requires testing turkey breeding flocks for AI every 90 days, most commercial turkey breeding flocks participating in the classification test much more frequently. Given the high level of overall surveillance, we believe it is not necessary to test 30 birds when spent fowl are moved to slaughter. Testing 6 birds per flock would be consistent with the testing requirements for meat-type commercial turkey flocks moved to slaughter plants participating in the U.S. H5/H7 Avian Influenza Monitored program in § 146.43, and would provide adequate assurance that the flock is free of AI. Accordingly, we are proposing to revise paragraph (g)(3) to require that all spent fowl from participating flocks that are being marketed for meat be tested at a rate of 6 birds per flock within 21 days prior to movement to slaughter. This change would reduce burdens on participating flockowners while continuing to assure that H5/H7 AI is not present in the flock.

Recommendation for Participating Hobbyist and Exhibition Waterfowl, Exhibition Poultry, and Game Bird Breeding Flocks

Section 145.52 discusses requirements for participation in the Plan for hobbyist and exhibition waterfowl, exhibition poultry, and game bird breeding flocks. We are proposing to add to these requirements a recommendation to keep separate waterfowl flocks and gallinaceous flocks (i.e., game birds and other ''land fowl'') that are housed in open-air facilities. Waterfowl are the primary reservoir for AI virus, and they could easily spread the virus to gallinaceous flocks if they are housed in open-air facilities and not kept separate. This would not be a requirement to participate, but a recommendation to address a potential risk associated with keeping the two types of birds in an open-air facility and improve the overall biosecurity of participating facilities that have both waterfowl and gallinaceous flocks.

Changes to U.S. H5/H7 Avian Influenza Clean Classification for Hobbyist and Exhibition Waterfowl, Exhibition Poultry, and Game Bird Breeding Flocks and Products and for Commercial Waterfowl Breeding Flocks and Products

The regulations in § 145.53 set out classifications for hobbyist and exhibition waterfowl, exhibition poultry, and game bird breeding flocks and products. Paragraph (e) in § 145.53 sets out the U.S. H5/H7 Avian Influenza Clean classification for such poultry.

We are proposing to amend this classification to provide for the testing of cloacal swabs for virus isolation in place of birds for primary and multiplier breeding flocks composed of waterfowl. Waterfowl are more prone than other avian species to AI enteric carrier status, and ducks are somewhat immunologically unresponsive to AI exposure. The lack of an immune response in ducks means that antigenic tests that determine whether the AI virus itself is present, rather than an immune response to it, would provide a more accurate determination of a waterfowl breeding flock's AI status. More accurate AI testing would also reduce the necessity of frequent antibody serotyping to determine whether the AI virus detected in the waterfowl is of the H5 or H7 subtypes that are the focus of this classification.

As noted, this subpart includes hobbyist and exhibition poultry. In such poultry, the difference between a primary breeding flock and a multiplier breeding flock can be less clear than in more commercially oriented poultry sectors. While the U.S. H5/H7 Avian Influenza Clean program currently requires primary breeding flocks of hobbyist and exhibition waterfowl, exhibition poultry, and game birds to be tested at 90-day intervals, as opposed to 180 days for multiplier breeding flocks of such poultry, we do not believe it is necessary to make a distinction between the two types of flocks in this poultry sector. Therefore, we are proposing to change the 90-day testing interval for primary breeding flocks to be the same as the 180-day interval for multiplier breeding flocks. This would make the requirements for primary and multiplier breeding flocks identical; we would retain the separate sets of requirements to parallel other NPIP classifications.

In addition, the U.S. H5/H7 Avian Influenza Clean classification for hobbyist and exhibition waterfowl, exhibition poultry, and game bird breeding flocks and products contains a provision for testing spent fowl similar to those discussed earlier in this document. Specifically, paragraph (e)(3) requires that, during each 90-day period, all spent fowl, up to a maximum of 30, must be tested and found negative within 21 days prior to movement to slaughter. The U.S. H5/H7 Avian Influenza Clean classification for commercial breeding waterfowl, in § 145.93(c), contains an identical provision. We are proposing to amend both of these classifications to require a sample of at least 30 birds to be tested prior to movement to slaughter. Testing at this level is appropriate for these types of poultry, which are at higher risk for AI. We are also proposing to amend the spent fowl testing requirements in these classifications to clarify that the spent fowl must test negative to H5/H7 AI.

Finally, in the U.S. H5/H7 Avian Influenza Clean classification for commercial breeding waterfowl, the spent fowl requirement refers to the fowl being tested serologically. We are proposing to remove the word ''serologically'' to give commercial waterfowl producers the option to use the nonserological tests approved in § 145.13(d).

U.S. Salmonella Monitored Classification for Hobbyist and Exhibition Waterfowl, Exhibition Poultry, and Game Bird Breeding Flocks and Products

We are proposing to add a new U.S. Salmonella Monitored classification for hobbyist and exhibition waterfowl, exhibition poultry, and game bird breeding flocks and products. The classification would be added in a new paragraph (f) in § 145.53. This program is intended to be the basis from which the hatching industry may conduct a program for the prevention and control of salmonellosis. It is intended to reduce the incidence of *Salmonella* organisms in day-old poultry through an effective and practical sanitation program in the hatchery. This program would afford other segments of the poultry industry an opportunity to reduce the incidence of *Salmonella* in their products.

Under this classification, an Authorized Agent would collect a minimum of five environmental samples, e.g., chick papers, hatching trays, and chick transfer devices, from the hatchery at least every 30 days. Testing would have to be performed at an authorized laboratory. To claim products are of this classification, all products would have to be derived from a hatchery that meets the requirements of the proposed classification. This classification would be revoked by the Official State Agency if the participant fails to follow recommended corrective measures.

This change would give hobbyist and exhibition waterfowl, exhibition poultry, and game bird breeders an opportunity to participate in a formal *Salmonella* control program.

Changes to U.S. S. Enteritidis Clean Classification for Primary Meat-Type Breeding Chickens

We are proposing several changes to the U.S. S. Enteritidis Clean classification for primary meat-type breeding chickens, which is found in § 145.83(e). These changes are intended to improve the sensitivity of testing and the overall ability to detect SE in primary breeding flocks with additional hatchery samples.

Paragraph (e)(1) of the classification states that a flock and the hatching eggs and chicks produced from it shall be eligible for this classification if the flock originated from a U.S. S. Enteritidis Clean flock or if one of two samples has been examined bacteriologically for *S. enteritidis* at an authorized laboratory and any group D *Salmonella* samples have been serotyped. Paragraph (e)(1)(i)(A) provides the option of testing a sample of a 25-gram sample of meconium from the chicks in the flock, paragraph (e)(1)(i)(B) provides the option of testing a sample of chick papers, and paragraph (e)(1)(i)(C) provides the option of testing a sample of 10 chicks that died within 7 days after hatching.

We are proposing to remove the option of testing meconium, as it does not provide optimal sensitivity to SE. To provide additional sensitivity for the environmental testing, we would expand the option for testing a sample of chick papers to include hatcher tray swabs or fluff. Finally, we are proposing to replace the option of testing a sample of 10 chicks that died within 7 days after hatching with an option to test samples of intestinal and liver or spleen tissues from a minimum of 30 chicks that died within 7 days after hatching and have been preserved daily by freezing prior to shipment to an authorized laboratory. The additional instructions on the type of tissue to be tested and its method of preservation, and the increase in tested samples from 10 to 30, will make the test more sensitive. The proposed options are thus better options for qualifying a primary breeding flock for the U.S. S. Enteritidis Clean classification than those currently in the regulations.

Paragraph (e)(1)(ii) currently contains requirements for feed used in U.S. S. Enteritidis Clean flocks. We are proposing to remove these requirements, as they have become standard industry practice and it is no

longer necessary to include them in the regulations. We would redesignate paragraphs (e)(1)(iii) through (e)(1)(vii) as (e)(1)(ii) through (e)(1)(vi).

Paragraph (e)(1)(iv) currently contains a general requirement to collect and test environmental samples after the flock reaches 4 months of age to maintain the flock's U.S. S. Enteritidis Clean status. We are proposing to add new, more specific requirements for environmental testing after the flock is in egg production and chicks are hatching from it. Environmental samples collected during egg production would have to include at least 4 individual test assay results every 30 days in flocks of more than 500 birds or 2 individual test assay results per month in flocks of 500 birds or fewer. This requirement would ensure that an adequate level of surveillance is conducted. One of these results would have to come from samples collected from hatched chicks at a participating hatchery derived from the flock. This requirement would ensure that the products of the flock are tested for SE on a routine basis and would give a better chance of finding any SE infection. We would indicate that the individual test assays could be derived from pooled samples from the farm or hatchery, but would have to be run as separate test assays in the laboratory, to allow the results to be traced back to the hatchery samples if necessary.

We are not proposing to make any changes to the remaining requirements currently in paragraph (e)(1) of § 145.83, except to reflect moving tests from part 147 to the NPIP Program Standards, as discussed earlier.

Paragraph (e)(3) of § 145.83 sets out followup actions if SE is isolated from an environmental sample. Currently, in such circumstances, 25 randomly selected live birds from the flock and/or 500 cloacal swabs must be bacteriologically examined for SE. If only 1 bird from the 25-bird sample is found positive for SE., the participant may request bacteriological examination of a second 25-bird sample from the flock. If no SE is recovered from any of the specimens in the second sample, the flock will be eligible for the classification and will remain eligible for this classification if the flock is subjected to blood testing each 30 days and no positive samples are found.

We are proposing to change these requirements to make the required testing more sensitive to SE. Instead of testing 25 randomly selected live birds or 500 cloacal swabs, we would require both the bacteriological examination of an additional environmental sampling and 25 live cull birds or fresh dead birds (if present), or 25 other randomly selected live birds if fewer than 25 cull birds can be found in the flock. Requiring the environmental sampling in all cases would increase the chances that this followup testing will find SE if it is present, and the testing of cull birds or fresh dead birds rather than randomly selected birds would concentrate testing on birds most likely to be infected. In addition, if the flock with the SE isolation is in egg production and eggs are under incubation, the regulations would require the next four consecutive hatches to be examined bacteriologically. Samples would be collected from all of the hatching unit's chick trays and basket trays of hatching eggs, or from all chick box papers from the flock, and tested, pooling the samples into a minimum of 10 separate assays. Any followup hatchery-positive SE isolations would result in discontinuation of subsequent hatches until the flock status is determined by bird culture. The flock would be disqualified for the U.S. S. Enteritidis Clean classification if a bird or subsequent flock environmental assay results in isolation of SE. These provisions would provide more certainty regarding the presence of SE in the flock than the current provisions do.

Paragraph (e)(6) of § 145.83 sets out provisions by which a pedigree, experimental, or great-grandparent flock that is removed from the U.S. S. Enteritidis Clean program may be reinstated to the program. We are proposing to make these provisions applicable to grandparent flocks as well, as the corrective measures and testing required in that paragraph would be equally effective at ensuring that a grandparent flock is free of SE as they are for other types of flocks.

These changes would improve the effectiveness of the U.S. S. Enteritidis Clean classification.

New U.S. Salmonella Monitored Classification for Meat-Type Waterfowl Breeding Flocks

Section 145.93 contains various classifications for meat-type waterfowl breeding flocks. (This section applies to commercial meat-type waterfowl breeding flocks, as opposed to the hobbyist and exhibition waterfowl breeding flocks covered by § 145.53.) We are proposing to add a new U.S. Salmonella Monitored classification for meat-type waterfowl breeding flocks and products. The classification would be added in a new paragraph (d) in § 145.93.

The proposed program is intended to be the basis from which the meat-type waterfowl breeding-hatching industry may conduct a program for the prevention and control of salmonellosis. It is intended to reduce the incidence of Salmonella organisms in hatching eggs and day-old waterfowl through an effective and practical sanitation program at the breeder farm and in the hatchery. This would afford other segments of the poultry industry an opportunity to reduce the incidence of Salmonella in their products.

A flock and the hatching eggs and day-old waterfowl produced from it would have to meet the following requirements, as determined by the Official State Agency, to be eligible for this classification:

- The flock would have to be maintained in compliance with isolation, sanitation, and management procedures for Salmonella in accordance with part 147.
- If feed contains animal protein, the protein products would have to have been heated throughout to a minimum temperature of 190 °F or above, or to a minimum temperature of 165 °F for at least 20 minutes, or to a minimum temperature of 184 °F under 70 lbs. pressure during the manufacturing process. These heating requirements would prevent Salmonella from being introduced into the flock via feed.
- Feed would have to be stored and transported in a manner that prevents contamination.
- Waterfowl would have to be hatched in a hatchery whose sanitation is maintained in accordance with part 147 and sanitized or fumigated in accordance with part 147.
- An Authorized Agent would take environmental samples from the hatchery every 30 days, i.e., meconium or box liner paper. An authorized laboratory for Salmonella would examine the samples bacteriologically.
- In addition, an Authorized Agent would take environmental samples in accordance with part 147 from each flock at 4 months of age and every 30 days thereafter, and an authorized laboratory for Salmonella would examine the environmental samples bacteriologically.
- Flocks would be allowed to be vaccinated with a paratyphoid vaccine (which helps to protect birds against Salmonella), provided that a sample of at least 100 birds is segregated and remains unvaccinated until the flock reaches at least 4 months of age. Requiring some birds to be segregated and unvaccinated would ensure that they can be tested for Salmonella without the antibodies from the vaccine causing false-positive results.

The Official State Agency would monitor the effectiveness of the egg

sanitation practices in accordance with part 147. To claim products are of this classification, all products would have to be derived from a hatchery and flock that meet the requirements of the proposed classification. Finally, this classification would be revoked by the Official State Agency if the participant fails to follow recommended corrective measures.

Clarification of Testing Requirements for Participating Slaughter Plants

Part 146 of the regulations contains the NPIP provisions for commercial poultry. Currently, the only disease addressed in this part is H5/H7 LPAI; under part 146, table-egg layer flocks, meat-type chicken slaughter plants, meat-type turkey slaughter plants, and certain types of game birds and waterfowl may participate in U.S. H5/H7 Avian Influenza Monitored classifications.

Under subparts C, D, and E of part 146, slaughter plants for various types of poultry can participate, provided that they meet certain testing requirements. One option available for all types of slaughter plants is to slaughter only birds from flocks where a specified number of birds have been tested and found negative for H5/H7 AI no more than 21 days prior to slaughter.

Section 146.11 sets out the audit process for participating slaughter plants. Paragraph (b) states that flocks slaughtered at a slaughter plant will be considered to be not conforming to the required protocol of the classifications if there are no test results available, if the flock was not tested within 21 days before slaughter, or if the test results for the flocks were not returned before slaughter.

We are proposing to amend paragraph (b) to refer to samples being collected and tested and to results being returned prior to movement to slaughter. These changes would clarify the requirements and make the regulations in § 146.11(b) consistent with the relevant U.S. H5/H7 Avian Influenza Monitored classifications. In addition, it is important to have the test results for a flock returned prior to movement to slaughter to prevent the flock from being exposed to other, healthy birds and possibly requiring cleaning and disinfection at the slaughter plant.

Clarifying Testing Requirements for Commercial Table-Egg Layer Pullet Flocks and Table-Egg Layer Flocks

The regulations in § 146.23(a) provide the U.S. H5/H7 Avian Influenza Monitored classification for table-egg layer pullet flocks and table-egg layer flocks. Separate testing requirements are set out for each type of flock in paragraphs (a)(1) and (a)(2), respectively. The introductory text for paragraph (a) addresses the table-egg layer industry generally, including both table-egg layer pullet flocks and table-egg layer flocks. This has caused some confusion. To make it clear that each type of flock needs to participate and maintain its classification separately, we are proposing to reformat paragraph (a) so that it includes introductory text in paragraphs (a)(1) and (a)(2) that is specific to each type of flock. The testing requirements would remain the same.

Providing for Spent Fowl To Participate in H5/H7 LPAI Control Program for Commercial Meat-Type Chickens

The regulations in part 146 do not provide explicitly for the participation of spent fowl. Spent fowl are domesticated poultry, typically chickens, that were in production of hatching eggs or commercial table eggs and have been removed from such production. Although they were not raised for the primary purpose of meat production, such fowl no longer have value as layers and thus are slaughtered for meat at meat-type chicken slaughter plants.

However, the special provisions for the participation of meat-type chicken slaughter plants in subpart C of part 146 (§§ 146.31 through 146.33) define *meat-type chicken* as a domesticated chicken grown for the primary purpose of producing meat, including but not limited to broilers, roasters, fryers, and cornish, meaning spent fowl are not specifically authorized to participate under those provisions. Accordingly, we are proposing to amend subpart C to provide for the participation of spent fowl in the meat-type chicken slaughter plant provisions.

We are proposing to define *spent fowl* in § 146.31 with the definition given above. We would add a new paragraph (c) to § 146.32, which discusses participation in the special provisions for meat-type chicken slaughter plants, indicating that spent fowl slaughtered at meat-type chicken slaughter plants that participate in the NPIP may participate in the NPIP under the provisions of subpart C.

We are also proposing to amend the U.S. H5/H7 Avian Influenza Monitored classification in § 146.33. This classification provides three options for participation in the program. Two of those options refer generically to birds tested at the slaughter plants or otherwise under surveillance testing and thus could apply both to meat-type chickens and spent fowl without modification. The third requires meat-type chicken slaughter plants to accept only meat-type chickens from flocks where surveillance is performed for H5/H7 AI. We would amend this option to indicate that meat-type chicken slaughter plants could also accept spent fowl from flocks where surveillance was being performed for H5/H7 AI. The surveillance requirements for meat-type chickens and spent fowl would be the same, as they are based on statistical principles for disease detection.

These changes would necessitate two minor changes elsewhere in part 146. To accommodate spent fowl flocks that may wish to participate in a State other than the State in which they are located, we would amend the definition of *commercial meat-type flock* in § 146.1 to include spent fowl, so that provisions allowing commercial meat-type flocks to participate with another Official State Agency in § 146.2(c) would apply to spent fowl as well. In § 146.3, we would amend the requirement in paragraph (c) that a participating slaughter plant participate with all the poultry processed at that facility to include spent fowl.

These changes would allow spent fowl flocks to participate in the U.S. H5/H7 Avian Influenza Monitored program, thus providing for additional surveillance for H5/H7 LPAI in the poultry industry overall.

Changes to the U.S. H5/H7 Avian Influenza Monitored Classifications for Commercial Meat-Type Chickens and Turkey Slaughter Plants

Besides the changes related to including spent fowl in the classification, we are proposing to clarify some wording in the U.S. H5/H7 Avian Influenza Monitored classification for commercial meat-type chicken slaughter plants. Paragraph (a)(2) of § 146.33 provides participating slaughter plants the option to qualify for the classification if they accept only meat-type chickens from flocks where a minimum of 11 birds have been tested negative for antibodies to the H5/H7 subtypes of avian influenza, as provided in § 146.13(b), no more than 21 days prior to slaughter. This wording has confused some participants in the program regarding when samples should be collected. We are proposing to change it to read ''where samples from a minimum of 11 birds have been collected no more than 21 days prior to slaughter and tested negative to the H5/H7 subtypes of avian influenza.'' We believe this wording will better convey that it is the testing that has to occur no more than 21 days prior to slaughter; the results can come later, as long as they

are available prior to slaughter, consistent with our proposed changes to § 146.11.

Both paragraphs (a)(1) and (a)(2) of this classification refer to testing for antibodies to H5/H7 AI; we are proposing to remove the words ''for antibodies'' to allow for the use of the agent detection tests approved in § 146.13(b).

Paragraph (a) of § 146.43 contains the U.S. H5/H7 Avian Influenza Monitored classification for commercial turkey slaughter plants. Paragraph (a)(1) allows meat-type turkey slaughter plants to participate in the classification if they accept only meat-type turkeys from flocks where a minimum of 6 birds per flock has tested negative for antibodies to type A avian influenza, as provided in § 146.13(b), with an approved test no more than 21 days prior to slaughter. The regulations indicate that positive samples shall be further tested by an authorized laboratory using the hemagglutination inhibition test to detect antibodies to the hemagglutinin subtypes H5 and H7. They also recommend that samples be collected from flocks over 10 weeks of age with respiratory signs such as coughing, sneezing, snicking, sinusitis, or rales; depression; or decreases in food or water intake, to maximize the chances of finding AI should it be present.

We are proposing to revise the testing requirement to read ''where a minimum of 6 samples per flock have been collected no more than 21 days prior to movement to slaughter and tested negative.'' This revised language would help to clarify what is involved in testing. We would require the testing to take place prior to movement to slaughter, rather than prior to slaughter, as an additional precaution. We would also remove the current reference to testing for antibodies.

Finally, we would remove the sentence describing how positive samples would be handled. It is not necessary to specify this in the regulations, as this process is handled by APHIS internally, and we may wish to change the process in the future.

Other Changes to 9 CFR Part 147

As discussed earlier, we are retaining subpart E and revising F of part 147. We are proposing minor changes to those subparts. Subpart E refers to the NPIP Technical Committee, which is defined in § 145.1 but not in part 147. We would add to § 147.41 a definition of *NPIP Technical Committee* that would be identical to the definition in § 145.1. That definition reads: ''A committee made up of technical experts on poultry health, biosecurity, surveillance, and diagnostics. The committee consists of representatives from the poultry and egg industries, universities, and State and Federal governments and is appointed by the Senior Coordinator and approved by the General Conference Committee.''

Besides the proposed changes to the requirements for authorized laboratories discussed earlier, including moving those requirements from § 147.51 to § 147.52, we are proposing some additional amendments. Paragraph (a) of current § 147.51 requires an authorized laboratory to use a regularly scheduled check test for all the tests it performs. We would add text indicating that the NPIP will serve as the lead agency for the coordination of available check tests from the NVSL, which among its other duties provides check tests for authorized laboratories.

Paragraph (b) of current § 147.51 indicates that testing procedures at an authorized laboratory must be run or overseen by a laboratory technician who has attended and satisfactorily completed Service-approved laboratory workshops for Plan-specific diseases within the past 3 years. Cuts to both State and Federal budgets have made it more difficult to provide and attend workshops in recent years. Given these constraints, we are proposing to increase the interval at which the workshops must be given to 4 years. We do not believe this would adversely affect laboratory technician performance given the other requirements for authorized laboratories, which include site visits from the Official State Agency and the Service and reporting requirements; increasing the interval would ease a burden on State and Federal participants.

Paragraph (c) of current § 147.51 indicates that official Plan assays must be performed and reported as described in part 147. Besides amending this paragraph to refer to the NPIP Program Standards or other procedures approved by the Administrator, we would also add that assays must be performed using control reagents approved by the Plan or the reagent manufacturer. This would ensure that control assays are accurate and effective.

Paragraph (d) of current § 147.51 states that the Official State Agency will conduct a site visit and recordkeeping audit annually, but does not describe what the site visit and audit will entail. We would add text indicating that these would include, but may not be limited to, review of technician training records, check test proficiency, and test results. The information from the site visit and recordkeeping audit would also be made available to the NPIP upon request.

We are also proposing to update references to § 147.51 in the definition of *authorized laboratory* in parts 145 and 146, and in the definition of *Senior Coordinator* in part 145, to refer to § 147.52.

Miscellaneous Corrections

The regulations in paragraph (c) of § 145.5 require a flock to participate in the U.S. Pullorum-Typhoid Clean classification in order to participate in the Plan. The list of subparts in 9 CFR part 145 that contain such a classification is out of date. We are proposing to update it to include subparts G, H, and I.

Section 145.10 shows illustrative designs corresponding to various classifications. For some of the classifications, the references to classifications are out of date; for example, the U.S. Pullorum-Typhoid Clean classification whose illustrative design is included in paragraph (a) of § 145.10 now includes classifications in §§ 145.73(b), 145.83(b), and 145.93(b). We are proposing to update that paragraph and other paragraphs in § 145.10 to include all of the classifications in the regulations that correspond to the specified illustrative designs.

In §§ 145.23 and 145.33, paragraph (b) sets out the U.S. Pullorum-Typhoid Clean classification for multiplier breeding egg-type chickens and meat-type chickens, respectively. The introductory text refers to meeting one of the criteria in paragraphs (b)(1) through (b)(5) to qualify for the classification, but these paragraphs only contain subparagraphs (b)(1) through (b)(4). We are proposing to correct the reference accordingly.

In § 145.33, paragraphs (j) and (k) set out requirements for the U.S. M. Gallisepticum Monitored and U.S. M. Synoviae Monitored classifications, respectively, for multiplier breeding meat-type chickens. These classifications prohibit setting eggs from these classifications in hatchers or incubators in which U.S. M. Gallisepticum Clean or U.S. M. Synoviae Clean primary breeding flocks are set. However, the paragraph references for these primary breeding flock classifications are out of date, as the provisions for primary breeding flocks were moved from § 145.33 to § 145.83. We would correct the citations.

In § 146.3, which discusses participation in the Plan for commercial poultry, paragraph (e) states that commercial table-egg layers will cease to participate in the Plan after September 26, 2008, unless the majority

of the commercial table-egg layer delegates vote to continue participation. As the table-egg layer delegates have voted to continue participation, it is not necessary to retain this provision in the regulations, and we are proposing to remove paragraph (e).

Section 147.44 sets out the process for submitting, compiling, and distributing proposed changes to the NPIP. Paragraph (b) of that section indicates that proposed changes shall be submitted in writing so as to reach the Service not later than 150 days prior to the opening date of the Plan Conference, except as provided in paragraph (d)(2) of § 147.43. However, paragraph (d)(2) of § 147.43 does not discuss submission of proposals for changes to the Plan; paragraph (d)(4) does. We would correct the reference in § 147.44(b) accordingly.

Executive Order 12866 and Regulatory Flexibility Act

This proposed rule has been determined to be not significant for the purposes of Executive Order 12866 and, therefore, has not been reviewed by the Office of Management and Budget.

In accordance with the Regulatory Flexibility Act, we have analyzed the potential economic effects of this action on small entities. The analysis is summarized below. Copies of the full analysis are available by contacting the person listed under **FOR FURTHER INFORMATION CONTACT** or on the Regulations.gov Web site (see **ADDRESSES** above for instructions for accessing Regulations.gov).

The changes in this proposed rule are recommended by the NPIP GCC, which represents cooperating State agencies and poultry industry members and advises the Secretary of Agriculture on issues pertaining to poultry health. The proposed amendments to these regulations would improve the regulatory environment for poultry and poultry products.

This proposed rule would move approved tests and testing procedures from the Code of Federal Regulations to a program standards document; add compartmentalization standards to the NPIP regulations; and make a number of specific changes, including adding or amending definitions of technical terms to specific sections, amending poultry disease classifications and laboratory procedures, and adding specific tests for certain poultry diseases.

The establishments that would be affected by the proposed rule—principally entities engaged in poultry production and processing—are predominantly small by Small Business Administration standards. In those instances in which an addition or modification could potentially result in a cost to certain entities, we do not expect the costs to be significant. This rule embodies changes decided upon by the NPIP GCC on behalf of Plan members, that is, changes recognized by the poultry industry as in their interest. We note that NPIP membership is voluntary.

Under these circumstances, the Administrator of the Animal and Plant Health Inspection Service has determined that this action would not have a significant economic impact on a substantial number of small entities.

Executive Order 12372

This program/activity is listed in the Catalog of Federal Domestic Assistance under No. 10.025 and is subject to Executive Order 12372, which requires intergovernmental consultation with State and local officials. (See 7 CFR part 3015, subpart V.)

Paperwork Reduction Act

This proposed rule contains no new information collection or recordkeeping requirements under the Paperwork Reduction Act of 1995 (44 U.S.C. 3501 *et seq.*).

List of Subjects

9 CFR Part 56

Animal diseases, Indemnity payments, Low pathogenic avian influenza, Poultry.

9 CFR Parts 145, 146, and 147

Animal diseases, Poultry and poultry products, Reporting and recordkeeping requirements.

Accordingly, we propose to amend 9 CFR parts 56, 145, 146, and 147 as follows:

PART 56—CONTROL OF H5/H7 LOW PATHOGENIC AVIAN INFLUENZA

■ 1. The authority citation for part 56 continues to read as follows:

Authority: 7 U.S.C. 8301–8317; 7 CFR 2.22, 2.80, and 371.4.

■ 2. Section 56.1 is amended as follows:
■ a. By revising the definition of *H5/H7 low pathogenic avian influenza (LPAI).*
■ b. In the definition of *H5/H7 LPAI virus infection (infected),* by adding the words ''the Cooperating State Agency, the Official State Agency, and'' before the word ''APHIS''.

The revision reads as follows:

§ 56.1 Definitions.

* * * * *

H5/H7 low pathogenic avian influenza (LPAI). An infection of poultry caused by an influenza A virus of H5 or H7 subtype that has an intravenous pathogenicity index in 6-week-old chickens less than or equal to 1.2 or causes less than 75 percent mortality in 4- to 8-week-old chickens infected intravenously, or an infection with influenza A viruses of H5 or H7 subtype with a cleavage site that is not consistent with a previously identified highly pathogenic avian influenza virus.

* * * * *

■ 3. Section 56.4 is amended by adding a new paragraph (d) to read as follows:

§ 56.4 Determination of indemnity amounts.

* * * * *

(d) *Requirements for compliance agreements.* The compliance agreement is a comprehensive document that describes the depopulation, disposal, and cleaning and disinfection plans for poultry that were infected with or exposed to H5/H7 LPAI, or a premises that contained such poultry. The compliance agreement sets out APHIS responsibilities, owner responsibilities, and Cooperating State Agency responsibilities. The compliance agreement must include the owner's name and the name and address of the affected premises. The compliance agreement must have signatories that include, but are not necessarily limited to, the owner, the grower (if applicable), the Cooperating State Agency representative, the State veterinarian, and the APHIS area supervisor. In addition, the compliance agreement must contain a flock plan with estimated cost breakdowns that include labor, materials, personal protective equipment, travel expenses for personnel involved, and any additional information deemed necessary by the Service. The final compliance agreement must be submitted to the Service no later than 30 days after the affected premises is released from quarantine for H5 or H7 LPAI.

* * * * *

■ 4. Section 56.5 is amended as follows:
■ a. By revising paragraph (c)(1)(i).
■ b. By adding new paragraphs (c)(1)(iii) and (c)(1)(iv).
■ c. By revising paragraphs (d)(1)(i) and (d)(1)(iii).
■ d. By removing paragraph (d)(1)(iv).
■ e. By revising the second, third, and fourth sentences after the heading of paragraph (d)(2)(i) and the first sentence after the heading of paragraph (d)(3).

The revisions and additions read as follows:

§ 56.5 Destruction and disposal of poultry and cleaning and disinfection of premises, conveyances, and materials.

* * * * *

(c) * * *

(1) * * *

(i) Poultry infected with or exposed to H5/H7 LPAI must not be transported to a market for controlled marketing until approved by the Cooperating State Agency in accordance with the initial State response and containment plan described in § 56.10.

* * * * *

(iii) Routes to slaughter must avoid other commercial poultry operations whenever possible. All load-out equipment, trailers, and trucks used on premises that have housed poultry that were infected with or exposed to H5/H7 LPAI must be cleaned and disinfected and not enter other poultry premises or facilities for 48 hours after removing such poultry from their premises.

(iv) Flocks moved for controlled marketing must be the last poultry marketed during the week they are marketed.

* * * * *

(d) * * *

(1) * * *

(i) Secure all feathers and debris that might blow around outside the house in which the infected or exposed poultry were held by gathering and pushing the material into the house;

* * * * *

(iii) Close the house in which the poultry were held, maintaining just enough ventilation to remove moisture. Leave the house undisturbed for a minimum of 72 hours.

(2) * * *

(i) * * * Compost manure, debris, and feed by windrowing in the house if possible. If this is not possible, set up a system for hauling manure, debris, and feed to an approved site for burial, piling, or composting. Manure, debris and feed may be removed from the house or premises and disposed of by composting it on site, leaving it in a undisturbed pile on site, or removing it from the site in covered vehicles. Land application of manure, debris, and feed should only be performed in accordance with the initial State response and containment plan described in § 56.10. Clean out the house or move or spread litter as determined by the Cooperating State Agency and in accordance with the initial State response and containment plan. * * *

* * * * *

(3) * * * Premises should remain empty until testing provides negative virus detection results and checked by the Cooperating State Agency in accordance with the initial State response and containment plan described in § 56.10. * * *

* * * * *

PART 145—NATIONAL POULTRY IMPROVEMENT PLAN FOR BREEDING POULTRY

■ 5. The authority citation for part 145 continues to read as follows:

Authority: 7 U.S.C. 8301–8317; 7 CFR 2.22, 2.80, and 371.4.

■ 6. Section 145.1 is amended as follows:

■ a. In the definition of *authorized agent,* by removing the words ''as described in §§ 147.1(a) and 147.12'' and adding the words ''in accordance with part 147'' in their place.

■ b. In the definition of *authorized laboratory,* by removing the citation ''§ 147.51'' and adding the citation ''§ 147.52'' in its place; and by removing the words ''the assays described in'' and adding the words ''assays in accordance with'' in their place.

■ c. In the definition of *authorized testing agent,* by removing the words ''as described in §§ 147.1(a) and 147.12'' and adding the words ''in accordance with part 147'' in their place.

■ d. By adding, in alphabetical order, definitions of *H5/H7 low pathogenic avian influenza (LPAI)* and *NPIP Program Standards.*

■ e. In the definition of *reactor,* by removing the words ''parts 145 or 147 of this chapter'' and adding the words ''this part or in accordance with part 147 of this subchapter'' in their place.

■ f. In the definition of *Senior Coordinator,* in paragraph (4), by removing the citation ''§ 147.51'' and adding the citation ''§ 147.52'' in its place.

The additions read as follows:

§ 145.1 Definitions.

* * * * *

H5/H7 low pathogenic avian influenza (LPAI). An infection of poultry caused by an influenza A virus of H5 or H7 subtype that has an intravenous pathogenicity index in 6-week-old chickens less than or equal to 1.2 or causes less than 75 percent mortality in 4- to 8-week-old chickens infected intravenously, or an infection with influenza A viruses of H5 or H7 subtype with a cleavage site that is not consistent with a previously identified highly pathogenic avian influenza virus.

* * * * *

NPIP Program Standards. A document that contains tests and sanitation procedures approved by the Administrator in accordance with § 147.53 of this subchapter for use under this subchapter. This document may be obtained from the NPIP Web site at *http://www.aphis.usda.gov/animal_health/animal_dis_spec/poultry/* or by writing to the Service at National Poultry Improvement Plan, APHIS, USDA, 1506 Klondike Road, Suite 101, Conyers, GA 30094.

* * * * *

§ 145.2 [Amended]

■ 7. In § 145.2, paragraph (e) is amended by removing the words ''follow the laboratory protocols outlined in part 147 of this chapter'' and adding the words ''conduct tests in accordance with part 147 of this subchapter'' in their place.

■ 8. Section 145.3 is amended as follows:

■ a. In paragraph (c), by removing the word ''He'' and adding the words ''The participant'' in its place; and by adding the word ''and'' before the word ''cassowaries,''.

■ b. By redesignating paragraphs (d) and (e) as paragraphs (e) and (f), respectively.

■ c. By adding a new paragraph (d).

The addition reads as follows:

§ 145.3 Participation.

* * * * *

(d) To ensure that Plan diseases are not spread, flocks should be qualified for their intended Plan classifications before being moved into breeder production facilities.

* * * * *

§ 145.5 [Amended]

■ 9. Section 145.5 is amended as follows:

■ a. In paragraph (a), by removing the words ''as recommended in §§ 147.21 and 147.22 (a) and (e) of this chapter'' and adding the words ''in accordance with part 147 of this subchapter'' in their place.

■ b. In paragraph (c), by removing the words ''or F'' and adding the words ''F, G, H, or I'' in their place.

■ 10. Section 145.6 is amended as follows:

■ a. By revising the second sentence in paragraph (a) introductory text.

■ b. In paragraphs (a)(1), (a)(2), (a)(3), and (a)(4), by removing the words ''as outlined in § 147.24 of this chapter'' and adding the words ''in accordance with part 147 of this subchapter'' in their place.

The revision reads as follows:

§ 145.6 Specific provisions for participating hatcheries.

(a) * * * The sanitary procedures outlined in the NPIP Program Standards, or other procedures approved by the Administrator in accordance with § 147.53(d), will be considered as a guide in determining compliance with this provision. * * *

* * * * *

■ 11. Section 145.10 is amended as follows:

■ a. In paragraph (b) introductory text, by removing the words ''and 145.63(a)'' and adding the words ''145.63(a), 145.73(b), 145.83(b), and 145.93(b)'' in their place.
■ b. By revising paragraph (c) introductory text, paragraph (g) introductory text, paragraph (m) introductory text, paragraph (o) introductory text, and paragraph (t) introductory text.

The revisions read as follows:

§ 145.10 Terminology and classification; flocks, products, and States.

* * * * *

(c) *U.S. M. Gallisepticum Clean.* (See §§ 145.23(c), 145.23(f), 145.33(c), 145.33(f), 145.43(c), 145.53(c), 145.73(c), and 145.83(c).)

* * * * *

(g) *U.S. Pullorum-Typhoid Clean State.* (See §§ 145.24(a), 145.34(a), 145.44(a), 145.54(a), and 145.94(a).)

* * * * *

(m) *U.S. S. Enteritidis Clean.* (See §§ 145.23(d), 145.73(d), and 145.83(e).)

* * * * *

(o) *U.S. Salmonella Monitored.* (See §§ 145.53(f), 145.83(f), and 145.93(d).)

* * * * *

(t) *U.S. H5/H7 Avian Influenza Clean.* (See §§ 145.43(g), 145.53(e), and 145.93(c).)

* * * * *

■ 12. Section 145.14 is amended as follows:
■ a. In paragraph (a)(1), by revising the second sentence.
■ b. In paragraph (a)(6)(ii), by revising the second sentence.
■ c. In paragraph (b)(1), by adding a sentence after the second sentence.
■ d. By revising paragraph (b)(3).
■ e. By revising paragraph (d)(1)(ii)(C).
■ f. In paragraph (d)(2)(i), by removing the word ''(AVPR01510)''.
■ g. By revising paragraph (d)(2)(ii)(B).

The revisions read as follows:

§ 145.14 Testing.

(a) * * *

(1) * * * Official blood tests must be conducted in accordance with part 147 of this subchapter or according to literature provided by the producer. * * *

* * * * *

(6) * * *

(ii) * * * Bacteriological examination must be conducted in accordance with part 147 of this subchapter. * * *

* * * * *

(b) * * *

(1) * * * Tests must be conducted in accordance with this paragraph (b) and in accordance with part 147 of this subchapter. * * *

* * * * *

(3) When reactors to the test for which the flock was tested are submitted to a laboratory as prescribed by the Official State Agency, the final status of the flock will be determined in accordance with part 147 of this subchapter.

* * * * *

(d) * * *

(1) * * *

(ii) * * *

(C) The AGID test for avian influenza must be conducted in accordance with part 147 of this subchapter. The test can be conducted on egg yolk or blood samples. The AGID test is not recommended for use in waterfowl.

* * * * *

(2) * * *

(ii) * * *

(B) Chicken and turkey flocks that test positive on the ACIA must be retested using the RRT–PCR or virus isolation. Positive results from the RRT–PCR or virus isolation must be further tested by Federal Reference Laboratories using appropriate tests for confirmation. Final judgment may be based upon further sampling and appropriate tests for confirmation.

* * * * *

■ 13. In § 145.22, paragraph (b) is revised to read as follows:

§ 145.22 Participation.

* * * * *

(b) Hatching eggs produced by multiplier breeding flocks should be nest clean. They may be fumigated in accordance with part 147 of this subchapter or otherwise sanitized.

* * * * *

■ 14. Section 145.23 is amended as follows:
■ a. In paragraph (b) introductory text, by removing the citation ''(5)'' and adding the citation ''(b)(4)'' in its place.
■ b. In paragraph (c)(1) introductory text, by removing the words ''in compliance with the provisions of § 147.26 of this chapter'' and adding the words ''in accordance with part 147 of this subchapter with respect to Mycoplasma isolation, sanitation, and management'' in their place.
■ c. In paragraph (c)(1)(ii)(C), by removing the words ''§ 147.8 of this chapter'' and adding the words ''part 147 of this subchapter'' in their place.
■ d. In paragraph (c)(3), by removing the words ''as described in § 147.24(a) of this chapter'' and adding the words ''in accordance with part 147 of this subchapter'' in their place.
■ e. In paragraph (d)(1)(iv), by removing the words ''in compliance with §§ 147.21, 147.24(a), and 147.26 of this chapter'' and adding the words ''in accordance with part 147 of this subchapter with respect to flock sanitation, cleaning and disinfection, and Salmonella isolation, sanitation, and management'' in their place.
■ f. In paragraph (d)(1)(v), by removing the words ''as described in § 147.12 of this chapter'' and adding the words ''in accordance with part 147 of this subchapter'' in their place.
■ g. In paragraphs (d)(1)(vii), by removing the words ''as described in § 147.11 of this chapter'' and adding the words ''in accordance with part 147 of this subchapter'' in their place.
■ h. By revising paragraphs (d)(1)(viii) and (d)(1)(ix).
■ i. In paragraph (d)(2), by removing the words ''as described in § 147.11(a) of this chapter'' and adding the words ''in accordance with part 147 of this subchapter'' in their place.
■ j. In paragraph (e)(1) introductory text, by removing the words ''in compliance with the provisions of § 147.26 of this chapter'' and adding the words ''in accordance with part 147 of this subchapter with respect to Mycoplasma isolation, sanitation, and management'' in their place.
■ k. In paragraph (e)(1)(ii)(B), by removing the words ''§ 147.8 of this chapter'' and adding the words ''part 147 of this subchapter'' in their place.
■ l. In paragraph (e)(3), by removing the words ''as described in § 147.24(a) of this chapter'' and adding the words ''in accordance with part 147 of this subchapter'' in their place.
■ m. In paragraph (f)(3), by removing the words ''in compliance with the provisions of § 147.26 of this chapter'' and adding the words ''in accordance with part 147 of this subchapter with respect to Mycoplasma isolation, sanitation, and management'' in their place.
■ n. In paragraph (f)(5), by removing the words ''as described in § 147.24(a) of this chapter'' and adding the words ''in accordance with part 147 of this subchapter'' in their place.
■ o. In paragraph (g)(3), by removing the words ''in compliance with the provisions of § 147.26 of this chapter'' and adding the words ''in accordance with part 147 of this subchapter with respect to Mycoplasma isolation, sanitation, and management'' in their place.
■ p. In paragraph (g)(5), by removing the words ''as described in § 147.24(a) of this chapter'' and adding the words ''in accordance with part 147 of this subchapter'' in their place.
■ q. In paragraph (h)(1) introductory text, by adding the words ''and found'' before the word ''negative'' and by removing the words ''for antibodies''.
■ r. By revising paragraph (h)(2).

The revisions read as follows:

§ 145.23 Terminology and classification; flocks and products.

* * * * *

(d) * * *

(1) * * *

(viii) Hatching eggs are collected as quickly as possible, and their sanitation is maintained in accordance with part 147 of this subchapter.

(ix) Hatching eggs produced by the flock are incubated in a hatchery whose sanitation is maintained in accordance with part 147 of this subchapter and sanitized either by a procedure approved by the Official State Agency or in accordance with part 147 of this subchapter.

* * * * *

(h) * * *

(2) A sample of at least 11 birds must be tested and found negative to avian influenza within 21 days prior to slaughter.

* * * * *

■ 15. In § 145.32, paragraph (b) is revised to read as follows:

§ 145.32 Participation.

* * * * *

(b) Hatching eggs produced by multiplier breeding flocks should be nest clean. They may be fumigated in accordance with part 147 of this subchapter or otherwise sanitized.

* * * * *

■ 16. Section 145.33 is amended as follows:

■ a. In paragraph (b) introductory text, by removing the citation ''(5)'' and adding the citation ''(b)(4)'' in its place.

■ b. In paragraph (c)(1) introductory text, by removing the words ''in compliance with the provisions of § 147.26 of this chapter'' and adding the words ''in accordance with part 147 of this subchapter with respect to Mycoplasma isolation, sanitation, and management'' in their place.

■ c. In paragraph (c)(1)(ii)(C), by removing the words ''§ 147.8 of this chapter'' and adding the words ''part 147 of this subchapter'' in their place.

■ d. In paragraph (c)(2), by removing the words ''(see §§ 147.22, 147.23, and 147.24)'' and by adding the words ''and in accordance with part 147 of this subchapter'' before the period at the end of the paragraph.

■ e. In paragraph (c)(3), by removing the words ''as described in § 147.24(a) of this chapter'' and adding the words ''in accordance with part 147 of this subchapter'' in their place.

■ f. In paragraph (c)(4), by removing the words ''approved by the Department'' and adding the words ''in accordance with part 147 of this subchapter'' in their place.

■ g. In paragraph (d)(1)(ii), by removing the words ''in compliance with §§ 147.21, 147.24(a), and 147.26 of this chapter'' and adding the words ''in accordance with part 147 of this subchapter with respect to flock sanitation, cleaning and disinfection, and Salmonella isolation, sanitation, and management'' in their place.

■ h. By revising paragraph (d)(1)(vi).

■ i. In paragraph (d)(1)(vii), by removing the words ''as described in § 147.12 of this chapter'' and adding the words ''in accordance with part 147 of this subchapter'' in their place.

■ j. By revising paragraph (d)(2).

■ k. In paragraph (e)(1) introductory text, by removing the words ''in compliance with the provisions of § 147.26 of this chapter'' and adding the words ''in accordance with part 147 of this subchapter with respect to Mycoplasma isolation, sanitation, and management'' in their place.

■ l. In paragraph (e)(1)(ii)(B), by removing the words ''§ 147.8 of this chapter'' and adding the words ''part 147 of this subchapter'' in their place.

■ m. In paragraph (e)(3), by removing the words ''as described in § 147.24(a) of this chapter'' and adding the words ''in accordance with part 147 of this subchapter'' in their place.

■ n. In paragraph (e)(4), by removing the words ''approved by the Department'' and adding the words ''in accordance with part 147 of this subchapter'' in their place.

■ o. In paragraph (f)(3), by removing the words ''in compliance with the provisions of § 147.26 of this chapter'' and adding the words ''in accordance with part 147 of this subchapter with respect to Mycoplasma isolation, sanitation, and management'' in their place.

■ p. In paragraph (f)(5), by removing the words ''as described in § 147.24(a) of this chapter'' and adding the words ''in accordance with part 147 of this subchapter'' in their place.

■ q. In paragraph (g)(3), by removing the words ''in compliance with the provisions of § 147.26 of this chapter'' and adding the words ''in accordance with part 147 of this subchapter with respect to Mycoplasma isolation, sanitation, and management'' in their place.

■ r. In paragraph (g)(5), by removing the words ''as described in § 147.24(a) of this chapter'' and adding the words ''in accordance with part 147 of this subchapter'' in their place.

■ s. In paragraph (j)(2), by removing the words ''paragraph (c)(1)(i) of this section'' and adding the words ''§ 145.83(c)(1)(i)'' in their place.

■ t. In paragraphs (j)(3) and (k)(3), by removing the words ''as described in § 147.24(a) of this chapter'' and adding the words ''in accordance with part 147 of this subchapter'' in their place.

■ u. In paragraph (k)(2), by removing the words ''paragraph (e)(1)(i) of this section'' and adding the words ''§ 145.83(d)(1)(i)'' in their place.

■ v. In paragraph (l)(1) introductory text, by adding the words ''using an approved test as described in § 145.14'' after the word ''influenza''.

■ w. By revising paragraph (l)(2).

■ x. By adding a new paragraph (m).

The revisions read as follows:

§ 145.33 Terminology and classification; flocks and products.

* * * * *

(d) * * *

(1) * * *

(vi) Chicks shall be hatched in a hatchery whose sanitation is maintained in accordance with part 147 of this subchapter and sanitized or fumigated in accordance with part 147 of this subchapter;

* * * * *

(2) The Official State Agency may monitor the effectiveness of the sanitation practices in accordance with part 147 of this subchapter.

* * * * *

(l) * * *

(2) During each 90-day period, all primary spent fowl, up to a maximum of 30, must be tested serologically and found negative for antibodies to avian influenza within 21 days prior to slaughter.

(m) *U.S. Salmonella Enteritidis Monitored.* This classification is intended for multiplier meat-type breeders wishing to monitor their breeding flocks for *Salmonella enteritidis.*

(1) A flock and the hatching eggs and chicks produced from it shall be eligible for this classification if they meet the following requirements, as determined by the Official State Agency:

(i) The flock originated from a U.S. S. Enteritidis Clean primary meat-type breeding flock.

(ii) The flock is maintained in accordance with part 147 of this subchapter with respect to Salmonella isolation, sanitation, and management.

(iii) Environmental samples are collected from the flock in accordance with part 147 of this subchapter at 16–18 and 40–45 weeks of age. The samples shall be examined bacteriologically for group D Salmonella at an authorized laboratory, and cultures from group D positive samples shall be serotyped.

(2) The following actions must be taken with respect to the test results that are generated from this *S. enteritidis* monitoring program:

(i) If *S. enteritidis* is isolated from an environmental sample collected from the flock in accordance with paragraph (m)(1)(iii) of this section, a thorough evaluation of the practices and programs associated with the sampled flock shall be conducted with the goal of ascertaining the reason(s) for the positive finding.

(ii) The test results and the results of any evaluations performed in accordance with paragraph (m)(2)(i) of this section will be reported on a quarterly basis to the Official State Agency and the NPIP Senior Coordinator.

(iii) Participating broiler integrators shall combine their respective test results (and the results of any associated evaluations) to help guide their decisionmaking regarding programs and practices to implement or maintain to address *S. enteritidis.*

(iv) Aggregate data regarding the prevalence of *S. enteritidis* in participating U.S. meat-type parent breeding flocks shall be made available to the U.S. Poultry and Egg Association and the National Chicken Council.

(3) This classification may be revoked by the Official State Agency if the participant fails to comply with the requirements of this classification. The Official State Agency shall not revoke the participant's classification until the participant has been given an opportunity for a hearing in accordance with rules of practice adopted by the Official State Agency.

* * * * *

§ 145.42 [Amended]

■ 17. In § 145.42, paragraph (b) is amended by removing the words ''(see § 147.25 of this chapter)'' and adding the words ''in accordance with part 147 of this subchapter'' in their place.

■ 18. Section 145.43 is amended as follows:

■ a. In paragraph (c)(1), by removing the words ''in accordance with the conditions and procedures described in § 147.26 of this chapter'' and adding the words ''in accordance with part 147 of this subchapter with respect to Mycoplasma isolation, sanitation, and management'' in their place.

■ b. In paragraph (c)(2), by removing the words ''applicable conditions outlined in § 147.26 of this chapter are being met'' and adding the words ''flock is being maintained in accordance with part 147 of this subchapter with respect to Mycoplasma isolation, sanitation, and management'' in their place.

■ c. By adding a sentence at the end of paragraph (e)(1).

■ d. In paragraph (e)(2), by removing the words ''the procedures outlined in § 147.6 of this chapter will be used to determine'' and by adding the words ''will be determined in accordance with part 147 of this subchapter'' before the period at the end of the paragraph.

■ e. By removing paragraph (e)(3).

■ f. In paragraph (f) introductory text, by removing the words ''as described in subpart C of part 147 of this chapter'' and adding the words ''in accordance with part 147 of this subchapter'' in their place.

■ g. In paragraphs (f)(2), (f)(4), and (f)(6), by removing the words ''as described in § 147.12 of this chapter'' and adding the words ''in accordance with part 147 of this subchapter'' in their place.

■ h. By revising paragraph (g)(3).

The revisions read as follows:

§ 145.43 Terminology and classification; flocks and products.

* * * * *

(e) * * *

(1) * * * It is recommended that samples be collected from birds with clinical signs of *M. synoviae* infection.

* * * * *

(g) * * *

(3) All spent fowl being marketed for meat from flocks that have been tested as required by this paragraph shall be tested at a rate of 6 birds per flock within 21 days prior to movement to slaughter.

* * * * *

■ 19. Add § 145.45 to read as follows:

§ 145.45 Terminology and classification; compartments.

(a) *U.S. H5/H7 Avian Influenza Clean Compartment.* This program is intended to be the basis from which the primary turkey breeding-hatchery industry may demonstrate the existence and implementation of a program that has been approved by the Official State Agency and the Service to establish a compartment consisting of a primary breeding-hatchery company that is free of H5/H7 avian influenza (AI), also referred to as notifiable avian influenza (NAI). This compartment has the purpose of protecting the defined subpopulation and avoiding the introduction and spread of NAI within that subpopulation by prohibiting contact with other commercial poultry operations, other domestic and wild birds, and other intensive animal operations. The program shall consist of the following:

(1) *Definition of the compartment.* Based on the guidelines established by the World Organization for Animal Health (OIE) in the Terrestrial Animal Health Code and the guidelines in this paragraph (a), the primary breeder company will define the compartment with respect to NAI. Specifically, the company will use a comprehensive biosecurity program to define the compartment as a subpopulation of poultry with a health status for NAI that is separate from birds and poultry outside the compartment. The Official State Agency and the Service must approve all documentation submitted to substantiate the defined compartment as adequate to qualify for epidemiological separation from other potential sources of infection of NAI. Guidelines for the definition of the compartment include:

(i) *Definition and description of the subpopulation of birds and their health status.* All birds included in the compartment must be U.S. H5/H7 Avian Influenza Clean in accordance with § 145.43(g). The poultry must also be located in a State that has an initial State response and containment plan approved by APHIS under § 56.10 of this chapter and that participates in the diagnostic surveillance program for H5/H7 low pathogenicity AI as described in § 145.15. Within the compartment, all official tests for AI, as described in § 145.14(d), must be conducted in State or Federal laboratories or in NPIP authorized laboratories that meet the minimum standards described in § 147.52 of this subchapter. In addition, the company must provide to the Service upon request any relevant historical and current NAI-related data for reference regarding surveillance for the disease within the compartment. Upon request, the company must also work with the Official State Agency to provide such data for other bird populations located in the State.

(ii) *Description of animal identification and traceability processes.* The primary breeder company must also include a description of its animal identification and traceability records, including examples of Veterinary Services (VS) Form 9–5, ''Report of Hatcheries, Dealers and Independent Flocks''; VS Form 9–2, ''Flock Selection and Testing Report''; VS Form 9–3, ''Report of Sales of Hatching Eggs, Chicks and Poults''; VS Form 9–9, '' Hatchery Inspection Report''; set and hatch records; egg receipts; and egg/chick invoices for the subpopulation. Documentation must also include breed identification (NPIP stock code). The Service should ensure that an effective flock identification system and traceability system are in place.

(iii) *Definition and description of the physical components or establishments of the defined compartment.* The

primary breeder company must provide documentation establishing that the defined compartment is epidemiologically separated from other poultry and bird populations. The documentation must be approved by the Official State Agency and the Service as indicating adequate epidemiological separation to maintain the compartment's separate health status with respect to NAI. The documentation should include descriptions of:

(A) The physical and spatial factors that separate the compartment from surrounding bird populations and affect the biosecurity status of the compartment.

(B) Relevant environmental factors that may affect exposure of the birds to AI.

(C) The functional boundary and fencing that are used to control access to the compartment.

(D) Facilities and procedures to prevent access by wild birds and to provide separation from other relevant hosts.

(E) The relevant infrastructural factors that may affect exposure to AI, including the construction and design of buildings or physical components, cleaning and disinfection of buildings and physical components between production groups with quality assurance verification, cleaning and disinfection of equipment, and introduction of equipment or material into the compartment.

(iv) *Definition and description of the functional relationships between components of the defined compartment.* Functional relationships between components of the compartment include traffic movement and flow at and among premises, personnel movement at and among premises, exposure to live bird populations, and any other factors that could affect biosecurity of the compartment. All physical components of the compartment must be maintained in compliance with hygiene and biosecurity procedures for poultry primary breeding flocks and hatcheries in accordance with part 147 of this subchapter. In addition, the company must provide a biosecurity plan for the compartment and all included components. The biosecurity plan should include:

(A) Requirements that company employees and contract growers limit their contact with live birds outside the compartment.

(B) An education and training program for company employees and contractors.

(C) Standard operating procedures for company employees, contractors, and outside maintenance personnel.

(D) Requirements for company employees and non-company personnel who visit any premises within the compartment.

(E) Company veterinary infrastructure to ensure flock monitoring and disease diagnosis and control measures.

(F) Policies for management of vehicles and equipment used within the compartment to connect the various premises.

(G) Farm site requirements (location, layout, and construction).

(H) Pest management program.

(I) Cleaning and disinfection process.

(J) Requirements for litter and dead bird removal and/or disposal.

(v) *Description of other factors important for maintaining the compartment.* The company veterinary infrastructure will assess sanitary measures, environmental risk factors, and management and husbandry practices that relate to the separation of the compartment and the health status of the birds contained within the compartment that may affect risk of exposure to NAI. This assessment must include a description of internal monitoring and auditing systems (e.g., quality assurance and quality control programs) to demonstrate the effectiveness of the compartment. Upon request, the Service will provide the company with information on the epidemiology of NAI and the associated risk pathways in which the components of the compartment are located is available from the Service.

(vi) *Approval or denial.* Based on this documentation provided under this paragraph (a)(1), as well as any other information the Service and the Official State Agency determine to be necessary, the Service and the Official State Agency will approve or deny the classification of the compartment as U.S. H5/H7 Avian Influenza Clean.

(2) *Company activities for maintenance of the compartment.* (i) The primary breeder company's management of biosecurity, surveillance, and disease control efforts must be uniform and equivalent among all components that are a part of the compartment. Oversight and inspection of these management practices must be conducted by the company's licensed, accredited veterinarians.

(ii) Veterinary staff from the Official State Agency and NPIP staff will work in partnership with licensed, accredited veterinarians to train and certify auditors through Service-approved workshops. The trained auditors will conduct biosecurity and operational audits at least once every 2 years to ensure the integrity of the compartment. These audits will include evaluation of the critical control points and standard operating practices within the compartment, verification of the health status of the flock(s) contained within the compartment, and examination of the biosecurity and management system of the integrated components of the compartment.

(iii) In addition, the company must demonstrate compliance with paragraph (a)(1) of this section for remaining in the U.S. H5/H7 Avian Influenza Clean classification, surveillance for NAI within the compartment, and conducting tests in State or Federal laboratories or in NPIP authorized laboratories. Accredited veterinarians are responsible for the enforcement of active and passive surveillance of NAI in primary breeder flocks. Baseline health status must be maintained for all flocks or subpopulations within the compartment, indicating the dates and negative results of all avian influenza surveillance and monitoring testing, the dates and history of last disease occurrence (if any), the number of outbreaks, and the methods of disease control that were applied.

(iv) Documentation will be maintained in the company's database and will be verified as required by the Service and/or the Official State Agency.

(3) *Service and Official State Agency activities for maintenance of the compartment.* The Service will work in cooperation with the Official State Agencies to ensure the continued integrity of any recognized compartments. Activities will include:

(i) Oversight of the establishment and management of compartments;

(ii) Establishment of effective partnerships between the Service, the Plan, and the primary breeder industry;

(iii) Approval or denial of classification of compartments as U.S. H5/H7 Avian Influenza Clean Compartments under paragraph (a)(1) of this section;

(iv) Official certification of the health status of the compartment, and commodities that may be traded from it through participation in the Plan for avian diseases, including the U.S. H5/H7 Avian Influenza Clean program as described in § 145.43(g) and diagnostic surveillance for H5/H7 low pathogenicity AI as described in § 145.15;

(v) Conducting audits of compartments at least once every 2 years to:

(A) Confirm that the primary breeding company's establishments are

epidemiologically distinct and pathways for the introduction of disease into the compartment are closed through routine operational procedures; and

(B) Evaluate and assess the management and husbandry practices relating to biosecurity to determine whether they are in compliance with hygiene and biosecurity procedures for poultry primary breeding flocks and hatcheries in accordance with part 147 of this subchapter;

(vi) Providing, upon request, model plans for management and husbandry practices relating to biosecurity in accordance with part 147 of this subchapter, risk evaluations in conjunction with the primary breeder industry (including disease surveillance such as VS Form 9–4, ''Summary of Breeding Flock Participation''), and diagnostic capability summaries and systems for initial State response and containment plans in accordance with § 56.10 of this chapter; and

(vii) Publicizing and sharing compartment information with international trading partners, upon request, to establish approval and recognition of the compartment, including timeliness and accuracy of disease reporting and surveillance measures as described in §§ 145.15 and 145.43(g).

(4) *Emergency response and notification.* In the case of a confirmed positive of NAI in the subpopulation of the compartment, the management of the compartment must notify the Service. The Service will immediately suspend the status of the compartment. A compartment will be eligible to resume trade with importing countries only after the compartment has adopted the necessary measures to reestablish the biosecurity level and confirm that NAI is not present in the compartment and the Service has reevaluated the management and biosecurity measures of the compartment and approved said compartment for trade.

(b) [Reserved]

■ 20. Section 145.52 is amended as follows:

■ a. In paragraph (b), by removing the words ''(see § 147.25 of this chapter)'' and adding the words ''in accordance with part 147 of this subchapter'' in their place.

■ b. By redesignating paragraphs (c) and (d) as paragraphs (d) and (e), respectively.

■ c. By adding a new paragraph (c).

The addition reads as follows:

§ 145.52 Participation.

* * * * *

(c) It is recommended that waterfowl flocks and gallinaceous flocks in open-air facilities be kept separate.

* * * * *

■ 21. Section 145.53 is amended as follows:

■ a. In paragraph (c)(1) introductory text, by removing the words ''in compliance with the provisions of § 147.26 of this chapter'' and adding the words ''in accordance with part 147 of this subchapter with respect to Mycoplasma isolation, sanitation, and management'' in their place.

■ b. In paragraph (c)(3), by removing the words ''as described in § 147.24(a) of this chapter'' and adding the words ''in accordance with part 147 of this subchapter'' in their place.

■ c. In paragraph (d)(1) introductory text, by removing the words ''in compliance with the provisions of § 147.26 of this chapter'' and adding the words ''in accordance with part 147 of this subchapter with respect to Mycoplasma isolation, sanitation, and management'' in their place.

■ d. In paragraph (d)(1)(ii)(B), by removing the words ''§ 147.8 of this chapter'' and adding the words ''part 147 of this subchapter'' in their place.

■ e. In paragraph (d)(3), by removing the words ''as described in § 147.24(a) of this chapter'' and adding the words ''in accordance with part 147 of this subchapter'' in their place.

■ f. By revising paragraphs (e)(1) introductory text and (e)(2) introductory text to read as set forth below.

■ g. In paragraphs (e)(1)(i) and (e)(1)(ii), by removing the number ''90'' and adding the number ''180'' in its place.

■ h. By revising paragraph (e)(3).

■ i. By adding paragraph (f).

The revision and addition read as follows:

§ 145.53 Terminology and classification; flocks and products.

* * * * *

(e) * * *

(1) It is a primary breeding flock in which a minimum of 30 birds has been tested negative to the H5 and H7 subtypes of avian influenza as provided in § 145.14(d) when more than 4 months of age; *Provided,* that waterfowl flocks may test a minimum of 30 cloacal swabs for virus isolation. To retain this classification:

* * * * *

(2) It is a multiplier breeding flock in which a minimum of 30 birds has been tested negative to the H5 and H7 subtypes of avian influenza as provided in § 145.14(d) when more than 4 months of age; *Provided,* that waterfowl flocks may test a minimum of 30 cloacal swabs for virus isolation. To retain this classification:

* * * * *

(3) A sample of at least 30 birds must be tested and found negative to H5/H7 avian influenza within 21 days prior to movement to slaughter.

(f) *U.S. Salmonella Monitored.* This program is intended to be the basis from which the hatching industry may conduct a program for the prevention and control of salmonellosis. It is intended to reduce the incidence of *Salmonella* organisms in day-old poultry through an effective and practical sanitation program in the hatchery. This will afford other segments of the poultry industry an opportunity to reduce the incidence of *Salmonella* in their products. The following requirements must be met for a flock to be of this classification:

(1) An Authorized Agent shall collect a minimum of five environmental samples, e.g., chick papers, hatching trays, and chick transfer devices, from the hatchery at least every 30 days. Testing must be performed at an authorized laboratory.

(2) To claim products are of this classification, all products shall be derived from a hatchery that meets the requirements of the classification.

(3) This classification may be revoked by the Official State Agency if the participant fails to follow recommended corrective measures.

* * * * *

§ 145.62 [Amended]

■ 22. In § 145.62, paragraph (b) is amended by removing the words ''(see § 147.22 of this chapter)'' and adding the words ''in accordance with part 147 of this subchapter'' in their place.

■ 23. In § 145.72, paragraph (b) is revised to read as follows:

§ 145.72 Participation.

* * * * *

(b) Hatching eggs produced by primary breeding flocks should be nest clean. They may be fumigated in accordance with part 147 of this subchapter or otherwise sanitized.

* * * * *

■ 24. Section 145.73 is amended as follows:

■ a. In paragraph (c)(1) introductory text, by removing the words ''in compliance with the provisions of § 147.26 of this subchapter'' and adding the words ''in accordance with part 147 of this subchapter with respect to Mycoplasma isolation, sanitation, and management'' in their place.

■ b. In paragraph (c)(3), by removing the words ''as described in § 147.24(a)'' and

adding the words ''in accordance with part 147'' in their place.

■ c. In paragraph (d)(1)(iv), by removing the words ''in compliance with §§ 147.21, 147.24(a), and 147.26 of this subchapter'' and adding the words ''in accordance with part 147 of this subchapter with respect to flock sanitation, cleaning and disinfection, and Salmonella isolation, sanitation, and management'' in their place.

■ d. In paragraph (d)(1)(v), by removing the words ''as described in § 147.12'' and adding the words ''in accordance with part 147'' in their place.

■ e. In paragraph (d)(1)(vii), by removing the words ''as described in § 147.11'' and adding the words ''in accordance with part 147'' in their place.

■ f. By revising paragraph (d)(1)(ix).

■ g. In paragraph (d)(2), by removing the words ''as described in § 147.11(a)'' and adding the words ''in accordance with part 147'' in their place.

■ h. In paragraph (e)(1) introductory text, by removing the words ''in compliance with the provisions of § 147.26 of this subchapter'' and adding the words ''in accordance with part 147 of this subchapter with respect to Mycoplasma isolation, sanitation, and management'' in their place.

■ i. In paragraph (e)(3), by removing the words ''as described in § 147.24(a)'' and adding the words ''in accordance with part 147'' in their place.

■ j. In paragraph (f)(1) introductory text, by adding the words ''and found'' before the word ''negative'' and by removing the words ''for antibodies''.

■ k. By revising paragraph (f)(2).

The revisions read as follows:

§ 145.73 Terminology and classification; flocks and products.

* * * * *

(d) * * *

(1) * * *

(ix) Hatching eggs produced by the flock are incubated in a hatchery whose sanitation is maintained in accordance with part 147 of this subchapter and sanitized either by a procedure approved by the Official State Agency or in accordance with part 147 of this subchapter.

* * * * *

(f) * * *

(2) A sample of at least 11 birds must be tested and found negative to avian influenza within 21 days prior to movement to slaughter.

■ 25. A new § 145.74 is added to read as follows:

§ 145.74 Terminology and classification; compartments.

(a) *U.S. Avian Influenza Clean Compartment.* This program is intended to be the basis from which the primary egg-type chicken breeding-hatchery industry may demonstrate the existence and implementation of a program that has been approved by the Official State Agency and the Service to establish a compartment consisting of a primary breeding-hatchery company that is free of H5/H7 avian influenza (AI), also referred to as notifiable avian influenza (NAI). This compartment has the purpose of protecting the defined subpopulation and avoiding the introduction and spread of NAI within that subpopulation by prohibiting contact with other commercial poultry operations, other domestic and wild birds, and other intensive animal operations. The program shall consist of the following:

(1) *Definition of the compartment.* Based on the guidelines established by the World Organization for Animal Health (OIE) in the Terrestrial Animal Health Code and the guidelines in this paragraph (a), the primary breeder company will define the compartment with respect to NAI. Specifically, the company will use a comprehensive biosecurity program to define the compartment as a subpopulation of poultry with a health status for NAI that is separate from birds and poultry outside the compartment. The Official State Agency and the Service must approve all documentation submitted to substantiate the defined compartment as adequate to qualify for epidemiological separation from other potential sources of infection of NAI. Guidelines for the definition of the compartment include:

(i) *Definition and description of the subpopulation of birds and their health status.* All birds included in the compartment must be U.S. Avian Influenza Clean in accordance with § 145.73(f). The poultry must also be located in a State that has an initial State response and containment plan approved by APHIS under § 56.10 of this chapter and that participates in the diagnostic surveillance program for H5/H7 low pathogenicity AI as described in § 145.15. Within the compartment, all official tests for AI, as described in § 145.14(d), must be conducted in State or Federal laboratories or in NPIP authorized laboratories that meet the minimum standards described in § 147.52 of this subchapter. In addition, the company must provide to the Service upon request any relevant historical and current NAI-related data for reference regarding surveillance for the disease within the compartment. Upon request, the company must also work with the Official State Agency to provide such data for other bird populations located in the State.

(ii) *Description of animal identification and traceability processes.* The primary breeder company must also include a description of its animal identification and traceability records, including examples of Veterinary Services (VS) Form 9–5, ''Report of Hatcheries, Dealers and Independent Flocks''; VS Form 9–2, ''Flock Selection and Testing Report''; VS Form 9–3, ''Report of Sales of Hatching Eggs, Chicks and Poults''; VS Form 9–9, ''Hatchery Inspection Report''; set and hatch records; egg receipts; and egg/chick invoices for the subpopulation. Documentation must also include breed identification (NPIP stock code). The Service should ensure that an effective flock identification system and traceability system are in place.

(iii) *Definition and description of the physical components or establishments of the defined compartment.* The primary breeder company must provide documentation establishing that the defined compartment is epidemiologically separated from other poultry and bird populations. The documentation must be approved by the Official State Agency and the Service as indicating adequate epidemiological separation to maintain the compartment's separate health status with respect to NAI. The documentation should include descriptions of:

(A) The physical and spatial factors that separate the compartment from surrounding bird populations and affect the biosecurity status of the compartment.

(B) Relevant environmental factors that may affect exposure of the birds to AI.

(C) The functional boundary and fencing that are used to control access to the compartment.

(D) Facilities and procedures to prevent access by wild birds and to provide separation from other relevant hosts.

(E) The relevant infrastructural factors that may affect exposure to AI, including the construction and design of buildings or physical components, cleaning and disinfection of buildings and physical components between production groups with quality assurance verification, cleaning and disinfection of equipment, and introduction of equipment or material into the compartment.

(iv) *Definition and description of the functional relationships between components of the defined compartment.* Functional relationships between components of the compartment include traffic movement and flow at and among premises, personnel movement at and among

premises, exposure to live bird populations, and any other factors that could affect biosecurity of the compartment. All physical components of the compartment must be maintained in compliance with hygiene and biosecurity procedures for poultry primary breeding flocks and hatcheries in accordance with part 147 of this subchapter. In addition, the company must provide a biosecurity plan for the compartment and all included components. The biosecurity plan should include:

(A) Requirements that company employees and contract growers limit their contact with live birds outside the compartment.

(B) An education and training program for company employees and contractors.

(C) Standard operating procedures for company employees, contractors, and outside maintenance personnel.

(D) Requirements for company employees and non-company personnel who visit any premises within the compartment.

(E) Company veterinary infrastructure to ensure flock monitoring and disease diagnosis and control measures.

(F) Policies for management of vehicles and equipment used within the compartment to connect the various premises.

(G) Farm site requirements (location, layout, and construction).

(H) Pest management program.

(I) Cleaning and disinfection process.

(J) Requirements for litter and dead bird removal and/or disposal.

(v) *Description of other factors important for maintaining the compartment.* The company veterinary infrastructure will assess sanitary measures, environmental risk factors, and management and husbandry practices that relate to the separation of the compartment and the health status of the birds contained within the compartment that may affect risk of exposure to NAI. This assessment must include a description of internal monitoring and auditing systems (e.g., quality assurance and quality control programs) to demonstrate the effectiveness of the compartment. Upon request, the Service will provide the company with information on the epidemiology of NAI and the associated risk pathways in which the components of the compartment are located is available from the Service.

(vi) *Approval or denial.* Based on the documentation provided under this paragraph (a)(1), as well as any other information the Service and the Official State Agency determine to be necessary, the Service and the Official State Agency will approve or deny the classification of the compartment as U.S. Avian Influenza Clean.

(2) *Company activities for maintenance of the compartment.* (i) The primary breeder company's management of biosecurity, surveillance, and disease control efforts must be uniform and equivalent among all components that are a part of the compartment. Oversight and inspection of these management practices must be conducted by the company's licensed, accredited veterinarians.

(ii) Veterinary staff from the Official State Agency and NPIP staff will work in partnership with licensed, accredited veterinarians to train and certify auditors through Service-approved workshops. The trained auditors will conduct biosecurity and operational audits at least once every 2 years to ensure the integrity of the compartment. These audits will include evaluation of the critical control points and standard operating practices within the compartment, verification of the health status of the flock(s) contained within the compartment, and examination of the biosecurity and management system of the integrated components of the compartment.

(iii) In addition, the company must demonstrate compliance with paragraph (a)(1) of this section for remaining in the U.S. Avian Influenza Clean classification, surveillance for NAI within the compartment, and conducting tests in State or Federal laboratories or in NPIP authorized laboratories. Accredited veterinarians are responsible for the enforcement of active and passive surveillance of NAI in primary breeder flocks. Baseline health status must be maintained for all flocks or subpopulations within the compartment, indicating the dates and negative results of all avian influenza surveillance and monitoring testing, the dates and history of last disease occurrence (if any), the number of outbreaks, and the methods of disease control that were applied.

(iv) Documentation will be maintained in the company's database and will be verified as required by the Service and/or the Official State Agency.

(3) *Service and Official State Agency activities for maintenance of the compartment.* The Service will work in cooperation with the Official State Agencies to ensure the continued integrity of any recognized compartments. Activities will include:

(i) Oversight of the establishment and management of compartments;

(ii) Establishment of effective partnerships between the Service, the Plan, and the primary breeder industry;

(iii) Approval or denial of classification of compartments as U.S. Avian Influenza Clean Compartments under paragraph (a)(1) of this section;

(iv) Official certification of the health status of the compartment, and commodities that may be traded from it through participation in the Plan for avian diseases, including the U.S. Avian Influenza Clean program as described in § 145.73(f) and diagnostic surveillance for H5/H7 low pathogenicity AI as described in § 145.15;

(v) Conducting audits of compartments at least once every 2 years to:

(A) Confirm that the primary breeding company's establishments are epidemiologically distinct and pathways for the introduction of disease into the compartment are closed through routine operational procedures; and

(B) Evaluate and assess the management and husbandry practices relating to biosecurity to determine whether they are in compliance with hygiene and biosecurity procedures for poultry primary breeding flocks and hatcheries in accordance with part 147 of this subchapter;

(vi) Providing, upon request, model plans for management and husbandry practices relating to biosecurity in accordance with part 147 of this subchapter, risk evaluations in conjunction with the primary breeder industry (including disease surveillance such as VS Form 9–4, ''Summary of Breeding Flock Participation''), and diagnostic capability summaries and systems for initial State response and containment plans in accordance with § 56.10 of this chapter; and

(vii) Publicizing and sharing compartment information with international trading partners, upon request, to establish approval and recognition of the compartment, including timeliness and accuracy of disease reporting and surveillance measures as described in §§ 145.15 and 145.73(f).

(4) *Emergency response and notification.* In the case of a confirmed positive of NAI in the subpopulation of the compartment, the management of the compartment must notify the Service. The Service will immediately suspend the status of the compartment. A compartment will be eligible to resume trade with importing countries only after the compartment has adopted the necessary measures to reestablish the biosecurity level and confirm that NAI is not present in the compartment

and the Service has reevaluated the management and biosecurity measures of the compartment and approved said compartment for trade.

(b) [Reserved]

■ 26. In § 145.82, paragraph (b) is revised to read as follows:

§ 145.82 Participation.

* * * * *

(b) Hatching eggs produced by primary breeding flocks should be nest clean. They may be fumigated in accordance with part 147 of this subchapter or otherwise sanitized.

* * * * *

■ 27. Section 145.83 is amended as follows:

■ a. In paragraph (c)(1) introductory text, by removing the words ''in compliance with the provisions of § 147.26 of this subchapter'' and adding the words ''in accordance with part 147 of this subchapter with respect to Mycoplasma isolation, sanitation, and management'' in their place.

■ b. In paragraph (c)(3), by removing the words ''as described in § 147.24(a)'' and adding the words ''in accordance with part 147'' in their place.

■ c. In paragraph (d)(1) introductory text, by removing the words ''in compliance with the provisions of § 147.26 of this subchapter'' and adding the words ''in accordance with part 147 of this subchapter with respect to Mycoplasma isolation, sanitation, and management'' in their place.

■ d. In paragraph (d)(3), by removing the words ''as described in § 147.24(a)'' and adding the words ''in accordance with part 147'' in their place.

■ e. By revising paragraphs (e)(1) and (e)(3).

■ f. In paragraph (e)(6) introductory text, by removing the words ''or great-grandparent'' and adding the words ''great-grandparent, or grandparent'' in their place.

■ g. In paragraph (e)(6)(i)(B), by removing the words ''as described in § 147.12(a)'' and adding the words ''in accordance with part 147'' in their place.

■ h. In paragraph (e)(6)(i)(C), by removing the words ''as described in § 147.11'' and adding the words ''in accordance with part 147'' in their place.

■ i. In paragraph (e)(6)(i)(D), by removing the words ''as specified in § 147.12(a)'' and adding the words ''in accordance with part 147'' in their place.

■ j. In paragraph (f)(1)(i), by removing the words ''in compliance with §§ 147.21, 147.24(a), and 147.26 of this subchapter'' and adding the words ''in accordance with part 147 of this subchapter with respect to flock sanitation, cleaning and disinfection, and Salmonella isolation, sanitation, and management'' in their place.

■ k. By revising paragraph (f)(1)(iv).

■ l. In paragraph (f)(1)(vi), by removing the words ''as described in § 147.12'' and adding the words ''in accordance with part 147'' in their place.

■ m. By revising paragraph (f)(2).

■ n. In paragraph (g)(1) introductory text, by adding the words ''using an approved test as described in § 145.14'' after the word ''influenza''.

■ o. By revising paragraph (g)(2).

The revisions read as follows:

§ 145.83 Terminology and classification; flocks and products.

* * * * *

(e) * * *

(1) A flock and the hatching eggs and chicks produced from it shall be eligible for this classification if they meet the following requirements, as determined by the Official State Agency:

(i) The flock originated from a U.S. S. Enteritidis Clean flock, or one of the following samples has been examined bacteriologically for *S. enteritidis* at an authorized laboratory in accordance with part 147 of this subchapter and any group D Salmonella samples have been serotyped:

(A) A sample of chick papers, hatcher tray swabs, or fluff collected and cultured in accordance with part 147 of this subchapter; and

(B) Samples of intestinal and liver or spleen tissues from a minimum of 30 chicks that died within 7 days after hatching and have been preserved daily by freezing prior to shipment to an authorized laboratory.

(ii) The flock is maintained in compliance with isolation, sanitation, and management procedures for Salmonella in accordance with part 147 of this subchapter.

(iii) Environmental samples are collected from the flock by or under the supervision of an Authorized Agent, in accordance with part 147 of this subchapter, when the flock reaches 4 months of age and every 30 days thereafter. Once the flock is in egg production and chicks are hatching from it, the samples must include at least 4 individual test assay results every 30 days in flocks of more than 500 birds or 2 individual assays per month in flocks of 500 birds or fewer. One of these results must come from samples collected from hatched chicks at a participating hatchery derived from said flock. These individual test assays may be derived from pooled samples from the farm or hatchery in accordance with part 147 of this subchapter, but must be run as separate test assays in the laboratory. The environmental samples shall be examined bacteriologically for group D Salmonella at an authorized laboratory, and cultures from group D positive samples shall be serotyped.

(iv) Blood samples from 300 birds from the flock are officially tested with pullorum antigen when the flock is at least 4 months of age. All birds with positive or inconclusive reactions, up to a maximum of 25 birds, shall be submitted to an authorized laboratory and examined for the presence of group D Salmonella in accordance with part 147 of this subchapter. Cultures from group D positive samples shall be serotyped.

(v) Hatching eggs produced by the flock are collected as quickly as possible and their sanitation is maintained in accordance with part 147 of this subchapter.

(vi) Hatching eggs produced by the flock are incubated in a hatchery whose sanitation is maintained in accordance with part 147 of this subchapter, and the hatchery must have been sanitized either by a procedure approved by the Official State Agency or by fumigation in accordance with part 147 of this subchapter.

(2) * * *

(3) If SE is isolated from an environmental sample collected from the flock in accordance with paragraph (e)(1)(iii) of this section, an additional environmental sampling and 25 live cull birds or fresh dead birds (if present), or other randomly selected live birds if fewer than 25 culls can be found in the flock, must be bacteriologically examined for SE in accordance with part 147 of this subchapter. If only 1 bird from the 25-bird sample is found positive for SE, the participant may request bacteriological examination of a second 25-bird sample from the flock. In addition, if the flock with the SE isolation is in egg production and eggs are under incubation, the next four consecutive hatches shall be examined bacteriologically in accordance with part 147 of this subchapter. Samples shall be collected from all of the hatching unit's chick trays and basket trays of hatching eggs, or from all chick box papers from the flock, and tested, pooling the samples into a minimum of 10 separate assays. Any followup hatchery-positive SE isolations shall result in discontinuation of subsequent hatches until the flock status is determined by bird culture. The flock will be disqualified for the U.S. S. Enteritidis Clean classification if a bird or subsequent flock environmental assay results in isolation of SE.

* * * * *

(f) * * *

(1) * * *

(iv) Chicks shall be hatched in a hatchery whose sanitation is maintained in accordance with part 147 of this subchapter and sanitized or fumigated in accordance with part 147 of this subchapter.

* * * * *

(2) The Official State Agency may monitor the effectiveness of the sanitation practices in accordance with part 147 of this subchapter.

* * * * *

(g) * * *

(2) During each 90-day period, all primary spent fowl, up to a maximum of 30 must be tested serologically and found negative for antibodies to avian influenza within 21 days prior to slaughter.

■ 28. Add § 145.84 to read as follows:

§ 145.84 Terminology and classification; compartments.

(a) *U.S. Avian Influenza Clean Compartment.* This program is intended to be the basis from which the primary meat-type chicken breeding-hatchery industry may demonstrate the existence and implementation of a program that has been approved by the Official State Agency and the Service to establish a compartment consisting of a primary breeding-hatchery company that is free of H5/H7 avian influenza (AI), also referred to as notifiable avian influenza (NAI). This compartment has the purpose of protecting the defined subpopulation and avoiding the introduction and spread of NAI within that subpopulation by prohibiting contact with other commercial poultry operations, other domestic and wild birds, and other intensive animal operations. The program shall consist of the following:

(1) *Definition of the compartment.* Based on the guidelines established by the World Organization for Animal Health (OIE) in the Terrestrial Animal Health Code and the guidelines in this paragraph (a), the primary breeder company will define the compartment with respect to NAI. Specifically, the company will use a comprehensive biosecurity program to define the compartment as a subpopulation of poultry with a health status for NAI that is separate from birds and poultry outside the compartment. The Official State Agency and the Service must approve all documentation submitted to substantiate the defined compartment as adequate to qualify for epidemiological separation from other potential sources of infection of NAI. Guidelines for the definition of the compartment include:

(i) *Definition and description of the subpopulation of birds and their health status.* All birds included in the compartment must be U.S. Avian Influenza Clean in accordance with § 145.83(g). The poultry must also be located in a State that has an initial State response and containment plan approved by APHIS under § 56.10 of this chapter and that participates in the diagnostic surveillance program for H5/H7 low pathogenicity AI as described in § 145.15. Within the compartment, all official tests for AI, as described in § 145.14(d), must be conducted in State or Federal laboratories or in NPIP authorized laboratories that meet the minimum standards described in § 147.52 of this subchapter. In addition, the company must provide to the Service upon request any relevant historical and current NAI-related data for reference regarding surveillance for the disease and the health status of the compartment. Upon request, the company must also work with the Official State Agency to provide such data other bird populations located in the State.

(ii) *Description of animal identification and traceability processes.* The primary breeder company must also include a description of its animal identification and traceability records, including examples of Veterinary Services (VS) Form 9–5, ''Report of Hatcheries, Dealers and Independent Flocks''; VS Form 9–2, ''Flock Selection and Testing Report''; VS Form 9–3, ''Report of Sales of Hatching Eggs, Chicks and Poults''; VS Form 9–9, '' Hatchery Inspection Report''; set and hatch records; egg receipts; and egg/chick invoices for the subpopulation. Documentation must also include breed identification (NPIP stock code). The Service should ensure that an effective flock identification system and traceability system are in place.

(iii) *Definition and description of the physical components or establishments of the defined compartment.* The primary breeder company must provide documentation establishing that the defined compartment is epidemiologically separated from other poultry and bird populations. The documentation must be approved by the Official State Agency and the Service as indicating adequate epidemiological separation to maintain the compartment's separate health status with respect to NAI. The documentation should include descriptions of:

(A) The physical and spatial factors that separate the compartment from surrounding bird populations and affect the biosecurity status of the compartment.

(B) Relevant environmental factors that may affect exposure of the birds to AI.

(C) The functional boundary and fencing that are used to control access to the compartment.

(D) Facilities and procedures to prevent access by wild birds and to provide separation from other relevant hosts.

(E) The relevant infrastructural factors that may affect exposure to AI, including the construction and design of buildings or physical components, cleaning and disinfection of buildings and physical components between production groups with quality assurance verification, cleaning and disinfection of equipment, and introduction of equipment or material into the compartment.

(iv) *Definition and description of the functional relationships between components of the defined compartment.* Functional relationships between components of the compartment include traffic movement and flow at and among premises, personnel movement at and among premises, exposure to live bird populations, and any other factors that could affect biosecurity of the compartment. All physical components of the compartment must be maintained in compliance with hygiene and biosecurity procedures for poultry primary breeding flocks and hatcheries in accordance with part 147 of this subchapter. In addition, the company must provide a biosecurity plan for the compartment and all included components. The biosecurity plan should include:

(A) Requirements that company employees and contract growers limit their contact with live birds outside the compartment.

(B) An education and training program for company employees and contractors.

(C) Standard operating procedures for company employees, contractors, and outside maintenance personnel.

(D) Requirements for company employees and non-company personnel who visit any premises within the compartment.

(E) Company veterinary infrastructure to ensure flock monitoring and disease diagnosis and control measures.

(F) Policies for management of vehicles and equipment used within the compartment to connect the various premises.

(G) Farm site requirements (location, layout, and construction).

(H) Pest management program.

(I) Cleaning and disinfection process.

(J) Requirements for litter and dead bird removal and/or disposal.

(v) *Description of other factors important for maintaining the compartment.* The company veterinary infrastructure will assess sanitary measures, environmental risk factors, and management and husbandry practices that relate to the separation of the compartment and the health status of the birds contained within the compartment that may affect risk of exposure to NAI. This assessment must include a description of internal monitoring and auditing systems (e.g., quality assurance and quality control programs) to demonstrate the effectiveness of the compartment. Upon request, the Service will provide the company with information on the epidemiology of NAI and the associated risk pathways in which the components of the compartment are located is available from the Service.

(vi) *Approval or denial.* Based on the documentation provided under this paragraph (a)(1), as well as any other information the Service and the Official State Agency determine to be necessary, the Service and the Official State Agency will approve or deny the classification of the compartment as U.S. Avian Influenza Clean.

(2) *Company activities for maintenance of the compartment.* (i) The primary breeder company's management of biosecurity, surveillance, and disease control efforts must be uniform and equivalent among all components that are a part of the compartment. Oversight and inspection of these management practices must be conducted by the company's licensed, accredited veterinarians.

(ii) Veterinary staff from the Official State Agency and NPIP staff will work in partnership with licensed, accredited veterinarians to train and certify auditors through Service-approved workshops. The trained auditors will conduct biosecurity and operational audits at least once every 2 years to ensure the integrity of the compartment. These audits will include evaluation of the critical control points and standard operating practices within the compartment, verification of the health status of the flock(s) contained within the compartment, and examination of the biosecurity and management system of the integrated components of the compartment.

(iii) In addition, the company must demonstrate compliance with paragraph (a)(1) of this section for remaining in the U.S. Avian Influenza Clean classification, surveillance for NAI within the compartment, and conducting tests in State or Federal laboratories or in NPIP authorized laboratories. Accredited veterinarians are responsible for the enforcement of active and passive surveillance of NAI in primary breeder flocks. Baseline health status must be maintained for all flocks or subpopulations within the compartment, indicating the dates and negative results of all avian influenza surveillance and monitoring testing, the dates and history of last disease occurrence (if any), the number of outbreaks, and the methods of disease control that were applied.

(iv) Documentation will be maintained in the company's database and will be verified as required by the Service and/or the Official State Agency.

(3) *Service and Official State Agency activities for maintenance of the compartment.* The Service will work in cooperation with the Official State Agencies to ensure the continued integrity of any recognized compartments. Activities will include:

(i) Oversight of the establishment and management of compartments;

(ii) Establishment of effective partnerships between the Service, the Plan, and the primary breeder industry;

(iii) Approval or denial of classification of compartments as U.S. Avian Influenza Clean Compartments under paragraph (a)(1) of this section;

(iv) Official certification of the health status of the compartment, and commodities that may be traded from it through participation in the Plan for avian diseases, including the U.S. Avian Influenza Clean program as described in § 145.83(g) and diagnostic surveillance for H5/H7 low pathogenicity AI as described in § 145.15;

(v) Conducting audits of compartments at least once every 2 years to:

(A) Confirm that the primary breeding company's establishments are epidemiologically distinct and pathways for the introduction of disease into the compartment are closed through routine operational procedures; and

(B) Evaluate and assess the management and husbandry practices relating to biosecurity to determine whether they are in compliance with hygiene and biosecurity procedures for poultry primary breeding flocks and hatcheries in accordance with part 147 of this subchapter;

(vi) Providing, upon request, model plans for management and husbandry practices relating to biosecurity in accordance with part 147 of this subchapter, risk evaluations in conjunction with the primary breeder industry (including disease surveillance such as VS Form 9–4, ''Summary of Breeding Flock Participation''), and diagnostic capability summaries and systems for initial State response and containment plans in accordance with § 56.10 of this chapter; and

(vii) Publicizing and sharing compartment information with international trading partners, upon request, to establish approval and recognition of the compartment, including timeliness and accuracy of disease reporting and surveillance measures as described in §§ 145.15 and 145.83(g).

(4) *Emergency response and notification.* In the case of a confirmed positive of NAI in the subpopulation of the compartment, the management of the compartment must notify the Service. The Service will immediately suspend the status of the compartment. A compartment would be eligible to resume trade with importing countries only after the compartment has adopted the necessary measures to reestablish the biosecurity level and confirm that NAI is not present in the compartment and the Service has reevaluated the management and biosecurity measures of the compartment and approved said compartment for trade.

(b) [Reserved]

§ 145.92 [Amended]

■ 29. In § 145.92, paragraph (b) is amended by removing the words ''(see § 147.25 of this chapter)'' and adding the words ''in accordance with part 147 of this subchapter'' in their place.

■ 30. Section 145.93 is amended as follows:

■ a. By revising paragraph (c)(3).

■ b. By adding a new paragraph (d).

The revision and addition read as follows:

§ 145.93 Terminology and classification; flocks and products.

* * * * *

(c) * * *

(3) A sample of at least 30 birds must be tested and found negative to H5/H7 avian influenza within 21 days prior to movement to slaughter.

(d) *U.S. Salmonella Monitored.* This program is intended to be the basis from which the breeding-hatching industry may conduct a program for the prevention and control of salmonellosis. It is intended to reduce the incidence of *Salmonella* organisms in hatching eggs and day-old waterfowl through an effective and practical sanitation program at the breeder farm and in the hatchery. This will afford other segments of the poultry industry an opportunity to reduce the incidence of Salmonella in their products.

(1) A flock and the hatching eggs and day-old waterfowl produced from it must meet the following requirements, as determined by the Official State Agency, to be eligible for this classification:

(i) The flock is maintained in compliance with isolation, sanitation, and management procedures for Salmonella in accordance with part 147 of this subchapter.

(ii) If feed contains animal protein, the protein products must have been heated throughout to a minimum temperature of 190 °F or above, or to a minimum temperature of 165 °F for at least 20 minutes, or to a minimum temperature of 184 °F under 70 lbs. pressure during the manufacturing process.

(iii) Feed shall be stored and transported in a manner that prevents contamination.

(iv) Waterfowl shall be hatched in a hatchery whose sanitation is maintained in accordance with part 147 of this subchapter and sanitized or fumigated in accordance with part 147 of this subchapter.

(v) An Authorized Agent shall take environmental samples from the hatchery every 30 days, i.e., meconium or box liner paper. An authorized laboratory for Salmonella shall examine the samples bacteriologically.

(vi) An Authorized Agent shall take environmental samples in accordance with part 147 of this subchapter from each flock at 4 months of age and every 30 days thereafter. An authorized laboratory for Salmonella shall examine the environmental samples bacteriologically.

(vii) Flocks may be vaccinated with a paratyphoid vaccine: *Provided,* that a sample of at least 100 birds will be segregated and shall remain unvaccinated until the flock reaches at least 4 months of age.

(2) The Official State Agency may monitor the effectiveness of the egg sanitation practices in accordance with part 147 of this subchapter.

(3) To claim products are of this classification, all products shall be derived from a hatchery and flock that meet the requirements of the classification.

(4) This classification may be revoked by the Official State Agency if the participant fails to follow recommended corrective measures.

PART 146—NATIONAL POULTRY IMPROVEMENT PLAN FOR COMMERCIAL POULTRY

■ 31. The authority citation for part 146 continues to read as follows:

Authority: 7 U.S.C. 8301–8317; 7 CFR 2.22, 2.80, and 371.4.

■ 32. Section 146.1 is amended as follows:

■ a. By revising the definition of *authorized laboratory.*

■ b. In the definition of *commercial meat-type flock,* by adding the words ''spent fowl,'' after the word ''chickens,''.

■ c. In the definition of *H5/H7 low pathogenic avian influenza (LPAI),* by adding the words ''or equal to'' before the number ''1.2'' and by adding the word ''causes'' before the words ''less than 75''.

■ d. In the definition of *H5/H7 LPAI virus infection (infected),* by adding the words ''the Cooperating State Agency, the Official State Agency, and'' before the word ''APHIS''.

The revision reads as follows:

§ 146.1 Definitions.

* * * * *

Authorized laboratory. An authorized laboratory is a laboratory that meets the requirements of § 147.52 and is thus qualified to perform the assays in accordance with part 147 of this subchapter.

* * * * *

§ 146.2 [Amended]

■ 33. In § 146.2, paragraph (e) is amended by removing the words ''follow the laboratory protocols outlined in part 147 of this chapter'' and adding the words ''conduct tests in accordance with part 147 of this subchapter'' in their place.

§ 146.3 [Amended]

■ 34. Section 146.3 is amended as follows:

■ a. In paragraph (c), by adding the words '', spent fowl,'' after the word ''chicken''.

■ b. By removing paragraph (e).

§ 146.5 [Amended]

■ 35. In § 146.5, paragraph (b) is amended by removing the words ''as recommended in § 147.21(c)'' and adding the words ''in accordance with part 147'' in their place.

■ 36. In § 146.11, paragraph (b) is revised to read as follows:

§ 146.11 Inspections.

* * * * *

(b) A flock will be considered to be not conforming to protocol if there are no test results available, if samples from the flock were not collected and tested within 21 days prior to slaughter, or if the test results for the flocks were not returned prior to movement to slaughter.

* * * * *

■ 37. Section 146.13 is amended as follows:

■ a. In paragraph (a)(1), by removing the words ''the requirements in § 147.8'' and adding the words ''part 147'' in their place.

■ b. By revising paragraph (b)(1)(ii)(C).

■ c. In paragraph (b)(2)(i), by removing the word ''(AVPR01510)''.

■ d. By revising paragraph (b)(2)(ii)(B).

The revisions read as follows:

§ 146.13 Testing.

* * * * *

(b) * * *

(1) * * *

(ii) * * *

(C) The AGID test for avian influenza must be conducted in accordance with part 147 of this subchapter. The test can be conducted on egg yolk or blood samples. The AGID test is not recommended for use in waterfowl.

* * * * *

(2) * * *

(ii) * * *

(B) Chicken and turkey flocks that test positive on the ACIA must be retested using the RRT–PCR or virus isolation. Positive results from the RRT–PCR or virus isolation must be further tested by Federal Reference Laboratories using appropriate tests for confirmation. Final judgment may be based upon further sampling and appropriate tests for confirmation.

* * * * *

■ 38. Section 146.23 is amended by revising the introductory text of paragraphs (a), (a)(1), and (a)(2) to read as follows:

§ 146.23 Terminology and classification; flocks and products.

* * * * *

(a) *U.S. H5/H7 Avian Influenza Monitored.*

(1) *Table-egg layer pullet flocks.* This program is intended to be the basis from which the table-egg layer industry may conduct a program to monitor for the H5/H7 subtypes of avian influenza. It is intended to determine the presence of the H5/H7 subtypes of avian influenza in table-egg layer pullets through routine surveillance of each participating commercial table-egg layer pullet flock. A flock will qualify for this classification when the Official State Agency determines that it has met one of the following requirements:

* * * * *

(2) *Table-egg layer flocks.* This program is intended to be the basis from which the table-egg layer industry may conduct a program to monitor for the H5/H7 subtypes of avian influenza. It is intended to determine the presence of the H5/H7 subtypes of avian influenza

in table-egg layer through routine surveillance of each participating commercial table-egg layer flock. A flock will qualify for this classification when the Official State Agency determines that it has met one of the following requirements:

* * * * *

■ 39. Section 146.31 is amended by adding, in alphabetical order, a definition of *spent fowl* to read as follows:

§ 146.31 Definitions.

* * * * *

Spent fowl. Domesticated poultry that were in production of hatching eggs or commercial table eggs and have been removed from such production.

■ 40. Section 146.32 is amended by adding a new paragraph (c) to read as follows:

§ 146.32 Participation.

* * * * *

(c) If spent fowl are slaughtered at meat-type chicken slaughter plants that participate in the Plan, they may participate in the Plan through the provisions of this subpart C.

■ 41. Section 146.33 is amended as follows:

■ a. In paragraph (a)(1), by removing the words ''for antibodies''.

■ b. By revising paragraph (a)(2).

The revision reads as follows:

§ 146.33 Terminology and classification; meat-type chicken slaughter plants.

* * * * *

(a) * * *

(2) It is a meat-type chicken slaughter plant which accepts only meat-type chickens or spent fowl from flocks where samples from a minimum of 11 birds have been collected no more than 21 days prior to slaughter and tested negative to the H5/H7 subtypes of avian influenza, as provided in § 146.13(b); or

* * * * *

■ 42. In § 146.43, paragraph (a)(1) is revised to read as follows:

§ 146.43 Terminology and classification; meat-type turkey slaughter plants.

* * * * *

(a) * * *

(1) It is a meat-type turkey slaughter plant that accepts only meat-type turkeys from flocks where a minimum of 6 samples per flock have been collected no more than 21 days prior to movement to slaughter and tested negative with an approved test for type A avian influenza, as provided in § 146.13(b). It is recommended that samples be collected from flocks over 10 weeks of age with respiratory signs such as coughing, sneezing, snicking, sinusitis, or rales; depression; or decreases in food or water intake.

* * * * *

PART 147–AUXILIARY PROVISIONS ON NATIONAL POULTRY IMPROVEMENT PLAN

■ 43. The authority citation for part 147 continues to read as follows:

Authority: 7 U.S.C. 8301–8317; 7 CFR 2.22, 2.80, and 371.4.

■ 44. Section 147.1 is revised to read as follows:

§ 147.1 Blood testing procedures.

Blood testing must be conducted in a manner approved by the Administrator. Approved blood testing procedures are listed in the NPIP Program Standards, as defined in § 147.51. Blood testing procedures may also be approved by the Administrator in accordance with § 147.53(d)(1).

§§ 147.2 through 147.9 [Removed and Reserved]

■ 45. Sections 147.2 through 147.9 are removed and reserved.

■ 46. Section 147.10 is revised to read as follows:

§ 147.10 Bacteriological examination procedures.

Bacteriological examination must be conducted in a manner approved by the Administrator. Approved bacteriological examination procedures are listed in the NPIP Program Standards, as defined in § 147.51. Bacteriological examination procedures may also be approved by the Administrator in accordance with § 147.53(d)(1).

§§ 147.11 through 147.17 [Removed and Reserved]

■ 47. Sections 147.11 through 147.17 are removed and reserved.

■ 48. Section 147.21 is revised to read as follows:

§ 147.21 Sanitation procedures.

Sanitation must be maintained in a manner approved by the Administrator. Approved procedures for maintaining sanitation are listed in the NPIP Program Standards, as defined in § 147.51. Sanitation procedures may also be approved by the Administrator in accordance with § 147.53(d)(2).

§§ 147.22 through 147.27 [Removed and Reserved]

■ 49. Sections 147.22 through 147.27 are removed and reserved.

■ 50. Section 147.30 is revised to read as follows:

§ 147.30 Molecular examination procedures.

Molecular examination must be conducted in a manner approved by the Administrator. Approved molecular examination procedures are listed in the NPIP Program Standards, as defined in § 147.51. Molecular examination procedures may also be approved by the Administrator in accordance with § 147.53(d)(1).

§ 147.31 [Removed and Reserved]

■ 51. Section 147.31 is removed and reserved.

■ 52. In § 147.41, a new definition of *NPIP Technical Committee* is added, in alphabetical order, to read as follows:

§ 147.41 Definitions.

* * * * *

NPIP Technical Committee. A committee made up of technical experts on poultry health, biosecurity, surveillance, and diagnostics. The committee consists of representatives from the poultry and egg industries, universities, and State and Federal governments and is appointed by the Senior Coordinator and approved by the General Conference Committee.

* * * * *

§ 147.44 [Amended]

■ 53. In § 147.44, paragraph (b) is amended by removing the citation ''§ 147.43(d)(2)'' and adding the citation ''§ 147.43(d)(4)'' in its place.

■ 54. In part 147, subpart F is revised to read as follows:

Subpart F—Authorized Laboratories and Approved Tests and Sanitation Procedures

Sec.
147.51 Definitions.
147.52 Authorized laboratories.
147.53 Approved tests and sanitation procedures.
147.54 Approval of diagnostic test kits not licensed by the Service.

Subpart F—Authorized Laboratories and Approved Tests and Sanitation Procedures

§ 147.51 Definitions.

Administrator. The Administrator, Animal and Plant Health Inspection Service, or any other employee of the Animal and Plant Health Inspection Service delegated to act in the Administrator's stead.

Animal and Plant Health Inspection Service (APHIS, the Service). The Animal and Plant Health Inspection Service of the U.S. Department of Agriculture.

NPIP or Plan. The National Poultry Improvement Plan.

NPIP Program Standards. A document that contains tests and

sanitation procedures approved by the Administrator under § 147.53 for use under this subchapter. This document may be obtained from the NPIP Web site at *http://www.aphis.usda.gov/animal_health/animal_dis_spec/poultry/* or by writing to the Service at National Poultry Improvement Plan, APHIS, USDA, 1506 Klondike Road, Suite 101, Conyers, GA 30094.

NPIP Technical Committee. A committee made up of technical experts on poultry health, biosecurity, surveillance, and diagnostics. The committee consists of representatives from the poultry and egg industries, universities, and State and Federal governments and is appointed by the Senior Coordinator and approved by the General Conference Committee.

§ 147.52 Authorized laboratories.

These minimum requirements are intended to be the basis on which an authorized laboratory of the Plan can be evaluated to ensure that official Plan assays are performed in accordance with the NPIP Program Standards or other procedures approved by the Administrator in accordance with § 147.53(d)(1) and reported as described in paragraph (f) of this section. A satisfactory evaluation will result in the laboratory being recognized by the NPIP office of the Service as an authorized laboratory qualified to perform the assays provided for in this part.

(a) *Check-test proficiency.* The NPIP will serve as the lead agency for the coordination of available check tests from the National Veterinary Services Laboratories. The authorized laboratory must use a regularly scheduled check test for each assay that it performs.

(b) *Trained technicians.* The testing procedures at the laboratory must be run or overseen by a laboratory technician who has attended and satisfactorily completed Service-approved laboratory workshops for Plan-specific diseases within the past 4 years.

(c) *Laboratory protocol.* Official Plan assays must be performed and reported as described in the NPIP Program Standards or in accordance with other procedures approved by the Administrator in accordance with § 147.53(d)(1). Assays must be performed using control reagents approved by the Plan or the reagent manufacturer.

(d) *State site visit.* The Official State Agency will conduct a site visit and recordkeeping audit annually. This will include, but may not be limited to, review of technician training records, check test proficiency, and test results. The information from the site visit and recordkeeping audit will be made available to the NPIP upon request.

(e) *Service review.* Authorized laboratories will be reviewed by the Service (NPIP staff) every 3 years. The Service's review may include, but will not necessarily be limited to, checking records, laboratory protocol, check-test proficiency, technician training, and peer review.

(f) *Reporting.* (1) A memorandum of understanding or other means shall be used to establish testing and reporting criteria to the Official State Agency, including criteria that provide for reporting H5 and H7 low pathogenic avian influenza directly to the Service.

(2) *Salmonella pullorum* and *Mycoplasma* Plan disease reactors must be reported to the Official State Agency within 48 hours.

(g) *Verification.* Random samples may also be required to be submitted for verification as specified by the Official State Agency.

§ 147.53 Approved tests and sanitation procedures.

(a)(1) All tests that are used to qualify flocks for NPIP classifications must be approved by the Administrator as effective and accurate at determining whether a disease is present in a poultry flock or in the environment.

(2) All sanitation procedures performed as part of qualifying for an NPIP classification must be approved by the Administrator as effective at reducing the risk of incidence of disease in a poultry flock or hatchery.

(b) Tests and sanitation procedures that have been approved by the Administrator may be found in the NPIP Program Standards. In addition, all tests that use veterinary biologics (e.g., antiserum and other products of biological origin) that are licensed or produced by the Service and used as described in the NPIP Program Standards are approved for use in the NPIP.

(c) New tests and sanitation procedures, or changes to existing tests and sanitation procedures, that have been approved by the NPIP in accordance with the process described in subpart E of this part will be approved by the Administrator. NPIP participants may submit new tests and sanitation procedures, or changes to current tests and sanitation procedures, through that process.

(d)(1) Persons who wish to have a test approved by the Administrator as effective and accurate at determining whether a disease is present in a flock or in the environment may apply for approval by submitting the test, along with any supporting information and data, to the National Poultry Improvement Plan, APHIS, USDA, 1506 Klondike Road, Suite 101, Conyers, GA 30094. Upon receipt of such an application, the NPIP Technical Committee will review the test and any supporting information and data supplied with the application. If the NPIP Technical Committee determines the test to be of potential general use, the Administrator will submit the test for consideration by the General Conference Committee of the NPIP in accordance with subpart E of this part, and the Administrator will respond with approval or denial of the test.

(2) Persons who wish to have a sanitation procedure approved by the Administrator as effective at reducing the risk of incidence of disease in a poultry flock or hatchery may apply for approval by submitting the sanitation procedure, along with any supporting information and data, to the National Poultry Improvement Plan, APHIS, USDA, 1506 Klondike Road, Suite 101, Conyers, GA 30094. Upon receipt of such an application, the NPIP Technical Committee will review the sanitation procedure and any supporting information and data supplied with the application. If the NPIP Technical Committee determines the sanitation procedure to be of potential general use, the Administrator will submit the sanitation procedure for consideration by the General Conference Committee of the NPIP in accordance with subpart E of this part, and the Administrator will respond with approval or denial of the test.

(e)(1) When the Administrator approves a new test or sanitation procedure or a change to an existing test or sanitation procedure, APHIS will publish a notice in the **Federal Register** making available the test or sanitation procedure. The notice will also provide for a public comment period.

(2)(i) After the close of the public comment period, APHIS will publish a notice in the **Federal Register** indicating that the test or sanitation procedure will be added to the NPIP Program Standards, or that the NPIP Program Standards will be updated to reflect changes to an existing test or sanitation procedure, if:

(A) No comments were received on the notice;

(B) The comments on the notice supported the action described in the notice; or

(C) The comments on the notice were evaluated but did not change the Administrator's determination that approval of the test or sanitation procedure is appropriate based on the

standards in paragraph (a) of this section.

(ii) If comments indicate that changes should be made to the test or sanitation procedure as it was made available in the initial notice, APHIS will publish a notice in the **Federal Register** indicating that changes were made to the initial test or sanitation procedure.

(iii) Whenever APHIS adds or makes changes to tests or sanitation procedures, APHIS will make available a new version of the NPIP Program Standards that reflects the additions or changes.

(iv) If comments present information that causes the Administrator to determine that approval of the test or sanitation procedure would not be appropriate, APHIS will publish a notice informing the public of this determination after the close of the comment period.

§ 147.54 Approval of diagnostic test kits not licensed by the Service.

Diagnostic test kits that are not licensed by the Service (e.g., bacteriological culturing kits) may be approved through the following procedure:

(a) The sensitivity of the kit will be estimated in at least three authorized laboratories selected by the Service by testing known positive samples, as determined by the official NPIP procedures found in the NPIP Program Standards or through other procedures approved by the Administrator. If certain conditions or interfering substances are known to affect the performance of the kit, appropriate samples will be included so that the magnitude and significance of the effect(s) can be evaluated.

(b) The specificity of the kit will be estimated in at least three authorized laboratories selected by the Service by testing known negative samples, as determined by tests conducted in accordance with the NPIP Program Standards or other procedures approved by the Administrator in accordance with § 147.53(d)(1). If certain conditions or interfering substances are known to affect the performance of the kit, appropriate samples will be included so that the magnitude and significance of the effect(s) can be evaluated.

(c) The kit will be provided to the cooperating laboratories in its final form and include the instructions for use. The cooperating laboratories must perform the assay exactly as stated in the supplied instructions. Each laboratory must test a panel of at least 25 known positive clinical samples supplied by the manufacturer of the test kit. In addition, each laboratory will be asked to test 50 known negative clinical samples obtained from several sources, to provide a representative sampling of the general population. The identity of the samples must be coded so that the cooperating laboratories are blinded to identity and classification. Each sample must be provided in duplicate or triplicate, so that error and repeatability data may be generated.

(d) Cooperating laboratories will submit to the kit manufacturer all raw data regarding the assay response. Each sample tested will be reported as positive or negative, and the official NPIP procedure used to classify the sample must be submitted in addition to the assay response value.

(e) The findings of the cooperating laboratories will be evaluated by the NPIP Technical Committee, and the Technical Committee will make a recommendation regarding whether to approve the test kit to the General Conference Committee. If the Technical Committee recommends approval, the final approval will be granted in accordance with the procedures described in §§ 147.46 and 147.47.

(f) Diagnostic test kits that are not licensed by the Service (e.g., bacteriological culturing kits) and that have been approved for use in the NPIP in accordance with this section are listed in the NPIP Program Standards.

Done in Washington, DC, this 15th day of January 2014.

Kevin Shea,

Administrator, Animal and Plant Health Inspection Service.

[FR Doc. 2014–01036 Filed 1–27–14; 8:45 am]

BILLING CODE 3410–34–P

FEDERAL REGISTER

Vol. 79 Tuesday,

No. 18 January 28, 2014

Part III

Department of Transportation

National Highway Traffic Safety Administration

49 CFR Part 571

Federal Motor Vehicle Safety Standards; Child Restraint Systems, Child Restraint Systems—Side Impact Protection, Incorporation by Reference; Proposed Rule

DEPARTMENT OF TRANSPORTATION

National Highway Traffic Safety Administration

49 CFR Part 571

[Docket No. NHTSA–2014–0012]

RIN 2127–AK95

Federal Motor Vehicle Safety Standards; Child Restraint Systems, Child Restraint Systems—Side Impact Protection, Incorporation by Reference

AGENCY: National Highway Traffic Safety Administration (NHTSA), Department of Transportation (DOT).

ACTION: Notice of proposed rulemaking (NPRM).

SUMMARY: This NPRM proposes to amend Federal Motor Vehicle Safety Standard (FMVSS) No. 213, ''Child restraint systems,'' to adopt side impact performance requirements for all child restraint systems designed to seat children in a weight range that includes weights up to 18 kilograms (kg) (40 pounds (lb)). NHTSA is issuing this NPRM to ensure that child restraints provide a minimum level of protection in side impacts by effectively restraining the child, preventing harmful head contact with an intruding vehicle door or child restraint structure, and by attenuating crash forces to the child's head and chest.

This NPRM is also issued toward fulfillment of a statutory mandate set forth in the ''Moving Ahead for Progress in the 21st Century Act'' (July 6, 2012), directing the Secretary of Transportation to issue a final rule amending FMVSS No. 213 to improve the protection of children seated in child restraint systems during side impacts.

DATES: Comments must be received on or before April 28, 2014.

Proposed compliance date: We propose that the compliance date for the amendments in this rulemaking action would be three years following the date of publication of the final rule in the **Federal Register**. Optional early compliance would be permitted.

ADDRESSES: You may submit comments to the docket number identified in the heading of this document by any of the following methods:

- *Federal eRulemaking Portal:* go to *http://www.regulations.gov*. Follow the online instructions for submitting comments.
- *Mail:* Docket Management Facility, M–30, U.S. Department of Transportation, West Building, Ground Floor, Rm. W12–140, 1200 New Jersey Avenue SE., Washington, DC 20590.
- *Hand Delivery or Courier:* West Building Ground Floor, Room W12–140, 1200 New Jersey Avenue SE., between 9 a.m. and 5 p.m. Eastern Time, Monday through Friday, except Federal holidays.
- *Fax:* (202) 493–2251.

Regardless of how you submit your comments, please mention the docket number of this document.

You may also call the Docket at 202–366–9324.

Instructions: For detailed instructions on submitting comments and additional information on the rulemaking process, see the Public Participation heading of the Supplementary Information section of this document. Note that all comments received will be posted without change to *http://www.regulations.gov,* including any personal information provided.

Privacy Act: Please see the Privacy Act heading under Rulemaking Analyses and Notices.

FOR FURTHER INFORMATION CONTACT: For technical issues, you may call Cristina Echemendia, Office of Crashworthiness Standards, (Telephone: 202–366–6345) (Fax: 202–493–2990). For legal issues, you may call Deirdre Fujita, Office of Chief Counsel (Telephone: 202–366–2992) (Fax: 202–366–3820). Mailing address: National Highway Traffic Safety Administration, U.S. Department of Transportation, 1200 New Jersey Avenue SE., West Building, Washington, DC 20590.

SUPPLEMENTARY INFORMATION:

Table of Contents

I. Executive Summary
II. Statutory Mandate
III. The Existing Standard
IV. Summary of Proposed Amendments
V. Guiding Principles
VI. Potentially Affected Child Restraints
VII. Real World Analysis
VIII. Past NHTSA Efforts
IX. Side Impact Program Developments
a. Side Impact Environment for Children
b. Injury Mechanisms in Side Impact
c. Global Dynamic Side Impact Tests
d. Side Impact Test Dummy
X. Developing NHTSA's Side Impact Test
a. Assessment of Existing Global Efforts
b. Takata Test Procedure
XI. The Proposed Test Procedure
a. Sled Kinematic Parameters
1. Sliding Seat Acceleration Profile (Representing the Struck Vehicle)
2. Door Velocity
3. Sled Buck Angle (Replicating Longitudinal Component of the Direction of Force)
b. Rear Seat Environment Parameters
1. Rear Seat Cushion Stiffness
2. Rear Seat Door Stiffness
3. Rear Seat Environment Geometry
c. Dynamic Validation of the Sled Test
XII. Proposed Dynamic Performance
a. Q3s Dummy
b. CRABI Dummy
c. Energy Absorption and Distribution
XIII. Fleet Testing
a. Q3s Dummy
b. CRABI Dummy
XIV. Countermeasure Assessment
XV. Petition Regarding Deceleration Sled System
XVI. Costs and Benefits
XVII. Effective Date
XVIII. Regulatory Notices and Analyses
XIX. Public Participation

This NPRM proposes to amend FMVSS No. 213, ''Child restraint systems,'' to adopt side impact performance requirements for all child restraint systems designed to seat children in a weight range that includes weights up to 18 kg (40 lb). Frontal and side crashes account for most child occupant fatalities. Standard No. 213 currently requires child restraints to meet a dynamic test simulating a 48.3 kilometers per hour (30 miles per hour) frontal impact. Today's proposal would require an additional test in which such child restraints must protect the child occupant in a dynamic test simulating a full-scale vehicle-to-vehicle side impact.

Child restraints would be tested with a newly-developed instrumented side impact test dummy representing a 3-year-old child, called the Q3s dummy, and with a well-established 12-month-old child test dummy (the Child Restraint Air Bag Interaction (CRABI) dummy). NHTSA is issuing this NPRM to ensure that child restraints provide a minimum level of protection in side impacts by effectively restraining the child, preventing harmful head contact with an intruding vehicle door or child restraint structure, and by attenuating crash forces to the child's head and chest.

This NPRM is also issued toward fulfillment of a statutory mandate set forth in the ''Moving Ahead for Progress in the 21st Century Act'' (July 6, 2012), directing the Secretary of Transportation to issue a final rule amending FMVSS No. 213 to improve the protection of children seated in child restraint systems during side impacts.

I. Executive Summary

Impacts to the side of a vehicle rank almost equal to frontal crashes as a source of occupant fatalities and serious injuries to children ages 0 to 12. Side impacts are especially dangerous when the impact is on the passenger compartment because, unlike a frontal or rear-end crash, there are no substantial, crushable metal structures between the occupant and the impacting vehicle or object. The door collapses into the passenger compartment and the occupants contact the door relatively

quickly after the crash at a high relative velocity.[1]

In a vehicle-to-vehicle side impact crash, the striking vehicle first interacts with the door structure of the struck vehicle and commences crushing the door and intruding laterally into the vehicle compartment. Second, the striking vehicle engages the sill of the struck vehicle and begins to push the struck vehicle away. At this time, the occupant sitting in the vehicle experiences the struck vehicle seat moving away from the impacting vehicle while the door intrudes towards him or her. Next, the occupant interacts with the intruding door, after which the occupant is accelerated away from the door until the occupant reaches the velocity of the struck and striking vehicle.

Passenger vehicles provide protection in vehicle-to-vehicle crashes by meeting FMVSS No. 214, ''Side impact protection.'' FMVSS No. 214 requires passenger vehicles to provide side impact protection in several different side crashes. In a full-scale crash test representing a severe intersection collision between two passenger vehicles, FMVSS No. 214 requires passenger vehicles to protect occupants when the vehicle is struck on either side by a moving deformable barrier (MDB) simulating an impacting vehicle.[2] The FMVSS No. 214 MDB crash test involves an MDB weighing 1,360 kg (3,000 lb), to represent a vehicle which is traveling at 48.3 kilometers per hour (km/h) (30 miles per hour (mph)) striking the side of another vehicle which is traveling at 24 km/h (15 mph).[3] The struck vehicle must limit the potential for injuries to an occupant's head, thorax, and pelvis, as measured by test dummies seated in the front outboard seat and rear outboard seat on the struck side of the vehicle (''near side'' positions).

Today's NPRM proposes a side impact test that simulates the two-vehicle side crash replicated by the FMVSS No. 214 MDB test of a small passenger car. Today's proposal would require all child restraint systems (CRSs) designed to seat children in a weight range that includes weights up to18 kg (40 lb) to meet specific performance criteria in a dynamic sled test that simulates the MDB test (striking vehicle traveling at 48.3 km/h (30 mph) impacting the struck vehicle traveling at 24 km/h (15 mph)). Approximately 92 percent of side crashes involving restrained children are of equivalent or lower crash severity than the FMVSS No. 214 MDB crash test of a small passenger car.[4]

The proposed sled test is the first of its kind in the world for testing child restraints in a sled system that simulates the vehicle acceleration and intruding door of a small passenger car in a side impact (a vehicle-to-vehicle intersection crash). We do not have sufficient data to determine what share of covered crashes involve an intruding door, however door intrusion is a causative factor for moderate and serious injury to children in side impacts. Child restraints would be tested in the side impact sled test with the Q3s instrumented side impact test dummy representing the size and weight of a 3-year-old (3 YO) child, and with the CRABI dummy representing a 12-month-old (12 MO) infant. NHTSA has previously published an NPRM proposing to amend our regulation for anthropomorphic test devices, 49 CFR Part 572, to add specifications for the Q3s (78 FR 69944; November 21, 2013). The CRABI dummy's specifications are incorporated into 49 CFR Part 572, Subpart R.

NHTSA is issuing this NPRM to ensure that subject child restraints provide a minimum level of protection in side impacts. The CRSs would have to effectively restrain the child, prevent harmful head contact with an intruding vehicle door or child restraint structure, and attenuate crash forces to the child's chest. Injury criteria (expressed in terms of a head injury criterion (HIC) and chest deflection) are proposed for the Q3s. These criteria allow a quantitative evaluation of the effectiveness of the CRS to prevent or attenuate head and chest impact with the intruding door. The 12 MO CRABI would be used to measure the containment capability of the CRS (the ability to prevent the dummy's head from making contact with the intruding door of the sled assembly). In addition, CRSs would be required to meet other structural integrity requirements in the sled test that ensure a sound level of performance in side impacts.

We estimate that a final rule resulting from this proposal would reduce 5.2 fatalities and 64 non-fatal injuries (MAIS[5] 1–5) annually (see Table 1 below).[6] The equivalent lives and the monetized benefits were estimated in accordance with guidance issued February 28, 2013 by the Office of the Secretary[7] regarding the treatment of value of a statistical life in regulatory analyses. A final rule resulting from this proposal is estimated to save 18.26 equivalent lives annually. The monetized annual benefits of the proposed rule at 3 and 7 percent discount rates are $182.6 million and $165.7 million, respectively (Table 2). We estimate that the annual cost of this proposed rule would be approximately $3.7 million. The countermeasures may include larger wings and padding with energy absorption characteristics that cost, on average, approximately $0.50 per CRS designed for children in a weight range that includes weights up to 40 lb (both forward-facing and rear-facing) (Table 3 below). The annual net benefits are estimated to be $162.0 million (7 percent discount rate) to $178.9 million (3 percent discount rate) as shown in Table 4. Because the proposed rule is cost beneficial just by comparing costs to monetized economic benefits, and there is a net benefit, we are not providing a net cost per equivalent life saved since no value would be provided by such an estimate.

[1] Kahane, November 1982, NHTSA Report No. DOT HS 806 314.

[2] FMVSS No. 214 also specifies a static laboratory test that has greatly improved side door strength and protection against side impacts with fixed objects. The static test has resulted in manufacturers reinforcing side doors with a horizontal beam. In addition, FMVSS No. 214 specifies a full-scale side crash test of a vehicle into a pole, which has resulted in the installation of side air bags to protect against head and chest injuries.

[3] In the FMVSS No. 214 test, only the striking ''vehicle,'' represented by the MDB, is moving. Using vector analysis, the agency combined the impact speed and impact angle data in crash files to determine that the dynamics and forces of a crash in which a vehicle traveling at 48.3 km/h (30 mph) perpendicularly strikes the side of a vehicle traveling at 24 km/h (15 mph) could be represented by a test configuration in which: The test vehicle is stationary; the longitudinal centerline of the MDB is perpendicular to the longitudinal centerline of the test vehicle; the front and rear wheels of the MDB are crabbed at an angle of 27 degrees to the right of its longitudinal centerline in a left side impact and to the left of that centerline in a right side impact; and the MDB moves at that angle and at a speed of 54 km/h (33.5 mph) into the side of the struck vehicle.

[4] Obtained from an analysis of the National Automotive Sampling System—Crashworthiness Data System (NASS–CDS) data files for the years 1995–2009 for restrained children 0 to 12 YO in all restraint environments including seat belts and CRS. Details of the analysis are provided in the technical report in the docket for this NPRM.

[5] MAIS (Maximum Abbreviated Injury Scale) represents the maximum injury severity of an occupant based on the Abbreviated Injury Scale (AIS). AIS ranks individual injuries by body region on a scale of 1 to 6: 1 = minor, 2 = moderate, 3 = serious, 4 = severe, 5 = critical, and 6 = maximum (untreatable). MAIS 3+ injuries represent MAIS injuries at an AIS level of 3, 4, 5, or 6.

[6] NHTSA has developed a Preliminary Regulatory Impact Analysis (PRIA) that discusses issues relating to the potential costs, benefits, and other impacts of this regulatory action. The PRIA is available in the docket for this NPRM and may be obtained by downloading it or by contacting Docket Management at the address or telephone number provided at the beginning of this document.

[7] *http://www.dot.gov/sites/dot.dev/files/docs/VSL%20Guidance%202013.pdf.*

TABLE 1—ESTIMATED BENEFITS

Fatalities	5.2
Non-fatal injuries (MAIS 1 to 5)	64

TABLE 2 ESTIMATED MONETIZED BENEFITS

[In millions of 2010 dollars]

	Economic benefits	Value of statistical life	Total benefits
3 Percent Discount Rate	$16.0	$166.6	$182.6
7 Percent Discount Rate	14.4	151.3	165.7

TABLE 3—ESTIMATED COSTS (2010 ECONOMICS)

Average cost per CRS designed for children in a weight range that includes weights up to 40 lb.	$0.50
Total annual cost	3.7 million

TABLE 4—ANNUALIZED COSTS AND BENEFITS

[In millions of 2010 dollars]

	Annualized costs	Annualized benefits	Net benefits
3% Discount Rate	$3.7	$182.6	$178.9
7% Discount Rate	3.7	165.7	162.0

Accident data indicate that CRSs designed for children in a weight range that includes weights up to 18 kg (40 lb) are generally already remarkably effective in reducing the risk of death and serious injury in side impacts. We have observed in recent years that increasing numbers of these CRSs appear to have more side structure coverage (CRS side ''wings'') and side padding than before.[8] Because the design of the side wings and stiffness of the padding are factors that affect the containment of the child dummy and the injury measures, we consider the side wing coverage and increased padding to be overall positive developments. Yet, because FMVSS No. 213 currently does not have a side impact test, a quantifiable assessment of the protective qualities of the features was heretofore not possible. Today's NPRM would establish performance requirements that ensure that the wings, padding, padding-like features, or other countermeasures employed in recent years reportedly to provide protection in side impacts will in fact achieve a minimum level of performance that will reduce the risk of injury or fatality in side impacts. For CRS designs that have not yet incorporated side impact protection features, today's NPRM is the first step toward ensuring that they will.

II. Statutory Mandate

On July 6, 2012, President Obama signed the ''Moving Ahead for Progress in the 21st Century Act'' (MAP–21), P.L. 112–141. Subtitle E of MAP–21, entitled ''Child Safety Standards,'' includes section 31501(a) which states that, not later than 2 years after the date of enactment of the Act, the Secretary shall issue a final rule amending Federal Motor Vehicle Safety Standard Number 213 to improve the protection of children seated in child restraint systems during side impact crashes.[9]

We interpret this provision of MAP–21 as providing us a fair amount of discretion. NHTSA informed Congress in 2004 that enhanced side impact protection for children in child restraints was a priority for NHTSA.[10] The agency informed Congress that it will continue efforts to obtain detailed side crash data to identify specific injury mechanisms involving children and will work on countermeasure development using test dummies, including the European Q3 dummy then available, for improved side impact protection. Our current NHTSA Vehicle Safety and Fuel Economy Rulemaking and Research Priority Plan 2011–2013, March 2011,[11] announced our intention to issue an NPRM in 2012 on child restraint side impact protection. The plan shows that we were planning to ''[p]ropose test procedures in FMVSS No. 213 to assess child restraint performance in near-side impacts. Amend Part 572 to add the Q3s dummy, the 3-year-old side impact version of the Q-series of child dummies.''

We believe that MAP–21's short deadline for issuance of a final rule indicates that Congress intended for NHTSA to use the existing state of knowledge gained from our research efforts to initiate and complete the regulation as the agency had planned. There are no child test dummies other than the Q3s available at this time that have been proven sufficiently durable

[8] SafetyBeltSafe U.S.A. *http://www.carseat.org/Pictorial/InfantPict,1-11.pdf* and *http://www.carseat.org/Pictorial/3-Five-%20Point-np.pdf*. Last accessed January 24, 2013.

[9] Subtitle E also includes provisions for commencing a rulemaking to amend the standard seat assembly specifications in FMVSS No. 213 to better simulate a single representative motor vehicle rear seat (section 31501(b)), and initiating a rulemaking to amend FMVSS No. 225, ''Child restraint anchorage systems,'' to improve the ease of use of lower anchorages and tethers (section 31502(a)). The agency anticipates dealing with these provisions in future rulemakings.

[10] NHTSA Report to Congress, ''Child Restraint Systems, Transportation Recall Enhancement, Accountability, and Documentation Act,'' February 2004. *www.nhtsa.gov/nhtsa/announce/NHTSAReports/TREAD.pdf*.

[11] Docket No. NHTSA–2009–0108–0032.

and reliable for use in the proposed FMVSS No. 213 side impact testing. The level and amount of effort needed to further develop and validate a different test procedure, or new child side impact test dummies, far exceeds what could be accomplished within the time constraints of the Act.

Further, MAP–21 requires a final rule amending FMVSS No. 213, which means that the rulemaking must be conducted in accordance with the National Traffic and Motor Vehicle Safety Act (49 U.S.C. 30101 *et seq.*) (''Vehicle Safety Act''). Under the Vehicle Safety Act, the Secretary of Transportation is authorized to prescribe Federal motor vehicle safety standards that are practicable, meet the need for motor vehicle safety, and are stated in objective terms.[12] ''Motor vehicle safety'' is defined in the Vehicle Safety Act as ''the performance of a motor vehicle or motor vehicle equipment in a way that protects the public against unreasonable risk of accidents occurring because of the design, construction, or performance of a motor vehicle, and against unreasonable risk of death or injury in an accident, and includes nonoperational safety of a motor vehicle.'' [13] When prescribing such standards, the Secretary must consider all relevant, available motor vehicle safety information, and consider whether a standard is reasonable, practicable, and appropriate for the types of motor vehicles or motor vehicle equipment for which it is prescribed.[14] The Secretary must also consider the extent to which the standard will further the statutory purpose of reducing traffic accidents and associated deaths.[15]

We have developed a regulation that will improve the protection of children seated in child restraint systems during side impacts, in accordance with MAP–21, while meeting the criteria of section 30111 of the Vehicle Safety Act. We believe that the proposed regulation meets the need for safety, is stated in objective terms, and is reasonable, practicable, and appropriate. While the language of section 31501(a) of MAP–21 is broad enough to encompass a large universe of child restraint systems, there are technical and practical reasons for applying the dynamic side impact test only to CRSs designed to seat children in a weight range that includes weights up to 18 kg (40 lb). For one, there is no side impact dummy representative of children larger than those represented by the Q3s that can reasonably be used to test CRSs for children above 18 kg (40 lb) to the dynamic side impact requirements proposed today. Without an appropriate test dummy, the data from a dynamic test would not provide a meaningful assessment of the performance of the CRS in protecting children of weights above 18 kg (40 lb). In addition, the seated height of children weighing more than 18 kg (40 lb) who are restrained in child restraints is typically sufficient to take advantage of the vehicle's side impact protection systems, such as side curtain air bags. Thus, the safety need for Standard No. 213's dynamic side impact requirements is attenuated for these CRSs. These reasons are further discussed in a section below, and are presented for public comment.

III. The Existing Standard

CRSs are highly effective in reducing the likelihood of death or serious injury in motor vehicle crashes. NHTSA estimates that for children less than 1 year old, a child restraint can reduce the risk of fatality by 71 percent when used in a passenger car and by 58 percent when used in a pickup truck, van, or sport utility vehicle (light truck).[16] Child restraint effectiveness for children between the ages 1 to 4 YO is 54 percent in passenger cars and 59 percent in light trucks. *Id.*

The most significant dynamic performance requirements of FMVSS No. 213 relevant to this NPRM are briefly described below.[17]

l. The crash performance of a CRS is evaluated in a frontal dynamic test involving a 48.3 km/h (30 mph) velocity change, which is representative of a severe crash. CRSs are tested while attached to a standardized seat assembly representative of a passenger vehicle seat. CRSs other than booster seats must meet minimum performance requirements when anchored to the standard seat assembly with a lap belt only, or with the lower anchorages of the ''LATCH'' [18] system. The CRSs must meet more stringent head excursion requirements in another test, one in which a top tether, if provided, is permitted to be attached. Belt-positioning (booster) seats are tested on the standard seat assembly using a lap and shoulder belt.[19]

2. CRSs are dynamically tested with anthropomorphic test devices (ATDs) (child test dummies) representative of the children for whom the CRS is recommended. FMVSS No. 213 specifies the use of ATDs representing a newborn, a 12 MO infant, a 3 YO, a 6 YO, a weighted 6 YO, and a 10 YO.[20] Except for the newborn and weighted 6 YO ATDs, the test dummies are equipped with instrumentation measuring crash forces imposed on the ATD. The mass, size, and kinematics of the ATDs are designed to replicate those of a human child.

3. To protect the child, FMVSS No. 213 requires CRSs to limit the amount of force that can be exerted on the head and chest of the ATD during the dynamic test. FMVSS No. 213 also requires CRSs to meet head excursion limits to reduce the possibility of head injury from contact with vehicle interior surfaces and ejection, and limits knee excursion.

4. FMVSS No. 213 requires CRSs to maintain system integrity (i.e., not fracture or separate in such a way as to harm a child). The standard also specifies requirements for the size and shape of contactable surfaces of the CRS to ensure that surfaces that can harm on impact are absent, and specifies requirements for the performance of belts and buckles to make sure that, among other things, a buckle can be swiftly unlatched after a crash by an adult for expeditious egress from the crash site but cannot be easily unbuckled by an unsupervised child.

[12] 49 U.S.C. 30111(a).

[13] 49 U.S.C. 30102(a)(8).

[14] 49 U.S.C. 30111(b).

[15] *Id.*

[16] ''Revised Estimates of Child Restraint Effectiveness,'' Research Note, National Center for Statistics and Analysis (NCSA) of the National Highway Traffic Safety Administration (NHTSA), DOT HS 96855, December 1996, *http://www-nrd.nhtsa.dot.gov/Pubs/96855.pdf,* last accessed on May 2, 2012.

[17] FMVSS No. 213 also has labeling and owner's manual requirements for proper use of the CRS, including requirements that safety warnings be prominently displayed on the CRS. The standard also includes requirements for the flammability resistance of the CRS. The standard also establishes an owner-registration program so that purchasers can register with the manufacturer and be directly notified in the event of a safety recall.

[18] LATCH refers to *L*ower *A*nchors and *T*ethers for *Ch*ildren, an acronym developed by manufacturers and retailers to refer to the child restraint anchorage system required by FMVSS No. 225 for installation in motor vehicles. LATCH consists of two lower anchorages, and one upper tether anchorage. Each lower anchorage includes a rigid round rod or ''bar'' onto which a hook, a jaw-like buckle or other connector can be snapped. The bars are located at the intersection of the vehicle seat cushion and seat back. The upper tether anchorage is a ring-like object to which the upper tether of a child restraint system can be attached. FMVSS No. 213 requires CRSs to be equipped with attachments that enable the CRS to attach to the vehicle's LATCH system.

[19] Built-in CRSs are evaluated by crash testing the vehicle into which the CRSs are built, or by simulating a crash with the built-in seat dynamically tested with parts of the vehicle surrounding it.

[20] NHTSA will use the 10 YO child dummy in compliance testing to test CRSs manufactured on or after February 27, 2014.

IV. Summary of Proposed Amendments

This NPRM proposes to amend FMVSS No. 213 to adopt side impact performance requirements for CRSs designed to seat children in a weight range that includes weights up to 18 kg (40 lb). The side impact test requirements would be specified in a new standard, FMVSS No. ''213a.'' FMVSS No. 213 would be amended to include a requirement that the CRSs covered by this NPRM must meet the new FMVSS No. 213a in addition to the requirements established in FMVSS No. 213.[21]

The most significant amendments proposed by this NPRM are described below.

1. A dynamic (sled) test would be used to evaluate the performance of the CRS in a side impact. The sled test was developed based on an acceleration sled system[22] developed by Takata. The test procedure simulates the two-vehicle side crash replicated in the MDB test of FMVSS No. 214 (striking vehicle traveling at 48.3 km/h (30 mph)) impacting the struck vehicle traveling at 24 km/h (15 mph). The proposed sled test simulates a near-side side impact of a small passenger car. It simulates the velocity of the striking vehicle, the struck vehicle, and an intruding door.

2. The test buck consists of a sliding ''vehicle'' seat (representative of a rear seat designated seating position) mounted to a rail system along with a ''side door'' structure rigidly mounted to the sled buck structure. The sliding ''vehicle'' seat and side door are representative of today's passenger vehicles. This ''side impact seat assembly'' (SISA) proposed for the side impact test is specified by drawings that have been placed in the docket for today's NPRM. The sliding vehicle seat is positioned sufficiently away from the side door to allow the sled to reach a desired velocity (31.3 km/h) prior to the time the sliding ''vehicle'' seat starts to accelerate to a specific acceleration profile.

3. Most CRSs would be attached using LATCH to the sliding ''vehicle'' seat of the SISA. CRSs covered by this NPRM that are not currently required by FMVSS No. 213 to have LATCH attachments (i.e., belt-positioning seats) would be tested using a lap and shoulder belt on the SISA. The center of the CRS is positioned 300 mm from the edge of the sliding seat next to the intruding door (simulating a near-side position). At the time the sliding seat starts to accelerate, the armrest on the door is located 32 mm from the edge of the seat towards the child restraint system. For forward-facing CRSs with LATCH attachments, the LATCH lower anchorages and the top tether, if provided, would be used (assuming the top tether is recommended for use in motor vehicles by the CRS manufacturer).

4. CRSs recommended for children with weights that include 10 kg to 18 kg (22 lb to 40 lb) would be tested on the SISA with an ATD representing a 3 YO child, referred to as the ''Q3s.'' The Q3s is a side impact version of the 3 YO child Q-series dummy (Q3), a frontal crash dummy developed in Europe. CRSs recommended to seat children with weights up to 10 kg (22 lb) would be tested with the 12 MO CRABI dummy (49 CFR Part 572, Subpart R).

5. Injury criteria (expressed in terms of HIC_{15}[23] and chest deflection) are proposed for the Q3s. These criteria allow a quantitative evaluation of the effectiveness of the CRS, and the ability of the CRS to prevent or attenuate head and chest impact with the intruding door. The CRABI would be used to measure the containment capability (the ability to prevent the ATD's head from contacting the intruding door of the SISA) of CRSs recommended for children weighing more than 5 kg (11 lb) and up to 10 kg (22 lb). In addition, CRSs would be required to meet structural integrity and other requirements described in item 4 of the previous section.

V. Guiding Principles

The following principles guided our decision-making in developing this NPRM. Several of these principles have guided our past rulemakings on FMVSS No. 213.

a. NHTSA estimates that CRSs are already 42 percent effective in preventing death in side crashes of 0 to 3 YO children.[24] This estimated degree of effectiveness is high, and is only 11 percentage points lower than CRS effectiveness in frontal crashes (53 percent), notwithstanding that FMVSS No. 213 requires CRSs to meet specific performance requirements in a frontal impact sled test but has no such dynamic performance requirements in side impact. We believe that the effectiveness of CRSs in side impact can be attributed to the CRS harness containing the child in the seating position, thereby mitigating harmful contact with interior vehicle components, and to the CRS structure shielding the child from direct impact and absorbing some of the crash forces.

b. In making regulatory decisions on possible enhancements to CRS performance, the agency must bear in mind the consumer acceptance of cost increases to an already highly-effective item of safety equipment. Any enhancement that would significantly raise the price of the restraints could potentially have an adverse effect on the sales of this voluntarily-purchased equipment. The net effect on safety could be negative if the effect of sales losses exceeds the benefit of the improved performance of the restraints that are purchased. Thus, to maximize the total safety benefits of its efforts on FMVSS No. 213, the agency must balance those improvements against impacts on the price of restraints. In addition, NHTSA must also consider the effects of improved performance on the ease of using child restraints. If the use of child restraints becomes overly complex or unwieldy, the twin problems of misuse and nonuse of child restraints could be exacerbated.

c. Estimating the net effect on safety of this rulemaking, consistent with the principles for regulatory decision-making set forth in Executive Order (E.O.) 12286, ''Regulatory Planning and Review,'' and E.O. 13563, ''Improving Regulation and Regulatory Review,'' was limited by several factors. One was that data are sparse on side crashes resulting in severe injuries or fatalities to children in CRSs. Data indicate that side crashes resulting in fatalities to children in CRSs mainly occur in very severe, un-survivable side impact conditions. A dynamic test involving a very high test speed or intrusion level may have undesirable impacts on FMVSS No. 213 regarding practicability, cost, and possible detrimental effects on safety (i.e., the possible effects on the use of CRSs, discussed above).

[21] A final rule could incorporate the proposed requirements into FMVSS No. 213, rather than in a separate FMVSS No. 213a. This NPRM shows the proposed requirements separately in FMVSS No. 213a for plain language purposes and the reader's convenience.

[22] An acceleration sled is accelerated from rest to a prescribed acceleration profile to simulate the occupant compartment deceleration in a crash event. In comparison, a ''deceleration sled'' is first accelerated to a target velocity and then is decelerated to a prescribed deceleration profile to simulate the same event.

[23] Head injury criterion that is based on the integration of resultant head acceleration over a 15 millisecond duration.

[24] NHTSA conducted an analysis of the Fatality Analysis Reporting System (FARS) data files of real world fatal non-rollover frontal and side crashes of passenger cars and light trucks and vans involving children for the years 1995 to 2009. From this analysis, the agency estimated the effectiveness of CRSs in preventing fatalities among 0 to 3 YO children to be 42 percent in side crashes and 52 percent in frontal crashes. The analysis method is similar to that reported in the NCSA Research Note, ''Revised Estimates of Child Restraint Effectiveness,'' DOT HS 96855 and is also detailed in the technical report in the docket.

Another limiting factor was there is no information comparing the real world performance of ''good'' performing CRSs versus ''poor'' performing CRSs. Without these data, we had to use test data and injury curves to determine the effectiveness of possible countermeasures (e.g., large side wings with energy absorbing padding). We are also limited by the unavailability of child ATDs for side impact testing. Currently, there is only an ATD representing a 3 YO child that has been specially developed for side impacts. The 12 MO CRABI dummy is a frontal impact dummy, and can only be used in a limited capacity to estimate benefits in this side impact rulemaking.

d. In developing this NPRM, we sought to build on the levels of side impact protection provided by FMVSS No. 214. The sled test proposed today is based on the FMVSS No. 214 MDB test of a small passenger car, replicating the real-world side crashes that occur most frequently today. The proposed sled test set-up is representative of the side impact environment in which a CRS would be used in today's vehicles. The environment is based on the rear seat and side door of vehicles meeting FMVSS No. 214. Children seated in the rear seat are benefitting from FMVSS No. 214's requirements: Side door beams and door and sill structure reinforcements prevent intrusion and enable the vehicle to better manage the crash energy.[25]

Yet, due to their size and fragility, infants and toddlers are dependent on child restraint systems to augment FMVSS No. 214 protection, and to manage the side crash energy further. In developing this NPRM, our objectives were to ensure that CRSs provide a minimum level of protection in side impacts by effectively restraining the child, preventing harmful head contact with an intruding vehicle door or CRS structure, and by attenuating crashes forces to the child's chest.

e. This rulemaking is issued in furtherance of MAP–21. MAP–21 requires a final rule amending FMVSS No. 213 to improve the protection of children seated in child restraint systems during side impact crashes.

VI. Potentially Affected Child Restraints

Consistent with the principles discussed above, we propose to apply the side impact test requirements to all CRSs designed to seat children in a weight range that includes weights up to 18 kg (40 lb). Children in the 0 to 18 kg (40 lb) group (which encompasses children from birth to about 4 YO) have a high rate of child restraint use (<1 YO = 98 percent and 1 to 3 YO[26] = 93 percent according to the 2009 National Survey of the Use of Booster Seats (NSUBS)[27]), which provides a good opportunity for improving CRS performance and reducing injuries and fatalities through a side impact regulation.[28]

We believe that focusing at this time on the 0 to 18 kg (40 lb) (0 to 4 YO) age group is highly appropriate for several reasons. Real-world data show that head injuries are the most common injuries in a side impact environment. According to McCray,[29] head injuries in children 1 to 3 YO are slightly higher than for overall children 0 to12 years of age. Possible countermeasures available to CRS manufacturers to reduce the risk of head injury are the addition of padding or larger side ''wing'' structures to keep the child's head contained and to reduce the severity of the impact. It appears from our testing that energy-absorbing padding added to the CRS around the head area of the child and to the side structures (CRS side ''wings'') would enable forward- and rear-facing CRSs to meet the proposed requirements without adding any additional structures to the seats.

Focusing on children weighing up to 18 kg (40 lb) (0 to 4 YO age group) also appropriately reflects the near-side impact environment in which CRSs will be used. Our test results indicated that an important factor in the near side impact environment is the position of the child's head with respect to the ''beltline'' (also referred to as the window sill)[30] of the vehicle door. The sitting height of older children restrained in CRSs typically positions the head high enough above the beltline to benefit from the vehicle's FMVSS No. 214 side impact safety features, such as side window curtain air bags. The need for a side impact requirement in FMVSS No. 213 may be lessened for those children. However, when the child's head is below the beltline, as likely with children weighing up to 18 kg (40 lb) (0 to 4 YO) in CRSs, there is greater need for FMVSS No. 213 side impact protection, as less benefit is attained from the vehicle countermeasures.

Importantly also, due to the absence of an array of side impact child test dummies, we believe that focusing this NPRM on CRSs designed for children in a weight range that includes weights up to 18 kg (40 lb) best accords with Vehicle Safety Act requirements, which, among other factors, require each FMVSS to be ''appropriate for the types of motor vehicle equipment for which it is prescribed.''[31] In FMVSS No. 213's frontal crash program, a 3 YO child dummy (weighing 16.3 kg (36 lb)) is considered representative of children weighing 10 kg to 18 kg (22 to 40 lb), and is used to test CRSs recommended for children weighing 10 kg to 18 kg (22 to 40 lb). Similarly, we believe that the Q3s 3 YO side impact test dummy (weighing 14.5 kg (32 lb)) would be an appropriate test dummy to evaluate CRSs designed for children weighing 10 kg to 18 kg (22 lb to 40 lb).

On the other hand, currently, the 3 YO child dummy used in the frontal crash program is not used to test CRSs with regard to performance in restraining children weighing more than 18 kg (40 lb). This is because the 3 YO test dummy is not considered representative of children for whom the CRS is recommended. Similarly, we believe that the Q3s, which has only been made available recently, would not be a suitable dummy to test the performance of CRSs with respect to children weighing more than 18 kg (40 lb). The Q3s would not be representative of children for whom the CRS is recommended, and test data obtained by use of the ATD would not likely be meaningful as to the performance of the CRS in restraining

[25] Side curtain air bags installed pursuant to FMVSS No. 214's pole test will provide head protection to children who sit high enough (whether in a CRS or directly on the vehicle seat) to experience head-to-curtain interaction in a side crash.

[26] Note that in survey data a child who is 1 day shy of his or her 4th birth day is still considered a 3 YO. Therefore survey data representing 1 to 3 YO children include 3 YO children who are nearly 4 YO and at the 40 lb weight limit representing the weight of a 75th percentile 4 YO child or an average 5 YO child.

[27] Pikrell, T.M., Ye, T. Report Number DOT HS 811 377. September 2010. NSUBS is a probability-based nationwide child restraint use survey conducted by NHTSA's National Center for Statistics and Analysis (NCSA).

[28] Children between 4 and 12 YO have lower child restraint use (4 to 7 YO = 55 percent and 8 to 12 YO = 6 percent). Data show that 43 percent of 4 to 7 YO and 78 percent of 8 to 12 YO children use seat belts.

[29] McCray, L., Scarboro, M., Brewer, J. ''Injuries to children one to three years old in side impact crashes,'' 20th International Conference on the Enhanced Safety of Vehicles, 2007. Paper Number 07–0186.

[30] The beltline of a vehicle is a term used in vehicle design and styling, referring to the nominally horizontal line below the side glazing of a vehicle, which separates the glazing area from the lower body. Passenger vehicles are required to provide head protection in side impacts and ejection mitigation in rollovers, pursuant to FMVSS No. 214 and FMVSS No. 226, ''Ejection mitigation,'' respectively. The countermeasure provided to meet FMVSS No. 226, usually a side curtain air bag, must meet performance requirements that, in effect, will necessitate coverage of the side windows to the beltline of the vehicle.

[31] 49 U.S.C. 30111(b).

children weighing more than 18 kg (40 lb).

We request comments on the merits of amending FMVSS No. 213 at this time to improve the protection of children weighing over 18 kg (40 lb), assessing performance of the CRSs with the Q3s or by other means. We also seek comments on whether belt-positioning (booster) seats recommended for older children have design limitations that might impede their ability to meet the proposed requirements. We have noticed that some belt-positioning seats for older children are advertised as providing side impact protection. We ask manufacturers to provide us information on the methods they use to demonstrate that their side impact design features for belt-positioning seats do in fact improve protection in side impacts.

There are a number of different types of child restraints designed for children in a weight range that includes weights up to 18 kg (40 lb). With regard to belt-positioning (booster) seats recommended for children weighing up to 18 kg (40 lb),[32] we propose testing the seats with the Q3s.[33] The SISA would be equipped with Type II (lap and shoulder) belts to test the belt-positioning boosters. Belt-positioning (booster) seats sold for children in a weight range that includes weights up to 18 kg (40 lb) might have to improve some side wing structures, but we tentatively believe that the trade-off in possible increased size of side wing structures and padding and cost of these belt-positioning seats versus improved side impact protection is worthwhile for protection of this young child group (children weighing up to 18 kg (40 lb) (0 to 4 YO age group)). This approach of testing all CRSs designed to seat children in a weight range that includes weights up to 18 kg (40 lb), including belt-positioning seats, accords with MAP–21.

On the other hand, we believe that the proposed requirements should not apply to harnesses. FMVSS No. 213 defines a harness as ''a combination pelvic and upper torso child restraint system that consists primarily of flexible material, such as straps, webbing or similar material, and that does not include a rigid seating structure of the child.'' NHTSA tentatively believes that harnesses should be excluded because of practicability concerns about the ability of the harness to meet the proposed requirements and because harnesses serve a need in certain populations. Harnesses would likely not be able to meet the proposed performance requirements because they do not have a side structure that can be reinforced and/or padded to mitigate forces on the Q3s in the side test. At the same time, we recognize that there is a niche served by harnesses on certain school buses and special needs buses, one whose needs cannot be met by any other type of CRS. In addition, the side impact crash environment of a school bus is significantly different from that simulated by the proposed sled test procedure (which simulates a near-side impact of a small passenger car). Accordingly, we propose excluding harnesses from the proposed side impact requirements.

Car beds would also be excluded from the proposed requirements. Car beds do not ''seat'' children but instead restrain or position a child in a supine or prone position on a continuous flat surface. FMVSS No. 213 requires manufacturers of car beds to provide instructions stating that the car bed should be positioned in the vehicle such that the child's head is near the center of the vehicle. We believe that, due to the supine position and location of the head of the child, the risk of injury and the injury patterns of children in car beds are much different from those of children seated forward- or rear-facing. There is no accident data available that show that benefits would accrue from applying the proposed side impact protection standard to car beds.

VII. Real World Analysis

The motor vehicle occupant fatality rate among children 4 YO and younger has declined from 4.5 in 1975 to 1.54 in 2009 (per 100,000 occupants). This decline in fatality rate is partially attributed to increased use of child restraint systems. The 2009 NSUBS found that most (92 percent) children 0 to 7 YO were riding in the rear seats of vehicles and were restrained in CRSs (98 percent of 0 to 1 YO children, 93 percent of 1 to 3 YO children, and 55 percent of 4 to 7 YO children).[34]

According to the 2009 FARS data files, there were 33,808 persons killed in motor vehicle crashes in 2009, 322 of whom were children aged 4 and younger killed in passenger vehicle crashes. Among the 322 child occupant fatalities, 92 (29 percent) were unrestrained, 27 (8 percent) were restrained by vehicle seat belts, 178 (55 percent) were restrained in CRSs, and 25 (8 percent) had unknown restraint use.[35]

In 1996, the agency estimated the effectiveness of CRSs and found the devices to reduce fatalities by 71 percent for children younger than 1 YO and by 54 percent for toddlers 1 to 4 YO in passenger vehicles.[36] For today's NPRM, the agency updated the 1996 effectiveness estimates by conducting a similar analysis using the FARS data files for the years 1995–2009.[37] In the updated analysis,[38] only non-rollover frontal and side crashes of passenger cars and LTVs were considered. (CRS effectiveness was estimated for each crash mode. Due to small sample size of unrestrained children less than 1 YO, the 0 to 1 YO age group was combined with the 1 to 3 YO age group for determining CRS effectiveness for each crash mode.) The results indicate that in non-rollover frontal crashes, CRSs currently in use are 53 percent effective in preventing fatalities among children 0 to 3 YO and 43 percent effective among children 4 to 7 YO. In non-rollover side crashes, CRSs currently in use are 42 percent effective in preventing fatalities among 0 to 3 YO and 51 percent effective among 4 to 7 YO children.

The agency estimates that the lives of 284 children 4 YO and younger were saved in 2009 due to the use of child restraint systems. At 100 percent use of child restraint systems for children 0 to 4 YO, an estimated 372 lives would have been saved in 2009.[39] This estimate accounts for consumers' real-world use of child restraints, i.e., these lives would be saved even when the CRSs are misused.

Failure to use proper occupant restraints is a significant factor in a large number of child occupant fatalities resulting from motor vehicle crashes. In

[32] Currently, FMVSS No. 213 prohibits manufacturers from recommending belt-positioning seats for children weighing less than 13.6 kg (30 lb).

[33] This discussion also applies to convertible or front-facing child restraint systems that are equipped with an internal harness, that are also sold for use as a belt-positioning booster once the child reaches a certain weight or height (the consumer is instructed to remove the harness when using the CRS as a belt-positioning seat). Under this NPRM, a CRS that is marketed for use as a belt-positioning seat for children in a weight range that includes children weighing less than 18 kg (40 lb) would be tested in the belt-positioning ''mode'' to the side impact requirements.

[34] Tony Jianquiang Ye and Timothy Pickrell, NHTSA, DOT HS 811 377, September 2010.

[35] Children, Traffic Safety Facts—2009 data, DOT HS 811 387, NHTSA, *http://www-nrd.nhtsa.dot.gov/pubs/811387.pdf,* last accessed August 9, 2012.

[36] ''Revised Estimates of Child Restraint Effectiveness,'' Research Note, supra.

[37] Details of the analysis method are provided in the supporting technical document in the docket for this NPRM.

[38] Details of the updated analysis are provided in the supporting technical document in the docket for this NPRM.

[39] Tony Jianquiang Ye and Timothy Pickrell, Child Restraint use in 2009—Overall Results, NHTSA, DOT HS 811 377, September 2010.

addition, fatalities among children properly restrained in child restraints are often attributed to the severity of the crash. Sherwood [40] examined the FARS database for the year 2000 and determined that there were 621 child occupant fatalities in the age range of 0 to 5 years. Among these 621 fatalities, 143 (23 percent) children were reported to be in child restraints. Detailed police reports were available for 92 of the 143 fatally injured children restrained in CRSs. Sherwood examined these 92 police reports and determined that half of the 92 fatalities were in un-survivable crashes, 12 percent of the fatalities were judged to result from gross misuse of child restraints, 16 percent in non-catastrophic side impacts, and 13 percent in non-catastrophic frontal impacts. Sherwood noted that side impacts accounted for the largest number of fatalities (40 percent), and in all side impact crashes involving child fatalities, there was vehicle intrusion at the child's seating position.

In-Depth Study of Fatalities Among Child Occupants

The agency further examined the real world crash databases managed by the agency (FARS and the National Automotive Sampling System-Crashworthiness Data System (NASS–CDS)) for the years 2005–2009 to better understand fatalities to children restrained in child restraints when involved in side crashes.

First, we categorized the crash cases involving children (0 to 12 YO) seated in rear seating positions, by restraint use, crash type, and child age. See Tables 5 and 6, below.

TABLE 5—AVERAGE ANNUAL CRASH FATALITIES AMONG CHILDREN 0 TO 12 YO IN REAR SEATING POSITIONS OF LIGHT PASSENGER VEHICLES CATEGORIZED BY RESTRAINT TYPE AND AGE

[FARS 2005–2009]

Restraint	Age (years)				Total
	Under 1	1–3	4–7	8–12	
None	13.4	39.8	68	91.6	212.8
Adult Belt	1.8	11.6	57.4	78.2	149
CRS	55.8	106	54.2	4.4	220.4
Unknown	2.8	6.6	12.8	14.6	36.8
Total	73.8	164	192.4	188.6	619

Annually, there were 619 crash fatalities among children 0 to 12 YO seated in rear seating positions of light vehicles. Among these fatalities, 220 (36 percent) were to children restrained in CRSs (162 were 0 to 3 YO and 58 were 4 to 12 YO). Nearly three-quarters of the CRS restrained child fatalities were to children 0 to 3 YO.

As shown in the last column of Table 6, among the 220 fatalities of children 0 to 12 YO restrained in rear seats of light passenger vehicles and in CRSs, approximately 32 percent occurred in frontal crashes, 31 percent in side crashes, 25 percent in rollovers, and 11 percent in rear crashes. Approximately 60 percent of side impact fatalities (41/68.4) were in near-side impacts. (''Far-side'' position means the outboard seating position on the opposite side of the point of impact.)

TABLE 6—AVERAGE ANNUAL CRASH FATALITIES AMONG CHILDREN 0 TO 12 YO IN REAR SEATING POSITIONS OF LIGHT PASSENGER VEHICLES AND RESTRAINED IN CRSS BY CRASH MODE AND AGE

[FARS 2005–2009]

Crash mode	Age (years)				Total	Percent total
	<1	1–3	4–7	8–12		
Rollover	13.8	26.4	13.4	1.4	55	25
Front	16	35.6	19.8	1	72.4	32
Side	17.4	34.8	15	1.2	68.4	31
Near-side	10.6	20	9.6	0.8	41	18.6
Far-side	6.8	14.8	5.4	0.4	27.4	12.4
Rear	8.6	9.2	6	0.8	24.6	11
Total	55.8	106	54.2	4.4	220.4	100

Of the side impact crash fatalities among CRS restrained children 0 to 12 YO in rear seating positions, three quarters of near side fatalities (30.6/41) were to children under the age of 4.

In-Depth Study of Injuries to Child Occupants in Motor Vehicle Crashes

In 2010, the agency published an analysis of the NASS—General Estimates System (GES) data for the years 1999–2008 to better understand injuries to children in motor vehicle traffic crashes.[41] The analysis was conducted for three different child age groups (<1 YO, 1 to 3 YO, and 4 to 7 YO) and for different crash modes (rollover, front, side, and rear). The

[40] Sherwood, C.P., Ferguson, S.A., Crandall, J.R., ''Factors Leading to Crash Fatalities to Children in Child Restraints,'' 47th Annual Proceedings of the Association for the Advancement of Automotive Medicine (AAAM), September 2003.

[41] Hanna, R., ''Children Injured in Motor Vehicle Traffic Crashes,'' DOT HS 811 325, NHTSA, May 2010, *http://www-nrd.nhtsa.dot.gov/Pubs/811325.pdf*, last accessed on July 2, 2012.

analysis indicated that CRSs are effective in reducing incapacitating injuries in all three child age groups examined and in all four crash modes. The analysis found that rollover crashes accounted for the highest rate of incapacitating injuries, with the incidence rate among unrestrained children (26 percent) being nearly 3 times that for children restrained in CRSs (9 percent). In near-side impact crashes, unrestrained children (incidence rate = 8 percent) were 8 times more likely to sustain incapacitating injuries than children in CRSs (incidence rate = 1 percent).

In support of the NPRM, the agency analyzed NASS–CDS for the years 1995–2009 to obtain annual estimates of moderate or higher severity injuries (AIS 2+ injuries) among children of different ages in different restraint environment and crash modes. See Table 7 and 8.

TABLE 7—AVERAGE ANNUAL ESTIMATES OF 0 TO 12 YO CHILDREN WITH AIS 2+ INJURIES IN REAR SEATING POSITIONS OF LIGHT PASSENGER VEHICLES INVOLVED IN MOTOR VEHICLE CRASHES BY RESTRAINT TYPE

[NASS–CDS 1995–2009]

Restraint	Age (years)				Total	Percent total
	Under 1	1–3	4–7	8–12		
None	26	174	765	969	1934	31.7
Adult Belt	0	93	722	1550	2365	38.7
CRS	164	883	422	16	1485	24.3
Unknown if used	1	32	215	66	314	5.1
Total	191	1182	2124	2601	6098	100

Annually, there were, on average, approximately 6,100 AIS 2+ injuries to children 12 YO and younger seated in the rear seats of light passenger vehicles with 1,373 of these injured occupants being younger than 4 YO. Approximately 1,485 CRS restrained children 12 YO and younger sustained AIS 2+injuries, among which 1,047 (71 percent) were children younger than 4 YO and 422 (28 percent) were 4 to 7 YO children.

The NASS–CDS data files for the years 1995–2009 were further analyzed to determine crash characteristics. Table 8 presents the average annual estimates of 0 to12 YO children with AIS 2+ injuries in rear seating positions of light passenger vehicles. Thirty-one percent of the children were injured in side crashes, 40 percent in frontal crashes, and 23 percent in rollover crashes.

TABLE 8—AVERAGE ANNUAL ESTIMATES OF 0 TO 12 YO CHILDREN WITH AIS 2+ INJURIES IN REAR SEATING POSITIONS OF LIGHT PASSENGER VEHICLES INVOLVED IN MOTOR VEHICLE CRASHES BY CRASH MODE

[NASS–CDS 1995–2009]

Rollover status, damage type	Age (years)				Total	Percent of known
	<1	1–3	4–7	8–12		
Rollover	38	278	372	704	1,392	23
Front	103	356	777	1138	2,374	40
Side	34	371	893	652	1950	31
Near-Side	24	280	464	438	1,209	19
Far-Side	10	91	429	214	741	12
Rear	17	139	82	106	344	6
Other	0	36	0	1	37	1
Total	192	1,180	2,124	2,601	6,097	100

To better understand the crash characteristics of children restrained in child restraints, a similar analysis as that shown in Table 8 was conducted except that only the cases where the children were restrained in CRSs were included in the analysis. The results are presented in Table 9.

TABLE 9—AVERAGE ANNUAL ESTIMATES OF 0 TO 12 YO CRS RESTRAINED CHILDREN WITH AIS 2+ INJURIES IN REAR SEATING POSITIONS OF LIGHT PASSENGER VEHICLES INVOLVED IN MOTOR VEHICLE CRASHES BY CRASH MODE

[NASS–CDS 1995–2009]

Crash mode	Age (years)				Total
	Under 1	1–3	4–7	8–12	
Rollover	28	148	44	0	220
Front	94	310	214	16	634
Side	31	307	137	0	475
Near-side	22	253	44	0	319
Far-side	9	54	93	0	156

TABLE 9—AVERAGE ANNUAL ESTIMATES OF 0 TO 12 YO CRS RESTRAINED CHILDREN WITH AIS 2+ INJURIES IN REAR SEATING POSITIONS OF LIGHT PASSENGER VEHICLES INVOLVED IN MOTOR VEHICLE CRASHES BY CRASH MODE—Continued

[NASS–CDS 1995–2009]

Crash mode	Age (years)				Total
	Under 1	1–3	4–7	8–12	
Rear	12	98	26	0	136
Total	165	863	421	16	1465

For AIS 2+ injured 12 YO and younger child occupants in passenger vehicles restrained in CRSs in rear seating positions, 15 percent of the injuries were in rollover events, 43 percent in frontal crashes, 33 percent in side crashes, and 9 percent in rear crashes. Sixty-seven percent (319/475) of the occupants in side crashes were in near-side impacts.

In the above analyses some of these injuries and fatalities involved children in seats that were incorrectly used. However, we do not have complete data on the number accidents that involved misuse because accident databases do not generally collect data on how child restraints were used.

VIII. Past NHTSA Efforts

In the past, NHTSA has explored the possibility of side impact requirements for child restraints in FMVSS No. 213.

When NHTSA first considered dynamic testing of child restraints (39 FR 7959; March 1, 1974), the agency proposed a 90 degree lateral impact simulating a 32 km/h (20 mph) crash. NHTSA proposed that each CRS would have to retain the test dummy within the system, limit head motion to 483 mm (19 inches (in)) in each lateral direction measured from the exterior surface of the dummy's head, and suffer no loss of structural integrity.

NHTSA withdrew the proposal after testing a number of restraints at a speed of 32 km/h (20 mph) and at a horizontal angle of 60 degrees from the direction of the test platform travel. The tests found that for outboard seating positions, only one of those restraints—one that required a tether—could meet the lateral head excursion limits that had been proposed. This was of concern because tethers were widely unused at that time. Further, the agency found that some restraints with impact shields, which, the agency stated, performed well in frontal crashes and which were rarely misused, could not pass the lateral test even when placed in the center seating position. The agency decided not to pursue lateral testing of child restraints given the cost of the design changes that would have been necessary to meet the lateral test, the problems with misuse of tethers, and the possible price sensitivity of child restraint sales. (43 FR 21470, 21474; May 18, 1978.)

In 2002, in response to the Transportation Recall Enhancement, Accountability and Documentation Act (''TREAD Act'') (Pub. L. 106–414, 114 Stat. 1800), NHTSA issued an advance notice of proposed rulemaking (ANPRM) to request comments on the agency's work in developing a possible side impact protection requirement for CRSs (67 FR 21836, May 1, 2002).

Information indicated that child head injury was prevalent in side crashes. However, the agency was not able to confirm whether the majority of injuries and fatalities occur primarily due to direct head contact with the vehicle interior or other objects in the vehicle, or whether these injuries and fatalities are a result of non-contact, inertial loading on the head and neck structure. Due to these unknowns about head injury causation, the agency considered two side impact performance tests for child restraints. The tests were modeled after the simulated side impact test administered by the New South Wales, Australia, Roads and Traffic Authority (discussed in the next section). In one test, the CRS had to limit head excursion and HIC[42] when oriented at 90 degrees to the direction of sled travel. In the second test developed by NHTSA, a rigid structure, representing the side of the vehicle's interior side structure, was positioned adjacent to the child restraint. Limits on HIC, chest acceleration, a neck injury criterion and chest deflection were considered.

The ANPRM requested information on the following areas: (a) Determination of child injury mechanisms in side impacts, and crash characteristics associated with serious and fatal injuries to children in child restraints; (b) development of test procedures, a suitable test dummy and appropriate injury criteria; and (c) identification of cost beneficial countermeasures.

The agency received approximately 17 comments on the ANPRM. Commenters supported enhancing child passenger protection in side impacts, but were concerned about the uncertainties with respect to the three areas highlighted above. A number of commenters believed that a dynamic test should account for some degree of vehicle intrusion into the occupant compartment.

NHTSA withdrew the ANPRM after considering the comments on the ANPRM and other information. The agency found that for side crashes: (a) Data were not widely available as to how children are being injured and killed in side impacts (e.g., to what degree injuries were caused by intrusion of an impacting vehicle or other object); (b) there was not a consensus on an appropriate child test dummy and associated injury criteria for side impact testing; and, (c) potential countermeasures for side impact intrusion were not identified. NHTSA determined that an NPRM was not feasible given unknowns about side crashes involving children in CRSs and the time constraints of the TREAD Act.

IX. Side Impact Program Developments

Notwithstanding the ANPRM's withdrawal, NHTSA continued research into improved side impact protection requirements for child restraints.

As discussed in this section, the state of knowledge about side crashes and CRS-restrained children is considerably greater now than it was in 2002. Information about how restrained children are being injured and killed in side crashes has become increasingly available in recent years. In addition, the agency has continued to evaluate test parameters and potential methodologies to replicate a representative side impact scenario that could potentially be developed into a dynamic side impact test procedure.

[42] Head injury criterion.

a. Side Impact Environment for Children

Sherwood [43] analyzed fatalities of children under 5 years of age and found that even in survivable crashes there was intrusion into the interior space occupied by the child. Arbogast [44] found intrusion to be an important causative factor for moderate/serious injury and suggested that side impact test procedures include intrusion into the occupant space. Howard [45] found that struck side child passengers sustained severe head, torso and extremity injuries, many of them attributable to direct intrusion.

Sherwood also found that most side crashes had a longitudinal crash component and recommended that child restraints be designed to take into account both longitudinal and lateral components of the direction of force in a side crash. This finding accords with that found by NHTSA while developing FMVSS No. 214 (55 FR 45733), where data showed that during most side impact crashes, the struck vehicle is traveling forward while being struck on the side.

Nagabhushana [46] noted that vehicle crashes involving child occupants most often had a principal direction of force of 2 o'clock (60 degrees) or 10 o'clock (300 degrees). Nagabhushana also found that the average change in velocity in side crashes involving children 1 to 3 YO (in crashes where the child was positioned near-side, on the struck side of the vehicle) was 23 km/h (14 mph). NHTSA examined NASS–CDS data files for the years 1995–2009 for side impact crashes of light vehicles and found that 92 percent of near-side crashes to restrained children (0 to 12 YO) had a change in velocity of 30 km/h (19 mph) or lower. This change in velocity is approximately equal to that experienced by a light vehicle in a FMVSS No. 214 MDB side impact test. This 92 percent is of all near side crashes involving restrained children 0–12 years old. These near-side crashes were not only fatal crashes, but also included those where occupants were not injured or sustained non-fatal injuries.

b. Injury Mechanisms in Side Impact

McCray (2007) [47] analyzed the NASS–CDS and Crash Injury Research and Engineering Network (CIREN) data files for the years 1995–2005 to better understand injuries to children 1 to 3 YO in side impact crashes. The study found that children restrained in CRSs exhibited more head injuries (59 percent) than torso injuries (22 percent) and injuries to extremities (14 percent). Children in near-side crashes tended to suffer more severe injuries than those in far-side crashes.

Arbogast (2004) [48] queried the Partners for Child Passenger Safety Study (PCPS) data collected from December 1, 1998 to November 30, 2002 and found that the risk of injury (AIS 2+: moderate or greater severity) for children restrained in CRSs in near-side impact crashes was significantly higher (8.9 injured children per 1,000 crashes) than those in far-side [49] impact crashes (2.1 injured children per 1,000 crashes) and those in frontal crashes (2.7 injured children per 1,000 crashes).

NHTSA analyzed NASS–CDS average annual estimates (1995–2009) for AIS 2+ injuries to children 0 to 12 YO in rear seats. The most common AIS 2+ injuries among restrained children in near-side impacts were to the head and face (55 percent), torso (chest and abdomen—29 percent), upper and lower extremities (13 percent). The most common injury contacts for AIS 2+ injuries were the side interior (33 percent), the front seat back (11.12 percent) and the CRS (9 percent).[50]

Arbogast (2010) [51] examined two in-depth crash investigation databases (CIREN and the PCPS) for rear-seated CRS-restrained children in side impact crashes who sustained AIS 2+ injuries. Arbogast found that among the 41 cases examined, 28 children sustained head injuries and 9 sustained thoracic injuries (lung contusions without rib fractures). In general, head and thorax injuries were due to contact with the CRS structure or the door interior. For near- and center-seated occupants, the head and face were the most common body regions of injury, followed by the thorax. For far-side occupants, there were fewer injuries and there was no clear pattern of body region.

c. Global Dynamic Side Impact Tests

Globally, several organizations have developed or continued work on side impact test procedures for child restraints.

- Australia and New Zealand's dynamic side impact test procedure (AS/NZS 1754 Revision 2004) specifies two different side impact tests. The first test simulates a far-side crash, in which a bench seat with a CRS attached to it is mounted on a sled at a 90 degree orientation and is subjected to lateral acceleration representative of that in a side impact vehicle crash. The second test simulates a near-side crash, incorporating a bench seat mounted at 90 degrees on the sled along with a fixed door mounted at the front of the sled adjacent to the bench seat. The sled is calibrated to undergo a velocity change of not less than 32 km/h (20 mph), with a deceleration of 14–20 g. P-series dummies developed by the Netherlands Organization for Applied Scientific Research (TNO) are used to test forward-facing seats and boosters, and the TNO P-series and the TARU Theresa dummy are used for infant rear-facing restraints. The AS/NZS 1754 regulation specifies that the child restraints shall not allow any head contact with any part of the test door. (The P-series ATDs are frontal impact test dummies. They were not specially designed for use in side impacts. The TARU Theresa dummy represents a 6-week-old infant and is an uninstrumented dummy with a weight of only 4 kg (9 lb).)
- Australia's consumer information program rates the performance of CRSs in side impacts through the ''Child Restraint Evaluation Program'' (CREP). The test procedure is similar to AS/NZS 1754. CREP utilizes two side impact tests for its CRS rating system; one test is at a 90 degree impact and the other is at a 66 degree [52] impact, both with a fixed door structure in place. The velocity of the sled is 32 km/h (20 mph) and its peak deceleration is 17 g. CREP rates the child restraint system in the side impact test based on child restraint durability and structural integrity, dummy retention in the CRS, and head excursion and contact with the wall.

[43] Sherwood, et al., 2003, *supra.*

[44] Arbogast, K.B., Chen, I., Durbin, D.R., and Winston, F.K., ''Injury Risks for Children in Child Restraint Systems in Side Impact Crashes,'' International IRCOBI Conference on the Biomechanics of Impact, October 2004.

[45] Howard, A., Rothman, L., Moses McKeag, A., Pazmino-Canizares, J., Monk, B., Comeau, J.L., Mills, D., Blazeski, S., Hale, I., and German, A., ''Children in Side-Impact Motor Vehicle Crashes: Seating Positions and Injury Mechanisms,'' The Journal of Trauma, Injury, Infection, and Critical Care, Vol. 56, No. 6, pp. 1276–1285, 2004.

[46] Nagabhushana, V., Morgan, R., Kan, C., Park, J., Kuznetsov, A., ''Impact Risk for 1–3 Year-Old Children on the Struck Side in a Lateral crash,'' DOT HS 810 699, April 2007.

[47] McCray, et al., 2007, *supra.*

[48] Arbogast, et al., 2004, *supra.*

[49] Far-side impacts are side impact crashes where the occupant is seated away from the struck-side of the vehicle (center seating position or opposite the struck-side of the vehicle).

[50] In comparison, data showed that the most common AIS 2+ injuries among children restrained in frontal impacts were to the head and face (42 percent), torso (chest and abdomen—27 percent), and upper and lower extremities (25 percent). The most common injury contacts for AIS 2+ injuries were the seat back support (50 percent) and the belt webbing or buckle (19 percent).

[51] Arbogast, K.B., Locey, C.M., Zonfrillo, M.R., Maltese, M.R., ''Protection of Children Restrained in Child Safety Seats in Side Impact Crashes,'' Journal of Trauma, 2010, October, 69(4): 913–23.

[52] Previously this was a 45 degree impact.

• Germany's Allgemeiner Deutscher Automobil-Club (ADAC) adopted a consumer information rating program. The procedure uses a body-in-white of a VW Golf or Opel Astra. The body-in-white [53] structure is mounted on a sled at an 80 degree angle. The vehicle door does not intrude into the passenger area; the door is welded shut and covered with foam creating a flat door. The sled is decelerated from an initial velocity of 25 km/h (16 mph) with an 18 g acceleration pulse. This test method is used to determine ADAC star ratings based on head containment, head acceleration, chest acceleration, neck moment and neck force of the Q series dummies and the P10 (P-series, 10 YO child dummy) for booster seats.

• The International Standards Organization (ISO) and TNO have continued to work on developing a side impact test which uses a rotating hinged door to simulate door intrusion into the CRS.[54]

• The World Forum for the Harmonization of Vehicle Regulations (WP.29) of the European Union (EU) approved Phase I (total of 3 phases) of a new regulation on child restraint systems in November 2012, which includes a side impact test procedure.[55] The test procedure is currently only intended for evaluating CRSs with rigid ISOFIX anchorages.[56] The regulation's test procedure consists of a fixed flat door on a sled that intrudes into a CRS secured on a bench seat using the ISOFIX anchorages. The relative velocity between the door and the bench seat at time of impact is approximately 25 km/h (16 mph). The impact is purely lateral with no longitudinal door velocity component. The ISOFIX anchorages on the test bench are allowed to slide along the seat up to 250 mm to avoid damage of the attachments and the test equipment. The CRSs are tested using the Q-series newborn, 1 YO, 1½ YO, and 3 YO child dummies in accordance with manufacturers' recommended size of child for the CRS. Injury criteria include head containment (no contact of the head with the door panel), head acceleration, and a head injury criterion.

• European authorities are developing a new consumer program, ''New Programme for the Assessment of Child Restraint Systems (NPACS),'' [57] to create a harmonized program for the evaluation of ISOFIX universal and ISOFIX semi-universal [58] child restraints. This rating program would include a side impact test for CRSs and will utilize ATDs. Details of the test procedure are not available at this time, but it is the agency's understanding that, although the eventual test procedure may share some aspects with the recent ECE regulation, it will likely not be based on the same test method.

• Takata developed a sled test buck for testing child restraints in a side impact environment. The buck has two moving fixtures: The sled buck itself and the sliding ''vehicle'' seat on which the child restraint is attached. The sliding ''vehicle'' seat is mounted to a rail system, along with a ''side door'' structure rigidly mounted to the sled buck structure. The details of this test procedure are described more fully in section IX.

d. Side Impact Test Dummy

The development of a specially-designed child side impact test dummy, the Q3s, has provided an important tool for evaluating CRSs in side impact. The Q3s is built on the platform of the standard Q3 dummy series (the Q-series are frontal ATDs used in Europe), but the Q3s has enhanced lateral biofidelity, durability and additional instrumentation for specialized use in side impact testing. The Q3s is more fully discussed in the 49 CFR Part 572 NPRM.

X. Developing NHTSA's Side Impact Test

The state of knowledge and the practicability of measures that can be taken to improve side impact protection are now sufficient for NHTSA to propose a reasonable and realistic side impact test for incorporation into FMVSS No. 213.

Based on the information that has become available since the 2002 ANPRM, we tentatively conclude that a side impact is best replicated if the test procedure reflects and replicates dynamic elements of both the striking and struck vehicle in a vehicle-to-vehicle crash. We believe that a side impact test procedure should account for: (1) The struck vehicle door velocity prior to the interaction of the striking vehicle with the door sill of the struck vehicle, (2) the acceleration profile of the struck vehicle, and (3) the impact angle to replicate the longitudinal component of the direction of force. Specification of these parameters, based on actual vehicle crash characteristics, would enable the realistic simulation of the relative velocity between the intruding door and the CRS.

Selection of these parameters is consistent with the findings from other researchers (see Side Impact Environment for Children, section IX, *supra*) that found the change in velocity, the level of door intrusion, and the impact angle to be significant factors of near-side impact crashes involving children. In addition, the test bench and door geometry and vehicle seat and door padding characteristics are important in a side impact test, to ensure these are representative of the vehicle rear seat environment.

a. Assessment of Existing Global Efforts

In order to build on existing efforts, NHTSA reviewed the above procedures and regulations developed globally that dynamically test child restraints in the side impact environment. Except for the Takata test procedure, the procedures and regulations did not replicate all of

[53] Body-in-white refers to a stage of automobile manufacturing in which the car body sheet metal has been welded and assembled but before the motor and chassis assemblies have been added.

[54] Johannsen, H., et al., ''Review of the Development of the ISO Side Impact Test Procedure for Child Restraint Systems,'' 20th International Technical Conference on the Enhanced Safety of Vehicles, Paper No. 07–0241, Lyon, France, 2007. *http://www-nrd.nhtsa.dot.gov/pdf/esv/esv20/07-0241-W30.pdf.* Last accessed May 3, 2012.

[55] *http://www.unece.org/fileadmin/DAM/trans/doc/2012/wp29/ECE-TRANS-WP29-2012-53e.pdf.*

[56] The ISOFIX concept originated as a 4-point rigid system, where four sturdy braces are mounted on the bottom of a child restraint. Each brace has a latch at its end. Two of the latches connect, through holes at the vehicle seat bight, to a metal bar in the seat frame. The other two latches, at the bottom braces, connect to a bar below the vehicle seat cushion. Alternatives to the concept 4-point ISO system have been developed, including a system that consists of the CRS having two rigid rear braces at the seat bight (rather than the 4 points of the original ISOFIX). Some ISOFIX concepts have included an upper tether, some have included a support leg (see next footnote, below). FMVSS No. 225's ''LATCH'' system grew out of the ISOFIX concept, as the lower bars of the LATCH system are similar to the seat frame bar at the seat bight in ISOFIX. LATCH requires the CRS to have components that attach to the vehicle's lower bars, but LATCH does not require the components to be rigidly attached to the CRS as on a brace. The components may be attached to the CRS by webbing material. Because of these differences, a test designed for ISOFIX systems is generally not appropriate for testing LATCH systems, and vice versa.

[57] NPACS is similar to NHTSA's (and the general European) New Car Assessment Program (NCAP), in that it is a voluntary consumer information program, rather than a binding regulation. The difference is that NPACS is being designed to test the CRS itself, while NCAP focuses on how the vehicle performs.

[58] ISOFIX universal CRS means forward-facing restraints for use in vehicles with positions equipped with ISOFIX anchorages and a top tether anchorage. ISOFIX semi-universal CRS means: (a) A forward-facing restraint equipped with a support leg; (b) a rearward facing restraint equipped with a support leg or a top tether strap for use in vehicles with positions equipped with an ISOFIX anchorage system and a top tether anchorage if needed; (c) a rearward facing restraint, supported by the vehicle dashboard, for use in the front passenger seat equipped with an ISOFIX anchorage system; or (d) a lateral facing position restraint equipped, if needed, with an anti-rotation device for use in vehicles with positions equipped with an ISOFIX anchorage system and a top tether anchorage, if needed.

the dynamic elements of a side crash that we sought to include in the side impact test or were not sufficiently developed for further consideration.

NHTSA considered AS/NZS 1754 for implementation into FMVSS No. 213 but has not proposed it, mainly because the procedure does not simulate the intruding door, which we believe is an important component in the side impact environment. In addition, AS/NZS 1754 does not account for a longitudinal component, which we also believe to be an important characteristic of a side crash. (As noted above, NHTSA's 2002 ANPRM, *supra,* was based on AS/NZS 1754. Commenters to the ANPRM believed that a dynamic test should account for some degree of vehicle intrusion into the occupant compartment.) Australia's CREP test also was limited by its lack of an intruding door, which is a component that is important in the side impact environment.

Germany's ADAC test procedure lacks an intruding door. Further, the vehicles represented by the body-in-white in Germany's ADAC test procedure are limited, and do not represent the range of vehicles in the U.S. fleet that we would like to have represented in our side impact test to safeguard child passengers in the U.S.

While the ISO/TNO test procedure accounts for the deceleration and intrusion experienced by a car in a side impact crash, one of its limitations is that the angular velocity of the hinged door is difficult to control, which reportedly results in poor repeatability.[59] In addition, this test procedure does not include a longitudinal velocity component to the intruding door, which is present in most side impacts and which, we believe, should be replicated in the FMVSS No. 213 test.

The EU's test procedure did not appear appropriate since the test is of lower severity than the FMVSS No. 214 MDB side impact crash test of a small passenger vehicle. Moreover, the test procedure is only intended for evaluating CRSs with rigid ISOFIX attachments, which are not available on CRSs in the U.S., and, due to the differences in to the two systems discussed above, a test designed for one type of system will not produce useful results for testing the other system. Further, the test procedure does not seem to produce a representative interaction between the door and CRS during a side impact. The NHTSA-developed test procedure replicates a real-world T-bone type intersection collision, involving two moving vehicles, with door intrusion. In contrast, the European test with the sliding ISO anchorages is a purely lateral impact (stationary vehicle impacted laterally by another vehicle) and it does not correctly represent the door intrusion and door to child restraint interaction in real world side crashes, In addition, the sliding anchors in the European test allow for the child restraint to slide away from the impacting door, which also causes the European test be less reflective of a real-world crash than the test proposed in today's NPRM. The European test is likewise sensitive to the friction of the sliding anchorages, which may introduce variability in the test results.[60] Finally, the European procedure uses the Q series dummies, which are frontal crash dummies. NHTSA evaluated the Q3 dummy and has tentatively concluded that the Q3 dummy does not have adequate biofidelity in lateral impact, in contrast to the Q3s dummy we propose, which is designed for side impacts.

The NPACS consumer program for side impact is still undergoing development and the details of the sled test procedure and dummies are not available.

b. Takata Test Procedure

In 2007, the agency began evaluating the Takata sled test procedure for evaluating child restraints in side impact.[61] The test procedure demonstrated versatility for tuning parameters to obtain the desired test environment. NHTSA could tune the parameters to simulate the two-vehicle side crash replicated in the MDB test of FMVSS No. 214 (striking vehicle traveling at 48 km/h (30 mph) impacting the struck vehicle traveling at 24 km/h (15 mph), which accounts for approximately 92 percent of near-side crashes involving restrained children (0 to 12 YO children in all restraint environments—seat belts and CRSs). The procedure includes an intruding door and can simulate the relative velocity between the CRS and the intruding door. It can also be easily modified to change the impact angle to introduce a longitudinal component present in the FMVSS No. 214 tests.

In its preliminary evaluation of the Takata test protocol, after making minor modification to the test parameters,[62] NHTSA determined that the test procedure was repeatable and was able to provide results that distinguished between the performance of various CRS models based on the design of the side wings and stiffness of the CRS padding.[63]

The Takata procedure is based on an acceleration sled with a test buck consisting of a sliding ''vehicle'' seat mounted to a rail system, along with a ''side door'' structure rigidly mounted to the sled buck structure. The vehicle seat and side door are representative of today's passenger vehicles. Aluminum honeycomb is mounted below the side door structure. The sliding vehicle seat is positioned sufficiently away from the side door to allow the sled to reach a desired velocity prior to the sliding vehicle seat coming into contact with the side door and aluminum honeycomb. The purpose of the design is for the side door structure to impact the sliding ''vehicle'' seat at a specified speed, at which time the aluminum honeycomb begins to crush. The door contacts the CRS about the same time as the honeycomb contacts the sliding ''vehicle'' seat. The honeycomb characteristics are selected such that the desired sliding seat acceleration is achieved. The procedure is illustrated in Figure 1 below.

[59] Sandner, V., et al., ''New Programm for the Assessment of Child Restraint Systems (NPACS)—Development/Research/Results—First Step for Future Activities?,'' 21st International Conference on the Enhanced Safety of Vehicles, Paper Number 09–0298, 2009. *http://www-nrd.nhtsa.dot.gov/pdf/esv/esv21/09-0298.pdf.* Last accessed on June 11, 2012.

[60] Hynd, et al., ''Analysis for the development of legislation on child occupant protection,'' TRL, July 2010.

[61] Takata made a presentation on its side impact test procedure during a February 8, 2007 NHTSA public meeting. The meeting concerned: Improving LATCH, CRS side impact safety, and LATCH education. See meeting notice, 72 FR 3103, January 24, 2007, Docket No. NHTSA–2007–26833. NHTSA also published two papers on the agency's research and testing on the Takata test procedure. See Sullivan 2009 and Sullivan 2011, *infra.*

[62] Sullivan, 2009, *supra.*

[63] Sullivan et al., ''NHTSA's Evaluation of a Potential Child Side Impact Test Procedures,'' 22nd International Conference on the Enhanced Safety of Vehicles, Paper No. 2011–0227 (2011).

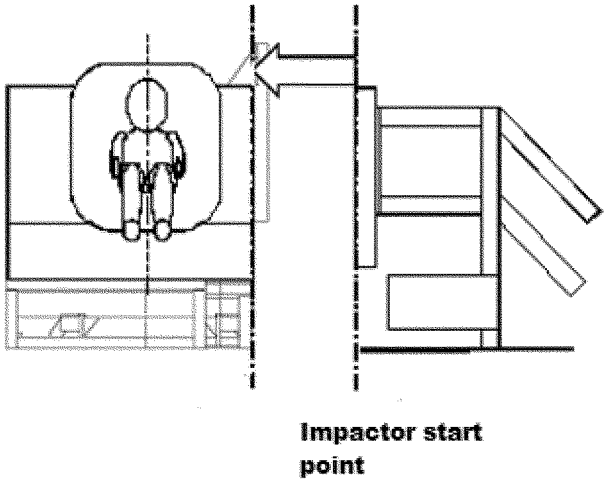

(a) Pre-Test Condition

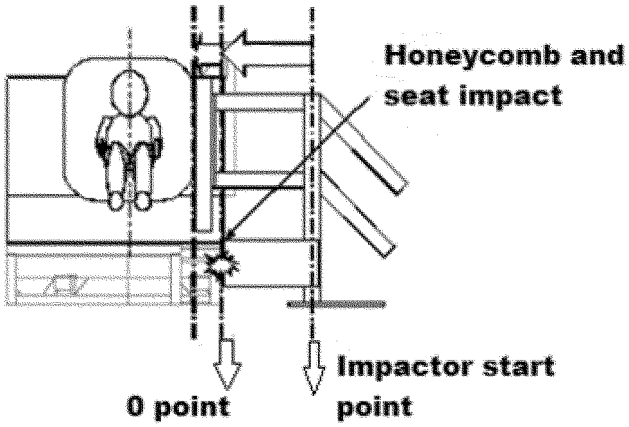

(b) At Time of Door Contact With CRS

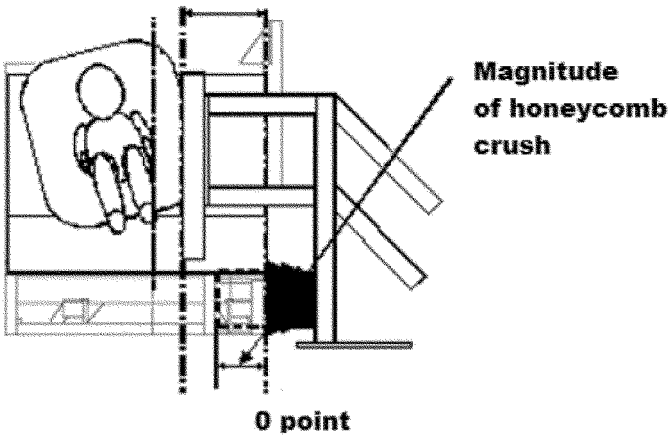

(c) At End of Test

Figure 1 - Takata Side Impact Sled System--(a) Pre-test condition, (b) At time of door contact with CRS, (c) At end of test (final travel of door).

After considering the Takata test procedure, NHTSA selected the test method as a basis for developing a side impact test for evaluating CRS performance.

XI. The Proposed Test Procedure

As shown above, the proposed test buck consists of a sliding ''vehicle'' seat and ''side door'' rigidly mounted to the

acceleration sled buck structure. Aluminum honeycomb is mounted below the side door structure. The side door is made to reach a desired velocity prior to the aluminum honeycomb coming into contact with the sliding ''vehicle'' seat structure. The parameters of the test buck and the honeycomb could be tuned to simulate the MDB test of FMVSS No. 214.

The agency examined data from FMVSS No. 214 MDB compliance tests to identify kinematic characteristics of the vehicle test that should be replicated in the sled test environment so that the latter is representative of the crash experience of a child restrained in a CRS in the rear seat. The following sled kinematic parameters were identified: (1) The acceleration profile of the sliding seat (representing the struck vehicle acceleration); (2) the door velocity at time of contact with the sliding seat (this represents the struck vehicle door velocity; and (3) the impact angle of the door with the sliding seat (to replicate the longitudinal component of the direction of force).

NHTSA selected and analyzed several FMVSS No. 214 MDB tests of small passenger vehicles to determine the test parameters and test corridors representative of the target crash environment. The agency determined that a small passenger vehicle in an FMVSS No. 214 MDB crash test experiences a lateral change in velocity of about 30 km/h (18.6 mph). This change in velocity is greater than 92 percent of near-side impact real-world crashes involving restrained children 0 to 12 YO in light vehicles, as estimated by NHTSA using the NASS–CDS datafiles. In order to ensure that the side impact test would be sufficiently stringent to account for the greater acceleration and intrusion experienced by smaller vehicles, the agency focused on the crash characteristics of small passenger vehicles in FMVSS No. 214 side MDB tests, as opposed to the average estimates from all vehicles.

a. Sled Kinematic Parameters

1. Sliding Seat Acceleration Profile (Representing the Struck Vehicle)

To obtain a target acceleration pulse for the sliding seat that represents the motion of the struck vehicle, the right rear sill (the opposite side of impact) lateral (Y-axis) acceleration of ten small vehicles in FMVSS No. 214 tests were analyzed.[64] The right rear sill accelerations were averaged to derive a typical struck vehicle acceleration corridor for small sized vehicles. Figure 2 shows the upper and lower boundaries of the rear sill accelerations in thick solid black lines while the dotted line represents the average of the accelerations. The solid thin black line in Figure 2 is a representative sliding seat acceleration pulse.

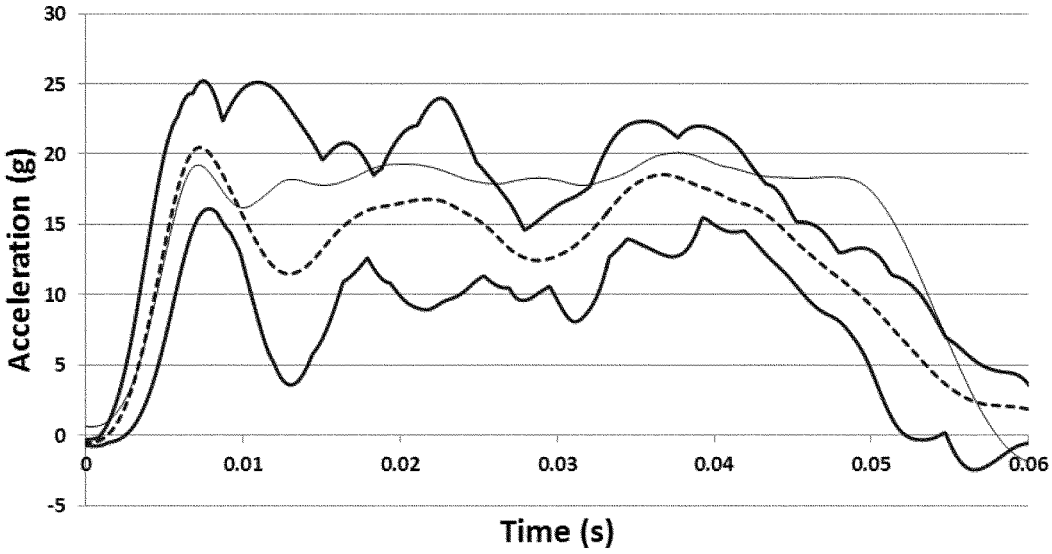

Figure 2 – Average Sliding Seat Acceleration along with Vehicle Lateral Acceleration Corridor

To obtain the sliding seat velocity (representing the motion of the struck vehicle), the right rear sill lateral (Y-axis) accelerations of the ten small vehicles were integrated to calculate the velocity. The results showed a change in velocity of approximately 26 to 29 km/h (16 to 18 mph).

2. Door Velocity

The door velocity (which represents the struck vehicle door velocity), was obtained from the integration of door acceleration data from four of the ten previously selected FMVSS No. 214 compliance tests (only these four vehicles were tested with accelerometers installed on the door).[65] The resulting lateral (Y-axis) peak velocities of the door during interaction with the test dummy ranged from 30 km/h (18.6 mph) at the upper centerline to 32.0 km/h (20 mph) at the mid-centerline. Thus, the target lateral door velocity selected for the test buck was 31 km/h (19.3 mph). Since the kinematics of the door prior to the interaction with the sliding seat do not affect the energy and impulse imparted to the sliding seat and child restraint system, the acceleration profile of the impacting door need not be specified as long as its velocity during the interaction with the sliding seat and child restraint system is maintained within specified velocity tolerances. The door velocity should be 31 km/h (19.3 mph) prior to the honeycomb contacting the sliding seat structure.

[64] Sullivan et al., 2009.

[65] Id.

The relative velocity profile of the intruding door with respect to the sliding seat from the time the door first contacts the sliding seat structure to the time the sliding seat and the door reach a common velocity was determined from sled simulations with a door impact velocity of the 31 km/h (19.3 mph) in the direction of the sliding seat motion and a sliding seat acceleration profile shown in Figure 2. Figure 3 shows the average (dotted line) and the upper and lower boundaries (solid lines) of the velocity profile for the door relative to the sliding seat in sled tests performed during the development of the test procedure. The upper and lower boundaries of the relative door velocity represent the maximum and minimum values of the cluster of relative door velocity profiles in these sled tests.

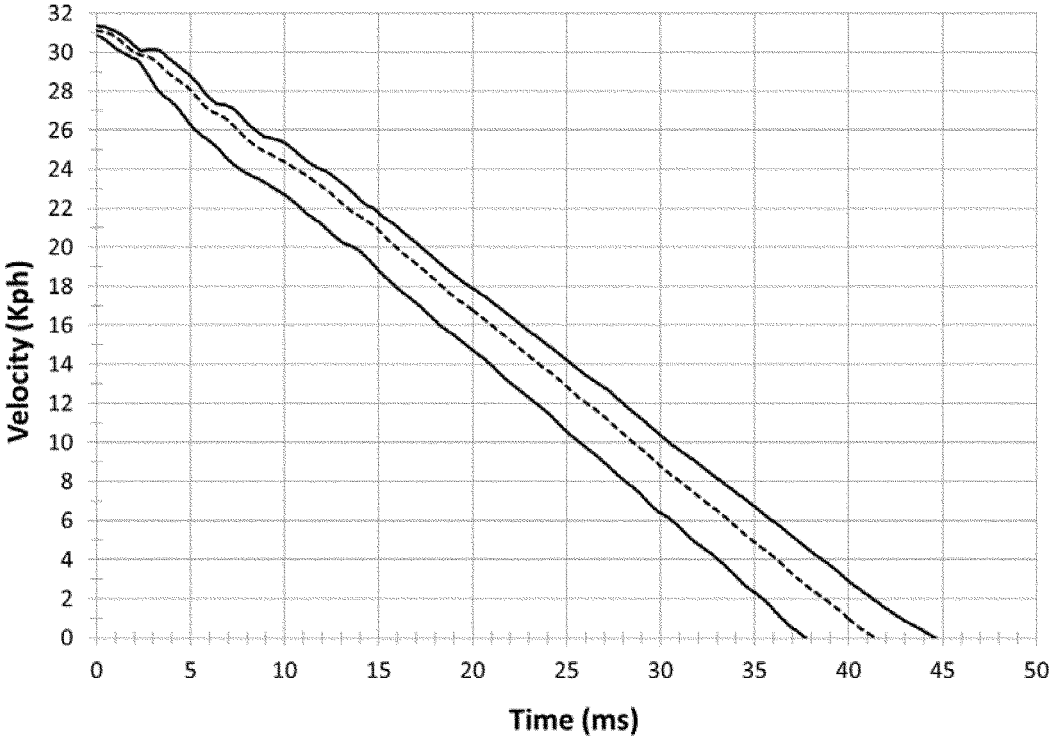

Figure 3 – Average Profile and Upper and Lower Boundaries of the Relative Velocity of the Door with respect to the Sliding Seat

Today's NPRM only proposes an acceleration profile for the sliding seat and a door impact velocity but does not propose a relative door velocity profile so as not to over specify the test environment. However, a door velocity profile with respect to the sliding seat may be desirable to ensure reproducible interaction of the intruding door with the child restraint in different types of sled systems. We are requesting comments on the need for specifying a relative door velocity profile to improve reproducibility of the test procedure. Depending on whether we receive information sufficiently supporting such a velocity profile, we may include one in the final rule.

3. Sled Buck Angle (Replicating Longitudinal Component of the Direction of Force)

The ten small vehicle FMVSS No. 214 tests were used to determine the impact angle of the sled buck. The right rear sill acceleration signals on both the longitudinal (X-axis) and lateral (Y-axis) directions were integrated to obtain the X and Y vehicle velocities. These velocities were used to calculate the angle of the resultant deceleration with respect to the lateral axis of the vehicle during the crash event.[66] The time period of interest was determined to be 5 to 60 ms, because this represents the typical time from initial motion of the struck vehicle through peak loading on the near-side occupant.

A reference frame was used in which a pure left-to-right lateral impact was zero degrees and a pure frontal impact was 90 degrees. The mean angles over the time period of interest for the ten vehicles ranged from 4 to 15 degrees, while the angle at any specific time ranged from −8 to 22 degrees across the ten vehicles. From these ranges, the agency decided to perform tests within a range of 0 to 20 degrees. These tests (at 0, 10, 15 and 20 degrees) were performed in an effort to evaluate the effect of the test buck's impact angle on dummy kinematics and injury responses. Based on the tests and on the average impact angle computed from the vehicle right rear sill velocities of MDB-to-vehicle crash tests, we selected a 10 degree impact angle as the most appropriate. NHTSA also conducted sled tests at different impact angles (0, 5, 10, and 20 degrees) using the Takata sled procedure to compare them to four MDB crash tests (discussed in a later section) performed using the Q3s dummy restrained in a CRS in the rear seat behind the driver. We found that a 10 degree impact angle on the sled test produced dummy responses closer to those measured by the ATD in the same CRS in the four MDB crash tests than the other impact angles.[67]

b. Rear Seat Environment Parameters

The proposed SISA consists of a sliding ''vehicle'' seat mounted to a rail system, along with a side door structure rigidly mounted to the sled buck

[66] Sullivan et al., 2009.

[67] Sullivan et al. (2009).

structure. To ensure that the sliding ''vehicle'' seat and side door would be representative of today's passenger vehicles, NHTSA conducted a vehicle survey to examine the geometry and contact characteristics of present day vehicle rear seats, to select the geometry and material characteristics that are necessary to replicate the physical environment of a typical rear seat in a side impact test. NHTSA identified the following rear seat features to replicate in the SISA: Rear seat geometry, rear seat cushion stiffness, and door shape (height of window, armrest thickness, door padding). More information about the vehicle survey can be found in a technical report that has been placed in the docket.

NHTSA also performed a series of sled tests to undertake a sensitivity analysis to better understand the effect of the sled test parameters and sled system configuration on dummy responses. The parameters evaluated were the seat cushion stiffness, door padding stiffness, presence of armrest, and window sill height. Details of the findings of the sensitivity analysis are discussed in Sullivan (2011), *supra,* and are summarized in the discussion below and in the docketed technical report.

1. Rear Seat Cushion Stiffness

In the vehicle survey, NHTSA measured the rear seat cushion stiffness of 13 vehicles, as well as the seat cushion stiffness of the seat cushions used in FMVSS No. 213, ECE R.44, and the NPACS programs.[68] The 13 vehicles selected were a mix of different vehicle manufacturers and different vehicle types (passenger cars, sport utility vehicles, etc.). The NPACS cushion foam was evaluated even though the NPACS rating system is only in draft form, because European efforts to upgrade ECE R.44 are considering the use of NPACS foam for the seat cushion.[69]

Measurements were taken at various locations on the rear seat cushion of vehicles in quasi-static compression tests using an indentation plate.[70] The FMVSS No. 213 foam was found to be softer than all the vehicle seat foams surveyed. The NPACS and ECE R.44 foams were stiffer than the FMVSS No. 213 foam, and more representative of the vehicles selected in this study.

In NHTSA's sensitivity analysis (see docketed technical report), we conducted sled tests with the Q3s to determine the effect of the seat cushion stiffness on dummy readings and CRS performance. Three CRS models were evaluated (Evenflo Triumph Advance DLX, Maxi-Cosi Priori XP and Graco SafeSeat Step2/Cozy Cline). The FMVSS No. 213 foam (with vinyl cover) and the ECE R.44 foam (with cloth cover) were used in this series of tests.[71] The results of the evaluation indicated that seat cushion foam stiffness had little effect on the dummy responses in these side impact tests.

Based on the above, the agency is proposing that the seat cushion foam for the SISA have the stiffness of the ECE R.44 seat foam, given that the ECE R.44 foam is more representative of the current rear seats in the vehicle fleet than the FMVSS No. 213 cushion foam. The agency prefers the ECE R.44 foam over that of the NPACS foam because, although the two foams are similar in stiffness, the ECE R.44 foam is more readily available than the NPACS foam. Further, the NPACS procedure is still in draft form.

The agency has initiated a research program to evaluate how the test parameters of the FMVSS No. 213 frontal sled test should be updated to reflect any significant real world developments. Within this program, the agency's plans include developing a test bench seat with seat cushion stiffness that has characteristics of seat cushions in recent vehicle models.[72] The agency will consider, to the extent possible under the timeframes for the research and rulemaking programs, the merits of using this updated seat cushion foam in the side impact sled. In the meantime, the agency is currently proposing to use the ECE R.44 foam for the sliding bench seat in the side impact sled. While our current test data indicate that seat cushion foam stiffness has little effect on the dummy responses in this side impact test procedure, we request comment on the proposed seat cushion foam and seat cushion assembly.

2. Rear Seat Door Stiffness

To determine the sled door padding characteristics, we impact-tested eight vehicle doors using a Free Motion Head (FMH) (see the docketed technical report and Sullivan (2011)). The FMH impact tests consisted of a 3.5 kg (7.7 lb) child head form launched horizontally towards the door at 24 and 32 km/h (15 and 20 mph, respectively), which are the FMH impact test velocities used to test vehicle interiors in FMVSS No. 201, ''Occupant protection in interior impact'' (49 CFR 571.201).

The FMH was directed at different locations on the door where the head of the dummy was most likely to make contact. That is, the impact points were selected based on the center of gravity and top of the head locations of the Hybrid III (HIII) 3 YO child ATD, the HIII 6 YO child ATD, and the HIII 10 YO child ATD seated on the vehicle seat. The impact points were determined by tracking the location of head-to-door contact of these different sized ATDs when seated in the rear seat of a vehicle and leaned forward and laterally towards the door. Based on the results from the FMH tests of the eight vehicles, three foams (described as ''stiff,'' ''average'' and ''soft'' foams) spanning the range of vehicle door padding FMH impact characteristics were selected.

In NHTSA's sensitivity analysis (see technical report), we conducted a series of sled tests with the Q3s to assess the effect of door padding stiffness on the performance of the two CRS models (Graco Safe Seat Step 2 and Maxi Cosi Priori XP). ''Soft'' (United Foam # 2), ''average'' (Dow Ethafoam 220), and ''stiff'' (United Foam # 4) foam were used in 51 mm (2 in) thick padding applied to the simulated door wall panel.[73] Results showed that the door stiffness had little effect on dummy performance. The door stiffness had little effect on the Q3s dummy's HIC_{15} and chest deflection results, when restrained in the Graco SafeSeat Step 2 and Maxi-Cosi Priori XP seats, for the soft, average, and stiff door panel foams.

Given the above information, the agency is proposing that the door of the SISA comprise of 51 mm (2 in) thick foam of ''average'' stiffness, so as to be representative of the average rear seat characteristics. In addition, the foam material with average stiffness (Dow Ethafoam 220) is of lower cost compared to the other foams, is relatively easy to obtain commercially, and is relatively fungible, in that other materials with similar physical properties could easily be used in its place.

3. Rear Seat Environment Geometry

The agency surveyed 2010 model year passenger vehicles (passenger cars, SUVs, vans) to obtain dimensional

[68] Id.

[69] LeClaire, M., and Cheung, G., ''NPACS (New Programme for Assessment of Child restraint Systems, Phase 1 Final Report'' PPAD 9/33/128, Prepared for the Department of Transport, U.K., March 2006.

[70] Id.

[71] Sullivan et al. (2011).

[72] See also MAP–21, § 31501(b), ''Frontal Impact Test Parameters.'' Paragraph (1) states that, not later than 2 years after the date of enactment of MAP–21 (July 6, 2012), the Secretary shall commence a rulemaking proceeding to amend the standard seat assembly specifications under FMVSS No. 213 ''to better simulate a single representative motor vehicle rear seat.'' Paragraph (2) states that not later than 4 years after the date of enactment of MAP–21, the Secretary shall issue a final rule pursuant to paragraph (1).

[73] Sullivan et al. (2009).

characteristics of rear seat attributes that could affect the performance of a CRS in the rear seat compartment.[74] These attributes were: Seat back angle, seat pan angle, beltline height (from approximately the vehicle seat bight (i.e., the intersection of the seat cushion and the seat back)), height of the top of the armrest (from the seat bight), and armrest thickness (protrusion of the armrest from the door).[75] The agency measured the seat and door geometry, position, and dimensions using a Seat Geometry Measuring Fixture (SGMF).[76] The SGMF was positioned on the centerline of a rear seating position and measurements were made with respect to point A (center of the hinge) of the SGMF.

Seat Back and Seat Pan Angle

The seat back angle of the vehicles surveyed ranged from 9 to 28 degrees. The average was 20 degrees with a standard deviation of 4 degrees (see Sullivan et. al (2011) and technical report). The seat pan angle (the angle of the seat cushion to the horizontal) ranged from 7 to 23 degrees. The average seat pan angle was 13 degrees with a standard deviation of 4 degrees.

The original Takata buck had a seat back angle and a seat pan angle of 20 and 15 degrees, respectively. Both the seat back angle and the seat pan angle are well within the ranges found in NHTSA's vehicle survey, and are the same as the ECE R.44 bench seat. Therefore, these angles were adopted in the SISA.

Armrest Thickness

The armrest thickness (protrusion of armrest in the door) for the 25 vehicles surveyed ranged from 25 mm to 105 mm (1 in to 4.1 in). One vehicle was at or below 50 mm (2.1 in), 8 vehicles were between 51 mm and 70 mm (2.0 in and 2.75 in), 10 vehicles were between 71 mm and 80 mm (2.75 in and 3.1 in), and 5 vehicles were above 81 mm (3.1 in). One vehicle had no armrest.

The armrest thickness selected for the SISA sled system consists of a 64 mm (2.5 in) thick padding material attached to a 51 mm (2 in) thick door panel. The 64 mm (2.5 in) thickness of the armrest foam is within the range of armrest thickness from surveyed vehicles.

Beltline and Armrest Heights

The beltline (window sill) and top of the armrest heights of the 24 surveyed vehicles were measured using the SGMF with respect to point A (center of the hinge of the SGMF) (see Figure 4).

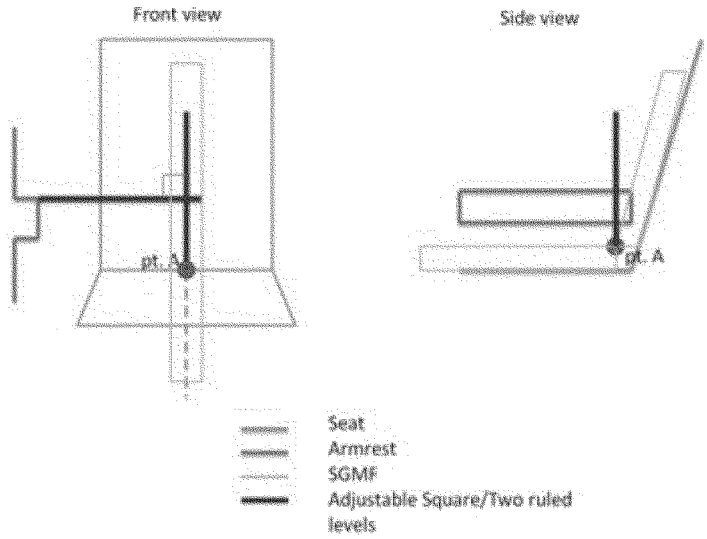

Figure 4 - Tool Placement when measuring lateral and vertical distance of armrest and windowsill to point A.

The survey showed that the beltline heights varied between 413 mm and 566 mm (16.2 in and 22.2 in) in height and the armrest heights varied between 122 mm and 349 mm (4.8 in and 13.7 in) with respect to point A. A 489 mm (19.2 in) beltline height and a 238 mm (9.3 in) armrest height were found to be about the median values of the vehicles' ranges. A 494 mm (19.4 in) beltline height and a 229 mm (9 in) armrest height were found to be about the average values for the vehicles surveyed.

In NHTSA's sensitivity analysis, we conducted sled tests of forward-facing and rear-facing CRS models and the Q3s dummy with the beltline height at 479 mm (18.8 in) and at 500 mm (19.6 in) to determine the effect of beltline height on dummy responses. Only 2 CRS models showed slightly lower HIC_{15} values with the raised windowsill. Of the 7 CRS models tested with both beltline heights, chest deflection decreased when the beltline height was raised from 479 mm to 500 mm (18.8 to 19.6 in). Only one CRS model resulted in higher chest deflections when the windowsill was raised, and 2 CRSs had chest deflections that were almost unchanged.

Tests with the CRABI dummy in rear-facing CRSs showed that the different beltline heights did not affect dummy responses. We believe this was due to the fact that most rear-facing CRSs designed for smaller children position

[74] See Aram et al., ''Vehicle Rear Seat Study—Technical Report, NHTSA, 2013,'' which is in the docket for this NPRM.

[75] The original Takata sled buck did not include an armrest. We modified the sled buck to include an armrest.

[76] The SGMF was fabricated using two 2 × 4 wood blocks (600 mm × 88 mm × 38 mm) and a three inch hinge. Photographs of the SGMF are in the report by Aram et al. (2013), *supra.*

the head lower (mostly below the beltline) and therefore the increased height (at 500 mm or 19.6 in) did not affect the outcome.

Only 6 vehicles (of the 24 surveyed) had a windowsill below the 479 mm (18.8 in) and were considered less representative of the vehicle fleet. Our test results indicated that with the Q3s seated higher above the beltline, HIC_{15} values were lower than when the ATD's head was lower than the beltline. In order to ensure that the side impact test is sufficiently stringent to account for vehicle beltlines that are higher than the average value, we are proposing a beltline height of 500 mm (19.6 in) for the SISA. Although this value is slightly higher than the average beltline height, it is well within the range of beltline heights for the vehicles surveyed.

The dimensions of the SISA door structure and armrest design and placement relative to the test platform are shown in Figure 5 below.

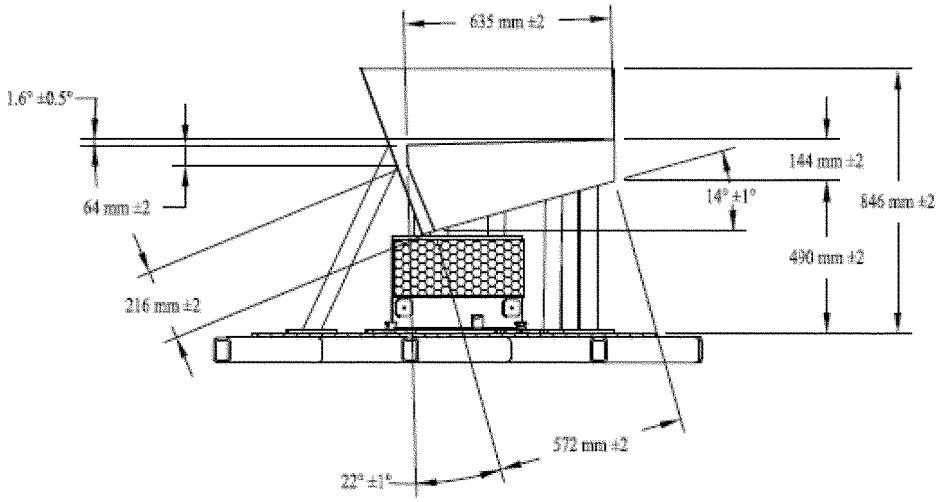

Figure 5. SISA Door and Armrest Dimensions

Armrest Stiffness

To have a door panel/armrest configuration in the SISA test buck with similar stiffness characteristics to those observed in the surveyed vehicles, we conducted FMH tests on various padding material combinations. Four of the 8 vehicles previously tested with the FMH to assess door panel force displacement characteristics also had impacts to the armrests to determine their armrest characteristics. The energy versus displacement curves of FMH impacts to the armrests indicated that the average armrest stiffness in the vehicles surveyed could be replicated on the SISA using 64 mm (2.5 in) of the foam we identified as ''stiff'' foam (United Foam #4) (see ''Rear Seat Door Stiffness'' section, *supra*) attached on top of 51 mm (2 in) of the ''average'' foam padding the door structure. *Id.*

In NHTSA's sensitivity analysis, we conducted sled tests with the Maxi Cosi Priori and the Graco Safe Seat 2 with the armrest/door configuration. The results of these tests were compared to those from door padding-only sled tests and from the actual vehicle tests. We found that the addition of the armrest tended to reduce the HIC_{15} values of the Q3s due to the early interaction of the ATD's pelvis resulting from the added armrest. Chest displacements also tended to be lower with the armrest present, although not as pronounced as for HIC_{15}.

NHTSA is proposing that the armrest/door configuration for the SISA consist of the 51 mm (2 in) ''average'' stiffness foam padding (Ethafoam 220) on the door and a 64 mm (2.5 in) ''stiff'' foam (United Foam #4) for the armrest. This configuration appears to be representative of the rear seat environment, and dummy responses with this armrest/door configuration were similar to those seen in vehicle crash tests (see Dynamic Validation of Sled Test section, *infra*).[77] Further, the stiff United Foam #4 also has a thickness of 64 mm (2.5 in) which is within the range of armrest thicknesses from surveyed vehicles.

Seating Position

The SISA bench seat consists of a single seating position representing a rear outboard seating position for simulating a near-side impact. The centerline of this outboard seating position is at a distance of 300 mm (11.8 in) measured laterally from the edge of the bench seat closest to the impacting door. NHTSA is proposing to install the child restraint centered on the SISA bench seating position. In addition, NHTSA is proposing that the front face of the armrest on the door be approximately 32 mm from the edge of the bench seat towards the child restraint system at the time the door assembly interacts with the SISA bench seat structure. Because of the prescribed position of the armrest (32 mm from the edge of the seat) and the CRS (centered 300 mm from the edge of the seat) at the time the door first interacts with the bench seat structure, the intruding door will contact CRSs that are wider earlier in the event than those that are narrower. This would result in higher door impact velocity to wide CRSs than to narrow CRSs. We believe this is representative of how different CRS designs will perform in a specific vehicle. However, we are requesting comment on whether the distance of the front face of the armrest from the edge of the seat at the time the sliding seat starts to accelerate should be kept constant or should be varied such that all CRSs, regardless of their width, contact the impacting door at the same time and with the same initial impact speed.

LATCH

We propose that the SISA be equipped with LATCH anchorages that are symmetrically located on either side of the centerline of this simulated

[77] Sullivan et al. (2011).

''outboard seating position'' of the SISA bench seat. The location of the top tether anchorage would be on the lower rear frame of the seat (similar to the typical location of a tether anchorage in captain's seats in minivans). The LATCH anchorages are shown in the drawings that have been placed in the docket for today's NPRM.

FMVSS No. 213 currently requires CRSs to be capable of being secured to a vehicle seat with the LATCH system,[78] and to meet the frontal crash requirements of the standard when using the LATCH system. Today's NPRM proposes that CRSs covered in this proposal, other than belt-positioning seats, must meet the side impact performance requirements when attached to the SISA with the lower LATCH attachments. We propose to test belt-positioning seats to the side impact protection requirements with Type II (lap and shoulder) belts.

We propose that the child restraint's top tether be attached during the side impact test when testing forward-facing CRSs that provide a tether. We are requesting comment on whether the standard should also require testing without the top tether attached for these forward-facing CRSs.

Comments are also requested on whether the standard should require CRSs to meet the proposed side impact requirements when attached to the SISA with a belt system, and on whether the belt system should be a Type I (lap) or a Type II (lap and shoulder) belt system.[79] The original Takata sled had a Type II belt system; NHTSA modified the test bench seat to incorporate child restraint anchorages and also modified the location of the Type II belt anchorages based on NHTSA's survey of vehicle rear seat geometry.[80] Preliminary tests conducted with CRSs attached to the sliding seat using the Type II belt system showed similar performance metrics to that obtained when the CRSs were attached using the child restraint anchorage system, suggesting that the method of CRS attachment has minimal effect on performance.

c. Dynamic Validation of the Sled Test

To determine if the sled test with the selected parameters satisfactorily simulates a small passenger vehicle side impact crash test, NHTSA conducted four FMVSS No. 214 MDB tests of a 2008 Nissan Sentra and 2008 Nissan Versa using the Q3s dummy and two CRS models (see Table 10). For the first test of the Sentra (Test #6634), the impact location was that specified in FMVSS No. 214. (In an FMVSS No. 214 MDB test, the MDB is positioned such that in a left side impact, the MDB's left forward edge (corner) impacts the struck vehicle 940 mm (37 inches) forward of the mid-point of the wheelbase.) In the remaining three tests, the impact location was moved 229 mm (9 in) rearward so that the MDB engaged most of the rear door instead of the front door, to provide for more direct contact of the MDB with the CRS. The side curtain air bags were disabled from the vehicle tests to allow for a direct comparison to the sled. (Sullivan (2009).)

TABLE 10—VEHICLE TEST SETUPS

Test No.	Vehicle model	Model class	Impact location	CRS	Dummy
6634	Sentra	Light PV	214	Graco Safe Seat Step 2	Q3s.
6635	Sentra	Light PV	214–229mm to rear	Graco Safe Seat Step 2	Q3s.
6636	Versa	Compact PV	214–229mm to rear	Graco Safe Seat Step 2	Q3s.
6637	Versa	Compact PV	214–229mm to rear	Maxi-Cosi Priori	Q3s.

Table 11 shows data from the vehicle tests. The technical report docketed with this NPRM presents a detailed analysis of these data. The sled type side impact test with a 10 degree angle, an armrest and a beltline height of 479 mm (18.8 in)[81] provided good representation of the vehicle, dummy, and CRS kinematics observed in the vehicle tests. In both sled and vehicle tests, the intruding door and armrest first engages the lower part of the CRS, causing the bottom of the CRS to move away from the door. This results in the top of the CRS tilting towards the door and contacting it. The child dummy is first engaged by the CRS through the pelvis, followed by the torso and lastly the head. The dummy's head rotates forward when it contacts the side wing of the CRS.

TABLE 11—VEHICLE AND SLED TESTS WITH THE GRACO SAFE SEAT STEP 2

Test No.	Vehicle model/sled test	HIC_{15}	Chest displacement (mm)	Neck tension newtons (N)	Spine Y acceleration (g)	Pelvic Y acceleration (g)
6634	Sentra	521	17	1054	89	71
6635	Sentra	518	12	1244	85	79
6636	Versa	414	14	1235	91	106
6904	Sled Test (10 degrees, Armrest and 479 mm beltline).	634	25	944	91	83
6905	Sled Test (10 degrees, Armrest and 479 mm beltline).	594	25	999	93	75

[78] See S5.9, FMVSS No. 213. Excluded from this requirement are car beds, child harnesses, and belt-positioning seats.

[79] FMVSS No. 213 currently does not use a Type II belt system. The agency tests CRSs for compliance with the frontal crash protection requirements using LATCH and a Type I (lap) belt system. NHTSA is researching the merits of changing the belt system on the standard seat assembly to Type II belts.

[80] Aram, et al., ''Vehicle Rear Seat Study—Technical Report, NHTSA, 2013,'' *supra.*

[81] The agency did not perform a sled test with a window sill height of 500 mm (19.6 in) with the Graco Safe Seat Step 2 or the Maxi Cosi Priori CRS models (tested in the vehicle crash tests), therefore, no dynamic comparison analysis was done. Based on the sensitivity analysis results with the two different window sill heights, the agency expects the magnitude of the head acceleration to be slightly higher but the timing and profile of the head and pelvis accelerations should be very similar to the tests with a window sill height of 479 mm (18.8 in).

The Q3s dummy responses in the modified Takata sled tests were compared to the three vehicle side impact crash tests. Peak pelvic and spine accelerations were similar but the magnitude of HIC_{15} and chest displacement in the sled tests were slightly higher than those in the vehicle tests. The differences in magnitude can be attributed to the differences in vehicle rear seat geometry and to that of the sled seat. The geometry of the sled seat was based on average characteristics of the vehicle fleet, and not based on the Nissan Sentra. In addition, differences in the arm position of the dummy in the vehicle and sled tests may have contributed to the higher chest deflection in the sled tests. The effect of the arm position on chest deflection is discussed in more detail in a later section of this preamble.

XII. Proposed Dynamic Performance

A 3 YO child test dummy and a 12 MO infant dummy have been tentatively selected for testing CRSs under the proposed side impact requirements.

a. Q3s Test Dummy

The agency has selected the Q3s dummy, representing a 3 YO child, for testing CRSs designed for children in a weight range that includes children weighing from 10 kg to 18 kg (22 lb to 40 lb). The 18 kg (40 lb) weight cut off would be identical to that of the frontal collision requirements of FMVSS No. 213 (see S7). For the frontal crash requirements, a Hybrid III 3 YO child ATD is used to test CRSs recommended for children weighing from 10 kg to 18 kg (22 lb to 40 lb). The agency tentatively concludes that the Q3s, weighing 14.5 kg (32 lb), would suitably represent children in the 10 kg to 18 kg (22 lb to 40 lb) range for side impact testing. The anthropometry of the Q3 (and the side impact adaptation Q3s) is based on the Child Anthropometry Database (CANDAT) for a 3 YO child compiled by the Netherlands Organization for Applied Scientific Research (TNO). CANDAT includes various characteristic dimensions and weights of children of different ages obtained from different regions in the world including United States, Europe, and Japan.

The Q3s dummy is a three-year-old child crash test dummy built on the platform of the standard Q3 dummy series with enhanced lateral biofidelity, durability and additional instrumentation for side impact testing. The Q3s dummy features a new head and a neck that has biofidelic lateral, and frontal performance. The ATD also has a deformable shoulder with shoulder deflection measurement capabilities, a new arm with improved flesh characteristics, a laterally compliant chest and a pelvis with improved upper leg flesh, floating hip cups, and a pubic load transducer.[82]

The agency began evaluating the Q3s in 2002. The evaluation has demonstrated good biofidelity, repeatability, reproducibility, and durability. We have tentatively selected the Q3s dummy for this NPRM because it is commercially available, and has shown to be durable and biofidelic for the intended application in the proposed FMVSS No. 213 side impact tests. Further discussion of the Q3s can be found in the NPRM proposing incorporation of the Q3s test dummy into 49 CFR Part 572, ''Anthropomorphic test devices,'' previously published.

The Q3s dummy accepts different types of instrumentation, including accelerometers and load cells among others. The instrumentation we propose using with the ATD are three uni-axial accelerometers at the head center of gravity (C.G.) and an InfraRed Telescoping Rod for Assessment of Chest Compression (IR–TRACC) in the thorax for measuring lateral chest deflection. The IR–TRACC is a deformation measurement tool that consists of an infrared LED emitter and an infrared phototransistor detector. The emitter and detector are enclosed at each end of a telescoping tube. The chest deformation is determined from the irradiance measured by the detector, which is inversely proportional to the distance of the detector from the emitter. The IR–TRACC is standard instrumentation in the Q3s dummy.

The enhanced biofidelity and instrumentation capabilities of the Q3s make it our preferred option for use in FMVSS No. 213. NHTSA has considered an alternative 3 YO child ATD, based on the Hybrid III design, for use in this NPRM. Our reasons for preferring the Q3s are discussed in the 49 CFR Part 572 NPRM.[83] We request comments on the alternative of using the Hybrid III-based 3 YO ATD instead of the Q3s.

Injury Criteria for Use With the Q3s

The agency analyzed NASS–CDS data average annual estimates (1995–2009) for AIS 2+ injuries to children 0 to 12 YO in rear seats. Data showed that the most common AIS 2+ injuries among children restrained in side impacts were to the head and face (55 percent), torso (chest and abdomen—29 percent), and upper and lower extremities (13 percent). Given the high frequency of head and thoracic injuries to children involved in side crashes reported in these data and in multiple studies,[84] the injury criteria proposed in this NPRM focus on the child occupant's head and thorax.

The agency is proposing to address the potential for head injuries by setting a maximum on the HIC value measured by the Q3s in the side impact test. HIC is used in FMVSS No. 213 and in all other crashworthiness FMVSSs that protect against adult and child head injury. However, while the current FMVSS No. 213 frontal impact requirement specifies an injury assessment reference value (IARV) of 1,000 measured in a 36 ms timeframe (36 ms for integrating head acceleration) (HIC_{36} = 1,000), we are proposing a HIC limit of 570 measured in a 15 ms timeframe (15 ms duration for integrating head resultant acceleration) (HIC_{15} = 570) when using the Q3s dummy in the side impact sled test. FMVSS No. 208, ''Occupant crash protection,'' uses HIC_{15} = 570 for the Hybrid III 3 YO dummy.[85]

We recognize that FMVSS No. 213's frontal impact performance requirement specifies a HIC_{36} IARV of 1,000 when using the CRABI and the Hybrid III 3 and 6 YO dummies in the standard's frontal impact test.[86] We also recognize that in a 2003 rulemaking responding to the TREAD Act, NHTSA considered adopting the FMVSS No. 208 scaled IARVs in FMVSS No. 213 but decided against doing so (68 FR 37620, 37649; June 24, 2003). CRSs were already providing high levels of crash performance in the field, yet frontal sled test data indicated that CRSs would not

[82] Carlson, M., Burleigh, M., Barnes, A., Waagmeester, K., van Ratingen, M. ''Q3s 3 Year Old Side Impact Dummy Development,'' 20th International Conference on the Enhanced Safety of Vehicles, Paper No. 07–0205, 2007. *http://www-nrd.nhtsa.dot.gov/pdf/esv/esv20/07-0205-O.pdf.* Last accessed on June 11, 2012.

[83] NHTSA found that the two dummies' heads and necks provided nearly equivalent biofidelity; however, in all other biofidelity test conditions—shoulder, thorax and pelvis—the Q3s exhibited significant advantages relative to the alternative HIII 3–YO design.

[84] See Craig, M., ''Q3s Injury Criteria,'' which is in the docket for this NPRM.

[85] In developing this NPRM, NHTSA has considered alternative HIC_{15} requirements of 400 and 800. The PRIA provides an assessment of benefits and costs of the HIC_{15} = 400 and 800 alternatives.

[86] The agency did not adopt the use of HIC as an injury measure for the Hybrid III 10–YO child dummy (HIII–10C) dummy in FMVSS No. 213 tests because CRSs tested with the HIII–10C dummy can produce high HIC values as a result of hard chin-to-chest contact, indicating an unacceptable risk of head injury, even though head injuries due to chin-to-chest contact are not occurring in the real world. (76 FR 11626; February 27, 2012.)

meet the FMVSS No. 208 scaled IARV limits. It was not known what modifications to CRSs were necessary for the restraints to meet the FMVSS No. 208 limits in the frontal configuration. In addition to questions about the practicability of modifying CRSs to meet the proposed IARVs and the safety need for such modifications, the agency decided that the cost increases resulting from the redesign—and the possible negative effect the cost increases could have on consumers' use of CRSs—were not justified. *Id.*

We tentatively conclude that today's proposed side impact test differs from FMVSS No. 213's frontal impact test such that the FMVSS No. 208 scaled IARV of HIC_{15} = 570 is reasonable for today's proposal. FMVSS No. 213's frontal impact test evaluates the performance of CRSs on a frontal impact sled buck that does not have a structure (representing a front seat) forward of the tested CRS on the bench seat. In contrast, in today's proposed side impact test, the test environment is set up so that ATD head contact with the CRS and the door is probable. Injurious contacts (such as head-to-door contacts) are of short duration (less than 15 ms) in this set-up and more appropriately addressed by HIC_{15} (15 millisecond duration for integrating head resultant acceleration) than HIC_{36}. For head impact accelerations with duration less than 15 ms, the computed value of HIC_{15} and HIC_{36} are generally equivalent. However, since the injury threshold level for HIC_{15} is 570 while that for HIC_{36} is 1,000, HIC_{15} is a more stringent requirement than HIC_{36} for short duration impacts and is better able to discern injurious impact events. On the other hand, for long duration accelerations without a pronounced peak such as those when the head does not contact any hard surfaces such as in the frontal FMVSS No. 213 test, the computed HIC_{15} value may be lower than the HIC_{36} value and the HIC_{36} computation may be a better representation of the overall head acceleration.

With regard to chest protection, the agency proposes a chest displacement IARV for the Q3s of 23 mm to evaluate CRS performance in a side environment. Mertz (2003) [87] presented lateral thoracic injury risk IARVs for deflection purely based on length-based scaling from adult cadaver/dummy response. Mertz suggested a limit of 23 mm for 3 YO lateral rib deflection. This was derived only through length-based scaling from the adult and represented roughly a 30 percent probability of AIS 3+ injury. This compared very well with length-based scaling of chest deflection data from 42 adult post-mortem human subject (PMHS) tests completed by the Medical College of Wisconsin (MCW) and published by Kuppa (2003).[88] This length-based scaling analysis of the MCW data is detailed in a technical report docketed along with this NPRM.[89] The results of that analysis found that a displacement of 23 mm represented a 33 percent risk of AIS 3+ injury. While Mertz and Craig used different and independent data sets, the rib deflection threshold at 30 percent risk of injury for the 3 YO child were similar and equal to 23 mm. Therefore, the agency proposes a chest displacement IARV of 23 mm to evaluate CRS performance with the Q3s.

NHTSA tentatively believes that there is not a need for a performance criterion that would prohibit head contact with the intruding door.[90] NHTSA's video analysis showed that 13 out of 19 forward-facing CRS models had head-to-door contact during the test. However, further analysis of the head acceleration time histories showed that the peak acceleration occurred before the head contacted the door. Six of the 13 models that had head-to-door contact had HIC_{15} values exceeding 570; these peak HIC_{15} values occurred prior to head contact with the door. This suggested that the peak head acceleration was the result of a previous impact, most likely the head contacting the side of the CRS at the time the CRS contacted the intruding door. (Four of the ''convertible'' CRS models tested in the forward-facing mode, were also tested in the rear-facing mode using the Q3s dummy; the results showed there was no head-to-door contact during these tests.)

Given that the head acceleration values computed during the time of head-to-door contact were lower than the peak head acceleration, we believe that the risk of head injury from head-to-door contacts for the 13 CRSs was much lower than the risk from the peak acceleration. For the above reasons, the agency has tentatively decided not to use a performance criterion based on head contact in tests with the Q3s dummy because HIC_{15} appears better able to discern between ''soft'' non-injurious contacts and ''hard'' injurious contacts, and thus would be a better predictor of head injury in the side impact test.

b. CRABI Dummy

The agency has tentatively selected the CRABI dummy (49 CFR Part 572, Subpart R) for testing CRSs designed to seat children in a weight range that includes weights up to 10 kg (22 lb). The 10 kg (22 lb) weight cut off would be identical to that of the frontal collision requirement of FMVSS No. 213 (see S7 of FMVSS No. 213), which specifies use of the CRABI to test CRSs recommended for children weighing from 5 kg to 10 kg (11 lb to 22 lb).

The CRABI was developed through the efforts of the Society of Automotive Engineers (SAE) Child Restraint Air Bag Interaction Task Force. The ATD is used in FMVSS No. 208 to test advanced air bag systems and in FMVSS No. 213.[91] The CRABI dummy is a frontal crash test dummy and is instrumented with head, neck and chest accelerometers. The CRABI represents a 12 MO infant. There is no infant test dummy available that is specially designed for side impact testing.

While the CRABI dummy is not a side impact dummy, the agency believes that it could be a useful tool to evaluate some aspects of CRS performance in side impacts. Children under 1 YO have the highest restraint use, so we believe that it is important for safety and for MAP–21 to evaluate the performance of the CRSs they use, even if the evaluation is limited to containment, structural integrity, and other related matters.

Performance Criteria for Use With the CRABI

NHTSA is proposing that the CRABI be used to measure head-to-door contact only, and not HIC_{15} or chest acceleration. We have concerns about the real world relevance of the HIC values measured during developmental side impact testing using the CRABI dummy. In 12 side tests performed with rear-facing CRSs using the CRABI dummy, nearly all of the CRSs exceeded the HIC_{15} injury threshold value of 390 (used in FMVSS No. 208). See Figure 6, below. Four ''convertible'' CRS models tested in rear-facing mode were also tested in forward-facing mode using the

[87] Mertz et al., ''Biomechanical and Scaling Bases for Frontal and Side Impact Injury Assessment Reference Values,'' 47th Stapp Car Crash Conference, 2003–22–0009, October 2003.

[88] Kuppa et al., ''Development of Side Impact Thoracic Injury Criteria and Their Application to the Modified ES–2 Dummy with Rib Extensions (ES–2re),'' 47th Stapp Car Crash Conference, October 2003.

[89] Craig, M., ''Q3s Injury Criteria,'' *supra.*

[90] Such a performance criterion for CRSs is currently being used in the Australian standard AS/NZS 1754, and the Australian CREP consumer information program.

[91] When the CRABI is used in the FMVSS No. 213 frontal impact test, CRSs must limit HIC_{36} to 1,000, chest g to 60 g, limit head excursion of the dummy, limit inclination of the restraint, have no injurious surfaces contactable by the ATD's head or torso, and maintain the CRS's structural integrity.

CRABI dummy and in these tests, 2 of the 4 CRSs exceeded the 390 HIC_{15} injury threshold. Tests with the CRABI showed a high rate of HIC_{15} failure, yet field experience of rear-facing seats indicate that the CRSs are very safe in side impacts and provide 5 times more protection against serious injury than forward-facing seats in side impacts.[92]

We hypothesize that a reason for the results using HIC_{15} as a performance criterion is that the CRABI dummy's shoulder and neck are not designed for lateral loading and this may influence head kinematics prior to contact with the CRS/door. Additionally, the CRABI head does not meet lateral biofidelity standards. Therefore, both the severity of the resulting head contacts and the response of the head to those contacts may not be representative of the real world.

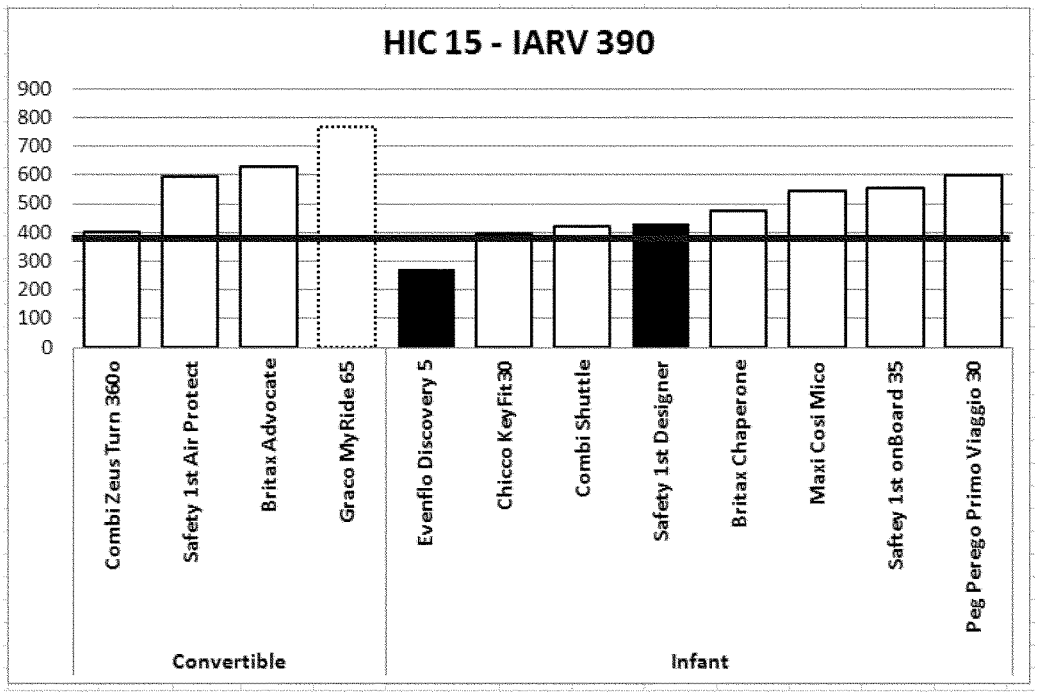

Figure 6 – HIC_{15} Values in Tests with CRABI Dummy in Rear Facing CRSs (Solid Black Outline=good side coverage and padding, Dashed Black Outline=good side coverage or padding, Solid Black=poor side coverage and padding)

On the other hand, we tentatively believe that the CRABI dummy would be suitable and should be used for assessing safety risks related to a CRS's ability to limit head-to-door contact in side crashes. Because the 0 to 12 MO age group has the highest restraint use of any age group, we seek to evaluate the performance of CRSs for this age group in side crashes even if such evaluation is limited to assessing head-to-door contact. Although the CRABI dummy may not be appropriate for use in measuring the potential for head injuries using HIC_{15}, the agency tentatively believes that the CRABI dummy could provide some other useful information evaluating child restraints for small children. That is, the CRABI could provide a worst-case assessment of injury risk in a side impact in terms of head-to-door contact. If the CRS were unable to prevent the ATD's head from contacting the door in the test, we believe such an outcome would be a reasonable indication of an unacceptable risk of head contact of children represented by the CRABI. Accordingly, NHTSA proposes head-to-door contact as a pass-fail criterion for assessing CRSs tested with the CRABI. We believe that this criterion will lead to improved side coverage. In our study, video analysis showed that 1 (Combi Shuttle) out of 12 rear-facing CRS models tested with the CRABI dummy had head-to-door contact during the test.

In addition, we tentatively believe that the CRABI dummy would be suitable and should be used for assessing a CRS's ability to maintain its structural integrity in side crashes when restraining 1 YO children. (Structural integrity requirements are discussed below.) We seek comment on the use of the CRABI dummy, and on the use of the proposed head-to-door contact pass-fail criterion.

c. Energy Absorption and Distribution

In the simulated side impact test, the CRS would be required to maintain system integrity when tested with the Q3s and with the CRABI. When a CRS is dynamically tested with the appropriate ATD, there could not be any complete separation of any load-bearing structural element of the CRS or any partial separation exposing surfaces with sharp edges that may contact an occupant. These requirements would reduce the likelihood that a child using the CRS would be injured by the collapse or disintegration of the system in a side crash or by contact with the interior of the passenger compartment or with components of the CRS.

Injury from contacting protrusions, such as the pointed ends of screws mounted in padding, would be prevented in a similar manner as that specified for the frontal crash test in FMVSS No. 213. The height of such

[92] Sherwood et al. (2007).

protrusions would be limited to not more than 9.5 mm (0.375 in) above any immediately adjacent surface. Also, contactable surfaces (surfaces contacted by the head or torso of the ATD) would not be permitted to have an edge with a radius of less than 6.35 mm (0.25 in), even under padding. Padding will compress in an impact and the load imposed on the child would be concentrated and potentially injurious.

XIII. Fleet Testing

a. Q3s Dummy

NHTSA tested 12 forward-facing and 5 rear-facing CRSs to estimate the performance of the fleet with the Q3s in the proposed test procedure.[93] Details of the test series are discussed in the technical report.

Applying the proposed injury criteria specified for the Q3s dummy (HIC_{15} ≤570, chest deflection ≤23 mm), the results of the fleet tests showed that the Q3s measured HIC_{15} greater than 570 in 7 of the 12 forward-facing CRSs tested. The Q3s measured chest deflection greater than 23 mm (0.91 in) in 3 of the 12 forward-facing CRSs tested. The ATD measured both HIC_{15} greater than 570 and chest deflection greater than 23 mm in 3 of the tests of the forward-facing CRSs.

For the 5 rear-facing CRSs tested, the results of the fleet tests showed that the Q3s measured HIC_{15} greater than 570 in 3 of the 5 rear-facing CRSs tested, and chest deflection greater than 23 mm (0.91 in) in 2 of the 5 tests. The ATD measured both HIC_{15} greater than 570 and chest deflection greater than 23 mm (0.91 in) in 1 of the 5 rear-facing CRSs tested. The test results are shown in Figure 7.

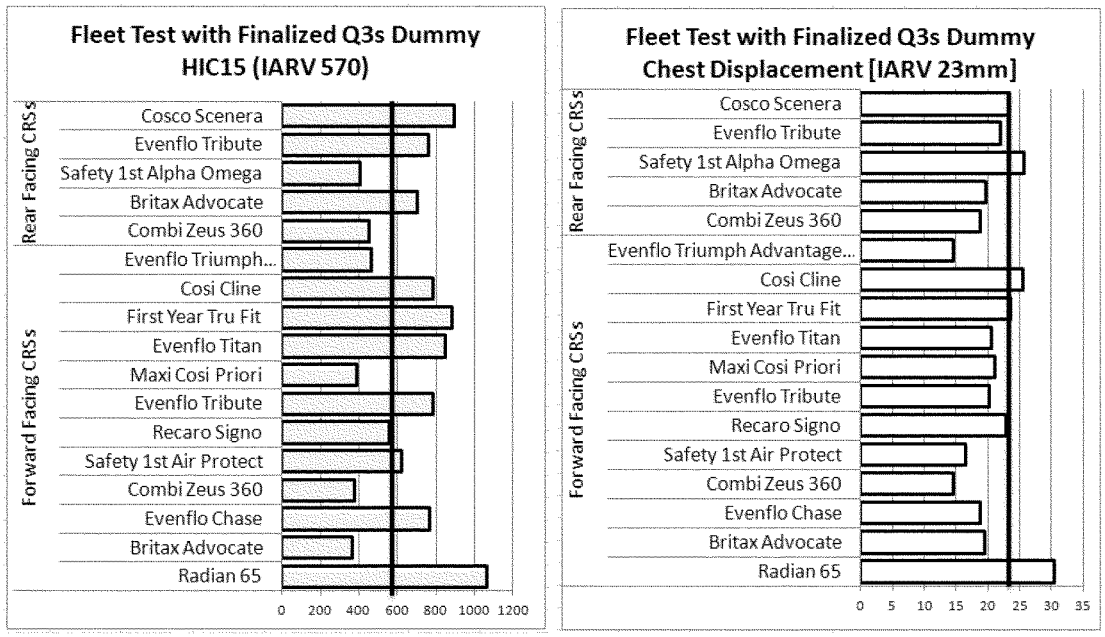

Figure 7 - Fleet Test Results: HIC_{15} (left) and Chest Displacement (right)

As to positioning the Q3s, we note that further analysis of the data showed that the chest displacements of the Q3s, tested in the same CRS model, were higher when the dummy's arm was positioned in line with the thorax, than when the arm was rotated upward exposing the thorax to direct contact with the intruding door. The agency is proposing an arm position at 25 degrees with respect to the thorax. The Q3s dummy's shoulder contains a detent to aid in positioning the arm at 25 degrees with respect to the thorax. We are requesting comment on the arm position.

When testing with the Q3s dummy in a rear-facing CRS, the legs of the dummy were extended upwards and rotated down until they were in contact with the SISA seat back. We are also requesting comment on the position of the Q3s dummy legs when testing rear-facing CRSs with this dummy.

b. CRABI Dummy

NHTSA tested 12 rear-facing CRSs to estimate the performance of the fleet with the CRABI. All tests were performed with the SISA mounted on a dynamic test platform so that the seat orientation reference line (SORL) of the seat was 10 degrees from the perpendicular direction of the test platform travel. CRSs were attached to the seat bench using LATCH. A 64 mm (2.5 in) thick armrest of ''stiff'' foam was added to the 50 mm (2 in) door panel foam. Twelve tests were performed with a window sill height at 479 mm (18.8 in). The test procedure proposed in today's NPRM was used for this fleet test except for the use of the NPACS foam instead of the ECE R.44 foam and a window sill height of 479 mm (18.8 in) instead of a 500 mm (19.6 in) window sill height. The NPACS foam was used on these series of tests, as previous testing appeared to show that cushion stiffness did not have a significant influence in the readings of the ATDs.

Three additional tests were performed with the beltline at 500 mm (19.6 in).[94]

[93] CRS models tested were a representative sample of seats available in the market.

[94] The seat cushion consisted of ECE R.44 foam.

Tests showed that the increase in window sill height did not significantly affect the performance of the rear-facing CRS using the CRABI. Models of CRSs for younger children generally positioned the head below a window sill height of 479 mm (18.8 in), so the CRSs will continue to be below the window sill when the window sill is at a height of 500 mm (19.6 in).

Using head-to-door contact as the performance criterion in the fleet tests, the results showed that the CRABI had head contact only with the Combi Shuttle model (1 out of 12 models). The Combi Shuttle model was retested and results were found to be repeatable. The test results are summarized in Table 12.

TABLE 12—FLEET TESTS RESULTS—CRABI

CRABI	Window sill @ 500 mm (19.6 in)	Window sill @ 479 mm (18.8 in)
Rear-facing	Contact	Contact
Combi Shuttle	* Contact	Contact.
Combi Shuttle	* Contact.	
Britax Advocate	No contact	No contact.
Combi Zeus 360		No contact.
Safety 1st Air Protect		No contact.
Graco My Ride		No contact.
Evenflo Discovery 5		No contact.
Chicco Key Fit 30		No contact.
Safety 1st Designer		No contact.
Britax Chaperone		No contact.
Maxi Cosi Mico		No contact.
Safety 1st OnBoard		No contact.
Peg Pereggo		No contact.

* Repeat tests to evaluate containment.

XIV. Countermeasure Assessment

The tests NHTSA performed during the development of the test procedure showed that some design characteristics such as side coverage (through head inserts or side structure/wings) can influence the values measured by the test dummy. As previously discussed, we examined each CRS with a seated Q3s dummy from a side view to evaluate if the head of the dummy was completely covered (obscured) by the side structure or wing insert or if it was partially visible. We rated designs as ''good'' (solid outline) when they had ''full'' side view coverage (dummy's head not visible, totally obscured). We considered the CRS designs as ''average'' (dashed outline) when 75 percent or more of the dummy's head was obscured by the side structure or wing insert. We considered a ''poor'' design (filled-in black) to be when less than 75 percent of the dummy's head was obscured by the side structure and/or head insert. Interestingly, test results showed that the CRSs with less side coverage (filled-in black) had the highest HIC_{15} values when tested with the beltline height at 479 mm (18.8 in) and at 500 mm (19.6 in). Results are depicted in Figures 8 and 9.

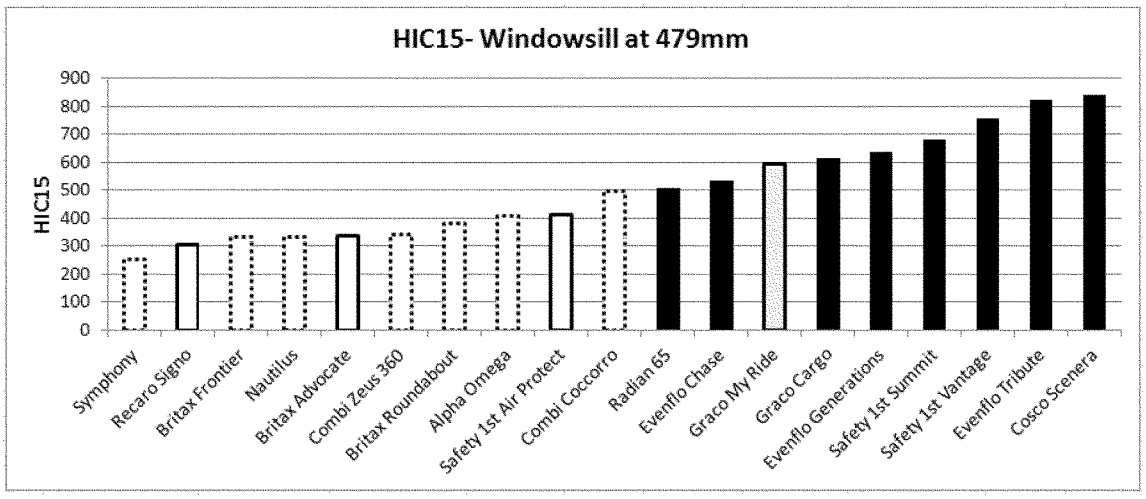

Figure 8 – HIC_{15} outcome for each CRS design @ 479 mm (18.8 in) windowsill (solid outline=good design, dashed outline=average design, filled-in black=poor design)

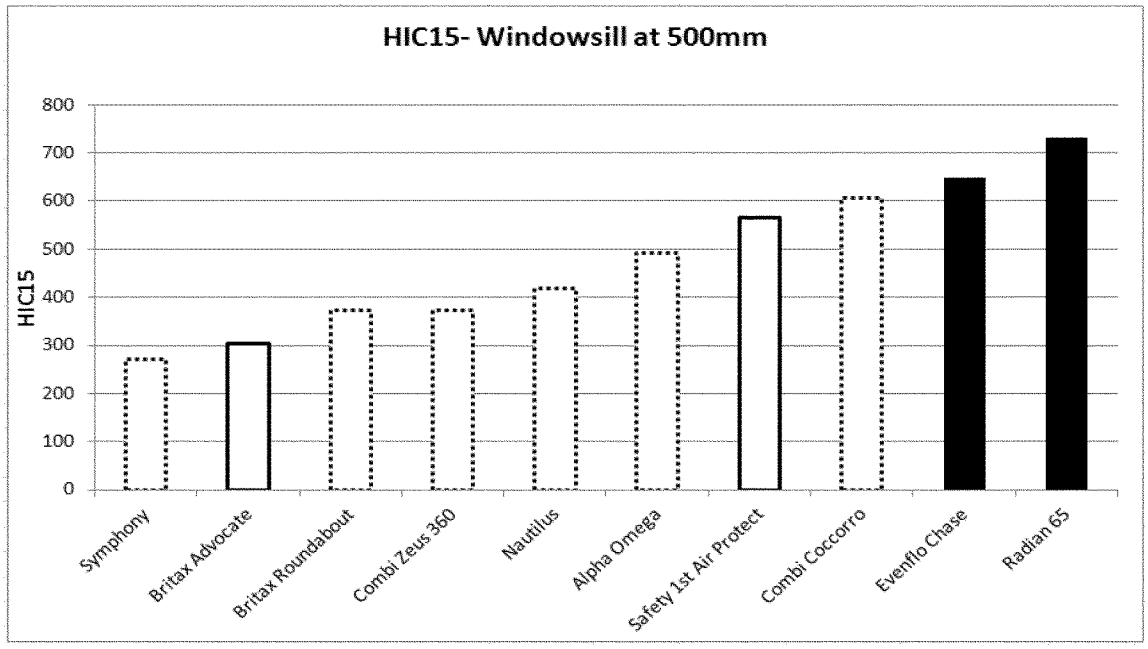

Figure 9 – HIC_{15} outcome for each CRS design @ 500 mm (19.6 in) windowsill (solid outline=good design, dashed outline=average design, filled-in black=poor design)

These test results indicate that ''good'' side coverage as a fundamental element of the child restraint design can help improve child restraint performance. This can be achieved by having more side structure with padding on the interior side and/or by adding padded head inserts.

We note that other features observed in the tested CRS models were a side air baffle (Britax Advocates) and an air pillow (Safety 1st Air Protect). According to the manufacturers of those CRSs, both the air baffle and the air pillow are supposed to absorb energy during impact. NHTSA was unable to verify these statements in our developmental program. We are interested in data showing that these or any other features are effective in improving CRS side impact performance.

XV. Petition Regarding Deceleration Sled System

Dorel Juvenile Group Petition for Rulemaking

On May 4, 2009, we received a petition from the Dorel Juvenile Group (DJG) requesting us to include in our side impact proposal a dynamic side impact test procedure that uses a deceleration sled, as an alternative or substitute to a procedure based on the acceleration sled. The petitioner noted that NHTSA's developmental work for this NPRM was done at VRTC, which uses an acceleration sled. Unlike an acceleration sled, a deceleration sled is first accelerated to a target velocity and then decelerated to a prescribed deceleration profile. The main event of interest occurs during the sled deceleration phase.

DJG stated that the primary reason the new side impact test procedure for CRSs should allow a deceleration sled as an option to the acceleration sled is because CRS manufacturers are familiar with the deceleration sled in the frontal impact context, and either have or have ready access to deceleration sled equipment. It further noted that the deceleration sled is less expensive to acquire and operate.

In its petition, DJG described work it conducted in collaboration with Kettering University to develop a CRS side impact sled test procedure using a deceleration sled (hereinafter referred to as the Dorel/Kettering test procedure). DJG's petition provided a description of the Dorel/Kettering test procedure and included preliminary sled test data simulating a New Car Assessment Program (NCAP) MDB side impact test.

According to DJG, the Dorel/Kettering test procedure employed a deceleration sled with a simulated door rigidly mounted to it (bullet sled) which impacted a target sled (bench seat with a CRS installed on it) that was initially stationary on a pair of low friction bearings, separate from the sled. In the procedure, the sled was accelerated to the impact velocity of the NCAP MDB barrier face. The petitioner stated that the sled decelerator was tuned to match the MDB deceleration profile. The target sled was positioned such that contact of the honeycomb on the target sled with the door structure was coincident with the initiation of sled deceleration. The characteristics of the honeycomb attached to the target sled were selected such that its crushing resulted in the desired target sled acceleration profile (acceleration profile of the impacted vehicle in a side NCAP test).

DJG provided data from four baseline sled tests, using a Hybrid III 3 YO child dummy with a modified neck (HIII–3Cs) in a CRS attached to the target sled, which were conducted to establish test parameters such as the bullet and target sled velocities. DJG also presented results to demonstrate the consistency and accuracy of the bullet and target sled velocities. In addition, DJG conducted a sensitivity analysis of various test parameters and said that the only parameter affecting the target sled was the honeycomb crushable area.

DJG stated that it later conducted sled tests with the HIII–3Cs dummy in a Maxi Cosi Priori and a Safety 1st 3-in-1 forward-facing child restraint and compared the results with tests conducted by NHTSA's VRTC, which used an acceleration sled with the HIII–3Cs dummy in the same child restraints. According to DJG, the comparison showed that even though there were

some differences in the methods, sled setups, and dummy neck hardware, the Dorel/Kettering target sled kinematics were comparable to that of the VRTC acceleration sled sliding seat, including the rate of acceleration, peak acceleration, and pulse duration. In addition, DJG noted that the dummy response duration and the impacting speed in the two sled systems were similar. Based on these data, DJG concluded that the Dorel/Kettering deceleration test procedure ''complements'' the VRTC acceleration sled test procedure and requested that the Dorel/Kettering deceleration test method be included in the proposal for a new side impact test in FMVSS No. 213.

The DJG petition, along with the test data, is available in the docket of this NPRM.

Discussion of Petition

After analyzing the petitioner's data, we are unable to conclude that the Dorel/Kettering test procedure complements, i.e., is comparable to, the Takata procedure we evaluated on the acceleration sled. While the Dorel/Kettering test procedure appears to represent the intruding door velocity profile reasonably well, it does not sufficiently estimate the change in velocity of the passenger compartment as does the Takata acceleration sled procedure. The Dorel/Kettering test procedure does not include oblique side impacts or a representative armrest to the intruding door. In addition, the resultant head acceleration, HIC, upper neck forces and moments, pelvic resultant acceleration, and resultant spine acceleration of the HIII–3Cs dummy were consistently lower in the Dorel/Kettering tests than in the acceleration sled tests using the same CRS, door impact velocity, and similar type of dummy.[95] DJG has also not presented any data demonstrating that the dummy responses in the Dorel/Kettering sled tests are similar to those observed in vehicle crash tests. For these reasons, we believe that the Dorel/Kettering test procedure needs further development to represent the crash environment experienced by children in child restraints in near-side impacts in a manner comparable to the Takata procedure evaluated by the agency on the acceleration sled.

We note, however, that one of the strengths of the Takata test procedure is its simplicity and apparent versatility for application on an acceleration or a deceleration sled system. We believe that the provisions of the proposed test procedure, specified in the regulatory text, can be used to conduct the test on either an acceleration or a deceleration sled. Therefore, we do not believe there is a need to include a new test procedure expressly applicable to a deceleration sled in this proposal, as DJG requested.

It is our desire that the proposed test procedure be specified in a way that it can be conducted on an acceleration or a deceleration sled. The agency is planning to evaluate the repeatability and reproducibility of the proposed sled test procedure in different laboratories. We are interested in comments on what parameters, additional to the proposed specifications, should be specified to reproduce the proposed test procedure on a deceleration sled.

In any event, we note that under the National Traffic and Motor Vehicle Safety Act, child restraint manufacturers are required to certify the compliance of their child restraints with the applicable FMVSSs. The Safety Act does not require manufacturers to certify their products using the test procedures specified in the applicable safety standard. Instead, the safety standard sets forth the procedures that NHTSA will take to conduct compliance tests. In the event of a noncompliance with an FMVSS, NHTSA will ask the manufacturer the basis for its certification, and will review the data upon which the certification was made. Depending on the situation, the information used for the certification could be from a sled test matching the test specified in the standard, a comparable sled test providing valid and accurate results, or it could be from entirely different method of inquiry as long as a good faith certification could be made. Thus, if FMVSS No. 213 were to specify a test that describes an acceleration sled system, that would not preclude a manufacturer from using a deceleration sled to test and certify its child restraints. Accordingly, since the FMVSSs do not need to incorporate a specific test procedure preferred by a manufacturer for the manufacturer to be able to use the test procedure as its chosen basis for certification, the petitioner's requested action is not necessary. For these reasons, the petition is denied.

XVI. Costs and Benefits

There are approximately 7.42 million child restraints sold annually for children weighing up to 40 lb. These child restraints are composed of rear-facing infant seats, convertible seats (seats that can be used rear-facing and forward-facing), toddler seats (seats with harnesses, used only forward-facing), and combination seats (seats that can be used from forward-facing to booster mode). Of this total, it is estimated that there are approximately 2.73 million infant seats, 2.76 million convertible/toddler seats and 1.93 million combination seats. These sales estimates are based on sales in calendar year 2011.

Based on our sled test data, we estimate that approximately 80 percent of rear-facing infant seats (2.18 million) would need larger wings (padded side structure) and/or additional padding, and that similar countermeasures would be needed for 58.3 percent of the convertible/toddler seats (1.6 million) and 58.3 percent of combination seats (1.1 million). The retail cost of padding for rear-facing seats is estimated to be $0.66 per CRS. Accordingly, we estimate that the annual consumer cost for 2.18 million rear-facing CRSs that do not already comply with this test would be $1.441 million. The retail cost of padding for convertible/toddler seats that do not already comply with this test is estimated to be approximately $0.82 per CRS, so the annual consumer cost for 1.6 million convertible/toddler seats would be $1.321 million. The retail cost of padding for combination seats that do not already comply with this test is estimated to be approximately $0.82 per CRS, so the annual consumer cost for 1.1 million combination CRSs would be $0.925 million. The total annual consumer cost for the CRSs is estimated to be approximately $3.687 million. Distributing this total cost to all child restraints sold annually for children weighing up to 40 lb (7.42 million child restraints) results in an average cost of $0.50 per child restraint. Comments are requested on these calculations.

This NPRM proposes to apply the side impact protection requirements to belt-positioning seats designed for children in a weight range that includes weights up to 18 kg (40 lb) to improve the protection of children seated in such CRSs. Applying the side impact protection requirements to more children than less is consistent with MAP–21. We do not have test data that can be used to estimate the countermeasures needed on belt-positioning seats to meet the proposed side impact protection requirements. Comments are requested on the countermeasures needed by belt-positioning seats to meet side impact requirements when tested with the Q3s.

Since CRSs sold for children weighing more than 18 kg (40 lb) would be excluded from the proposed side impact protection requirements, an approach available at no additional cost to manufacturers would be to re-label the

[95] The Dorel/Kettering test procedure has not been evaluated using the Q3s child dummy.

belt-positioning seat as not recommended for children weighing less than 18 kg (40 lb). We find this approach to be desirable in that it is aligned with NHTSA's view [96] that children under age 4 are more protected in a CRS with a harness than in a belt-positioning seat. Moreover, the labeling change would increase the likelihood that children would be restrained by CRSs that meet side impact protection requirements up to 18 kg (40 lb) (until about 4 years in age). Regardless of whether a manufacturer re-labels the belt-positioning seat to restrict use of the belt-positioning seat to children weighing over 18 kg (40 lb) or designs a belt-positioning seat to meet the proposed requirements, the effect of the proposed requirement would be to improve the side impact protection to children weighing less than 18 kg (40 lb).

We believe that there will be no lost sales due to the change in the booster seat label. There are no boosters on the market sold only for children from 30 to 40 lb. Boosters are sold for children with a starting weight of 30 or 40 lb, to a maximum weight of 60, 70, 80 or more pounds. Those that are sold for children with a starting weight of 30 lb will just be relabeled to have the minimum weight start at 40 lb. Children riding in harnessed toddler seats will continue using the toddler seat until they graduate to a booster seat at a minimum weight of 40 lb. Similarly, combination seats that are sold for use with younger children (with a harness) and older children (as a booster) will continue to be marketed to the same children as before the rule. The only change resulting from the new label would be that the booster seat mode would not be recommended for use until the child reaches 40 lb. Comments are requested on this issue.

We estimate that 36.7 non-fatal injuries (MAIS 1–5) to children in rear-facing child restraints annually would be prevented by the proposed requirements. In addition, 5.2 fatalities and 27.6 non-fatal injuries to children in forward-facing child restraints annually would be prevented by the proposed requirements. We have not estimated the annual benefits for children in the weight range 13.6–18 kg (30–40 lb) who are restrained in belt-positioning seats because we have not estimated the countermeasures needed. However, we believe that the benefits of belt-positioning seats with improved side impact protection for children weighing 13.6–18 kg (30–40 lb) are very small since FARS and NASS–CDS data files indicate very few injuries in side impact crashes to this population of children in belt-positioning seats.[97] The total benefits of this proposed rule would be 5.2 fatalities and 64 MAIS 1–5 injuries prevented, which amount to 18.3 equivalent lives saved per year.[98] The equivalent lives and the monetized benefits were estimated in accordance with guidance issued February 28, 2013 by the Office of the Secretary [99] regarding the treatment of value of a statistical life in regulatory analyses. The PRIA, available in the docket for this NPRM, details the methodology for estimating costs, benefits, and net benefits resulting from this proposed rule. The monetized net benefits for this proposed rule were estimated to be $178.9 million at 3 percent discount rate and $162.0 million at 7 percent discount rate in 2010 dollars.

The agency estimates that the cost of conducting the test described in the proposed rule would be approximately $1,300. We estimate that 96 CRS models comprise the 7.42 million CRSs sold annually that are subject to this NPRM. The subject CRSs are rear-facing CRSs, and convertible, toddler, and combination CRSs designed for children weighing up to 18 kg (40 lb). Of the 96 CRS models, 31 models are infant seats, 50 models are convertible seats, and 15 models are toddler and combination seats. The infant seats would involve one sled test with the 12 MO CRABI, the convertible seats would involve 3 sled tests (2 sled tests in the rear-facing mode with the 12 MO CRABI and the Q3s and 1 sled test in forward-facing mode with the Q3s), and the toddler and combination seats would involve 1 sled test with the Q3s. Therefore, we estimate that, assuming manufacturers would be conducting the dynamic test specified in the proposed rule (or a similar test) to certify their child restraints to the new side impact requirements, overall they would conduct 196 sled tests for the current 96 models available in the market, for an annual testing cost of $254,800. This testing cost, distributed among the 7.42 million CRSs sold annually, with an average model life of 5 years, is less than $0.01 per CRS.

XVII. Effective Date

The agency is proposing a lead time of 3 years from date of publication of the final rule. This means that CRSs manufactured on or after the date 3 years after the date of publication of the final rule must meet the side impact requirements. We propose to permit optional early compliance with the requirements beginning soon after the date of publication of the final rule.

Note that section 31501 of MAP–21 states that not later than 2 years after the date of enactment of the Act (which was July 6, 2012), the Secretary shall issue a final rule amending FMVSS No. 213 regarding side impact protection. Section 31505 of MAP–21 states that if the Secretary determines that any deadline for issuing a final rule under the Act cannot be met, the Secretary shall provide an explanation for why such deadline cannot be met and establish a new deadline for the rule.

We believe there is good cause for providing 3 years lead time. CRS manufacturers will have to gain familiarity with the new test procedures and the new Q3s dummy, assess their products' conformance to the FMVSS No. 213 side impact test, and possibly incorporate changes into their designs. We believe that 3 years lead time would give manufacturers sufficient time to design CRSs that comply with the side impact requirements.

XVIII. Regulatory Notices and Analyses

Executive Order (E.O.) 12866 (Regulatory Planning and Review), E.O. 13563, and DOT Regulatory Policies and Procedures

The agency has considered the impact of this rulemaking action under E.O. 12866, E.O. 13563, and the Department of Transportation's regulatory policies and procedures. This rulemaking is considered ''significant'' and was reviewed by the Office of Management and Budget under E.O. 12866, ''Regulatory Planning and Review.''

The NPRM proposes to amend FMVSS No. 213 to adopt side impact performance requirements for child restraint systems designed to seat children in a weight range that includes weights up to 18 kg (40 lb). The proposal would specify a side impact test in which the child restraints must protect the occupant in a dynamic test simulating a vehicle-to-vehicle side impact. The side impact test would be additional to the current frontal impact tests of FMVSS No. 213.

We estimate that the annual cost of the proposed rule would be

[96] *http://www.safercar.gov/parents/RightSeat.htm.* Last accessed August 7, 2012. See also PRIA, pp. 19–20.

[97] This is because only a small percentage of children in this weight range are restrained in belt-positioning seats. A Safe Kids USA survey in the first quarter of 2012 at Child Passenger Safety Technician (CPST) seat check stations indicated that only 10 percent of children in the weight range 13.6–18 kg (30–40 lb) were in belt-positioning seats.

[98] This estimate assumes that the proposed changes will have the same level of effectiveness in preventing injuries to children in misused seats as estimated for children in properly used seats.

[99] *http://www.dot.gov/sites/dot.dev/files/docs/VSL%20Guidance%202013.pdf.*

approximately $3.7 million. The countermeasures may include larger wings (side structure) and padding with energy-absorption characteristics that have a retail cost of approximately $0.50 per CRS.[100] We estimate that the proposed rule would prevent 5.2 fatalities and 64 MAIS 1–5 non-fatal injuries annually. The annual net benefits are estimated to be $162.0 million (7 percent discount rate) to $178.9 million (3 percent discount rate).

In developing this NPRM, NHTSA has considered HIC_{15} requirements of 400 and 800 as alternatives to the preferred proposal of HIC_{15} = 570.[101] The PRIA accompanying this NPRM provides an assessment of benefits and costs of the HIC_{15} = 400 and 800 alternatives.

Of the alternatives presented for HIC_{15}, NHTSA's preferred alternative is an injury threshold of 570. We tentatively conclude that this threshold value achieves a reasonable balance of practicability, safety, and cost. The HIC_{15} = 570 threshold is used in FMVSS No. 208, ''Occupant crash protection,'' for the 3-year-old child dummy. It is a scaled threshold based on FMVSS No. 208's criterion for the 50th percentile adult male dummy, which was adjusted to the 3-year-old using a process that accounts for differences in geometric size and material strength. HIC_{15} of 570 corresponds to an 11 percent risk of AIS 3+ injury and a 1.6 percent risk of fatality. We tentatively conclude that the 570 scaled maximum would protect children in child restraints from an unreasonable risk of fatality and serious injury in side impacts.

Comparing the three alternatives (at the 7 percent discount rate), we find that an 800 HIC_{15} limit results in: (a) Many fewer equivalent lives saved than the proposed 570 HIC_{15} limit (7.24 vs. 18.26); (b) higher cost per equivalent life saved ($488,000 vs. $242,000); and, (c) lower net benefits ($63 million vs. $162 million). Thus, on all three measures, 800 HIC_{15} appears inferior to the proposed 570 HIC_{15}.

The 400 HIC_{15} alternative results in: (a) More equivalent lives saved than the proposed 570 HIC_{15} limit (28.87 vs. 18.26); higher cost per equivalent life saved ($314,000 vs. $242,000); and, (c) higher net benefits ($250 million vs. $162 million). Thus, on two of the three measures, at first glance 400 HIC_{15} has appeal compared to the proposed 570 HIC_{15} limit.

However, the agency's preferred alternative is 570 HIC_{15} because we are concerned about the effect of a 400 HIC_{15} limit on child restraint design and use. In the analysis we performed for this NPRM, we assumed that padding alone would be insufficient to meet a 400 HIC_{15} limit; we assumed that the 6 child restraints we tested would need a theoretical kind of structural improvement to the side of the seats to meet a 400 HIC_{15} limit. However, we have not proven out that the structural improvements we assumed would in fact be enough to meet the 400 HIC_{15} limit. Thus, there is some uncertainty on the agency's part whether the structural modifications can be implemented to meet the 400 HIC_{15} criterion at the cost we assumed.

We also believe that another means of meeting a 400 HIC_{15} limit would be to increase the thickness of the padding used in the child restraint. We are concerned that thicker padding around the head area could reduce the space provided for the child's head, which may make the child restraint seem, to parents and other caregivers, too confining for the child. The restricted space for the child's head could in fact reduce the ability of the seated child to move his or her head freely. Those factors could affect acceptability and use of the harness-equipped age-appropriate child restraints by consumers. Alternatively, if manufacturers decided to increase the thickness of the padding in the head area and widen the CRS to retain the current space between the child's head and side padding, the child restraint would have to be made wider and heavier. Again, this might affect the overall use of the child restraint.

Considering all of these factors, NHTSA has chosen 570 HIC_{15} as the best overall proposal with known consequences that can be met with a reasonable thickness of padding alone.

Regulatory Flexibility Act

Pursuant to the Regulatory Flexibility Act (5 U.S.C. 601 et seq., as amended by the Small Business Regulatory Enforcement Fairness Act (SBREFA) of 1996) whenever an agency is required to publish a notice of proposed rulemaking or final rule, it must prepare and make available for public comment a regulatory flexibility analysis that describes the effect of the rule on small entities (i.e., small businesses, small organizations, and small governmental jurisdictions), unless the head of an agency certifies the rule will not have a significant economic impact on a substantial number of small entities. Agencies must also provide a statement of the factual basis for this certification.

I certify that this proposed rule would not have a significant economic impact on a substantial number of small entities. NHTSA estimates there to be 29 manufacturers of child restraints, none of which are small businesses. Based on our fleet testing, we believe that most of the CRSs that would be subject to the proposed side impact requirements would meet the proposed requirements without a need to modify the CRS. For rear-facing infant seats and forward-facing restraints with harnesses that need to be modified, the agency estimates that the average incremental costs to each child restraint system would be only $0.50 per unit to meet the proposed rule. This incremental cost would not constitute a significant economic impact. Further, the incremental cost is not significant compared to the retail price of a child restraint system for infants and toddlers, which is in the range of $45 to $350. These incremental costs, which are very small compared to the overall price of the child restraint, can ultimately be passed on to the purchaser.

For belt-positioning seats that do not meet the proposed side impact requirements, the simplest course for a manufacturer would be to re-label the restraint so that it is marketed for children not in a weight class that would subject the CRS to the proposed requirements. That is, the CRSs could be marketed as belt-positioning seats for children weighing more than 18 kg (40 lb), instead of for children weighing above 13.6 kg (30 lb).[102]

The agency believes that the cost of conducting the test described in the proposed rule (estimated at $1,300) spread over the number of units sold of that child restraint model would be very small, especially when compared to the

[100] The agency believes that the cost of a compliance test (estimated at $1,300) spread over the number of units sold of that child restraint model is very small, especially when compared to the price of a child restraint. We estimate that 96 CRS models comprise the 5.5 million rear-facing CRSs and forward-facing convertible and combination CRSs (designed for children weighing up to 18 kg (40 lb)) sold annually, which have an average model life of 5 years. Therefore, the annual cost of testing new CRS models would be $254,800. This testing cost distributed among the 5.5 million CRSs sold annually would be less than $0.01 per CRS.

[101] The agency analyzed different values for HIC_{15} because head injuries are the major cause of fatalities of children in side impacts. Real word data of side impacts involving CRS-restrained children indicate that 55–68 percent of MAIS 2+ injuries are to the head, while only 22–29 percent are to the chest. We determined that changes in the HIC_{15} injury threshold would have a significantly higher effect on the benefit/costs resulting from this rulemaking than would changes to the chest deflection injury threshold. For this reason, alternatives to the proposed chest deflection injury threshold (23 mm) were not examined.

[102] Currently, FMVSS No. 213 prohibits manufacturers from recommending belt-positioning seats for children weighing less than 13.6 kg (30 lb).

price of a child restraint. We estimate that 96 CRS models comprise the 7.42 million rear-facing CRSs and forward-facing convertible and combination CRSs sold annually. The average model life is estimated to be 5 years. Therefore, we estimate that, assuming manufacturers would be conducting the dynamic test specified in the proposed rule (or a similar test) to certify their child restraints to the new side impact requirements, the annual cost of testing new CRS models would be $254,800. This testing cost, distributed among the 7.42 million CRSs sold annually with an average model life of 5 years, would be less than $0.01 per CRS.

National Environmental Policy Act

NHTSA has analyzed this proposed rule for the purposes of the National Environmental Policy Act and determined that it would not have any significant impact on the quality of the human environment.

Executive Order 13132 (Federalism)

NHTSA has examined today's proposed rule pursuant to Executive Order 13132 (64 FR 43255, August 10, 1999) and concluded that no additional consultation with States, local governments or their representatives is mandated beyond the rulemaking process. The agency has concluded that the rulemaking would not have sufficient federalism implications to warrant consultation with State and local officials or the preparation of a federalism summary impact statement. The proposed rule would not have ''substantial direct effects on the States, on the relationship between the national government and the States, or on the distribution of power and responsibilities among the various levels of government.''

NHTSA rules can preempt in two ways. First, the National Traffic and Motor Vehicle Safety Act contains an express preemption provision: When a motor vehicle safety standard is in effect under this chapter, a State or a political subdivision of a State may prescribe or continue in effect a standard applicable to the same aspect of performance of a motor vehicle or motor vehicle equipment only if the standard is identical to the standard prescribed under this chapter. 49 U.S.C. 30103(b)(1). It is this statutory command by Congress that preempts any non-identical State legislative and administrative law addressing the same aspect of performance.

The express preemption provision described above is subject to a savings clause under which ''[c]ompliance with a motor vehicle safety standard prescribed under this chapter does not exempt a person from liability at common law.'' 49 U.S.C. 30103(e) Pursuant to this provision, State common law tort causes of action against motor vehicle manufacturers that might otherwise be preempted by the express preemption provision are generally preserved. However, the Supreme Court has recognized the possibility, in some instances, of implied preemption of such State common law tort causes of action by virtue of NHTSA's rules, even if not expressly preempted. This second way that NHTSA rules can preempt is dependent upon there being an actual conflict between an FMVSS and the higher standard that would effectively be imposed on motor vehicle manufacturers if someone obtained a State common law tort judgment against the manufacturer, notwithstanding the manufacturer's compliance with the NHTSA standard. Because most NHTSA standards established by an FMVSS are minimum standards, a State common law tort cause of action that seeks to impose a higher standard on motor vehicle manufacturers will generally not be preempted. However, if and when such a conflict does exist—for example, when the standard at issue is both a minimum and a maximum standard—the State common law tort cause of action is impliedly preempted. See *Geier* v. *American Honda Motor Co.,* 529 U.S. 861 (2000).

Pursuant to Executive Order 13132 and 12988, NHTSA has considered whether this proposed rule could or should preempt State common law causes of action. The agency's ability to announce its conclusion regarding the preemptive effect of one of its rules reduces the likelihood that preemption will be an issue in any subsequent tort litigation.

To this end, the agency has examined the nature (e.g., the language and structure of the regulatory text) and objectives of today's proposed rule and finds that this proposed rule, like many NHTSA rules, would prescribe only a minimum safety standard. As such, NHTSA does not intend that this proposed rule would preempt state tort law that would effectively impose a higher standard on motor vehicle manufacturers than that established by today's proposed rule. Establishment of a higher standard by means of State tort law would not conflict with the minimum standard proposed here. Without any conflict, there could not be any implied preemption of a State common law tort cause of action.

Civil Justice Reform

With respect to the review of the promulgation of a new regulation, section 3(b) of Executive Order 12988, ''Civil Justice Reform'' (61 FR 4729, February 7, 1996) requires that Executive agencies make every reasonable effort to ensure that the regulation: (1) Clearly specifies the preemptive effect; (2) clearly specifies the effect on existing Federal law or regulation; (3) provides a clear legal standard for affected conduct, while promoting simplification and burden reduction; (4) clearly specifies the retroactive effect, if any; (5) adequately defines key terms; and (6) addresses other important issues affecting clarity and general draftsmanship under any guidelines issued by the Attorney General. This document is consistent with that requirement.

Pursuant to this Order, NHTSA notes as follows. The preemptive effect of this proposed rule is discussed above. NHTSA notes further that there is no requirement that individuals submit a petition for reconsideration or pursue other administrative proceeding before they may file suit in court.

Paperwork Reduction Act (PRA)

Under the PRA of 1995, a person is not required to respond to a collection of information by a Federal agency unless the collection displays a valid OMB control number. In this notice of proposed rulemaking, we propose no ''collections of information'' (as defined at 5 CFR 1320.3(c)).

National Technology Transfer and Advancement Act

Under the National Technology Transfer and Advancement Act of 1995 (NTTAA)(Public Law 104–113), all Federal agencies and departments shall use technical standards that are developed or adopted by voluntary consensus standards bodies, using such technical standards as a means to carry out policy objectives or activities determined by the agencies and departments. Voluntary consensus standards are technical standards (e.g., materials specifications, test methods, sampling procedures, and business practices) that are developed or adopted by voluntary consensus standards bodies, such as the International Organization for Standardization (ISO) and the Society of Automotive Engineers (SAE). The NTTAA directs us to provide Congress, through OMB, explanations when we decide not to use available and applicable voluntary consensus standards.

As explained above in this preamble, NHTSA reviewed the procedures and

regulations developed globally to dynamically test child restraints in the side impact environment. Except for the Takata test procedure, the procedures and regulations did not replicate all of the dynamic elements of a side crash that we sought to include in the side impact test or were not sufficiently developed for further consideration.

NHTSA considered AS/NZS 1754 for implementation into FMVSS No. 213 but did not find it acceptable, mainly because that it does not simulate the intruding door, which we believe is an important component in the side impact environment. In addition, AS/NZS 1754 does not account for a longitudinal component, which we also believe to be an important characteristic of a side crash. (As noted above, NHTSA's 2002 ANPRM, *supra,* was based on AS/NZS 1754. Commenters to the ANPRM believed that a dynamic test should account for some degree of vehicle intrusion into the occupant compartment.) Australia's CREP test also was limited by its lack of an intruding door, which is a component that is important in the side impact environment.

Germany's ADAC test procedure lacks an intruding door. While the ISO/TNO test procedure accounts for the deceleration and intrusion experienced by a car in a side impact crash, one of its limitations is that the angular velocity of the hinged door is difficult to control, which results in poor repeatability. In addition, these methods do not include a longitudinal velocity component to the intruding door, which is present in most side impacts and which, we believe, should be replicated in the FMVSS No. 213 test. NHTSA considered the EU's test procedure but decided not to pursue it, since the test is of lower severity than the crash conditions we wanted to replicate and of lower severity than the FMVSS No. 214 MDB side impact crash test of a small passenger vehicle. Moreover, the test procedure is only intended for evaluating CRSs with rigid ISOFIX attachments, which are not available on CRSs in the U.S. Further, the sliding anchors do not seem to produce a representative interaction between the door and CRS during a side impact, and may introduce variability in the test results. The NPACS consumer program is still undergoing development and the details of the sled test procedure and dummies are not available.

We note that NHTSA has based the side impact test proposal on a test procedure that was developed by Takata, a manufacturer in the restraint industry. By so doing, NHTSA has saved agency resources by making use of pertinent technical information that is already available. We believe this effort to save resources is consistent with the Act's goal of reducing when possible the agency's cost of developing its own standards.

Unfunded Mandates Reform Act

Section 202 of the Unfunded Mandates Reform Act of 1995 (UMRA), Public Law 104–4, requires Federal agencies to prepare a written assessment of the costs, benefits, and other effects of proposed or final rules that include a Federal mandate likely to result in the expenditure by State, local, or tribal governments, in the aggregate, or by the private sector, of more than $100 million annually (adjusted for inflation with base year of 1995). Adjusting this amount by the implicit gross domestic product price deflator for the year 2010 results in $136 million (110.993/81.606 = 1.36). This NPRM would not result in a cost of $136 million or more to either State, local, or tribal governments, in the aggregate, or the private sector. Thus, this NPRM is not subject to the requirements of sections 202 of the UMRA.

Executive Order 13609 (Promoting International Regulatory Cooperation)

The policy statement in section 1 of E.O. 13609 provides, in part:

> The regulatory approaches taken by foreign governments may differ from those taken by U.S. regulatory agencies to address similar issues. In some cases, the differences between the regulatory approaches of U.S. agencies and those of their foreign counterparts might not be necessary and might impair the ability of American businesses to export and compete internationally. In meeting shared challenges involving health, safety, labor, security, environmental, and other issues, international regulatory cooperation can identify approaches that are at least as protective as those that are or would be adopted in the absence of such cooperation. International regulatory cooperation can also reduce, eliminate, or prevent unnecessary differences in regulatory requirements.

NHTSA requests public comment on the ''regulatory approaches taken by foreign governments'' concerning the subject matter of this rulemaking. In the discussion above on the NTTAA, we have noted that we have reviewed the procedures and regulations developed globally to test child restraints dynamically in the side impact environment, and found the Takata test procedure to be the most suitable for our purposes. Comments are requested on the above policy statement and the implications it has for this rulemaking.

Regulation Identifier Number

The Department of Transportation assigns a regulation identifier number (RIN) to each regulatory action listed in the Unified Agenda of Federal Regulations. The Regulatory Information Service Center publishes the Unified Agenda in April and October of each year. You may use the RIN contained in the heading at the beginning of this document to find this action in the Unified Agenda.

Plain Language

Executive Order 12866 requires each agency to write all rules in plain language. Application of the principles of plain language includes consideration of the following questions:

- Have we organized the material to suit the public's needs?
- Are the requirements in the rule clearly stated?
- Does the rule contain technical language or jargon that isn't clear?
- Would a different format (grouping and order of sections, use of headings, paragraphing) make the rule easier to understand?
- Would more (but shorter) sections be better?
- Could we improve clarity by adding tables, lists, or diagrams?
- What else could we do to make the rule easier to understand?

If you have any responses to these questions, please write to us with your views.

XIX. Public Participation

In developing this proposal, we tried to address the concerns of all our stakeholders. Your comments will help us improve this proposed rule. We welcome your views on all aspects of this proposed rule, but request comments on specific issues throughout this document. Your comments will be most effective if you follow the suggestions below:

—Explain your views and reasoning as clearly as possible.
—Provide solid technical and cost data to support your views.
—If you estimate potential costs, explain how you arrived at the estimate.
—Tell us which parts of the proposal you support, as well as those with which you disagree.
—Provide specific examples to illustrate your concerns.
—Offer specific alternatives.
—Refer your comments to specific sections of the proposal, such as the units or page numbers of the preamble, or the regulatory sections.
—Be sure to include the name, date, and docket number with your comments.

Your comments must be written and in English. To ensure that your comments are correctly filed in the docket, please include the docket number of this document in your comments.

Your comments must not be more than 15 pages long (49 CFR 553.21). We established this limit to encourage you to write your primary comments in a concise fashion. However, you may attach necessary additional documents to your comments. There is no limit on the length of the attachments.

Please submit your comments to the docket electronically by logging onto *http://www.regulations.gov* or by the means given in the **ADDRESSES** section at the beginning of this document.

Please note that pursuant to the Data Quality Act, in order for substantive data to be relied upon and used by the agency, it must meet the information quality standards set forth in the OMB and DOT Data Quality Act guidelines. Accordingly, we encourage you to consult the guidelines in preparing your comments. OMB's guidelines may be accessed at *http://www.whitehouse.gov/omb/fedreg/reproducible.html.*

How do I submit confidential business information?

If you wish to submit any information under a claim of confidentiality, you should submit three copies of your complete submission, including the information you claim to be confidential business information, to the Chief Counsel, NHTSA, at the address given above under **FOR FURTHER INFORMATION CONTACT.** In addition, you should submit a copy from which you have deleted the claimed confidential business information to the docket. When you send a comment containing information claimed to be confidential business information, you should include a cover letter setting forth the information specified in our confidential business information regulation. (49 CFR Part 512.)

Will the Agency consider late comments?

We will consider all comments that the docket receives before the close of business on the comment closing date indicated above under **DATES**. To the extent possible, we will also consider comments that the docket receives after that date. If the docket receives a comment too late for us to consider it in developing a final rule (assuming that one is issued), we will consider that comment as an informal suggestion for future rulemaking action.

How can I read the comments submitted by other people?

You may read the comments received by the docket at the address given above under **ADDRESSES**. You may also see the comments on the Internet (*http://regulations.gov*).

Please note that even after the comment closing date, we will continue to file relevant information in the docket as it becomes available. Further, some people may submit late comments. Accordingly, we recommend that you periodically check the docket for new material.

Anyone is able to search the electronic form of all comments received into any of our dockets by the name of the individual submitting the comment (or signing the comment, if submitted on behalf of an association, business, labor union, etc.). You may review DOT's complete Privacy Act Statement in the **Federal Register** published on April 11, 2000 (65 FR 19477–19478).

List of Subjects in 49 CFR Part 571

Imports, Motor vehicle safety, Motor vehicles, and Tires.

In consideration of the foregoing, NHTSA proposes to amend 49 CFR Part 571 as set forth below.

PART 571—FEDERAL MOTOR VEHICLE SAFETY STANDARDS

■ 1. The authority citation for Part 571 continues to read as follows:

Authority: 49 U.S.C. 322, 30111, 30115, 30117 and 30166; delegation of authority at 49 CFR 1.95.

■ 2. Section 571.5 is amended by adding paragraph (k)(5), and by revising paragraph (l)(3), to read as follows:

§ 571.5 Matter incorporated by reference.

* * * * *

(k) * * *

(5) Drawing Package, ''NHTSA Standard Seat Assembly; FMVSS No. 213—Side impact No. NHTSA–213–2011,'' dated June 2012, into § 571.213a.

* * * * *

(l) * * *

(3) SAE Recommended Practice J211, ''Instrumentation for Impact Tests,'' revised June 1980, into §§ 571.213; 571.213a; 571.218.

* * * * *

■ 3. Section 571.213 is amended by adding paragraph S5(g) to read as follows:

§ 571.213 Standard No. 213; Child restraint systems.

* * * * *

S5 * * *

* * * * *

(g) Each add-on child restraint system manufactured for use in motor vehicles, that is recommended for children in a weight range that includes weights up to 18 kilograms (40 pounds), shall meet the requirements in this standard and the additional side impact protection requirements in Standard No. 213a (§ 571.213a). Excepted from Standard No. 213a are harnesses and car beds.

* * * * *

■ 4. Section 571.213a is added to read as follows:

§ 571.213a Standard No. 213a; Child restraint systems—side impact protection.

S1. *Scope.* This standard specifies side impact protection requirements for child restraint systems recommended for children in a weight range that includes weights up to 18 kilograms (kg) ((40 pounds (lb)).

S2. *Purpose.* The purpose of this standard is to reduce the number of children killed or injured in motor vehicle side impacts.

S3. *Application.* This standard applies to add-on child restraint systems, except for harnesses and car beds, that are recommended for use by children in a weight range that includes weights up to 18 kg (40 lb), or by children in a height range that includes children whose height is not greater than 1100 millimeters.

S4. *Definitions.*

Add-on child restraint system means any portable child restraint system.

Belt-positioning seat means a child restraint system that positions a child on a vehicle seat to improve the fit of a vehicle Type II belt system on the child and that lacks any component, such as a belt system or a structural element, designed to restrain forward movement of the child's torso in a forward impact.

Car bed means a child restraint system designed to restrain or position a child in the supine or prone position on a continuous flat surface.

Child restraint anchorage system is defined in S3 of FMVSS No. 225 (§ 571.225).

Child restraint system is defined in S4 of FMVSS No. 213 (§ 571.213).

Contactable surface means any child restraint system surface (other than that of a belt, belt buckle, or belt adjustment hardware) that may contact any part of the head or torso of the appropriate test dummy, specified in S7, when a child restraint system is tested in accordance with S6.1.

Harness means a combination pelvic and upper torso child restraint system that consists primarily of flexible material, such as straps, webbing or similar material, and that does not

include a rigid seating structure for the child.

Rear-facing child restraint system means a child restraint system that positions a child to face in the direction opposite to the normal (forward) direction of travel of the motor vehicle.

Seat orientation reference line or *SORL* means the horizontal line through Point Z as illustrated in Figure 1.

Tether anchorage is defined in S3 of FMVSS No. 225 (§ 571.225).

Tether strap is defined in S3 of FMVSS No. 225 (§ 571.225).

Torso means the portion of the body of a seated anthropomorphic test dummy, excluding the thighs, that lies between the top of the child restraint system seating surface and the top of the shoulders of the test dummy.

S5. *Requirements.*

(a) Each child restraint system subject to this section shall meet the requirements in this section when, as specified, tested in accordance with S6 and this paragraph. Each child restraint system shall meet the requirements at each of the restraint's seat back angle adjustment positions and restraint belt routing positions, when the restraint is oriented in the forward or rearward direction recommended by the manufacturer pursuant to S5.6 of FMVSS No. 213 (§ 571.213), and tested with the test dummy specified in S7 of this section.

(b) Each child restraint system subject to this section shall also meet all applicable requirements in FMVSS No. 213 (§ 571.213).

S5.1 *Dynamic performance.*

S5.1.1 *Child restraint system integrity.* When tested in accordance with S6.1, each child restraint system shall meet the requirements of paragraphs (a) through (c) of this section.

(a) Exhibit no complete separation of any load bearing structural element and no partial separation exposing either surfaces with a radius of less than 6 mm (¼ inch) or surfaces with protrusions greater than 9 mm (⅜ inch) above the immediate adjacent surrounding contactable surface of any structural element of the child restraint system.

(b)(1) If adjustable to different positions, remain in the same adjustment position during the testing that it was in immediately before the testing, except as otherwise specified in paragraph (b)(2).

(2)(i) Subject to paragraph (b)(2)(ii), a rear-facing child restraint system may have a means for repositioning the seating surface of the system that allows the system's occupant to move from a reclined position to an upright position and back to a reclined position during testing.

(ii) No opening that is exposed and is larger than 6 mm (¼ inch) before the testing shall become smaller during the testing as a result of the movement of the seating surface relative to the child restraint system as a whole.

(c) If a front facing child restraint system, not allow the angle between the system's back support surfaces for the child and the system's seating surface to be less than 45 degrees at the completion of the test.

S5.1.2 *Injury criteria.*

When tested in accordance with S6.1 and with the test dummy specified in S7, each child restraint system that, in accordance with S5.5.2 of Standard No. 213 (§ 571.213), is recommended for use by children whose mass is more than 10 kg shall—

(a) Limit the resultant acceleration at the location of the accelerometer mounted in the test dummy head such that, for any two points in time, t1 and t2, during the event which are separated by not more than a 15 millisecond time interval and where t1 is less than t2, the maximum calculated head injury criterion (HIC) shall not exceed 570, determined using the resultant head acceleration at the center of gravity of the dummy head as expressed as a multiple of g (the acceleration of gravity), calculated using the expression:

$$HIC = \left[\frac{1}{(t_2 - t_1)} \int_{t_1}^{t_2} a\,dt \right]^{2.5} (t_2 - t_1)$$

(b) The maximum chest compression (or deflection) from the output of the thoracic InfraRed Telescoping Rod for Assessment of Chest Compression (IR–TRACC) shall not exceed 23 millimeters.

S5.1.3 *Occupant containment.* When tested in accordance with S6.1 and the requirements specified in this section, each child restraint system recommended for use by children in a specified mass range that includes any children having a mass greater than 5 kg (11 lb) but not greater than 10 kg (22 lb), shall retain the test dummy's head such that there is no direct contact of the head to any part of the side impact seat assembly described in S6.1.1(a).

S5.1.4 *Protrusion limitation.* Any portion of a rigid structural component within or underlying a contactable surface shall, with any padding or other flexible overlay material removed, have a height above any immediately adjacent restraint system surface of not more than 9 mm (⅜ inch) and no exposed edge with a radius of less than 6 mm (¼ inch).

S5.1.5 *Belt buckle release.* Any buckle in a child restraint system belt assembly designed to restrain a child using the system shall:

(a) When tested in accordance with the appropriate sections of S6.2, after the dynamic test of S6.1, release when a force of not more than 71 N is applied.

(b) Not release during the testing specified in S6.1.

S6. *Test conditions and procedures.*

S6.1 *Dynamic side impact test for child restraint systems.*

The test conditions and test procedure for the dynamic side impact test are specified in S6.1.1 and S6.1.2, respectively.

S6.1.1 *Test conditions.*

(a) *Test device.*

(1) The test device is a side impact seat assembly (SISA) consisting of a simulated vehicle bench seat, with one seating position, and a simulated door assembly as described in Drawing Package, ''NHTSA Standard Seat Assembly; FMVSS No. 213—Side impact No. NHTSA–213–2011,'' dated June 2012 (incorporated by reference, see § 571.5). The simulated door assembly is rigidly attached to the floor of the SISA and the simulated vehicle bench seat is mounted on rails to allow it to move relative to the floor of the SISA in the direction perpendicular to the SORL. The SISA is mounted on a dynamic test platform so that the SORL of the seat is 10 degrees from the perpendicular direction of the test platform travel. The SISA is rotated counterclockwise if the impact side is on the left of the seating position and clockwise if the impact side is on the right of the seating position.

(2) As illustrated in the SISA drawing package, attached to the SISA is a child restraint anchorage system conforming to the specifications of Standard No. 225 (§ 571.225).

(b) Accelerate the test platform to achieve a relative velocity (V_0) of 31.3 ± 0.8 km/h in the direction perpendicular to the SORL between the SISA bench seat and the door assembly at the time they come in contact (time = T_0). The front face of the armrest on the door is 32 ± 2 mm from the edge of the seat towards the SORL at time = T_0. The test platform velocity in the direction perpendicular to the SORL is not greater than V_0 and not less than V_0 – 1 km/h during the time of interaction of the door with the child restraint system.

(c) The change in velocity of the bench seat is 31.3 ± 1.0 km/h and the bench seat acceleration perpendicular to

the SORL is within the corridor shown in Figure 3.

(d) Performance tests under S6.1 are conducted at any ambient temperature from 20.6 °C to 22.2 °C and at any relative humidity from 10 percent to 70 percent.

(e) The child restraint shall meet the requirements of S5 at each of its seat back angle adjustment positions and restraint belt routing positions, when the restraint is oriented in the direction recommended by the manufacturer (e.g., forward or rearward) pursuant to S5.5 of Standard No. 213 (§ 571.213), and tested with the test dummy specified in S7 of this section.

S6.1.2 *Dynamic test procedure.*

(a) The child restraint centerline is positioned 300 mm from the SISA bench seat edge (impact side) and attached in any of the following manners.

(1) Install the child restraint system using the child restraint anchorage system in accordance with the manufacturer's instructions provided with the child restraint system pursuant to S5.6 of Standard No. 213 (§ 571.213), except as provided in this paragraph. For forward-facing restraints, attach the tether strap, if provided, to the tether anchorage on the SISA. No other supplemental device to attach the child restraint is used. Tighten belt systems used to attach the restraint to the SISA bench seat to a tension of not less than 53.5 N and not more than 67 N.

(2) For rear-facing restraints, install the child restraint system using only the lower anchorages of the child restraint anchorage system in accordance with the manufacturer's instructions provided with the child restraint system pursuant to S5.6 of Standard No. 213 (§ 571.213). No tether strap (or any other supplemental device) is used. Tighten belt systems used to attach the restraint to the SISA bench seat to a tension of not less than 53.5 N and not more than 67 N.

(3) For belt-positioning seats, use the lap and shoulder belt and no tether or any other supplemental device.

(b) Select any dummy specified in S7 for testing child restraint systems for use by children of the heights and weights for which the system is recommended in accordance with S5.5 of Standard No. 213 (§ 571.213). The dummy is assembled, clothed and prepared as specified in S8 and Part 572 of this chapter, as appropriate.

(c) The dummy is placed and positioned in the child restraint system as specified in S9. Attach the child restraint belts used to restrain the child within the system, if appropriate, as specified in S9.

(d) *Belt adjustment.* Shoulder and pelvic belts that directly restrain the dummy are adjusted as follows: Tighten the belt system used to restrain the child within the child restraint system to a tension of not less than 9 N on the webbing at the top of each dummy shoulder and the pelvic region. Tighten the belt systems used to attach the restraint to the SISA bench seat to a tension of not less than 53.5 N and not more than 67 N. For belt-positioning seats, the lap portion of the lap and shoulder belt is tightened to a tension of not less than 53.5 N and not more than 67 N. The shoulder portion is tightened to a tension of not less than 9 N and not more than 18 N.

(e) Accelerate the test platform in accordance with S6.1.1(b).

(f) All instrumentation and data reduction is in conformance with SAE J211 JUN80 (incorporated by reference, see § 571.5).

S6.2 *Buckle release test procedure.*

(a) After completion of the testing specified in S6.1 and before the buckle is unlatched, tie a self-adjusting sling to each wrist and ankle of the test dummy in the manner illustrated in Figure 4 of Standard No. 213 (§ 571.213), without disturbing the belted dummy and the child restraint system.

(b) Pull the sling that is tied to the dummy restrained in the child restraint system and apply the following force: 90 N for a system tested with a 12-month-old dummy; 200 N for a system tested with a 3-year-old dummy. For an add-on child restraint, the force is applied in the manner illustrated in Figure 4 of Standard No. 213 (§ 571.213) and by pulling the sling horizontally and parallel to the SORL of the SISA.

(c) While applying the force specified in S6.2 (b), and using the device shown in Figure 8 of Standard No. 213 (§ 571.213) for pushbutton-release buckles, apply the release force in the manner and location specified in S6.2.1, for that type of buckle. Measure the force required to release the buckle.

S7 *Test dummies.* (Subparts referenced in this section are of part 572 of this chapter.)

S7.1 *Dummy selection.* At NHTSA's option, any dummy specified in S7.1(a) or S7.1(b) may be selected for testing child restraint systems for use by children of the height and mass for which the system is recommended in accordance with S5.5 of Standard No. 213 (§ 571.213). A child restraint that meets the criteria in two or more of the following paragraphs may be tested with any of the test dummies specified in those paragraphs.

(a) A child restraint that is recommended by its manufacturer in accordance with S5.5 of Standard No. 213 (§ 571.213) for use either by children in a specified mass range that includes any children having a mass greater than 5 kg (11 lb) but not greater than 10 kg (22 lb), or by children in a specified height range that includes any children whose height is greater than 650 mm but not greater than 850 mm, is tested with a 12-month-old test dummy (CRABI) conforming to part 572 subpart R.

(b) A child restraint that is recommended by its manufacturer in accordance with S5.5 of Standard No. 213 (§ 571.213) for use either by children in a specified mass range that includes any children having a mass greater than 10 kg (22 lb) but not greater than 18 kg (40 lb), or by children in a specified height range that includes any children whose height is greater than 850 mm but not greater than 1100 mm, is tested with a 3-year-old test dummy (Q3s) conforming to part 572 subpart W.

S8 *Dummy clothing and preparation.*

S8.1 *Type of clothing.*

(a) *12-month-old dummy (CRABI) (49 CFR Part 572, Subpart R).* When used in testing under this standard, the dummy specified in 49 CFR part 572, subpart R, is clothed in a cotton-polyester based tight fitting sweat shirt with long sleeves and ankle long pants whose combined weight is not more than 0.25 kg.

(b) *3-year-old side impact dummy (Q3s) (49 CFR Part 572, Subpart W).* When used in testing under this standard, the dummy specified in 49 CFR part 572, subpart W, is clothed as specified in that subpart, except without shoes.

S8.2 *Preparing dummies.* Before being used in testing under this standard, test dummies must be conditioned at any ambient temperature from 20.6° to 22.2 °C and at any relative humidity from 10 percent to 70 percent, for at least 4 hours.

S9 *Positioning the dummy and attaching the belts used to restrain the child within the child restraint system and/or to attach the system to the SISA bench seat.*

S9.1 *12-month-old dummy (CRABI) (49 CFR Part 572, Subpart R).* Position the test dummy according to the instructions for child positioning that the manufacturer provided with the child restraint system under S5.6.1 or S5.6.2 of Standard No. 213 (§ 571.213), while conforming to the following:

(a) When testing rear-facing child restraint systems, place the 12-month-old dummy in the child restraint system so that the back of the dummy torso contacts the back support surface of the system. Attach all appropriate child

restraint belts used to restrain the child within the child restraint system and tighten them as specified in S6.1.2(d). Attach all appropriate belts used to attach the child restraint system to the SISA bench seat and tighten them as specified in S6.1.2.

(b) When testing forward-facing child restraint systems, extend the dummy's arms vertically upwards and then rotate each arm downward toward the dummy's lower body until the arm contacts a surface of the child restraint system or the SISA. Ensure that no arm is restrained from movement in other than the downward direction, by any part of the system or the belts used to anchor the system to the SISA bench seat.

(c) When testing forward-facing child restraint systems, extend the arms of the 12-month-old test dummy as far as possible in the upward vertical direction. Extend the legs of the test dummy as far as possible in the forward horizontal direction, with the dummy feet perpendicular to the centerline of the lower legs. Using a flat square surface with an area of 2,580 square mm, apply a force of 178 N, perpendicular to the plane of the back of the standard seat assembly, first against the dummy crotch and then at the dummy thorax in the midsagittal plane of the dummy. Attach all appropriate child restraint belts used to restrain the child within the child restraint system and tighten them as specified in S6.1.2(d). Attach all appropriate belts used to attach the child restraint system to the SISA bench seat and tighten them as specified in S6.1.2.

(d) After the steps specified in paragraph (c), rotate each dummy limb downwards in the plane parallel to the dummy's midsagittal plane until the limb contacts a surface of the child restraint system or the standard seat assembly. Position the limbs, if necessary, so that limb placement does not inhibit torso or head movement in tests conducted under S6.

S9.2 *3-year-old side impact dummy (Q3s) (49 CFR Part 572, Subpart W) in forward-facing child restraints.* Position the test dummy according to the instructions for child positioning that the restraint manufacturer provided with the child restraint system in accordance with S5.6.1 or S5.6.2 of Standard No. 213 (§ 571.213), while conforming to the following:

(a) Holding the test dummy torso upright until it contacts the child restraint system's design seating surface, place the test dummy in the seated position within the child restraint system with the midsagittal plane of the test dummy head coincident with the center of the child restraint system.

(b) Extend the arms of the test dummy as far as possible in the upward vertical direction. Extend the legs of the dummy as far as possible in the forward horizontal direction, with the dummy feet perpendicular to the center line of the lower legs.

(c) Using a flat square surface with an area of 2580 square millimeters, apply a force of 178 N, perpendicular to the plane of the back of the SISA first against the dummy crotch and then at the dummy thorax in the midsagittal plane of the dummy. For a child restraint system with a fixed or movable surface, position each movable surface in accordance with the instructions that the manufacturer provided under S5.6.1 or S5.6.2 of Standard No. 213 (§ 571.213). For forward-facing restraints, attach all appropriate child restraint belts used to restrain the child within the child restraint system and tighten them as specified in S6.1.2(d). Attach all appropriate belts used to attach the child restraint system to the SISA or to restrain the child and tighten them as specified in S6.1.2. For belt-positioning seats, attach all appropriate vehicle belts used to restrain the child within the child restraint system and tighten them as specified in S6.1.2(d).

(c) After the steps specified in paragraph (b) of this section, rotate each of the dummy's legs downwards in the plane parallel to the dummy's midsagittal plane until the limb contacts a surface of the child restraint or the SISA. Rotate each of the dummy's arms downwards in the plane parallel to the dummy's midsagittal plane until the arm is positioned at a 25 degree angle with respect to the thorax.

S9.3 *3-year-old side impact dummy (Q3s) (49 CFR Part 572, Subpart W) in rear-facing child restraints.* Position the test dummy according to the instructions for child positioning that the restraint manufacturer provided with the child restraint system in accordance with S5.6.1 or S5.6.2 of Standard No. 213 (§ 571.213), while conforming to the following:

(a) Extend the arms of the test dummy as far as possible in the upward vertical direction. Extend the legs of the dummy as far as possible in the forward horizontal direction, with the dummy feet perpendicular to the center line of the lower legs.

(b) Place the Q3s dummy in the child restraint system so that the back of the dummy torso contacts the back support surface of the system. Place the test dummy in the child restraint system with the midsagittal plane of the test dummy head coincident with the center of the child restraint system. Rotate each of the dummy's legs downwards in the plane parallel to the dummy's midsagittal plane until the leg or feet of the dummy contacts the seat back of the SISA or a surface of the child restraint system.

(c) Using a flat square surface with an area of 2580 square millimeters, apply a force of 178 N, perpendicular to the plane of the back of the SISA bench seat first against the dummy crotch and then at the dummy thorax in the midsagittal plane of the dummy. For a child restraint system with a fixed or movable surface, position each movable surface in accordance with the instructions that the manufacturer provided under S5.6.1 or S5.6.2 of Standard No. 213 (§ 571.213). Attach all appropriate child restraint belts for use to restrain a child within the child restraint system and tighten them as specified in S6.1.2(d). Attach all appropriate belts used to attach the child restraint system to the SISA and tighten them as specified in S6.1.2.

(d) After the steps specified in paragraph (c) of this section, rotate each dummy arm downwards in the plane parallel to the dummy's midsagittal plane until the limb is positioned at a 25 degree angle with respect to the thorax.

FIGURES TO § 571.213a

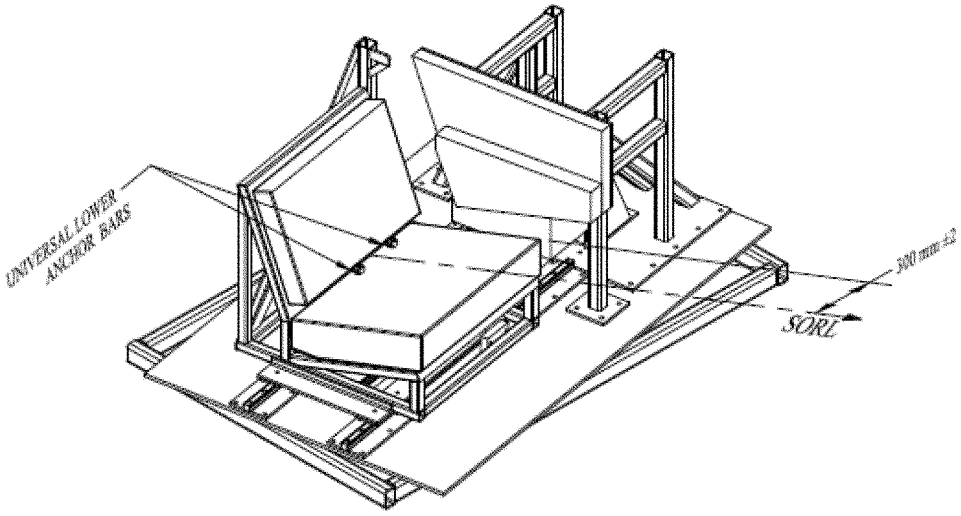

SIDE IMPACT SEAT ASSEMBLY
FIGURE 1

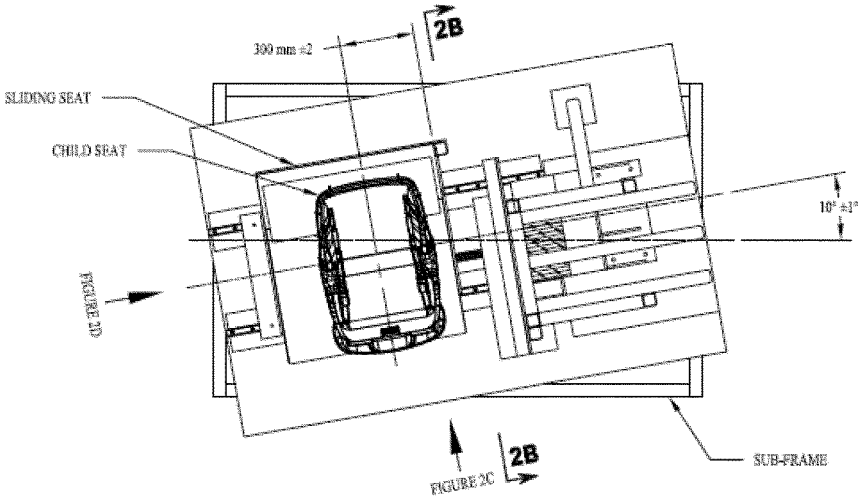

SIDE IMPACT SEAT ASSEMBLY
PLAN VIEW
FIGURE 2A

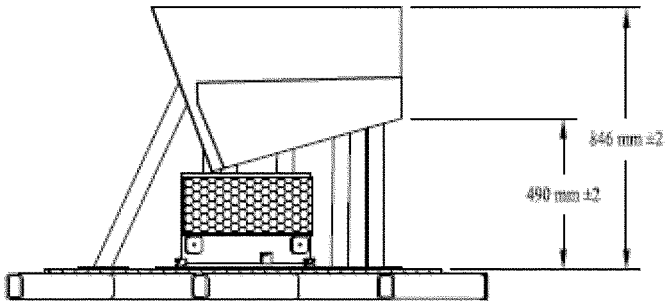

SIDE IMPACT SSEAT ASSEMBLY
DOOR PANEL VIEW
FIGURE 2B

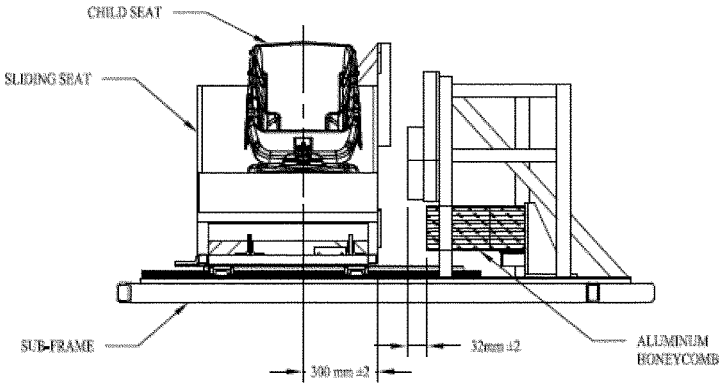

SIDE IMPACT SEAT ASSEMBLY
FRONTAL VIEW
FIGURE 2C

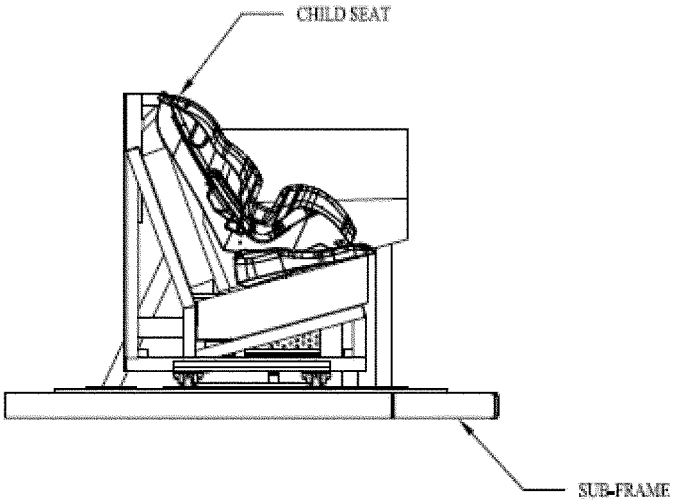

SIDE IMPACT SEAT ASSEMBLY
SIDE VIEW
FIGURE 2D

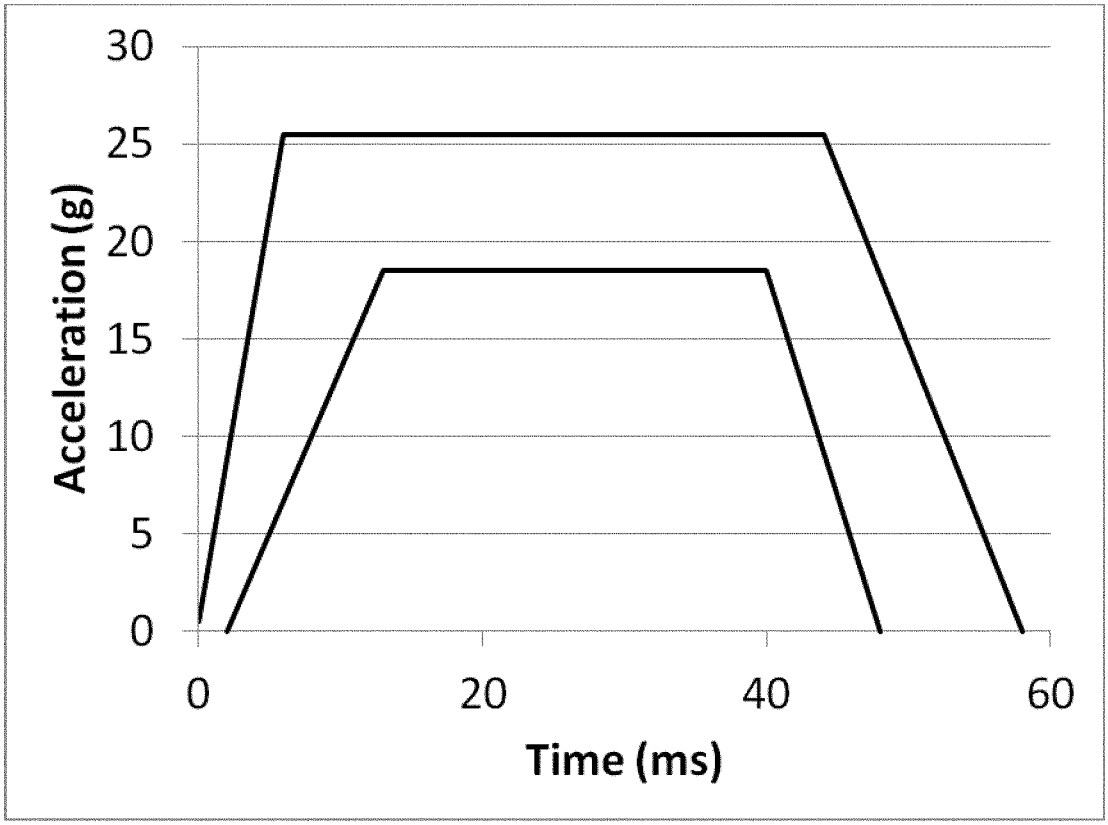

Figure 3. SISA Bench Seat Acceleration Boundaries

Issued on: January 22, 2014.

Christopher J. Bonanti,

Associate Administrator for Rulemaking.

[FR Doc. 2014–01568 Filed 1–23–14; 4:15 pm]

BILLING CODE 4910–59–P

FEDERAL REGISTER

Vol. 79 Tuesday,

No. 18 January 28, 2014

Part IV

The President

Presidential Determination No. 2014–07 of January 17, 2014—Proposed Third Amendment to the Agreement for Co-operation Between the United States of America and the International Atomic Energy Agency

Federal Register
Vol. 79, No. 18
Tuesday, January 28, 2014

Presidential Documents

Title 3—

The President

Presidential Determination No. 2014–07 of January 17, 2014

Proposed Third Amendment to the Agreement for Co-operation Between the United States of America and the International Atomic Energy Agency

Memorandum for the Secretary of State [and] the Secretary of Energy

I have considered the proposed Third Amendment to the Agreement for Co-operation Between the United States of America and the International Atomic Energy Agency, signed at Vienna on May 11, 1959, as amended and extended February 12, 1974, and January 14, 1980, along with the views, recommendations, and statements of the interested agencies.

I have determined that the performance of the Third Amendment will promote, and will not constitute an unreasonable risk to, the common defense and security. Pursuant to section 123 b. of the Atomic Energy Act of 1954, as amended (42 U.S.C. 2153(b)), I hereby approve the proposed Third Amendment and authorize the Secretary of State to arrange for its execution.

The Secretary of State is authorized to publish this determination in the **Federal Register**.

THE WHITE HOUSE,
Washington, January 17, 2014

[FR Doc. 2014–01818
Filed 1–27–14; 11:15 am]
Billing code 4710–10

Reader Aids

Federal Register

Vol. 79, No. 18

Tuesday, January 28, 2014

CUSTOMER SERVICE AND INFORMATION

Federal Register/Code of Federal Regulations	
General Information, indexes and other finding aids	**202–741–6000**
Laws	**741–6000**
Presidential Documents	
Executive orders and proclamations	**741–6000**
The United States Government Manual	**741–6000**
Other Services	
Electronic and on-line services (voice)	**741–6020**
Privacy Act Compilation	**741–6064**
Public Laws Update Service (numbers, dates, etc.)	**741–6043**
TTY for the deaf-and-hard-of-hearing	**741–6086**

ELECTRONIC RESEARCH

World Wide Web

Full text of the daily Federal Register, CFR and other publications is located at: **www.fdsys.gov.**

Federal Register information and research tools, including Public Inspection List, indexes, and Code of Federal Regulations are located at: **www.ofr.gov.**

E-mail

FEDREGTOC-L (Federal Register Table of Contents LISTSERV) is an open e-mail service that provides subscribers with a digital form of the Federal Register Table of Contents. The digital form of the Federal Register Table of Contents includes HTML and PDF links to the full text of each document.

To join or leave, go to **http://listserv.access.gpo.gov** and select *Online mailing list archives, FEDREGTOC-L, Join or leave the list (or change settings);* then follow the instructions.

PENS (Public Law Electronic Notification Service) is an e-mail service that notifies subscribers of recently enacted laws.

To subscribe, go to **http://listserv.gsa.gov/archives/publaws-l.html** and select *Join or leave the list (or change settings);* then follow the instructions.

FEDREGTOC-L and **PENS** are mailing lists only. We cannot respond to specific inquiries.

Reference questions. Send questions and comments about the Federal Register system to: **fedreg.info@nara.gov**

The Federal Register staff cannot interpret specific documents or regulations.

Reminders. Effective January 1, 2009, the Reminders, including Rules Going Into Effect and Comments Due Next Week, no longer appear in the Reader Aids section of the Federal Register. This information can be found online at **http://www.regulations.gov.**

CFR Checklist. Effective January 1, 2009, the CFR Checklist no longer appears in the Federal Register. This information can be found online at **http://bookstore.gpo.gov/.**

FEDERAL REGISTER PAGES AND DATE, JANUARY

1–324 2
325–528 3
529–748 6
749–1302 7
1303–1590 8
1591–1732 9
1733–2074 10
2075–2358 13
2359–2580 14
2581–2760 15
2761–3070 16
3071–3300 17
3301–3480 21
3481–3722 22
3723–4072 23
4073–4264 24
4265–4388 27
4389–4612 28

CFR PARTS AFFECTED DURING JANUARY

At the end of each month the Office of the Federal Register publishes separately a List of CFR Sections Affected (LSA), which lists parts and sections affected by documents published since the revision date of each title.

3 CFR

Proclamations:
9073 749
9074 751
9075 753
9076 3477
9077 3479
9078 ..... 3719, 4265

Executive Orders:
13656 4263

Administrative Orders:
Memorandums:
Memorandum of December 27, 2013 527
Memorandum of January 9, 2014 2577
Memorandum of January 22, 2014 4385
Notices:
Notice of January 21, 2014 3721
Presidential Determinations:
No. 2014–07 of January 17, 2014 4611

5 CFR

550 529
870 530
890 531
894 531
2641 1

Proposed Rules:
179 609
315 610
870 613

6 CFR

5 2

7 CFR

205 3301
210 ..... 325, 2761
271 5
272 5
274 5
276 5
277 5
400 2075
407 2075
457 2075
915 2773
930 2775
1222 3696

Proposed Rules:
319 4410
1211 2805
1216 3139

9 CFR

11 3071

Proposed Rules:
56 4538
94 3741
145 4538
146 4538
147 4538

10 CFR

218 16
429 500
430 500
431 16
490 16
601 16
820 16
824 16
851 16
1013 16
1017 16
1050 16

Proposed Rules:
Ch. I 3543
30 3328
40 3328
50 3328
52 3328
60 3328
61 ..... 3328, 4102
63 3328
70 3328
71 3328
72 3328
430 3742
431 2383

11 CFR

111 3302

12 CFR

234 3666
237 340
615 3543
652 3071
1230 4389
1231 4394
1770 4389

Proposed Rules:
Ch. II 3329
30 4282
170 4282
201 615
914 4414
917 4414
1006 2384
1236 4414
1239 4414
1710 4414
1720 4414

13 CFR

Ch. I 1303, 1309
115 2084

14 CFR

25 .....1591, 2359, 2365
39 .....344, 532, 536, 540, 543, 545, 549, 1315, 1733, 2366, 3303, 3481, 4267, 4269
61 20
71 .....346, 3305, 3315, 4073
73 3326
91 2088
95 2368
97 .....3072, 3073
121 2088
125 2088
141 20

Proposed Rules:

25 .....1334, 1336, 1337, 1339, 2384, 2387, 2388
39 .....65, 70, 72, 74, 76, 763, 1772, 1774, 2391, 2593, 2595, 2805, 3139, 3336, 3339, 3341, 4300
71 .....1341, 1342, 1344, 1345, 1346, 1607, 3544, 3545

15 CFR

740 .....22, 264
742 22
744 22
770 22
772 22
774 .....22, 264

16 CFR

1112 2581
1222 2581

17 CFR

42 2370
200 1734
239 1316
240 .....1522, 2777
249 .....1522, 2777
270 1316
274 1316
300 2779

Proposed Rules:

Ch. I 1347, 4104
150 .....2394, 3547
230 3926
232 3926
239 3926
240 3926
260 3926

18 CFR

11 3075
35 .....755, 4075
40 3723
292 3483

Proposed Rules:

40 3547

19 CFR

12 .....2088, 2781

Proposed Rules:

7 2395
163 2395
168 2395
178 2395

21 CFR

14 2093
225 3738
510 .....2785, 2786
529 .....2785, 2786
814 1735
866 3739
876 3088
892 3088

Proposed Rules:

25 3742
870 765
1308 .....1776, 4429

22 CFR

120 26
121 .....26, 34
123 .....26, 34
124 .....26, 34
125 34
126 26

23 CFR

771 2107

26 CFR

1 .....755, 2094, 2589, 3094
31 4077
57 3483
602 3483

Proposed Rules:

1 .....3042, 3142, 3145, 4105, 4302

27 CFR

Proposed Rules:

9 2399
478 774

28 CFR

Proposed Rules:

527 78

29 CFR

101 3483
102 3483
2700 3104
4007 347
4022 2591

Proposed Rules:

1904 778

32 CFR

161 708

Proposed Rules:

767 620

33 CFR

110 2371
117 .....1741, 2098, 3495, 3496
165 .....2371, 3105, 3497, 3499, 3502, 4077, 4401

Proposed Rules:

140 .....1780, 2254
145 2254
146 1780
148 2254
149 2254
165 .....1789, 2597, 3552, 3555
401 4433

34 CFR

685 3108

36 CFR

Proposed Rules:

13 2608
242 1791

37 CFR

Proposed Rules:

1 .....3146, 4105
2 3750
3 3146
5 3146
6 3750
7 3750
11 3146

38 CFR

3 2099
4 2099
17 .....1330, 1332
36 2100
60 2099

Proposed Rules:

3 430
13 430

39 CFR

20 3327
121 4079
775 2102

Proposed Rules:

111 375
121 376

40 CFR

9 350
30 4403
31 4403
52 .....47, 51, 54, 57, 364, 551, 573, 577, 580, 1593, 1596, 2375, 2787, 3120, 3504, 3506, 4082, 4274, 4407
63 367
70 .....2787, 4274
98 3507
180 .....582, 1599, 3508, 3512
228 372
260 350
261 350
300 61

Proposed Rules:

49 2546
52 .....378, 631, 784, 1349, 1350, 1608, 1612, 1795, 2144, 2404, 2808, 3147, 3757, 4121, 4308, 4313, 4436
60 .....1352, 1430
63 .....379, 1676, 3557, 4439
70 .....1430, 4313
71 1430
81 .....3757, 4121
98 .....1430, 2614
745 1799

42 CFR

85a 2789
412 .....61, 1741
413 .....63, 1741, 1742
414 1741
419 1741
424 .....63, 1741, 1742
430 2948
431 2948
435 2948
436 2948
440 2948
441 2948
447 2948
482 .....61, 1741
485 .....61, 1741
489 .....61, 1741

Proposed Rules:

85a 2809
100 1804
409 1918
417 1918
422 1918
423 1918
424 1918

44 CFR

64 4085
67 .....2103, 3518, 4089, 4091, 4094, 4097, 4100

Proposed Rules:

67 381

45 CFR

Proposed Rules:

160 298
162 298
164 784

46 CFR

30 2106
150 2106
153 2106

Proposed Rules:

4 1780
25 2254
27 2254
28 2254
30 2254
31 2254
32 2254
34 2254
50 2254
56 2254
70 2254
71 2254
72 2254
76 2254
78 2254
90 2254
91 2254
92 2254
95 2254
107 2254
108 2254
109 1780
113 2254
114 2254
116 2254
118 2254
122 2254
125 2254
132 2254
147 2254
159 2254
160 2254
161 2254
162 2254
164 2254
167 2254
169 2254
175 2254
176 2254
177 2254
181 2254
182 2254
185 2254
188 2254
189 2254
190 2254
193 2254

47 CFR

0 3123
1 .....588, 3133
2 588

4 3123
12 3123
27 ....588, 3133
73 ....3135, 3558
90 588
95 2793
Proposed Rules:
22 2615
24 2615
27 2615
73 2405
76 4138
87 2615
90 2615

48 CFR

225 3519
252 3519

49 CFR

213 4234
214 1743
385 3520
386 3520
391 2377
622 2107
1554 2119
Proposed Rules:
543 3153
571 ....631, 4570

50 CFR

17 ....1552, 2380
622 3136
648 3137
665 ....2382, 4276
679 ....601, 603, 758, 2794, 4279, 4280
Proposed Rules:
17 ....796, 800, 1615, 1805, 3559
100 1791
224 4313
300 ....1354, 1810
622 81
648 ....1813, 4319
665 1354
679 381

LIST OF PUBLIC LAWS

Note: No public bills which have become law were received by the Office of the Federal Register for inclusion in today's **List of Public Laws**.

Last List January 24, 2014

Public Laws Electronic Notification Service (PENS)

PENS is a free electronic mail notification service of newly enacted public laws. To subscribe, go to *http://listserv.gsa.gov/archives/publaws-l.html*

Note: This service is strictly for E-mail notification of new laws. The text of laws is not available through this service. **PENS** cannot respond to specific inquiries sent to this address.