AUTHENTICATED
U.S. GOVERNMENT
INFORMATION
GPO

FEDERAL REGISTER

Vol. 80 Monday,
No. 133 July 13, 2015

Book 3 of 3 Books

Pages 40767–40894

Part III

Department of the Interior

Bureau of Land Management

43 CFR Parts 3160 and 3170
Onshore Oil and Gas Operations; Federal and Indian Oil and Gas Leases; Site Security; Proposed Rule

DEPARTMENT OF THE INTERIOR

Bureau of Land Management

43 CFR Parts 3160 and 3170

[15X.LLWO300000.L13100000.NB0000]

RIN 1004–AE15

Onshore Oil and Gas Operations; Federal and Indian Oil and Gas Leases; Site Security

AGENCY: Bureau of Land Management, Interior.

ACTION: Proposed rule.

SUMMARY: This proposed rule would replace Onshore Oil and Gas Order No. 3, Site Security (Order 3), with new regulations that would be codified in the Code of Federal Regulations (CFR). Order 3 establishes minimum standards for oil and gas facility site security. It includes provisions intended to ensure that oil and gas produced from Federal and Indian (except Osage Tribe) oil and gas leases are properly and securely handled, so as to ensure accurate measurement, production accountability, and royalty payments, and to prevent theft and loss. Order 3 was issued in 1989.

The changes proposed as part of this proposed rule would allow the BLM to strengthen its policies governing production verification and accountability by updating Order 3's requirements to address changes in technology and industry practices that have occurred in the 25 years since Order 3 was issued, and to respond to recommendations made by the Government Accountability Office (GAO) with respect to the BLM's production verification efforts. The proposed rule addresses Facility Measurement Points (FMPs), site facility diagrams, the use of seals, bypasses around meters, documentation, recordkeeping, commingling, off-lease measurement, and the reporting of incidents of unauthorized removal or mishandling of oil and condensate. The proposed rule also identifies certain acts of noncompliance that would result in an immediate assessment. Finally, it sets forth a process for the BLM to consider variances from the requirements of this proposed regulation.

The BLM believes these proposed changes will enhance its overall production verification and accountability efforts. As part of those efforts, the BLM also anticipates that it will separately propose new regulations to update and replace Onshore Oil and Gas Orders Nos. 4 (Order 4) and 5 (Order 5) related to measurement of oil and gas, respectively.

DATES: Send your comments on this proposed rule to the BLM on or before September 11, 2015. The BLM is not obligated to consider any comments received after the above date in making its decision on the final rule.

As explained later, the changes that follow would establish proposed new information collection requirements that must be approved by OMB. If you wish to comment on the information collection requirements in this proposed rule, please note that the OMB is required to make a decision concerning the collection of information contained in this proposed rule between 30 and 60 days after publication of this proposed rule in the **Federal Register**. Therefore, a comment to OMB on the proposed information collection requirements is best assured of being considered if OMB receives it by August 12, 2015.

ADDRESSES: *Mail:* U.S. Department of the Interior, Director (630), Bureau of Land Management, Mail Stop 2134 LM, 1849 C St., NW., Washington, DC 20240, Attention: 1004–AE15. *Personal or messenger delivery:* 20 M Street SE., Room 2134LM, Washington, DC 20003. *Federal eRulemaking Portal: http://www.regulations.gov.* Follow the instructions at this Web site.

Comments on the information collection burdens: *Fax:* Office of Management and Budget (OMB), Office of Information and Regulatory Affairs, Desk Officer for the Department of the Interior, fax (202) 395–5806. *Electronic mail: oira_docket@omb.eop.gov.* Please indicate ''Attention: OMB Control Number 1004–XXXX,'' regardless of the method used to submit comments on the information collection burdens. If you submit comments on the information collection burdens, you should also provide the BLM with a copy of those comments, at one of the addresses shown above, so that we can summarize all written comments and address them in the final rule.

FOR FURTHER INFORMATION CONTACT: Michael Wade, BLM Colorado State Office, at 303–239–3737. For questions relating to regulatory process issues, please contact Faith Bremner, BLM Washington Office, at 202–912–7441. Persons who use a telecommunications device for the deaf (TDD) may call the Federal Information Relay Service (FIRS) at 1–800–877–8339 to contact the above individuals during normal business hours. FIRS is available 24 hours a day, 7 days a week to leave a message or question with the above individual. You will receive a reply during normal business hours.

SUPPLEMENTARY INFORMATION:

I. Public Comment Procedures
II. Background
III. Discussion of the Proposed Rule
IV. Procedural Matters

I. Public Comment Procedures

If you wish to comment on the proposed rule, you may submit your comments by any one of several methods specified (see **ADDRESSES** above). If you wish to comment on the information collection requirements, you should send those comments directly to the OMB as outlined (see **ADDRESSES**); however, we ask that you also provide a copy of those comments to the BLM.

Please make your comments as specific as possible by confining them to issues for which comments are sought in this notice, and explain the basis for your comments. The comments and recommendations that will be most useful and likely to influence agency decisions are:

1. Those supported by quantitative information or studies; and

2. Those that include citations to, and analyses of, the applicable laws and regulations.

The BLM is not obligated to consider or include in the Administrative Record for the rule comments received after the close of the comment period (see **DATES**) or comments delivered to an address other than those listed above (see **ADDRESSES**).

Comments, including names and street addresses of respondents, will be available for public review at the address listed under **ADDRESSES** during regular hours (7:45 a.m. to 4:15 p.m.), Monday through Friday, except holidays.

Before including your address, phone number, email address, or other personal identifying information in your comment, you should be aware that your entire comment—including your personal identifying information—may be made publicly available at any time. While you can ask us in your comment to withhold your personal identifying information from public review, we cannot guarantee that we will be able to do so.

II. Background

Under applicable law, royalties are owed on all production removed or sold from Federal and Indian oil and gas leases. The basis for those royalty payments is the measured production from those leases. In fiscal year (FY) 2014, onshore Federal oil and gas leases produced about 148 million barrels of oil, 2.48 trillion cubic feet of natural gas, and 2.9 billion gallons of natural gas

liquids, with a market value of more than $27 billion and generating royalties of almost $3.1 billion. Nearly half of these revenues were distributed to the States in which the leases are located. Leases on tribal and Indian lands produced 56 million barrels of oil, 240 billion cubic feet of natural gas, 182 million gallons of natural gas liquids, with a market value of over $6 billion and generating royalties of over $1 billion that were all distributed to the applicable tribes and individual allottee owners.

Given the magnitude of this production and the BLM's statutory and management obligations, it is critically important that the BLM ensure that operators accurately measure, properly report, and account for that production. The BLM is proposing updates to Order 3's requirements because they are necessary to reflect changes in oil measurement practices and technology since Order 3 was first promulgated.[1] Specifically, this proposed rule is designed to ensure the proper and secure handling of production from Federal and Indian (except Osage) oil and gas leases. The proper handling of production is essential to the accurate measurement, proper reporting, and accountability that are necessary to ensure that the American public, as well as Indian tribes and allottees, receive the royalties to which they are entitled on oil and gas produced from Federal and Indian leases, respectively.

Order 3 is one of seven Onshore Oil and Gas Orders that the BLM issued under its regulations at 43 CFR part 3160.[2] Order 3 primarily supplements the regulations at 43 CFR 3162.4 (records and reports), 3162.5 (environmental safety), 3162.7 (disposition and measurement of oil and gas production and site security on Federal and Indian (except Osage Tribe) oil and gas leases), subpart 3163 (non-compliance, assessments, and civil penalties), and subpart 3165 (relief, conflicts, and appeals). To date, the BLM's Onshore Orders have been published in the **Federal Register**, both for public comment and in final form, but they have not been codified in the CFR. With this rule, the BLM is now proposing to replace Order 3 and update and codify the requirements regarding site security, as explained below.

In 2007, the Secretary appointed an independent panel—the Subcommittee on Royalty Management (Subcommittee)—to review the Department's procedures and processes related to the management of mineral revenues and to provide advice to the Department based on that review.[3] In a report dated December 17, 2007, the Subcommittee determined that the BLM's guidance regarding production accountability is ''unconsolidated, outdated, and sometimes insufficient'' (Subcommittee report, p. 30). The Subcommittee report found that this results in inconsistent and outmoded approaches to production accountability tasks and potential reductions in royalty revenue.

The Subcommittee report expressed concern that the applicable ''BLM policy and guidance is outdated'' and ''some policy memoranda have expired'' (Subcommittee report, p. 31). For example, the BLM issued Order 3 in 1989 and has not updated it since, even though BLM and industry practices and technologies have changed significantly in the intervening 25 years. The Subcommittee also expressed concern that ''BLM policy and guidance have not been consolidated in a single document or publication'', which has led to the ''BLM's 31 oil and gas field offices using varying policy and guidance'' (id.). For example, ''some BLM State Offices have issued their own 'Notices to Lessees' for oil and gas operations'' (id.). While the Subcommittee recognized that such Notices to Lessees may have a positive effect on some oil and gas field operations, it also observed that they necessarily ''lack a national perspective and may introduce inconsistencies among State [Offices]'' (id.).

The Subcommittee specifically recommended that the BLM re-evaluate its regulations and update its policy and guidance on production accountability, including requiring that requests to commingle production from multiple leases, unit participating areas (PAs), or communitization agreements identify allocation among zones (Subcommittee report, p. 32). The Subcommittee also recommended that the BLM re-evaluate its policies and guidance for royalty-free use of gas in lease operations. It also specifically recommended that the BLM establish a workgroup to evaluate Order 3. In response, the Department formed a fluid minerals team, comprised of Departmental employees who are oil and gas experts. Based on its review, the team determined that Order 3 should be updated.

In addition to the Subcommittee report, the GAO issued findings and recommendations addressing similar issues in 2010 (Report to Congressional Requesters, *Oil and Gas Management, Interior's Oil and Gas Production Verification Efforts Do Not Provide Reasonable Assurance of Accurate Measurement of Production Volumes* GAO–10–313 (GAO Report 10–313)).

The GAO found that Interior's measurement regulations and policies do not provide reasonable assurance that oil and gas are accurately measured. Regarding matters relevant to Order 3, the report found that the BLM lacks regulatory or policy requirements for operators to clearly identify measurement points, creating challenges for the BLM in verifying production (GAO Report 10–313, p. 34). It also found that the BLM does not have sufficient national policies and a consistent process for approving arrangements that allow operators to commingle production from multiple Federal, Indian, State, and private leases, which also makes it difficult for the agency to verify production (GAO Report 10–313, p. 36). The GAO specifically recommended that: (1) The BLM develop guidance clarifying when Federal oil and gas may be commingled and establish standardized measurement methods for such circumstances so that production can be adequately measured and verified; (2) BLM staff confirm that commingling agreements are consistent with Interior guidance before they are approved, and that the agreements facilitate key production verification activities; and (3) The BLM track all onshore meters, including information about meter location, identification number, and owner to help ensure that Interior is consistently tracking where and how oil and gas are measured.

The GAO reiterated some of these concerns in 2015 (Report to Congressional Requesters, *Oil and Gas Resources, Interior's Production Verification Efforts and Royalty Data Have Improved, But Further Actions Needed* GAO–15–39 (GAO Report 15–39)). In the 2015 report, the GAO acknowledged the improvements BLM had made in its processes and policies (*e.g.,* issuing additional guidance regarding commingling approvals in 2013), but reiterated its view of the importance of the BLM undertaking an

[1] This proposed rule would replace Order 3, which was published in the **Federal Register** on February 24, 1989 (54 FR 8056), and which has been in effect since March 27, 1989.

[2] These regulations provide for the issuance of Onshore Oil and Gas Orders to ''implement and supplement'' the regulations found in part 3160. 43 CFR 3164.1(a). The Onshore Orders apply nationwide to all Federal onshore and Indian (except Osage Tribe) oil and gas leases.

[3] The Subcommittee was commissioned to report to the Royalty Policy Committee, which is chartered under the Federal Advisory Committee Act to provide advice to the Secretary and other departmental officials responsible for managing mineral leasing activities and to provide a forum for the public to voice concerns about mineral leasing activities.

update of its regulations related to measurement and site security (GAO Report 15–39, pp. 31–32).

Based in part on its concerns that the BLM's production verification efforts do ''. . . not provide reasonable assurance that operators are accurately measuring and reporting'' the volumes of oil and gas produced from Federal and Indian leases, the GAO included the BLM's onshore oil and gas program on its High Risk List in 2011 (Report to Congressional Committees, *High Risk Series, An Update,* GAO–11–278 (GAO Report 11–278), p. 15). Because the GAO's recommendations have not yet been fully implemented, the onshore oil and gas program has remained on the High Risk List in subsequent updates in 2013 (Report to Congressional Committees, *High Risk Series, An Update,* GAO–13–283) and 2015 (Report to Congressional Committees, *High Risk Series, An Update,* GAO–15–290).

In addition to concerns expressed by other parties, the BLM also recognizes, based on its own field experience, that its site security requirements need to be strengthened. For example, on the issue of the point of royalty measurement, it is not uncommon for a BLM inspector, a lease operator, and field employees to all have different understandings of where that point is on a given lease because Order 3 does not require operators to formally identify and obtain BLM approval for a specific measurement point. One result of this confusion is that BLM inspectors sometimes drive out to remote locations to witness calibrations on meters that they believed were measuring production for purposes of determining royalty when, in fact, they were not. The inspectors may not discover the discrepancies until months or even years later, during audits when operators submit their production accountability paperwork and the meter information does not match. This can create needless uncertainties in production accounting and verification and can increase the time spent on individual inspections and audits by both operators and the BLM, which strains the BLM's limited resources, while also requiring additional response and resources on the part of operators.

Similarly, with respect to existing commingling approvals, the BLM recognizes that in the absence of uniform national guidance, some of the existing BLM-approved commingling agreements may not provide the production data that the BLM needs to independently verify production that is attributable to the Federal or Indian leases covered by those agreements. The absence of this data limits the BLM's ability to fulfill its obligation to ensure that all production from Federal and Indian (except Osage Tribe) oil and gas leases is properly accounted for and that royalties are properly calculated.

Many of the provisions in this proposed rule were developed in response to the BLM's experience and the recommendations made by the Subcommittee and the GAO. Others were developed by the BLM to enhance and clarify some of Order 3 requirements in response to changes in technology and industry practice, and changes to applicable statutory requirements. The provisions discussed below also respond to comments received during a series of public meetings held by the BLM on April 24 and 25, 2013, to discuss proposed revisions to Orders 3, 4, and 5. In aggregate, these provisions will help ensure that the production of Federal and Indian (except Osage Tribe) oil and gas is adequately accounted for. By replacing the patchwork of guidance developed by BLM state and field offices, the provisions of this proposed rule would also provide operators with a level of consistency as to the requirements applicable to their operations on Federal and Indian (except Osage Tribe) lands nationwide.

III. Discussion of the Proposed Rule

A. General Overview

The following table provides an overview of the changes contemplated as part of this proposed rule and identifies the substantive proposed changes relative to Order 3.

BILLING CODE 4310–84–C

Order 3	Proposed Rule	Substantive Changes
I.A. Authority	43 CFR 3170.1 Authority	The proposed rule would update the authority section.
I.B. Purpose	(No separate section in the proposed rule.)	
I.C. Scope	43 CFR 3170.2	The proposed rule would add language regarding Indian Mineral Development Act agreements and Tribal Energy Resource Agreements.
II. Definitions	43 CFR 3170.3 and 3173.1	The proposed rule would add definitions of key terms used in the rule as well as a list of acronyms used. Terms for which new definitions would be added include: "allocation," "audit trail," "commingling," "communitization agreement," "condition of approval (COA)," "days," "facility measurement point (FMP)," "incident of noncompliance (INC)," "land description," "oil," "maximum ultimate economic recovery," "notice to lessees and operators," "off-lease measurement," "participating area," "production," "purchaser," "source record," "transporter," and "variance."
III. Requirements	43 CFR subpart 3173	
III.A. Storage and Sales Facilities – Seals	43 CFR 3173.2	
III.A.1.a.	None	The proposed rule would remove language in Order 3 referring to American Petroleum Institute (API) practices outlined in manual 12 R1 because the BLM anticipates referring to them in a new proposed oil measurement rule to replace Order 4 that the BLM anticipates issuing separately.

Order 3	Proposed Rule	Substantive Changes
III.A.1.b.	43 CFR 3173.2(a)	No significant change
III.A.1.c.	43 CFR 3173.2(b)	The proposed rule would require that appropriate valves be in an operable condition and accurately reflect whether the valve is open or closed.
III.A.1.d. Exclusion for waste oil.	43 CFR 3173.2(c)(3).	No significant change.
III.A.1.e. and f.	43 CFR 3173.2(c)	The proposed rule would make minor changes to clarify the exclusions to sealing appropriate valves.
III.A.1.g.	43 CFR 3173.2(a)	No significant change.
None	43 CFR 3173.2(d)	The proposed rule would add a provision that prohibits tampering with any appropriate valve (i.e., those valves that must be effectively sealed during the production or sales phase). Under the proposed rule, tampering with an appropriate valve could result in an assessment of civil penalties for knowingly or willfully preparing, maintaining, or submitting false, inaccurate, or misleading reports, records, or information under 30 U.S.C. 1719(d)(1) and existing 43 CFR 3163.2(f)(1), or knowingly or willfully removing, transporting, using, or diverting oil or gas from a lease site without valid legal authority under 30 U.S.C. 1719(d)(2) and existing 43 CFR 3163.2(f)(2), together with any other remedies provided by law.
None	43 CFR 3173.9	The proposed rule would require operators to maintain an inventory of the total observed volume in storage and would specify the records that an operator must maintain for each seal.

Order 3	Proposed Rule	Substantive Changes
III.A.2. Enforcement Provisions	43 CFR 3170.9	The proposed rule would remove all specific reference to: "Violation" (major or minor), "Corrective Action" (what needs to be done to resolve the violation), and "Normal Abatement Period" (how much time is allowed to correct the violation). The BLM will address these issues in an internal inspection and enforcement handbook, and, as appropriate, manuals or instructional memoranda (IMs). The new proposed section (43 CFR 3170.9) would provide that noncompliance with any requirements of part 3170 or any order issued thereunder may result in enforcement actions under 43 CFR subpart 3163 or any other remedy available under applicable law or regulation.
III.B. Lease Automatic Custody Transfer (LACT) Systems - Seals	43 CFR 3173.3	The proposed rule would expand the list of components that require seals.
III.C. Removal of Crude Oil from Storage Facilities by Means Other than Through a LACT.	43 CFR 3173.5	No significant change.
III.C.1.a. and b.	None	The proposed rule would remove run ticket requirements for quantity and quality because they would be covered in greater detail in the proposed new rule that is anticipated to replace Order 4.
III.C.1.c.	43 CFR 3173.5	No significant change.
III.D. Bypass Around Meters	43 CFR 3170.4	The prohibition against bypassing meters would remain; however, language would be added that would prohibit tampering with any measurement device, component of a

Order 3	Proposed Rule	Substantive Changes
		measurement device, or measurement process.
III.E. Theft or Mishandling of Oil	43 CFR 3173.8	The proposed rule would require purchasers and transporters, in addition to operators, to report incidents of apparent theft or production mishandling.
None	43 CFR 3173.6.	The rule proposes new standards for water-draining operations.
III.F Self-Inspection	None	This proposed rule would eliminate self-inspections.
None	43 CFR 3173.7	The rule proposes new standards for hot-oiling, clean-up, and completion operations.
III.G. Recordkeeping	43 CFR 3170.7	The proposed rule would require purchasers and transporters to comply with the same standards as operators for keeping, retaining, and submitting records associated with Federal and Indian leases. It would also clarify record retention requirements. Consistent with applicable statutory requirements, the proposed rule would require records generated for Federal leases to be maintained for at least 7 years, and records generated for Indian leases to be maintained for at least 6 years. These proposed changes would require the BLM to amend its regulations at 43 CFR 3162.4-1 by revising paragraph (d) and adding a new paragraph (e). The BLM is also proposing to amend 43 CFR 3163.2 and 43 CFR 3165.3 to include purchasers and transporters where appropriate.
III.H. Site Security Plan	None	This proposed rule would eliminate the need for a Site Security Plan. In its place, the rule would require additional recordkeeping and documentation relevant to site security in

Order 3	Proposed Rule	Substantive Changes
		connection with specific functions and operations. This proposed change would require the BLM to remove 43 CFR 3162.7-5(c) from its regulations. (Various provisions of the proposed rule, taken together, would result in removing all of 43 CFR 3162.7-5.)
III.I. Site Facility Diagrams	43 CFR 3173.11	This proposed rule would increase the level of detail contained in site facility diagrams currently required under 43 CFR 3162.7-5(d), by requiring information about the manufacturer, model, and serial number of each major component involved in royalty-free use of production in lease operations. It would also require lessees and operators to sign the site facility diagrams, certifying their accuracy. These proposed revisions would require the BLM to remove 43 CFR 3162.7-5(d) from its regulations.
None	43 CFR 3173.10	The proposed rule would add a new requirement that operators to submit a Form 3160-5 electronically when submitting for the record or requesting approval for: Site facility diagrams, FMP numbers, FMP amendments, off-lease measurement, or commingling and allocation approvals (CAAs).
None	43 CFR 3173.12	This proposed rule would require operators to obtain an FMP number for all measurement points. This requirement would be phased in according to the production levels of the properties the measurement point serves.
None	43 CFR 3173.13	This proposed rule would require operators to label FMPs with the FMP number, use the FMP number in required recordkeeping, and submit a Form 3160-5 to amend an FMP that details any modifications to the FMP within 20 business days after the change.

Order 3	Proposed Rule	Substantive Changes
None	43 CFR 3173.14 through 43 CFR 3173.21	This proposed rule would provide specific standards and requirements for surface and downhole commingling and allocation approvals of production from different leases, unit PAs, or communitized areas (CAs) that are consistent with the BLM's existing guidance as reflected in Instruction Memorandum (IM) 2013-152. Unlike the existing IM, the provisions of this proposed rule would establish standards for both new and existing commingling agreements.
None	43 CFR 3173.22 through 3173.28	This proposed rule would provide specific standards and requirements for approval of off-lease measurement of production from leases, unit PAs, CAs, or CAAs.
None	43 CFR 3173.29	This proposed rule would require the imposition of immediate assessments upon discovery of certain instances of noncompliance. For the first time, purchasers and transporters would be subject to immediate assessments if they: (1) Do not comply with requirements for keeping, retaining, and submitting accurate records associated with Federal and Indian leases; (2) Remove Federal seals without the Authorized Officer's (AO) or Authorized Representative's (AR) prior approval; or (3) Fail to report theft or mishandling of production to the BLM.
IV. Federal Seals	43 CFR 3173.4 and 3173.29	The proposed rule would increase immediate assessments from $250 to $1,000 for removing a Federal seal without the AO or AR's prior approval.
V. Variances from Minimum Standards	43 CFR 3170.6	The proposed rule contains language clarifying that the BLM has the right to rescind variances and modify conditions of approval due to changes in Federal law, technology, regulation, BLM policy, field operations, noncompliance, or other reasons.

Order 3	Proposed Rule	Substantive Changes
		With respect to variance requests themselves, the proposed rule would require that they be submitted separately from any plans or applications, such as for Master Development Plans, applications for permits to drill (APDs), or applications for rights-of-way. Finally, the proposed rule would strengthen and standardize the criteria the BLM uses for considering and granting variances.
None	43 CFR 3170.8	The proposed rule would specifically state that "BLM decisions, orders, assessments, or other actions under the regulations in this part are administratively appealable under the procedures prescribed in 43 CFR 3165.3(b) and 3165.4 and part 4."

BILLING CODE 4310–84–P

B. Section-by-Section Analysis

This proposed rule would be codified primarily in a new 43 CFR subpart 3173 within a new part 3170. The BLM is also concurrently preparing and anticipates issuing separate proposed rules to update and replace Onshore Oil and Gas Order 4 (oil measurement) and Onshore Oil and Gas Order 5 (gas measurement). Those proposed rules are anticipated to be codified at new 43 CFR subparts 3174 and 3175, respectively. As a result, the proposed rule also includes a new subpart 3170 that would contain definitions of certain terms and common provisions, *i.e.,* provisions prohibiting by-pass of and tampering with meters; procedures for obtaining variances from the requirements of a particular rule; requirements for recordkeeping, records retention, and submission; and administrative appeal procedures.

In addition, the proposed rule would also make several changes to various provisions in 43 CFR part 3160. Proposed changes to 43 CFR 3162.3–2, 3162.4–1, 3162.6, 3162.7–1, 3163.2, and 3163.5 are discussed in connection with the proposed new subpart 3170 or 3173 provision to which the particular change relates. Other changes to provisions in part 3160 are discussed at the end of this section-by-section analysis.

Subpart 3170—Onshore Oil and Gas Operations; General and Related Provisions

Section 3170.1 Authority

Proposed § 3170.1 would identify the various grants of rulemaking authority in the Federal and Indian mineral leasing statutes and related statutes that give the Secretary authority to promulgate this rule.

Section 3170.2 Scope

Proposed § 3170.2 would explain that the regulations in part 3170 would apply to all Federal onshore and Indian oil and gas leases (except those of the Osage Tribe), and, with certain exceptions, to agreements for oil and gas under the Indian Mineral Development Act and agreements under a Tribal Energy Resource Agreement entered into with the Secretary. In addition, State or private tracts committed to a federally approved unit or communitization agreement as defined by or established under 43 CFR subpart 3105 or 43 CFR part 3180 also would be subject to the rule.

Section 3170.3 Definitions and Acronyms

This proposed section would define terms and acronyms used in more than one of the subparts of part 3170 that the BLM has proposed here (subpart 3173) or anticipates proposing (subparts 3174 (oil measurement) and 3175 (gas measurement)).

Of these new terms, the proposed definition of "facility measurement point (FMP)" merits discussion here; other terms are discussed below. Under the proposed rule, an FMP is a "BLM-approved point where oil or gas produced from a Federal or Indian lease, unit, or CA is measured and the measurement affects the calculation of the volume or quality of production on which royalty is owed." As explained below, the proposed rule sets forth a process for an operator of a new or an existing facility to apply for approval of an FMP and issuance of an FMP number in proposed § 3173.12. Because proposed § 3173.12 would require operators of existing facilities to apply for an FMP in stages over a 27-month period, it will require 3 years from the effective date of the final rule for the BLM to receive, evaluate, and act on FMP applications for existing facilities. Therefore, for purposes of compliance with other provisions of this proposed rule, during this interim period, the proposed definition of an FMP makes clear that an FMP "also includes a meter or measurement facility used in the determination of the volume or quality of royalty-bearing oil or gas produced before BLM approval of an FMP under § 3173.12 of this part."

While meters used in determining the volume or quality of production include allocation meters,[4] the proposed

[4] An allocation meter is a meter that measures production from a particular lease, unit, unit PA, or CA that is commingled with production from

Continued

definition of FMP does not include allocation facilities that are part of a commingling and allocation approval issued pursuant to proposed § 3173.15 below or that were approved after July 9, 2013. Since July 9, 2013, under BLM Instruction Memorandum (IM) 2013–152, issued on that date, BLM authorized officers may approve only those commingling requests that: (1) Have no royalty impacts (*e.g.,* commingled properties have the same mineral ownership, royalty rate, and revenue distribution); (2) Involve ''low-volume properties'' [5]; or (3) Involve circumstances where overriding considerations of continued production outweigh the potential inaccuracies of the allocation method. As explained below, proposed § 3173.15 carries forward the requirements of IM 2013–152 related to the approval of commingling requests. For commingling requests that meet these requirements, it is not necessary for the allocation facilities to meet the applicable oil measurement or gas measurement standard. Thus, it is not necessaryfor these facilities (*i.e.,* those approved after July 9, 2013 or pursuant to proposed 3173.15) to be regarded as FMPs. Allocation meters or facilities approved before July 9, 2013, must meet the standards of the applicable current Order and would have to meet the standards of the proposed rules according to the prescribed timeframes for compliance; therefore, they will continue to be FMPs.

Section 3170.4 Prohibitions Against By-Pass and Tampering

Proposed § 3170.4 would strengthen the existing prohibition against meter by-passes in section III.D. of Order 3 by adding language that would prohibit tampering with any measurement device, component of a measurement device, or measurement process. Tampering would include any adjustment or alteration to the meter or measurement device or measurement process that could introduce bias into the measurement or affect the BLM's ability to independently verify volumes or qualities reported. Examples of tampering include installing an orifice plate in a gas meter with the bevel upstream, adjusting a transducer to read higher or lower than a certified test device, entering incorrect information into the configuration log of an electronic gas measurement system, submitting derived integral values on a volume statement in lieu of raw data, or making analogous adjustments or alterations to an oil measurement system.

Section 3170.5 Industry Standards Incorporated by Reference

§ 3170.5 would be reserved for potential future incorporation by reference of standards that would apply to more than one of the subparts of part 3170.

Section 3170.6 Variances

Proposed § 3170.6 would make the BLM's existing process and regulations for granting variances from the minimum standards of this rule more clear and uniform.

Proposed § 3170.6(a)(1) through (3) would prescribe the requirements for submitting a request for a variance from a requirement in the regulations in part 3170. Importantly, paragraph (a)(2) would require that a request for a variance be submitted as a separate document from any plans or applications. A request for a variance ''buried'' in another document, such as a request submitted as part of a master development plan, application for permit to drill, right-of-way application, or other applications for approval rather than submitted separately would not be considered. Approval of a plan or application that contains a request for a variance would not constitute approval of the variance.

Proposed § 3170.6(a)(4) would strengthen and standardize the criteria the BLM uses for granting variances. Under Order 3, the AO is required to make only one determination—whether or not the variance request meets or exceeds the objectives of the applicable minimum standard. Under this proposed paragraph, the AO still would have to make that determination before granting a variance. Additionally, the proposed change would require the AO to make two more determinations before granting a variance—that issuing a variance would not adversely affect royalty income or production accountability and is consistent with maximum ultimate economic recovery.

Proposed § 3170.6(a)(5) and (6) would specify that granting or denying a variance is entirely within the BLM's discretion, and that a variance from a requirement in a regulation does not constitute a variance to any other regulations, including Onshore Oil and Gas Orders.

Proposed § 3170.6(b) would make clear that the BLM has the right to rescind a variance or modify any condition of approval of a variance due to changes in Federal law, technology, regulation, BLM policy, field operations, noncompliance, or other reasons.

Section 3170.7 Required Recordkeeping, Records Retention and Records Submission

Proposed § 3170.7 would update BLM regulations to reflect the records retention requirement for Federal oil and gas leases that Congress established in 1996 amendments to the Federal Oil and Gas Royalty Management Act (FOGRMA).

Paragraphs (a) and (b) would establish the coverage of the records-retention requirement relative to both persons covered and the time period in which records are generated. Purchasers and transporters would be held to the same minimum standards as operators for recordkeeping, records retention, and records submission—*i.e.*, to maintain all records that are relevant to determining the quality, quantity, disposition, and verification of production from Federal and Indian leases. Section 103(a) of FOGRMA, 30 U.S.C. 1713(a), requires persons involved in transporting and purchasing oil or gas through the point of first sale or the point of royalty computation, whichever is later (along with persons involved in producing or selling), to ''establish and maintain any records, make any reports, and provide any information that the Secretary may, by rule, reasonably require.'' Order 3, however, does not expressly require transporters and purchasers to establish and maintain any records (except for the requirement in section III.C.2.c. that truck drivers transporting production have information about the load in their possession (see 30 U.S.C. 1712(c)(1)).

Under proposed § 3170.7(c), records pertaining to Federal leases, units, or CAs would have to be maintained for at least 7 years, subject to applicable statutory requirements for further retention under certain circumstances (see 30 U.S.C. 1724(f)), as required under the 1996 amendments to FOGRMA. Under proposed § 3170.7(d), records pertaining to Indian leases, units, or CAs would have to be maintained for at least 6 years, subject to applicable statutory requirements for

other leases, units, unit PAs, or CAs before the point of royalty measurement, *i.e.,* the meter that measures the production for purposes of determining royalty. The production measured at the point of royalty measurement is then allocated back to the respective contributing properties on the basis of each allocation meter's proportion of the total production measured by all allocation meters.

[5] As explained below, ''low-volume properties'' include leases, unit PAs, or CAs that do not produce sufficient volumes for the operator to realize from continued production a sufficient rate of return on the investment required to achieve non-commingled measurement, such that a prudent operator would opt to plug a well or shut in the lease, unit PA, or CA if the commingling request were not approved. In these situations, the economic considerations of continued production outweigh the inaccuracies of the allocation method.

further retention under certain circumstances (see 30 U.S.C. 1713(b)). The records-retention requirement on Indian leases would be unchanged because the 1996 amendments, by their express terms, applied only to Federal leases and not to Indian leases.

Proposed § 3170.7(e) would address the relationship of these two requirements for units and CAs that contain both Federal and Indian leases.

Proposed § 3170.7(f) would require the record holders to maintain an audit trail.

Under proposed § 3170.7(g) and (h), purchasers and transporters also would be required to place the new FMP numbers on all records associated with Federal and Indian leases, units, or CAs, after the BLM has assigned them, and to provide these records to the BLM upon request.

These changes are proposed to ensure that all records—whether they are created by lessees, operators, transporters, or purchasers—are clear, accurate, and readily available to the BLM. Under existing requirements, if BLM staff, in the course of auditing and verifying production, needs to review transporter or purchaser records, staff typically must ask the operator or lessee to provide the documents. Many transporters and purchasers have their own internal systems for identifying sales measurement points, with which operators may not be familiar. Sometimes operators do not maintain their own records properly, preferring instead to rely on the transporters' and purchasers' records. This has the potential to create long delays when transporters and purchasers fail to respond quickly to operators' document requests. Sometimes operators go out of business or are acquired by other companies and their records are destroyed, making it impossible for BLM staff to verify production. The BLM believes that it is important for everyone involved in the production and sale of oil and gas produced from Federal and Indian leases to be responsible for maintaining and providing their own records.

If a purchaser or transporter fails to maintain and submit records as required under this proposed rule, the purchaser or transporter would be subject to civil penalties under Section 109 of FOGRMA, 30 U.S.C. 1719. Consequently, the BLM is proposing to amend its civil penalty rules at 43 CFR 3163.2 to designate the first sentence of paragraph (a) of the existing § 3163.2 as paragraph (a)(1), and to add a new paragraph (a)(2). The second sentence of the existing paragraph (a) (pertaining to the maximum amount of the penalty if the violation is not corrected within 20 days of the date of notice) would be redesignated as paragraph (b)(1). The existing paragraph (b) (pertaining to the maximum amount of the penalty if the violation is not corrected within 40 days of the date of notice) would be redesignated as paragraph (b)(2). References to purchasers and transporters would be added to the penalty amount provisions in paragraph (b).

Similarly, the BLM proposes to add to the notice requirements of existing regulations at 43 CFR 3165.3 a provision regarding notice to a purchaser or transporter (who is not an operating rights owner or operator) of failure to comply with records maintenance or production requirements. The BLM proposes to divide the several sentences of the existing paragraph (a) into numbered subparagraphs. After the first sentence, which would be redesignated as paragraph (a)(1) (and rephrased into active voice), the BLM proposes to add a new paragraph (a)(2). Enforcement of recordkeeping violations taken against an entity other than the lessee or operator under these proposed provisions also would be addressed in the proposed inspection and enforcement handbook being developed. These enforcement actions would include the issuance of Incidents of Noncompliance (INCs) and the assessment of civil penalties.

In 43 CFR 3162.4–1, the BLM is proposing to revise paragraph (a) to reflect that the new recordkeeping requirements also would apply to ''source records'' that are relevant to ''determining and verifying the quality, quantity, and disposition of production from or allocable to Federal or Indian leases.'' Paragraph (d) would be revised to establish the new records retention period, and would mirror for part 3160 the provisions in paragraphs (c) through (e) of proposed § 3170.7. A new paragraph (e) would be added that would list the ''record holders'' who would be subject to the new recordkeeping requirements. Additionally, the BLM is proposing to remove paragraph (f) from 43 CFR 3162.7–1, Disposition of production, which refers to the 6-year retention period, since the initial statutory retention period is now 7 years, as would be prescribed in the proposed amendment to § 3162.4–1 and in proposed § 3170.7.

Section 3170.8 Appeal Procedures

Proposed § 3170.8 would provide that BLM decisions, orders, assessments, or other actions under the proposed part 3170 are administratively appealable (first to the BLM State Director and then to the Interior Board of Land Appeals) under 43 CFR 3165.3(b), 3165.4, and part 4.

Section 3170.9 Enforcement

Proposed § 3170.9 would provide that noncompliance with any requirements of part 3170 or any order issued thereunder may result in enforcement actions under 43 CFR subpart 3163 or any other remedy available under applicable law or regulation.

Subpart 3173—Requirements for Site Security and Production Handling and Related Provisions

Section 3173.1 Definitions and Acronyms

Section 3173.1 of the proposed rule would define the terms and acronyms that are unique to proposed subpart 3173. The section would adopt the same definitions of some of the terms defined in Order 3, with some minor revisions to either simplify or clarify those definitions. Several of the terms defined in Order 3 would be defined in proposed § 3170.3.

The proposed rule adds a definition of ''low-volume property,'' which is intended to define one category of circumstances under which commingled measurement of production from a lease, unit PA, or CA may be justified, even though it would not meet the conditions of proposed § 3173.14(a)(1) regarding mineral interest ownership of commingled production. The proposed rule also provides a definition for ''land description.''

Section 3173.2 Storage and Sales Facilities—Seals

Paragraphs (a) and (b) of proposed § 3173.2 would require any lines entering or leaving any oil storage tank or storage facility to have valves capable of being effectively sealed. These paragraphs would prescribe which valves must be effectively sealed during which operational phases (production, sales, water draining, or hot oiling). Paragraph (c) identifies the specific types of valves that are not considered ''appropriate valves'' (*i.e.*, valves that must be sealed during the production phase or the sales phase) for purposes of this requirement. The requirements of paragraphs (a) through (c) would largely correspond to the existing requirements in Order 3, with some refinements.

Paragraph (d) would prohibit tampering with an ''appropriate valve,'' and would provide that tampering may result in assessment of a civil penalty for knowingly or willfully preparing, maintaining, or submitting false,

inaccurate, or misleading information under Section 109(d)(1) of FOGRMA, 30 U.S.C. 1719(d)(1), and 43 CFR 3163.2(f)(1), or for knowingly or willfully taking, removing, or diverting oil or gas from a lease without valid legal authority under Section 109(d)(2) of FOGRMA, 30 U.S.C. 1719(d)(2), and 43 CFR 3163.2(f)(2).

Section 3173.3 Oil Measurement System Components—Seals

Proposed § 3173.3 would identify a nonexclusive list of the components used in LACT meters or Coriolis oil measurement systems that must be effectively sealed to indicate tampering.

Section 3173.4 Federal Seals

Paragraph (a) of proposed § 3173.4 would codify the authority in section IV of Order 3 for the BLM to place a Federal seal on any appropriate valve, sealing device, or oil meter system component that does not comply with the requirements of proposed § 3713.2 or § 3173.3. Paragraph (b) clarifies that the placement of a Federal seal does not relieve the operator of the requirement to comply with § 3713.2 or § 3173.3. Paragraph (c) would prohibit the removal of a Federal seal without BLM approval.

Section 3173.5 Removing Production From Tanks for Sale and Transportation by Truck

Consistent with the existing requirements of section III.C.1.c. of Order 3, paragraphs (a) and (b) of proposed § 3173.5 would identify who must possess the information that would be required by § 3174.12 of this part (which the BLM intends to propose separately) when production is removed from storage tanks for transportation by truck. Paragraph (c) would make the purchaser or transporter responsible for the entire contents of a tank until it is resealed.

Section 3173.6 Water-Draining Operations

Proposed § 3173.6 would require that specific information be recorded when water is drained from tanks that hold hydrocarbons. Under existing regulations, the operator is required to record only the date, seal number removed, new seal number installed, and the reason for draining. The operator currently is not required to record the volume of hydrocarbons that are in the tank before and after water is drained. This could lead to hydrocarbons being drained with the water and removed without proper measurement and accounting, and without royalties being paid. This proposed rule would require operators to record the volume of hydrocarbons that are in the tank both before and after water is drained.

Section 3173.7 Hot Oiling, Clean-up, and Completion Operations

Proposed § 3173.7 would require that specific information be recorded when hydrocarbons are removed from storage and used on the lease, unit, or CA for hot oiling, clean-up, and completion operations, including the volume of hydrocarbons removed from storage and expected to be returned to storage.

Under existing requirements, the operator is required to record only the date, seal number removed, new seal number installed, and reason for removing oil for hot-oiling, clean-up, or completion operations. The operator currently is not required to record the volume of hydrocarbons that is removed from storage and is expected to be returned. This could lead to the volume of produced hydrocarbons being counted twice; first when it was initially produced then later after it is returned to storage.

Section 3173.8 Report of Theft or Mishandling of Production

Paragraph (a) of proposed § 3173.8 would require transporters and purchasers, along with operators, to report incidents of theft and mishandling of production to the BLM whenever they or their employees discover it. Such reports may be made orally or through a ''written incident report.'' In the proposed rule any oral reports must be followed by a written report within 10 business days. This reporting requirement is important because sometimes transporters and purchasers are the first ones to discover theft and mishandling of production or to recognize suspicious activity. Proposed paragraph (b) would specify the information that must be included in a written incident report.

Section 3173.9 Required Recordkeeping for Inventory and Seal Records

Paragraph (a) of proposed § 3173.9 would require operators to measure and record the total observed volume in storage at the end of each calendar month. Proposed paragraph (b) would specify the records that an operator must maintain for each seal.

Section 3173.10 Form 3160–5, Sundry Notices and Reports on Wells

Proposed § 3173.10 would require all parties involved in Federal and Indian oil and gas production to submit a Form 3160–5 electronically to the BLM for their site facility diagrams, requests for FMP designations, requests for CAAs, requests for off-lease measurement, and any amendments to the diagrams or requests. This would, in the long run, increase efficiencies throughout BLM field offices for both the BLM and operators by making the diagrams easier to track and more accessible to inspectors in the field. This new requirement would also make it easier for the BLM to keep track of equipment and operational changes at a given facility and ensure that the parties are complying with Federal laws, rules, and regulations, while at the same time reducing the need for operators to respond to requests for information and making what information is needed easier to submit. Operators who are small businesses that do not have access to the Internet would be exempt from this requirement. BLM notes that the Office of Natural Resources Revenue (ONRR) already requires operators producing oil and gas from onshore Federal and Indian leases onshore to file their monthly Oil and Gas Operations Reports (OGORs) electronically, and thus this requirement is expected to be relatively easy to implement.

This proposed rule would increase the number of companies and company representatives using the e-filing capabilities of the BLM's Automated Fluid Minerals Support System (AFMSS). Currently, filing parties inconsistently use this e-filing system because it is not required. Preliminary estimates are that the BLM would see a tenfold increase in e-filings, from 500 to 5,000.

Section 3173.11 Site Facility Diagrams

Paragraphs (a) through (c) of proposed § 3171.11 would set forth the requirements for the content and format of site facility diagrams. These requirements are important because inspection and verification of company-submitted site facility diagrams is one of the BLM's primary mechanisms for ensuring operators are complying with measurement regulations and policy. The requirements in the proposed section would update and replace Order 3's Site Security Plan. Currently, the BLM requires operators to provide generalized diagrams showing each piece of equipment being used at a facility, including connections between each piece of equipment, valve positions on production storage tanks (sales valves, drain valves, equalizers, and overflow valves), and their relative positions to each other. Tank valve positions (open or closed) are dependent upon whether the tank is in

the production, sales, or drain phase of operations.

Under proposed § 3173.11, new site facility diagrams would, in addition to the drawings, include important and specific information such as the FMP number; land description; Federal or Indian lease, unit, or CA number; site equipment with any corresponding serial identification numbers and manufacturer's consumption ratings; a reasonable royalty-free use determination; and a signature block. This more detailed information would provide the BLM with a more useful tool to achieve improved production accountability.

In addition to the requirements above, proposed § 3173.11(c) would also allow the BLM, for the first time, to verify royalty-free-use volumes reported by the operator on OGORs. Under the applicable statutes and lease terms, the portion of the oil and gas produced that is used to power operations on the lease, CA, or unit, such as using natural gas to power drilling and pumping equipment, is not royalty-bearing. This use of oil and gas is referred to as ''royalty-free use.''

Currently, operators provide estimates of their royalty-free-use volumes to ONRR each month, but the BLM lacks an ability to verify those estimates. Proposed § 3173.1(c)(11) would require operators to report to the BLM on their site facility diagrams what equipment is being used on the lease and how they determine the volume of oil or gas used royalty free by that equipment (based on equipment manufacturers' fuel-use ratings), if the volume is not measured. This new requirement would provide greater consistency in how the volume of oil and gas used royalty free is determined and enable the BLM to more easily verify those volumes. This requirement enhances production accountability and responds to key recommendations made by the GAO (Report 10–313). Requiring this information to be reported on the more detailed facility diagram would ultimately save time because it would eliminate the need for the BLM to obtain the information in connection with a production accountability review.

Proposed 3173.11(d) would require the operator of an existing facility (*i.e.,* one in service before the effective date of the final rule) to submit a new site facility diagram that complies with the requirements of this proposed section within 30 days of obtaining an FMP number under proposed § 3173.12 below. Under proposed § 3173.11(e), operators of existing facilities that do not require an FMP number, but for which a diagram would be required under the proposed rule (for example, facilities that dispose of produced water), would have 60 days after the effective date of the final rule to submit compliant diagrams.

Section 3173.12 Applying for a Facility Measurement Point

Section 3173.12 of the proposed rule would, for the first time, establish a formal nationwide process for designating and approving the point at which oil or gas must be measured for the purpose of determining royalty. Currently, the BLM does not have a formal, written process for designating measurement points on the leases it manages. (Some Field Offices have their own internal policies for establishing these points.) This lack of uniform guidance across Field Offices has resulted in instances of confusion about the location of royalty measurement points, which interferes with the production verification process. This proposed section would require operators to obtain BLM approval of FMPs for all measurement points used to determine royalties. The BLM would approve an FMP that meets the requirements of this proposed rule (the most important elements of which would be identification of the wells associated with the FMP, the measurement method, and component information). The BLM would assign each FMP a unique identifying number, which the operator, transporter, or purchaser would then use when reporting production results to ONRR.

The Bureau of Safety and Environmental Enforcement (BSEE) already assigns a similar FMP number for offshore oil and gas leases, which the operator, transporter, or purchaser must then use when reporting production results to ONRR. The changes in this proposed rule would make BLM practices consistent with existing BSEE and ONRR practices, for production reporting without having to create an entirely new numbering system.

Paragraph (a)(1) of this proposed section would provide that the FMP(s) for a lease, unit PA, or CA would have to be located within the boundaries of the lease, unit, or CA from which the oil or gas is produced, and must measure only production from that lease, unit PA, or CA, unless otherwise approved. Proposed paragraph (a)(2) would provide that off-lease measurement, commingling, or allocation of production requires prior approval under 43 CFR 3162.7–2 and 3162.7–3 and proposed §§ 3173.15, 3173.16, 3173.24, and 3173.25 of this proposed rule.

Proposed paragraph (b) would provide that the BLM will not approve a meter at the tailgate of a gas processing plant located off the lease, unit, or CA as an FMP. This continues existing uniform practice.

Proposed paragraph (c) would provide that the operator must apply for approval of separate FMP numbers for an FMP that measures oil produced from a particular lease, unit PA, CA, or CAA and an FMP that measures gas produced from the same lease, unit PA, CA, or CAA, even if the measurement equipment or facilities are at the same location. In the numbering system for FMPs in use by both ONRR and BSEE (for offshore leases), the first pair of numbers in the FMP number specifies whether the FMP measures oil or measures gas. The BLM would not approve the same FMP number for a facility that measures oil and a facility that measures gas.

Proposed paragraph (d) would require the operator to obtain approval for the FMP for a new measurement facility (*i.e.*, one coming into service after the effective date of the final rule) before any production leaves the facility.

Proposed paragraph (e) would provide that for existing production measurement facilities, an operator would have 9 months, 18 months or 27 months from the effective date of the final rule within which to apply for BLM approval of its FMP, depending on the production level of the lease, unit PA, CA, or CAA that the measurement facility serves. The prescribed application deadline would apply to both oil and gas measurement facilities measuring production from that lease, unit PA, CA, or CAA. The BLM proposes to require applications for FMPs for existing measurement facilities that serve operations with the highest production volumes first. For stand-alone leases, unit PAs, CAs, and CAAs that produce 6,000 Mcf or more of gas per month, or 40 barrels or more of oil per month, the BLM is proposing that the operator would have to apply for approval of the FMP(s) within 9 months after the effective date of the final rule. For stand-alone leases, unit PAs, CAs, or CAAs that produce 3,000 Mcf or more but less than 6,000 Mcf of gas per month, or 20 barrels or more but less than 40 barrels of oil per month, the operator would have to apply for approval of the FMP(s) within 18 months after the effective date of the final rule. For stand-alone leases, unit PAs, CAs, or CAAs that produce less than 3,000 Mcf of gas per month and less than 20 barrels of oil per month, the operator would have to apply for approval of the FMP(s) within 27

months after the effective date of the final rule. These thresholds would be calculated as an average over the 12 months preceding the effective date of the final rule or the period the lease, unit, CA, or CAA has been in production, whichever is shorter.

If the operator applies for an FMP approval by the required date, the operator could continue to use the existing measurement points until the BLM acts on the application. If the operator fails to apply for an FMP approval by the required date, the operator would be subject to an incident of noncompliance and assessment of civil penalty under 43 CFR subpart 3163, together with any other remedy available under applicable law or regulation.

The BLM specifically solicits comments regarding its proposed threshold volumes and required periods for submitting applications for FMP approvals. Should the BLM consider alternative application periods or volume thresholds? If so, what periods of time would be appropriate for what production volume levels and on what basis? Based on comments received and further review, the BLM may prescribe different application periods in the final rule.

Proposed paragraph (f) would prescribe the information that a request for FMP approval would have to include. Proposed paragraph (g) would allow concurrent requests for FMP approval and requests for approval of off-lease measurement or commingling. Under proposed paragraph (h), the BLM will assign a number to the FMP if it approves a request.

This proposed section would implement one of the GAO's recommendations that the Interior Department consistently track where and how oil and gas are measured, including information about meter location, identification number, and owner. Operators would be required to obtain approval from the BLM for the location of the FMP at which oil or gas is measured. The BLM would then tie the FMP numbers to other appropriate approvals, such as site facility diagrams, off- lease measurement, commingling, and royalty-free use (if volumes used royalty free are measured).

Operators, purchasers, and transporters would be required to label each FMP with the assigned number, to use the FMP number on related documents or records, and to use the number for production reporting to ONRR. Related documents or records would include, but would not be limited to, calibration reports, gas analysis, sales statements, manifests, seal records, and approvals.

The BLM estimates there are approximately 120,000 existing oil and gas facilities associated with Federal and Indian leases. Many facilities would have one FMP for oil and one FMP for gas, resulting in approximately 220,000 FMPs. We anticipate that designating FMPs for almost all operators would not require any physical changes to existing facilities other than the signage requirements discussed below. The only exception would be in some instances of commingling or off-lease measurement, which are discussed below in connection with proposed §§ 3173.14 through 3173.21 (commingling) and proposed §§ 3173.22 through 3173.28 (off-lease measurement).

In connection with its creation of a new FMP system, the BLM is proposing to revise its existing well and facility identification provisions at 43 CFR 3162.6(b) and (c) to include a signage requirement for wells on Federal and Indian lands and facilities at which Federal or Indian oil or gas is measured or processed. Additional proposed revisions to § 3162.6 would:

(1) Make the surveyed-location language in paragraphs (b) and (c) consistent, including a new reference to longitude and latitude; and (2) Remove a sentence in paragraph (b) that provided a grace period for well signs that were in existence on the effective date of the earlier rulemaking

(2) in which that section was promulgated.

Section 3173.13 Requirements for Approved Facility Measurement Points

Proposed § 3173.13 sets forth the requirements that would be applicable to all approved FMPs. Proposed paragraphs (a) and (b) would require operators to stamp or stencil FMP numbers on a fixed plate on specified measurement equipment within 30 days after BLM approval of the FMP, and maintain that stamp/stencil in a legible condition. Under proposed paragraph (c), the operator would be required to use any assigned FMP numbers in reporting and recordkeeping on the first day of the month after an FMP is assigned. Finally, proposed paragraph (d) would require an operator to file a Sundry Notice in connection with any changes or modifications to an approved FMP.

Sections 3173.14 through 3173.21 Commingling and Allocation Approvals

As explained below, §§ 3173.14 through 3173.21 of the proposed rule would restrict the instances in which the BLM would approve commingling and would establish standards that an operator would need to meet to obtain an approval. Current regulations (43 CFR 3162.7–2 and 3162.7–3) require BLM approval before commingling production from a Federal or Indian lease with production from other sources; however, there are no regulations addressing how or under what circumstance commingling should be approved. The requirements proposed in these sections are consistent with and would codify the policy outlined by the BLM in 2013 with respect to commingling approvals in IM 2013–152, ''Reviewing Requests for Surface and Downhole Commingling of Oil and Gas Produced from Federal and Indian Leases.'' The principal substantive difference between the provisions proposed below and the BLM's existing IM is that the proposed rule would establish a procedure for the BLM to review existing CAAs when the operator applies for approval of an FMP. In contrast, the IM focuses solely on new commingling arrangements.

Section 3173.14 Conditions for Commingling and Allocation Approval (Surface and Downhole)

Commingling, for the purpose of this proposed rule, is the combining of production from multiple sources (leases, unit PAs, CAs, or non-Federal or non-Indian properties) before measurement for royalty purposes. For example, an operator may have multiple leases or properties in the same vicinity with a single sales point for all the production from those leases or properties. While the volume measured at the sales point is used to determine royalty due, an allocation method is employed to determine what percentage of that volume is attributable to each lease or property. The allocation percentage is typically determined by dividing the volume or rate of production from a lease, unit PA, or CA by the total volume or rate from all sources. Allocation by volume is determined using allocation meters; allocation by rate is determined through periodic well testing.

Industry often uses the term ''commingling'' to mean any combining of production before measurement. The industry informal usage could include the combining of production from more than one well on a single lease, unit PA, or CA, and the combining of downhole production from multiple formations, even if they are within the same lease, unit PA, or CA and have the same ownership. For the purpose of this proposed rule, none of these examples would be considered commingling and

this proposed rule would not affect any of them.

The BLM generally uses the term ''downhole commingling'' to refer to combining production between intervals within a wellbore (see 43 CFR 3162.3–2). Downhole commingling requires BLM approval under that section as a subsequent well operation; however, unless the approval under § 3162.3–2 includes combining production from different leases, unit PAs, or CAs, or production from different geologic formations within the same lease, unit PA, or CA that have different ownership, an operator would not need a separate approval for downhole commingling with respect to production measurement under this proposed rule.

Operators apply for commingling approval for several reasons, including: (1) It can simplify accounting to have the sales point be the same as the point of royalty measurement; (2) Lower operating costs can be achieved by reducing the number of meters required (when using well testing as the allocation method); and (3) Lower operating costs can also be achieved by eliminating the need for separate plumbing and surface equipment (pipelines, separators, dehydrators, compressors, tanks, etc.).

Commingling can also have some advantages for the BLM: (1) More accurate measurement can sometimes be achieved from a meter measuring combined flows due to better-conditioned, more consistent, and higher flow rates than from a single low-volume meter measuring erratic flow with a high potential for multiple phases of fluid; (2) The environmental footprint can be reduced by reducing the need for duplicate surface equipment; and (3) Production accounting can be simplified by reducing the number of meters to inspect and verify.

However, these advantages may be realized without potential negative effects on royalty only if the leases, unit PAs, and CAs being commingled are all 100 percent Federal or are leased 100 percent by the same Indian tribe and are all at the same fixed royalty rate. In that situation, the allocation method is irrelevant because the total amount of Federal or Indian royalty due will be the same regardless of how it is allocated to the individual leases, unit PAs, or CAs included in the commingling approval. Consequently, the BLM can ensure accurate measurement and proper reporting by inspecting and verifying only the sales/royalty meter(s).

On the other hand, if the properties being commingled are not 100 percent Federal or leased 100 percent by the same Indian tribe, or have different royalty rates, then the method of allocation will affect the royalty due. The same is true of Indian allotted leases in virtually all circumstances. The ownership of Indian allotted leases has descended from the original allottees through several generations to numerous current owners, each owning a small percentage of the royalty interest. A situation in which two allotted leases have the same lessor ownership (*i.e.,* the royalty interests are owned by the same individual allottees in identical proportions) would be extremely rare. Consequently, the method of allocation would affect the royalty due in essentially all circumstances involving allotted leases.

Because the allocation method in these instances has royalty implications, the BLM would have to be able to ensure accurate measurement and proper reporting of all meters or facilities involved in the allocation process. This includes the sales meters and all allocation meters or facilities. Approval of commingling in these situations would greatly increase the workload for the BLM because there could be dozens of allocation meters involved, all of which would be subject to inspection and verification. In addition, the allocation methods are often complex and prone to errors and adjustments which increase the risk of mis-measurement and mis-reporting if commingling were to be permitted.

Commingling production from Federal or Indian leases with production from State or private properties that are not part of a unit or CA introduces additional complexities. Unlike a unit or CA, where the BLM has explicit authority over measurement points on non-Federal or non-Indian properties included in the agreement, the BLM has no authority over measurement points on non-Federal or non-Indian lands whose production would be commingled with production from Federal or Indian leases where no unit or CA exists. Therefore, it would be impossible, as a practical matter, for the BLM to verify that the allocation percentages are correct, regardless of how they were determined.

Not only does commingling in situations where there are potential impacts to royalty make verification more difficult, it also increases the uncertainty of volume and quality measurements of oil and gas removed or sold from the lease, unit PA, or CA. When royalty is based on allocated volumes (whether determined by allocation meter or well testing), it is virtually impossible to achieve or verify the required uncertainty level for the allocated volumes. For example, when allocation is done by well testing,[6] the royalty-bearing volume of oil and gas is calculated by multiplying the oil and gas measured at the central point of royalty measurement by the allocation percentage obtained through well testing. The uncertainty of the measurement of the allocated volume is the combined uncertainty of the volume measurement at the central point of royalty measurement and the uncertainty inherent in the allocation percentage. The BLM currently has no standards for well testing and, even if it did, the fact that the production remains unmeasured for 29 out of 30 days (in the case of monthly well testing) results in an indeterminate level of uncertainty. For allocation by allocation meter, the uncertainty of the allocation percentage is the cumulative uncertainty of every allocation meter and the central point of royalty measurement.

Based on these considerations, and to ensure that the BLM can verify the measurements on which royalty is based, paragraph (a) of proposed § 3173.14 would generally prohibit the commingling of production from Federal or Indian leases, unit PAs, or CAs, unless all the properties proposed for commingling were 100 percent Federal or leased 100 percent by the same Indian tribe, and at the same fixed royalty rate.

Proposed paragraph (b) sets forth the proposed rule's only two exceptions that would allow commingling outside these circumstances (in other words, where commingling would be allowed if, for example, there is a combination of Federal and non-Federal ownership, or Indian allotted leases are involved, etc.). First, under proposed paragraph (b)(1), the BLM would consider approving commingling for certain low-volume properties. These would be leases, unit PAs, or CAs that do not produce sufficient volumes for the operator to realize, from continued production, a sufficient rate of return on the investment required to achieve non-commingled measurement of volumes produced from the lease, unit PA, or CA, such that a prudent operator would opt to plug a well or shut-in the lease, unit PA, or CA if the commingling request were not approved. In the absence of information demonstrating a different rate, a rate of return less than 10 percent (calculated before Federal,

[6] Well testing involves periodic testing of the production rate for a well, lease, unit, or CA—for example, for 1 or 2 days of each production month. Commingled volumes are then allocated back to the contributing properties according to the relative production rates measured for each of the contributing properties.

State, and local taxes) will be regarded as not sufficient to achieve non-commingled measurement. The BLM may accept a different rate of return if the operator provides sufficient justification. The BLM is seeking comments on the suitability of this rate of return for defining a low-volume property. The BLM would also define a low-volume property as a lease, unit PA, or CA where the cost required to achieve non-commingled production would exceed the net present value of the royalty projected from the lease, unit PA, or CA proposed for commingling over the equipment life.

Second, under proposed § 3173.14(b)(2), the BLM is also proposing to consider approving commingling where overriding considerations indicate that the BLM should approve a commingling application notwithstanding potential negative royalty impacts from commingled measurement. Such situations could include topographic or other environmental considerations that make non-commingled measurement physically impractical or undesirable, in view of where additional measurement and related equipment necessary to achieve non-commingled measurement would have to be located. Proposed paragraph (b)(3) would require the AO to determine whether approving the commingling would be in the public interest, taking into account relevant environmental considerations and production verifiability and accountability.

In connection with these proposed changes, the BLM is proposing to revise 43 CFR 3162.3–2 to differentiate between the combining of production between intervals within a wellbore on the same lease, unit PA, or CA (downhole commingling)—which does not affect production accountability—and the combining of production from different leases, unit PAs or CAs—which does. Proposed revisions to 43 CFR 3162.3–2(a) would make it clear that operators who wish to combine production between intervals within a wellbore on the same lease, unit PA, or CA could continue to seek approval for this activity under that section, and would not need a separate approval under this proposed rule.

Section 3173.15 Applying for a Commingling and Allocation Approval

Section 3173.15 of the proposed rule would establish the requirements operators must follow when requesting a CAA and the information they would need to include.

Section 3173.16 Existing Commingling and Allocation Approvals

Under proposed § 3173.16, the BLM would be required to review an existing CAA upon receipt of an operator's request for assignment of an FMP number to a facility associated with the CAA. Proposed paragraph (a) would require the BLM to review the existing CAA for consistency with the minimum standards and requirements under proposed § 3173.14. The AO would notify the operator in writing of any inconsistencies or deficiencies.

Under proposed paragraph (b), the operator would have 20 business days to correct any inconsistencies or deficiencies. Under proposed paragraph (c), the BLM could impose new or amended conditions of approval (COAs) on an existing CAA to make it compliant with the requirements of this proposed rule. If the operator fails to correct the deficiencies identified by the BLM, proposed paragraph (d) would allow the AO to terminate the CAA. Under proposed paragraph (e), if the BLM approved a new CAA to replace an existing agreement, it would be effective on the first day of the month following its approval.

The BLM estimates that there are currently approximately 2,600 surface commingling approvals nationally, approximately 300 of which involve commingling production from Federal or Indian leases with production from State or private properties. It is also estimated that there are another approximately 8,000 downhole commingling approvals, 400 of which involve commingling production from Federal or Indian leases with production from State or private properties.

The BLM is proposing a review of existing commingling approvals for two reasons. First, many existing commingling approvals are old and are not well documented. Operators are sometimes unaware of existing commingling approvals or the provisions in the approvals. Second, many approvals have involved allocation methods that are difficult or impossible to inspect and verify for a variety of reasons, including a lack of a well-defined allocation method, overly-complex or unverifiable allocation methods, and the inclusion of properties with allocation meters over which the BLM has no jurisdiction.

The following are some common existing commingling situations that would likely not be approved under this proposed rule unless an operator could show that it meets one of the exceptions identified above. In addition to describing these situations, the discussion below also identifies alternative arrangements that would help minimize surface impacts:

Example 1: Commingling production from Federal or Indian leases with production from State or private properties, using allocation meters on each property.

Under the proposed rule, commingling in this situation would not be approved due to the mixed ownership. However, because existing allocation meters on Federal leases or federally approved units or CAs are already subject to the applicable BLM oil and gas measurement requirements, those meters generally could be used as FMPs to determine royalty value directly instead of being used to determine allocation percentages. As a result, there would be little or no additional surface impacts or significant economic impacts from disallowing such commingling, as the measurement for purposes of royalty would simply occur at the meters that previously had served as allocation meters.

Example 2: Commingling production from Federal or Indian leases with production from State or private properties, using well testing as the allocation method.

Under the proposed rule, commingling in this situation again would not be approved due to mixed ownership. The operator would be required to install FMPs to measure the oil and gas sold or removed from each lease, unit PA, or CA. (If there is more than one Federal lease with the same fixed royalty rate or more than one Indian tribal lease 100 percent owned by the same tribe at the same fixed royalty rate, the BLM could approve commingling production from the Federal leases only or from the Indian leases only, but not from both Federal leases and Indian leases.) Installing additional FMPs could require some additional surface disturbance for measurement and treatment equipment. However, well testing typically requires both a test separator and equipment to measure the oil and gas produced during the well test. While permanent separation and measurement equipment for an FMP may require more surface area than the test equipment, the effect on surface area disturbance should be minimal.

Example 3: A liquids-gathering system collects commingled production from properties including both Federal or Indian leases and State or private lands, and pipes it to a central off-lease facility for processing and measurement.

This situation often arises as a result of environmental mitigation measures designed to reduce surface impacts,

especially those resulting from tanker-truck traffic transporting oil from tanks located on the lease, unit PA, or CA. Under the proposed rule, commingling in this situation again would not be approved due to mixed ownership. Instead, there would be at least two alternatives that would ensure that the BLM could verify production and at the same time minimize surface impacts:

First, under the proposed rule, a CAA could be obtained for those Federal or Indian leases, unit PAs, and CAs meeting the requirements of § 3173.14 of this proposed rule. Separate lines would be needed to keep Federal or Indian production segregated from State or private production until it was measured at a central processing facility. An off-lease measurement approval under §§ 3173.22 through 3173.24 of this proposed rule would also be required. Some additional surface disturbance would be necessary for the additional pipeline and duplicate separation and measurement equipment at the central location. However, this alternative would eliminate the need for tanks (and the resulting truck traffic), separators, and measurement equipment on-site. If a CAA were not practical, then separate pipelines would be needed for each Federal or Indian lease, unit PA, or CA.

Second, a CAA could be obtained for those Federal or Indian leases, unit PAs, and CAs meeting the requirements of §§ 3173.22 through 3173.24 of this proposed rule. The Federal or Indian oil and gas could be separated and measured on one of the Federal or Indian leases, units PAs, or CAs and then either removed by separate pipelines, or recombined into a single stream and removed in a single pipeline. This would require at least two sets of separators and measurement equipment on the producing properties—one set for the Federal or Indian production, and one set for the State and private production. As with the previous option, however, there would be no tanks on the properties, thereby eliminating truck traffic. This scenario would require that the oil be measured at the outlet of a separator with no associated tank. While this adds some complexity, it has proven to be feasible using technology such as Coriolis meters. If a CAA were not practical, then individual separation and measurement equipment would be needed for each Federal or Indian lease, unit PA, or CA.

Section 3173.17 Relationship of a Comingling and Allocation Approval to Royalty-Free Use of Production

Section 3173.17 of the proposed rule would clarify that approval of a CAA does not constitute approval of off-lease royalty-free use of production as fuel in facilities located at an FMP approved under the CAA. Under the currently applicable rule (see Notice to Lessees and Operators of Onshore Federal and Indian Oil and Gas Leases No. 4A (NTL–4A), 44 FR 76600 (Dec. 27, 1979), which implements judicial decisions construing relevant statutory provisions and lease terms), the lessee or operator may claim royalty-free use only for gas or oil used on the same lease, on the unit for the same unit PA, or on the same CA from which the gas or oil was produced. Thus, if an FMP approved under a CAA is located on one of the leases or CAs or units whose production flows to the FMP, the lessee or operator generally may claim royalty-free use only for that portion of the gas or oil used as fuel in facilities at the FMP that corresponds to the portion of the total production flowing to the FMP that is allocable to that lease, CA, or unit, unless the BLM approves ''off-lease'' royalty-free use of production from other Federal leases, CAs, or units whose production flows to the FMP (see discussion below). Similarly, if the FMP is not on any of the leases or CAs or units whose production flows to the FMP, the lessee or operator may not claim royalty-free use for any of the production used as fuel, absent BLM approval. The lessee or operator could seek such approval for ''off-lease'' royalty-free use by separate application, as discussed further below.

Section 3173.18 Modification of a Commingling and Allocation Approval

Section 3173.18(a) of the proposed rule identifies the circumstances under which all operators who are parties to a CAA may request a modification, including: Changes to the allocation schedule; inclusion of additional leases, unit PAs, or CAs; termination of a lease, unit, or PA within the CAA; or a change in operator. Proposed § 3173.18(b) would identify the information that must be submitted in connection with a modification request.

Section 3173.19 Effective Date of a Commingling and Allocation Approval

Section 3173.19(a) and (b) of the proposed rule would identify the effective date of a CAA after the approval of an application or modification, respectively. Proposed § 3173.19(c) would clarify that a CAA does not modify any of the terms of any leases, unit PAs, or CAs

Section 3173.20 Terminating a Commingling and Allocation Approval

Section 3173.20(a) of the proposed rule would provide that any operator who is a party to a CAA may unilaterally terminate it by submitting a Sundry Notice to the BLM. The operator would be required to identify new FMPs for its lease(s), unit PA(s), or CA(s) in the Sundry Notice.

Proposed paragraph (b) would authorize the BLM to terminate an approved CAA for any reason. By way of illustration, the proposed rule identifies certain circumstances in which the BLM might exercise that authority, such as when there have been changes in technology, regulation, or policy, or the operator has not complied with the terms of the CAA. Proposed paragraph (c) would provide for automatic termination of a CAA if only one lease, unit PA, or CA remains in the CAA.

After termination, proposed paragraph (d) would require the BLM to notify in writing all operators who are party to the CAA of the effective date of the termination and the reasons for it. Under proposed paragraph (e), upon termination, each lease, unit PA, or CA, would revert to separate on-lease measurement, unless off-lease measurement is approved under §§ 3173.22 through 3173.28 of this proposed rule.

Section 3173.21 Combining Production Downhole in Certain Circumstances

Section 3173.21 of the proposed rule would identify certain circumstances in which downhole comingling would be subject to the requirements of this proposed rule. Under proposed paragraph (a)(1), the combination of production from a single well drilled into different hydrocarbon pools or geologic formations under separate adjacent properties, regardless of ownership, where none of the pools or formations are common to more than one of the properties, would constitute commingling under the proposed rule. If, on the other hand, the pools or geologic formations are common to more than one property, then under proposed paragraph (a)(2), the operator would be required to establish a unit PA or communitization agreement as opposed to obtaining a CAA. Proposed paragraph (b) would clarify that combining production downhole from different geologic formations on the same lease from a single well, while requiring AO approval, is not

considered commingling for purposes of this proposed rule, unless those formations have different ownership.

Sections 3173.22 through 3173.28 Off-Lease Measurement Approvals

Sections 3173.22 through 3173.28 of the proposed rule would establish the circumstances in which the BLM would approve measurement of production off the lease, unit, or CA (referred to as ''off-lease measurement''). Under the BLM's existing regulations (43 CFR 3162.7–2 (oil) and 43 CFR 3162.7–3 (gas)), all measurement must be on-lease, unit, or CA, unless otherwise authorized by the BLM. However, there are currently no national standards that operators must meet when applying for off-lease measurement. Neither Order 3 nor other regulations address how or under what circumstances the BLM will approve off-lease measurement. The proposed provisions below would provide such standards.

Section 3713.22 Requirements for Off-Lease Measurement

Off-lease measurement has led to much confusion over the location of measurement points. Many existing meters measure commingled Federal, private, and State production, which the operators allocate back to the individual lease, unit PA, CA, or CAA located upstream. These off-lease central-delivery-point allocation systems have led to significant discrepancies between operator-allocated volumes, which operators report to ONRR, and the volumes that the BLM calculates during follow-up audits. In the absence of a national standard for off-lease measurement, BLM State Offices have created their own standards, which are not consistent.

Section 3173.22 of this proposed rule would establish conditions under which off-lease measurement would be approved. Under this proposed section, the BLM would allow off-lease measurement of production only from a single Federal or Indian lease, unit PA, CA, or CAA, and only at an approved FMP. This proposal could restrict the types of situations in which off-lease measurement could occur, and therefore could result in the construction of facilities (*i.e.,* meters) that previously would not have been required under existing practice. Although the BLM generally prefers to limit the number of facilities and surface disturbances that occur on Federal leases, the BLM believes that limiting the use of off-lease measurement would provide for more accurate accounting of oil and gas production as required by Section 101(a) of FOGRMA, 30 U.S.C. 1711(a).

Section 3173.23 Applying for Off-Lease Measurement

Section 3173.23 of the proposed rule would establish the requirements operators must follow when applying for an off-lease measurement approval or amending an existing approval, including required supporting information and related documentation.

Section 3173.24 Effective Date of an Off-Lease Measurement Approval

Proposed § 3173.24 would provide that off-lease measurement approvals are effective immediately, unless the BLM specifies a different effective date in the approval.

Section 3173.25 Existing Off-Lease Measurement Approval

Under this proposed section, an existing off-lease measurement approval would be reviewed upon receipt of an operator's request for the assignment of an FMP number to a facility associated with the off-lease measurement approval. Proposed § 3173.25(a) would require the BLM to review the existing off-lease measurement approval for consistency with the minimum standards and requirements in proposed § 3173.22. The AO would notify the operator in writing of any inconsistencies or deficiencies. Under proposed paragraph (b), the operator would have to correct the inconsistencies or deficiencies within 20 business days. Under proposed paragraph (c), in connection with approving the requested FMP, the BLM could impose new or amended COAs on an existing off-lease measurement approval to make it consistent with the requirements of this proposed rule. If the operator fails to correct the deficiencies, proposed paragraph (d) would allow the AO to terminate the off-lease measurement approval. Under proposed paragraph (e), if the BLM approves a new off-lease measurement arrangement, that new arrangement would be effective on the first day of the month following its approval.

The BLM estimates that for FY 2014, there were approximately 25,404 producing onshore Federal and Indian leases, unit PAs, and CAs. Of those, approximately 1,500 have off-lease measurement approvals where there is no commingling (in situations, for example, where the well is located in difficult-to-access or environmentally sensitive area). The BLM anticipates that a few of these off-lease measurement points may not meet the minimum standards of this rule and would not be re-approved. If any existing off-lease measurement point is not re-approved under the proposed rule, the lessee or operator would be required to move the measurement facilities back on-lease or install new measurement facilities on-lease.

Section 3173.26 Relationship of Off-Lease Measurement Approval to Royalty-Free Use of Production

Section 3173.26 of the proposed rule would clarify that approval of off-lease measurement does not constitute approval of off-lease royalty-free use of production as fuel in facilities located at an approved off-lease FMP. Under NTL–4A, as noted above, the lessee or operator may claim royalty-free use only for gas or oil used on the same lease, on the unit for the same unit PA, or on the same CA from which the gas or oil was produced. Thus, the lessee or operator may not claim royalty-free use for any of the production used as fuel at an off-lease FMP, absent BLM approval. The lessee or operator could seek such approval by separate application.

Section 3173.27 Termination of Off-Lease Measurement Approval

Section 3173.27(a) of the proposed rule would provide that an operator may terminate an off-lease measurement arrangement through the submittal of a Sundry Notice to the BLM, which would have to identify the new FMPs for the lease(s), unit(s), or CA(s) that had been subject to the off-lease measurement approval. Proposed paragraph (b) of this section would authorize the BLM to terminate an approved off-lease measurement arrangement for any reason. By way of illustration, this proposed paragraph would identify certain circumstances under which the BLM might exercise that authority. Proposed paragraph (c) would provide that the BLM would notify the operator in writing of the termination of the off-lease measurement approval, the reasons for termination, and the effective date of the termination. Under proposed paragraph (d), after termination, each lease, unit, or CA that was subject to the off-lease measurement approval would revert to on-lease measurement.

Section 3173.28 Instances Not Constituting Off-Lease Measurement, for which No Approval Is Required

Section 3173.28 of the proposed rule would identify two circumstances that would not be considered off-lease measurement for purposes of the proposed rule. The first is where an FMP is located on a well pad of a directionally-drilled well that produces oil or gas from a lease, unit, or CA on which the well pad is not located. The

second is where a lease, unit, or CA is made up of separate non-contiguous tracts. If production is moved from one tract to another tract within the same lease, unit, or CA, and the production is not diverted during movement between the tracts before the FMP (except for production used royalty-free), measurement would not be considered to be off-lease measurement.

Section 3173.29 Immediate Assessments for Certain Violations

Proposed § 3173.29 would expand the number and types of violations that would be subject to immediate assessments. Currently, BLM regulations at 43 CFR 3163.1(b) identify three violations that warrant immediate assessments. Section IV. of Order 3 identifies one further violation that results in an immediate assessment. The existing immediate assessments are not civil penalties and are separate from the civil penalties authorized under Section 109 of FOGRMA, 30 U.S.C. 1719.

The authority for the BLM to impose these assessments was explained in the preamble to the final rule in which 43 CFR 3163.1 was originally promulgated in 1987:

> The provisions providing assessments have been promulgated under the Secretary of the Interior's general authority, which is set out in Section 32 of the Mineral Leasing Act of 1920, as amended and supplemented (30 U.S.C. 189), and under the various other mineral leasing laws. Specific authority for the assessments is found in Section 31(a) of the Mineral Leasing Act (30 U.S.C. 188(a)), which states, in part ''. . . the lease may provide for resort to [sic] appropriate methods for the settlement of disputes or for remedies for breach of specified conditions thereof.'' All Federal onshore and Indian oil and gas lessees must, by the specific terms of their leases which incorporate the regulations by reference, comply with all applicable laws and regulations. Failure of the lessee to comply with the law and applicable regulations is a breach of the lease, and such failure may also be a breach of other specific lease terms and conditions. Under Section 31(a) of the Act and the terms of its leases, the BLM may go to court to seek cancellation of the lease in these circumstances. However, since at least 1942, the BLM (and formerly the Conservation Division, U.S. Geological Survey), has recognized that lease cancellation is too drastic a remedy, except in extreme cases. Therefore, a system of liquidated damages was established to set lesser remedies in lieu of lease cancellation.
>
> The BLM recognizes that liquidated damages cannot be punitive, but are a reasonable effort to compensate as fully as possible the offended party, in this case the lessor, for the damage resulting from a breach where a precise financial loss would be difficult to establish. This situation occurs when a lessee fails to comply with the operating and reporting requirements. The rules, therefore, establish uniform estimates for the damages sustained, depending on the nature of the breach.

53 FR 5384, 5387 (Feb. 20, 1987). The immediate assessments reflect a recognition that the BLM continues to incur costs associated with correcting violations of lease terms and regulations.

The additional assessments in this proposed rule address violations that pose particular threats to the integrity of the BLM's production accounting system. These are violations that significantly increase the BLM's workload and enforcement costs. Accordingly, the BLM proposes to make the 10 violations listed in proposed § 3173.29 subject to immediate assessments.

Three immediate assessments would apply to purchasers and transporters as well as operators. This extension is being proposed because they pertain to operational functions on the lease site that a purchaser or transporter may, in some circumstances, perform instead of the operator—*e.g.,* removing a Federal seal without authorization (proposed § 3173.4) or failure to report theft or mishandling of production (proposed § 3173.8). Extending responsibility to purchasers and transporters with respect to functions they perform also implements the site security provisions of Section 102(b) of FOGRMA, 30 U.S.C. 1712(b), which require operators to develop and comply with site security plans, or minimum site security measures that the Secretary deems appropriate, that are designed to protect the oil or gas produced or stored on an onshore lease site from theft. Thus, the authority for these requirements is found in both the general rulemaking authority of the various mineral leasing statutes (including the MLA at 30 U.S.C. 189 and the Mineral Leasing Act for Acquired Lands at 30 U.S.C. 359) and the rulemaking authority in Section 301(a) of FOGRMA, 30 U.S.C. 1751(a).

The recordkeeping requirements imposed on purchasers and transporters in § 3170.7 of the proposed rule discussed above are imposed under Section 103(a) of FOGRMA, 30 U.S.C. 1713(a). Similar to the authority granted in the MLA at 30 U.S.C. 189, the general rulemaking authority of FOGRMA Section 301(a) provides authority for the BLM to impose immediate assessments on purchasers and transporters who fail to follow the proposed new requirements for recordkeeping and records maintenance.

All of the immediate assessments under this proposed rule would be set at $1,000 per violation. The BLM chose the $1,000 figure because it generally approximates what it would cost the agency on average to identify and document a violation and verify remedial action and compliance.

Enforcement Actions

This proposal would remove the enforcement, corrective action, and abatement period provisions of Order 3. In their place, the BLM would develop an internal inspection and enforcement handbook that would provide direction to BLM inspectors on how to classify a violation—as either major or minor—what the corrective action should be, and what the timeframes for correction should be. The proposed rule would take the approach that the violation's severity and corrective action timeframes should be decided on a case-by-case basis, determined based on the definitions in the regulations. In deciding how severe a violation is, BLM inspectors must take into account whether a violation could result in ''immediate, substantial, and adverse impacts on public health and safety, the environment, production accountability, or royalty income.'' (Definition of ''major violation,'' 43 CFR 3160.0–5.) The AO would use the enforcement handbook in conjunction with 43 CFR subpart 3163, which provides for assessments and civil penalties when lessees and operators fail to remedy their violations in a timely fashion, and for immediate assessments for certain violations.

Elimination of Self Inspections

The BLM is proposing to eliminate the self-inspection provision of Order 3, section III.F., because it has been impractical for the BLM to enforce. Order 3 requires a lessee or operator to establish an inspection program for the purpose of periodically measuring production volumes and assuring that there is compliance with the BLM's minimum site security requirements. However, Order 3's language is vague and the BLM has never supplemented it with internal guidance or enforcement policy. As a result, the BLM determined this requirement was of limited utility. In lieu of reworking or updating this requirement, this proposed rule would strengthen recordkeeping requirements for operators, transporters, and purchasers, which the BLM believes will ultimately accomplish the same results and be of more use going forward.

Miscellaneous changes to other BLM regulations in 43 CFR part 3160

As noted at the beginning of this section-by-section analysis, the BLM is proposing other changes to provisions in 43 CFR part 3160. Some of those have already been discussed above in connection with provisions of this proposed rule to which they relate. The remaining proposed revisions are those noted here.

1. The authority citation for part 3160 would be corrected to include 25 U.S.C. 396, the grant of rulemaking authority to the Secretary for allotted Indian leases, which does not appear in the current print edition of the CFR.

2. Section 3160.0–3, Authority, would be updated to include the amendments to the Federal Oil and Gas Royalty Management Act of 1982 enacted by the Federal Oil and Gas Royalty Simplification Act of 1996.

3. Section 3161.1, Jurisdiction, would be updated to include references to FMPs, the Indian Mineral Development Act, and Tribal Energy Resource Agreements. The revisions would also mirror the new language in proposed § 3170.2.

4. Section 3162.3–2 would be revised by adding a new paragraph (d), which would refer operators to proposed provisions in subpart 3173 for details on how to apply for approval of FMPs, surface or subsurface commingling from different leases, unit PAs and CAs, or off-lease measurement.

5. Section 3162.4–3, the provisions regarding the no-longer-used Form 3160–6 (the monthly report of operations) would be removed.

6. Section 3162.6, Well and facility identification, would be revised to correct the misspelled word ''indentification'' in paragraph (a) to read ''identification.'' Paragraph (b) would be revised to remove a provision allowing abbreviated sign designations and a ''grandfathering'' provision for old well signs. Paragraph (c) would be revised to extend signage requirements to include facilities at which oil or gas produced from Federal or Indian leases is stored or processed. The fifth sentence of the current paragraph (c) would become the new paragraph (d), with its wording revised. The current paragraph (d) would become paragraph (e).

7. Section 3162.7–5, Site security on Federal and Indian (except Osage) oil and gas leases, would be removed. The provisions in the proposed rule that correspond to, or cover the same subject matter as, the several paragraphs in § 3162.7–5 are shown in the following table:

BILLING CODE 4310–84–C

43 CFR 3162.7-5 paragraph	Proposed new provision
(a) Definitions	43 CFR 3173.1
(b)(1) Lines and valves; effective sealing	43 CFR 3173.2(a), 3173.9(b) and 3173.11(c)(7)
(b)(2) LACT meters and effective sealing of components	43 CFR 3170.4, 3173.3, and two sections in anticipated new subpart 3174
(b)(3) By-passes around meters	43 CFR 3170.4
(b)(4) Sealing of appropriate valves during oil measurement by hand gauging	43 CFR 3173.2(a) and (b)
(b)(5) Circulating lines with valves allowing access to remove oil from storage tanks	43 CFR 3173.1
(b)(6) Records retention requirements	43 CFR 3170.7
(b)(7) Removal of oil for transportation by vehicle and required documentation	43 CFR 3173.5
(b)(8) Reporting theft or mishandling of oil	43 CFR 3173.8
(b)(9) Variances	43 CFR 3170.6
(c) Site security plans	None (site security plans eliminated)
(d) Site facility diagrams	43 CFR 3173.11

BILLING CODE 4310–84–P

8. Section 3163.2, Civil penalties, would be rewritten to address purchasers and transporters who are not operating rights owners. Paragraph (k) would be amended to change ''shall'' to ''will'' and to remove the references to ''other liquid hydrocarbons,'' because other liquid hydrocarbons would be encompassed within the definition of the term ''oil'' in proposed § 3170.3.

9. Section 3164.1, Onshore Oil and Gas Orders, would be revised to remove the reference to Order No. 3, Site Security, from the table in paragraph (b) because the Order would be replaced by this codified proposed rule.

Onshore Order Public Meetings, April 23–24, 2013

On April 24 and 25, 2013, the BLM held a series of public meetings to discuss proposed revisions to Orders 3, 4, and 5. The meetings were webcast so tribal members, industry, and the public across the country could participate and ask questions either in person or over the internet. Following the forum, the BLM opened a 36-day informal comment period, during which 13 comment letters were submitted. The following summarizes comments the BLM received relating to Order 3 and our response:

1. *The BLM should use the API number or the LR (Legacy Rehost) 2000 system serial number rather than create a new FMP numbering system.*

The BLM disagrees with this comment and believes that this suggestion would be unworkable. The BLM and State regulators use API numbers to identify individual wells while at the same time the BLM uses LR 2000 system serial numbers to identify leases. The BLM's proposed FMP numbering system would be used to identify facilities (meters) that serve any number of wells and leases, and whose measurements affect the calculation of the volume or quality of production on which royalty is owed. The FMP numbers would be based on an FMP numbering system that the former Minerals Management Service developed for offshore production reporting. ONRR continues to use that system. The FMP numbering system used by ONRR will generate numbers that indicate whether a lease is onshore or offshore, the mineral produced (oil or gas), whether the measurement is commingled or off-lease, and other relevant information. The BLM believes that using the same FMP numbering system for production reporting for onshore leases likely will save time and

money by developing a system compatible with that already in use by ONRR.

2. *Clarify the level of detail on site facility diagrams involving royalty-free use.*

The BLM agrees with this comment. In light of this suggestion, the BLM is proposing that the operator identify each piece of equipment powered by production from the lease, unit, or CA. If the operator claims royalty-free volumes, the diagram (or an attachment) would have to state the estimated volume the equipment consumes per day and per month, how the volume is determined, the equipment manufacturer's name, rated use, and equipment serial number. (Alternatively, the royalty-free volume used by the equipment could be measured.) The proposed rule includes a number of general sample site facility diagrams.

3. *Reduce the level of detail required on site facility diagrams for equipment used to determine quality and quantity of production.*

The BLM agrees with this comment. The proposed rule would require the operator to submit the relevant information regarding meters and other measurement equipment when it requests an FMP designation or amends an existing FMP. Thus, requiring this information on the site facility diagrams is unnecessary.

4. *''Grandfather'' existing approvals for off-lease measurement and commingling, and ''grandfather'' existing site facility diagrams.*

The BLM believes that a ''grandfathering'' approach is not workable. ''Grandfathering'' would result in a patchwork of multiple and incompatible requirements. The BLM would have to track which approvals were grandfathered. The BLM is proposing to update commingling approval requirements because existing requirements have proven problematic in ensuring and verifying accurate measurement. If existing approvals were ''grandfathered,'' updated requirements would come into effect only incrementally and over many years as new facilities came on line and older facilities were modified.

5. *''Grandfather'' existing equipment and Order 3 requirements.*

The BLM disagrees with this comment. Grandfathering is generally unworkable for two reasons. First, grandfathering results in two tiers of equipment—older equipment that must meet the standards of a rule that is no longer in effect and newer equipment that has to meet the standards of the new rule. This not only requires the BLM to maintain, inspect against, and enforce two sets of regulations (one of which no longer applies to equipment coming into service), but also to track which FMPs have been grandfathered and which are subject to the new regulations. Second, the purpose for promulgating new regulations is to ensure accurate and verifiable measurement of oil and gas removed or sold from Federal and Indian leases. In lieu of grandfathering, the BLM has proposed grace periods for bringing existing facilities into compliance with the proposed standards (see §§ 3173.12, 3173.16, and 3173.25). These grace periods would be tied to volumes measured by the soon-to-be-designated FMPs, giving lower-volume operations more time to apply for their FMPs.

6. *Determine if commingling is economically justified by using net present value of investment cost of non-commingled measurement in lieu of a rate-of-return method (used in this proposed rule), and that if the net present value of the investment cost was less than 1.5 times the investment, then commingling should be approved.*

The BLM requested clarification of this comment to analyze the potential impacts of the proposed method. However, the BLM received no response to its inquiry. Consequently, the BLM does not believe it has an adequate basis on which to propose such a method. In connection with this proposed rule, the BLM would be interested in any information regarding alternate methods for determining if commingling is economically justified.

7. *The economic analysis of a request for commingling approval should consider all costs of lease development and not just the costs associated with achieving non-commingled measurement.*

The BLM disagrees with this comment. The BLM believes this would be unworkable, time-consuming, and expensive, as well as inaccurate with respect to the issue addressed. The BLM would not have access to all of the drilling and development costs, the calculations would be inordinately complex, and those costs in any event are not determinative of whether commingled measurement is economically justified. Whether commingled measurement is economically justified is a function of the marginal cost difference between commingled measurement and non-commingled measurement.

8. *The BLM should not take enforcement actions against purchasers and transporters for not maintaining and submitting records.*

The BLM disagrees with this comment. The requirement for purchasers and transporters to maintain records is imposed by FOGRMA. This proposed rule would affect approximately 200–300 purchasers and transporters, but as explained earlier, the BLM believes it is necessary to support the BLM's production verification and accountability efforts.

9. *Immediate assessments are arbitrary, ambiguous, and unnecessary.*

The BLM disagrees with this comment. The specific immediate assessments proposed and the reasons for proposing them are discussed earlier.

10. *The BLM Enforcement Manual should be made public.*

The BLM agrees with this comment. The Enforcement Manual will be posted on the BLM Web site at approximately the same time as the effective date of the final rule.

IV. Procedural Matters

Executive Orders 12866 and 13563, Regulatory Planning and Review

Executive Order 12866 provides that the Office of Information and Regulatory Affairs (OIRA) will review all significant rules. OIRA has determined that this rule is not significant.

Executive Order 13563 reaffirms the principles of E.O. 12866 while calling for improvements in the nation's regulatory system to promote predictability, to reduce uncertainty, and to use the best, most innovative, and least burdensome tools for achieving regulatory ends. The executive order directs agencies to consider regulatory approaches that reduce burdens and maintain flexibility and freedom of choice for the public where these approaches are relevant, feasible, and consistent with regulatory objectives. E.O. 13563 emphasizes further that regulations must be based on the best available science and that the rulemaking process must allow for public participation and an open exchange of ideas. We have developed this proposed rule in a manner consistent with these requirements.

1. The proposed rule would not have an annual effect on the economy of $100 million or more or adversely affect in a material way the economy, a sector of the economy, productivity, competition, jobs, the environment, public health or safety, or State, local, or tribal governments or communities.

The requirement for more detailed site facility diagrams is the most significant proposed provision that could increase the cost associated with the development of Federal and Indian

oil and gas leases. The BLM already requires Federal and Indian oil and gas producers to provide generalized diagrams that show each piece of equipment that is used at a facility, including connections between each piece of equipment, and valve positions on production storage tanks. Under this proposed rule, operators would be required to submit new diagrams that also show additional information. Companies may incur additional costs associated with verifying and submitting this information and new diagrams.

The BLM estimates that 3,700 operators would submit approximately 125,000 new diagrams when the requirement is first implemented and that it would take the BLM approximately 3 years to process the submissions. The total one-time cost to the regulated community would be approximately $63.3 million, spread over 3 years. An operator would be required to submit the new diagrams for a facility that is in service before the final rule's effective date within 30 days after the BLM assigns the FMP number(s) to that facility. An operator would be required to submit the new diagrams for a new facility (*i.e.,* one not yet in service on the effective date of the final rule) within 30 days after construction of the facility. On an ongoing basis, the BLM estimates operators would submit about 5,000 new diagrams per year for a total annual cost to the regulated community of $2.5 million. Once incorporated into the submission and review process, this requirement should not significantly change costs for the BLM, lessees, operators, purchasers, or transporters.

Another proposed administrative change in this rule would require operators, within 27 months after the effective date of the final rule, to obtain BLM-issued FMP numbers, which would be used for labeling facilities and for reporting. Currently, companies have their own individualized internal systems for identifying facilities where production is measured for determining royalty. The BLM anticipates that 3,700 operators would submit 220,000 initial applications for the new FMP numbers, which operators would then stamp or stencil on a fixed plate. It would take the BLM approximately 3 years to process the FMP applications. The BLM estimates there would be a total one-time cost to the regulated community of approximately $55.7 million to convert to the new numbering system, which would be spread over 3 years. On an ongoing basis, the BLM anticipates operators would submit approximately 4,000 new and amended FMP applications each year, for an approximate cost to the regulated community of $1 million per year.

This proposed rule would establish new requirements associated with lessees and operators commingling production from different leases, CAs, or PAs, and in some instances existing commingling approvals would be modified. Of the approximately 10,541 existing commingling approvals, the BLM anticipates that only 710 of them would not meet the new requirements because they include private and State leases whose production is commingled with production from Federal or Indian oil and gas leases. Under the proposed rule, the BLM would modify or terminate these unless the operator could demonstrate that the cost of achieving non-commingled measurement would not be economically recoverable based on the low volume of oil and gas produced or could show other extenuating circumstances.

The BLM estimates that 50 percent, or 355, of the existing approvals that do not meet the proposed new requirements would remain in place due to their low production volumes and the other 50 percent would be terminated or modified. Measuring equipment, most likely allocation meters, serving the terminated arrangements would have to be converted into FMPs and updated to meet the new oil and gas measurement standards that the BLM anticipates proposing as separate rules that would be codified at new 43 CFR subparts 3174 and 3175. The costs for upgrading measuring equipment would be most appropriately discussed in the preambles and economic analyses supporting those proposed rules. Operators could incur some administrative costs associated with converting allocation meters into FMPs if they wish to continue to use these facilities for their own internal allocation purposes. For new and modified commingling agreements, we anticipate the proposed revision would increase industry costs by about $5.1 million per year.

Proposed new records management requirements could, depending on individual business practices, have a small direct economic impact on lessees, operators, transporters, and purchasers. These minor added expenses would primarily relate to incorporating the new requirements into existing records management practices and procedures. An estimated 200 to 300 purchasers and transporters would have new recordkeeping responsibilities under this proposed rule. It is highly probable that purchasers and transporters are already compiling records that would, for the most part, satisfy the proposed requirements. The BLM believes that these new recordkeeping requirements would impose a minimal cost on the regulated community.

Expanded recordkeeping requirements pertaining to water-draining and hot-oiling operations would cost lessees and operators approximately $1.2 million per year in annual ongoing costs. This change would enhance production accountability by making it easier for the BLM to verify the volumes of water that operators drain from storage tanks and the volumes of oil that they temporarily remove from storage, use for operational purposes, and then return to storage.

The fifth and final provision that would involve a direct cost to the regulated community is a proposal that would establish new requirements that would apply to lessees and operators who measure production off-lease, but who are not part of any commingling approval. Of the approximately 1,500 existing off-lease measurement approvals, the BLM estimates that less than 5 percent would be terminated or modified because they do not meet the standards of the proposed rule. Operators of those leases, CAs, or units that do not meet the new requirements would have to install and maintain new meters on the lease, CA, or unit. The BLM estimates that the cost of moving or installing new meters on the lease, CA, or unit would be $20,000 per measurement point, for a one-time total cost to industry of $1.6 million.

This proposed rule would increase the number of categories of violations where immediate assessments could be imposed. The BLM anticipates enforcement actions and immediate assessments would continue to be relatively infrequent occurrences.

To accommodate the issuance of FMP numbers and the inclusion of purchasers and transporters within certain of the rule's requirements, the BLM would need to enhance AFMSS, the BLM's main oil and gas data system. The BLM would also experience an increased workload associated with issuing FMP numbers, diagram reviews, and other administrative requirements. The BLM estimates a one-time cost, spread over a 3-year period, to the BLM of about $29.1 million to implement the proposed changes. On an ongoing basis the BLM estimates its costs would increase by about $3.4 million per year.

In total, the BLM estimates these requirements would increase operator

annual expenses by approximately $13.5 million. In addition, there would be a one-time cost to implement the new provisions of about $121.5 million. The one-time implementation costs would be spread over 3 years, or about $40 million per year.

2. The proposed rule would not create inconsistencies with other agencies' actions. It would not change the relationships of the BLM to other agencies and their actions.

3. The proposed rule would not materially affect entitlements, grants, user fees, or loan programs, or the rights and obligations of their recipients. The proposed rule does not address any of these programs or issues.

4. The proposed rule would not raise novel legal or policy issues arising out of legal mandates, the President's priorities, or the principles set forth in the Executive Order.

Regulatory Flexibility Act

The BLM certifies that this proposed rule would not have a significant economic effect on a substantial number of small entities as defined under the Regulatory Flexibility Act (5 U.S.C. 601 *et seq.*). The Small Business Administration (SBA) has developed size standards to carry out the purposes of the Small Business Act and those size standards can be found at 13 CFR 121.201. Small entities for mining, including the extraction of crude oil and natural gas, are defined by the SBA as an individual, limited partnership, or small company considered being at ''arm's length'' from the control of any parent companies, with fewer than 500 employees.

Of the 6,628 domestic firms involved nationwide in oil and gas extraction, 99 percent, or 6,530, had fewer than 500 employees. There are another 10,160 firms involved nationwide in drilling and other support functions. Of the firms providing support functions, 98 percent of those firms had fewer than 500 employees. Based on this national data, the preponderance of firms involved in developing on-shore oil and gas resources are small entities as defined by the SBA.

In addition to lessees and operators, the BLM must consider the size of the purchasers' and transporters' firms. There are multiple North American Industry Classification System (NAICS) categories that could include firms involved in the purchasing and transporting of petroleum from Federal and Indian leases. For example, some purchasers could be petroleum refiners. For petroleum refiners, the SBA standard says a small business cannot have more than 1,500 employees or more than 125,000 barrels per calendar day total Operable Atmospheric Crude Oil Distillation capacity. Capacity includes owned or leased facilities as well as facilities under a processing agreement or an arrangement such as an exchange agreement or a throughput agreement. For wholesalers, including petroleum wholesalers, the SBA standard for a small entity is one that has fewer than 100 employees. For truck transporters, the SBA defines a small entity as a firm with less than $27.5 million in annual receipts. For natural gas pipeline operators, the standard is a maximum of $27.5 million in receipts per year. For crude oil pipelines the standard is fewer than 1,500 employees.

As discussed above, national data, including number of firms, number of employees by firm, and annual receipts by firm, is not discretely identified for purchasers and transporters of petroleum or natural gas. The potentially affected purchasers and transporters would likely be a minor component in any number of the relevant NAICS categories. Of the few NAICS categories where reported employment, receipt, and production data matches up with the SBA size standards, the preponderance of the firms would be considered small entities as defined by the SBA.

Based on the available national data, the preponderance of firms involved in developing, producing, purchasing, and transporting oil and gas from Federal and Indian lands are small entities as defined by the SBA. As such, it appears a substantial number of small entities would be potentially affected by the proposed rule to some degree.

Using the best available government data, the BLM estimates there are approximately 3,700 lessees and operators conducting operations on Federal and Indian lands that could be affected by the proposed rule. Additionally, the BLM estimates there are approximately 200 to 300 purchasers and transporters operating on Federal and Indian lands that potentially could be affected by this proposed rule.

In addition to determining whether a substantial number of small entities are likely to be affected by this rule, the BLM must also determine whether the rule is anticipated to have a significant economic impact on those small entities. Based on its analysis, the BLM anticipates the cost of implementing the proposed provisions to potentially reduce the average annual net income of impacted small entities by less than 0.001 percent. Except for the electronic filing requirement, all of the proposed provisions would apply to entities regardless of size. However, entities with the greatest activity would likely experience the greatest increase in compliance costs. As a general matter, smaller business entities are more likely to operate a smaller number of sites and FMPs for which they would have to submit the information and documentation that this proposed rule would require. Copies of the analysis can be obtained from the contact person listed earlier (see **FOR FURTHER INFORMATION CONTACT**).

Based on the available information, we conclude that the proposed rule would not have a significant impact on a substantial number of small entities. Therefore, a final Regulatory Flexibility Analysis is not required, and a Small Entity Compliance Guide is not required.

Small Business Regulatory Enforcement Fairness Act

This proposed rule is not a major rule under 5 U.S.C. 804(2), the Small Business Regulatory Enforcement Fairness Act. This rule would not have an annual effect on the economy of $100 million or more. As explained in the discussion above concerning Executive Order 12866, Regulatory Planning and Review, changes in the proposed rule would increase the ongoing cost associated with the development of Federal and Indian oil and gas resources by an estimated $13.5 million annually for all operators together. In addition, there would be a one-time cost to implement the new provisions of about $121.5 million. The one-time implementation costs would be spread over 3 years, or about $40 million per year.

This rule proposes to replace Order 3 to ensure that oil and gas produced from Federal and Indian leases is properly and securely handled so that these resources are accurately accounted for.

This proposed rule:

- Would not cause a major increase in costs or prices for consumers, individual industries, Federal, State, tribal, or local government agencies, or geographic regions; and
- Would not have significant adverse effects on competition, employment, investment, productivity, innovation, or the ability of U.S.-based enterprises to compete with foreign-based enterprises.

Unfunded Mandates Reform Act

In accordance with the Unfunded Mandates Reform Act (2 U.S.C. 1501 *et seq.*), the BLM finds that:

- This proposed rule would not ''significantly or uniquely'' affect small governments. A Small Government Agency Plan is unnecessary.

• This proposed rule would not produce a Federal mandate of $100 million or greater in any single year.

The proposed rule is not a ''significant regulatory action'' under the Unfunded Mandates Reform Act. The changes proposed in this rule would not impose any requirements on any non-Federal governmental entity.

Executive Order 12630, Governmental Actions and Interference With Constitutionally Protected Property Rights (Takings)

Under Executive Order 12630, the proposed rule would not have significant takings implications. A takings implication assessment is not required. This proposed rule would set minimum standards for ensuring that oil and gas produced from Federal and Indian (except the Osage Tribe) oil and gas leases are properly and securely handled, so as to prevent theft and loss and to enable accurate measurement and production accountability. All such actions are subject to lease terms which expressly require that subsequent lease activities be conducted in compliance with applicable Federal laws and regulations. The proposed rule conforms to the terms of those Federal leases and applicable statutes, and as such the proposed rule is not a governmental action capable of interfering with constitutionally protected property rights. Therefore, the proposed rule would not cause a taking of private property or require further discussion of takings implications under this Executive Order.

Executive Order 13132, Federalism

In accordance with Executive Order 13132, the BLM finds that the proposed rule would not have significant Federalism effects. A Federalism assessment is not required. This proposed rule would not change the role of or responsibilities among Federal, State, and local governmental entities. It does not relate to the structure and role of the states and would not have direct, substantive, or significant effects on states.

Executive Order 13175, Consultation and Coordination with Indian Tribal Governments

Under Executive Order 13175, the President's memorandum of April 29, 1994, ''Government-to-Government Relations with Native American Tribal Governments'' (59 FR 22951), and 512 Departmental Manual 2, the BLM evaluated possible effects of the proposed rule on federally recognized Indian tribes. The BLM approves proposed operations on all Indian onshore oil and gas leases (other than those of the Osage Tribe). Therefore, the proposed rule has the potential to affect Indian tribes. In conformance with the Secretary's policy on tribal consultation, the BLM held three tribal consultation meetings to which more than 175 tribal entities were invited. The consultations were held in:

• Tulsa, Oklahoma on July 11, 2011;
• Farmington, New Mexico on July 13, 2011; and
• Billings, Montana on August 24, 2011.
• In addition, the BLM hosted a tribal workshop and webcast on April 24, 2013.

The purpose of these meetings was to solicit initial feedback and preliminary comments from the tribes. Comments from the tribes will continue to be accepted and consultation will continue as this rulemaking proceeds. To date, the tribes have expressed concerns about the subordination of tribal laws, rules, and regulations to the proposed rule; tribes' representation on the Department of the Interior's Gas and Oil Measurement Team; and the BLM's Inspection and Enforcement program's ability to enforce the terms of this proposed rule. While the BLM will continue to address these concerns, none of the concerns expressed affect the substance of the proposed rule.

Executive Order 12988, Civil Justice Reform

Under Executive Order 12988, the Office of the Solicitor has determined that the proposed rule would not unduly burden the judicial system and meets the requirements of Sections 3(a) and 3(b)(2) of the Order. The Office of the Solicitor has reviewed the proposed rule to eliminate drafting errors and ambiguity. It has been written to minimize litigation, provide clear legal standards for affected conduct rather than general standards, and promote simplification and burden reduction.

Executive Order 13352, Facilitation of Cooperative Conservation

Under Executive Order 13352, the BLM has determined that this proposed rule would not impede the facilitation of cooperative conservation and would take appropriate account of and consider the interests of persons with ownership or other legally recognized interests in land or other natural resources. This rulemaking process will involve Federal, State, local and tribal governments, private for-profit and nonprofit institutions, other nongovernmental entities and individuals in the decision-making via the public comment process for the proposed rule. The process would provide that the programs, projects, and activities are consistent with protecting public health and safety.

Paperwork Reduction Act

I. Overview

The Paperwork Reduction Act (PRA) (44 U.S.C. 3501–3521) provides that an agency may not conduct or sponsor, and a person is not required to respond to, a ''collection of information,'' unless it displays a currently valid control number. Collections of information include requests and requirements that an individual, partnership, or corporation obtain information, and report it to a Federal agency. 44 U.S.C. 3502(3); 5 CFR 1320.3(c) and (k).

This proposed rule contains information collection requirements that are subject to review by OMB under the PRA. Collections of information include any request or requirement that persons obtain, maintain, retain, or report information to an agency, or disclose information to a third party or to the public (44 U.S.C. 3502(3) and 5 CFR 1320.3(c)). In accordance with the PRA, the BLM is inviting public comment on proposed new information collection requirements for which the BLM is requesting a new OMB control number.

Some of the proposed requirements would add new uses and burdens for BLM Form 3160–5, Sundry Notices and Reports on Wells. Form 3160–5 has been approved by OMB for uses enumerated at 43 CFR 3162.3–2, and is one of 17 information collection activities that are included in control number 1004–0137, Onshore Oil and Gas Operations (43 CFR part 3160) (expiration date January 31, 2018). After promulgating a final rule and receiving approval (in the form of a new control number) from the OMB, the BLM intends to ask OMB to combine the activities associated with the new control number with existing Control Number 1004–0137.

The information collection activities in this proposed rule are described below along with estimates of the annual burdens. Included in the burden estimates are the time for reviewing instructions, searching existing data sources, gathering and maintaining the data needed, and completing and reviewing each component of the proposed information collection requirements.

The information collection request for this proposed rule has been submitted to OMB for review under 44 U.S.C. 3507(d). A copy of the request can be obtained from the BLM by electronic

mail request to Jennifer Spencer at *j35spenc@blm.gov* or by telephone request to 202–912–7146. You may also review the information collection request online at *http://www.reginfo.gov/public/do/PRAMain.*

The BLM requests comments on the following subjects:

1. Whether the collection of information is necessary for the proper functioning of the BLM, including whether the information will have practical utility;

2. The accuracy of the BLM's estimate of the burden of collecting the information, including the validity of the methodology and assumptions used;

3. The quality, utility, and clarity of the information to be collected; and

4. How to minimize the information collection burden on those who are to respond, including the use of appropriate automated, electronic, mechanical, or other forms of information technology.

If you want to comment on the information collection requirements of this proposed rule, please send your comments directly to OMB, with a copy to the BLM, as directed in the **ADDRESSES** section of this preamble. Please identify your comments with ''OMB Control Number 1004–XXXX.'' OMB is required to make a decision concerning the collection of information contained in this proposed rule between 30 to 60 days after publication of this document in the **Federal Register.** Therefore, a comment to OMB is best assured of having its full effect if OMB receives it by August 12, 2015.

II. Summary of Proposed Information Collection Requirements

Title: Oil and Gas Facility Site Security.

Forms: Form 3160–5, Sundry Notices and Reports on Wells.

OMB Control Number: None. This is a new collection of information.

Description of Respondents: Holders of Federal and Indian (except Osage Tribe) oil and gas leases, operators, purchasers, transporters, and any other person directly involved in producing, transporting, purchasing, or selling, including measuring, oil or gas through the point of royalty measurement or the point of first sale.

Respondents' Obligation: Required to obtain or retain a benefit.

Frequency of Collection: On occasion.

Abstract: This proposed rule would establish minimum security standards for Federal and Indian (except Osage Tribe) oil and gas leases.

Estimated Total Annual Burden Hours: The proposed rule would result in 147,181 estimated responses and 849,452 estimated hours of burden annually. Of these totals, 127,876 responses and 782,902 hours would be for new uses of Sundry Notices.

III. New Uses of Sundry Notices (Form 3160–5)

A. Variance Requests

This proposed rule includes a new § 3170.6, which would authorize any party subject to the regulations in 43 CFR part 3170 to request a variance from any of the regulations in part 3170. Those would include the proposed new subpart 3173 set forth above. While proposed § 3170.6 states that a request for a variance should be filed using the BLM's electronic system, it also allows the use of Sundry Notices. Thus, § 3170.6 represents a new use of Form 3160–5, Sundry Notices and Reports on Wells.

B. Information Collection Activities Listed in Proposed § 3173.10

Proposed § 3173.10 would list additional information collection requirements that would be new uses of Sundry Notices. These requirements would apply to all parties involved in Federal and Indian (except Osage Tribe) oil and gas production. As discussed below, other proposed regulations provide detail on these requirements.

1. Submission of Site Facility Diagrams for Existing Facilities

Proposed § 3173.11(d) would apply to facilities in service before the effective date of the final rule. Operators of each such facility would be required to submit a new site facility diagram that complies with paragraphs (a) through (c) of § 3173.11 within 30 days after the BLM assigns an FMP number. The requirements of paragraphs (a) through (c) are described in detail below.

Proposed § 3173.11(e) would apply to facilities that are in service before the effective date of the final rule, and for which the BLM will not assign an FMP (*e.g.,* facilities that dispose of produced water). Operators of each such facility would be required to submit a new site facility diagram within 60 days after the effective date of the final rule.

2. Site Facility Diagrams for New or Modified Facilities

Proposed § 3173.11(c)(2) would require a site facility diagram for all new facilities and for modification of a facility. Each site facility diagram would be required to:

- Be submitted electronically to the BLM with a completed Sundry Notice for each lease, unit PA, or CA through the BLM's Well Information System (WIS) or other system identified by the BLM;
- Be submitted within 30 days of completion of construction of a new facility, when existing facilities are modified, or when a non-Federal facility located on a Federal lease or federally approved unit or CA is constructed or modified;
- Reflect the position of the production and water recovery equipment, piping for oil, gas, and water, and metering or other measuring systems in relation to each other, but need not be to scale;
- Commencing with the header, identify all of the equipment, including, but not limited to, the header, wellhead, piping, tanks, and metering systems located on the site, and include the appropriate valves and any other equipment used in the handling, conditioning, or disposal of production and water, and indicate the direction of flow;
- Identify by API number the wells flowing into headers;
- Indicate which valve(s) must be sealed and in what position during the production and sales phases and during the conduct of other production activities (*e.g.,* circulating tanks or drawing off water), which may be shown by an attachment, if necessary;
- Clearly identify the lease, unit PA, or CA to which the diagram applies and the land description of the facility, and the name of the company submitting the diagram, with co-located facilities being identified for each lease, unit PA, or CA; and
- Clearly identify on the diagram, or an attachment, all meters and measurement equipment. Specifically identify all approved and assigned FMPs.

If another operator operates a co-located facility, the site facility diagram would be required to depict the co-located facilities or list them as an attachment and identify them by company name, facility name(s), lease, unit PA, or communitization agreement number, and FMP number(s).

When describing co-located facilities operated by one operator, the site facility diagram would be required to include a skeleton diagram of the co-located facility, showing equipment only. For storage facilities common to co-located facilities operated by one operator, one diagram would be sufficient.

If the operator claims royalty-free use, the site facility diagram would be required to clearly identify on the diagram or as an attachment, the equipment for which the operator claims royalty-free use.

3. Application for Approval of an FMP for Existing Measurement Facilities

Section 3173.12 of the proposed rule would require operators to obtain an FMP number for all measurement points where the measurement affects the calculation of the volume or quality of production on which royalty is owed, and thus establish a standardized process for BLM approval of the point at which oil or gas must be measured for the purpose of determining royalty. The deadline for submitting a request for an FMP number for facilities in service on or before the effective date of the final rule would depend on the production level of the lease, unit PA, CA, or CAA.

For stand-alone leases, unit PAs, CAs, and CAAs that produce 6,000 Mcf or more of gas per month, or 40 barrels or more of oil per month, the operator would have to apply for approval of the FMP(s) within 9 months after the effective date of the final rule. For stand-alone leases, unit PAs, CAs, or CAAs that produce 3,000 Mcf or more but less than 6,000 Mcf of gas per month, or 20 barrels or more but less than 40 barrels of oil per month, the operator would have to apply for approval of the FMP(s) within 18 months after the effective date of the final rule. For stand-alone leases, unit PAs, CAs, or CAAs that produce less than 3,000 Mcf of gas per month and less than 20 barrels of oil per month, the operator would have to apply for approval of the FMP(s) within 27 months after the effective date of the final rule. These thresholds would be calculated as an average over the 12 months preceding the effective date of the final rule or the period the lease, unit, CA, or CAA has been in production, whichever is shorter.

Proposed § 3173.12(f) would require all applications for approval of an FMP to include the following:

- A complete Sundry Notice;
- The applicable Measurement Type Code specified in the BLM's Well Information System (WIS) or any successor electronic system;
- For gas and oil, a list of the measurement component names and the manufacturer, model, and serial number of each component;
- For gas, the gas sampling method (*i.e.,* spot, composite, or on-line gas chromatograph); and
- Where production from more than one well will flow to the requested FMP, a list of the API well numbers associated with the FMP.

4. Request for Approval of an FMP for a New Measurement Facility

Proposed § 3173.12(d) would require operators to obtain approval of an FMP for new measurement facilities (*i.e.,* measurement facilities coming into service after the effective date of the final rule) before any production leaves the facility.

5. Modifications to an FMP

Proposed § 3173.13(d)(1) would require operators with an approved FMP to submit a Sundry Notice that details any modifications to the FMP within 20 business days after the change. These details would include, but would not be limited to, the old and new meter manufacturer, serial number(s), owner's name, tank number(s), and wells or facilities using the FMP. The Sundry Notice would be required to specify what was changed, why the change was made, the effective date, and include, if appropriate, an amended site facility diagram.

6. Request for Approval of a CAA

Proposed § 3173.15 would require the following information:

- A completed Sundry Notice seeking approval of commingling and allocation, and of off-lease measurement, if any of the proposed FMPs are outside the boundaries of any of the leases, units, or CAs whose production would be commingled;
- A proposed allocation agreement and a proposed allocation schedule (including allocation of produced water) signed by each operator of each of the leases, unit PAs, or CAs whose production would be included in the CAA;
- A list of all Federal or Indian lease, unit PA, or communitization agreement numbers in the proposed CAA, specifying the type of production (*i.e.,* oil, gas, or both) for which commingling is requested;
- A map or maps showing the boundaries of all the leases, units, unit PAs, or CAs whose production is proposed to be commingled; the proposed location by land description for the FMP used to measure the commingled production; and a map or diagram of existing or planned facilities that shows the location of all wellheads, production facilities, flow lines (including water flow lines), and FMPs existing or proposed to be installed to the extent known or anticipated;
- Documentation demonstrating that each of the leases, unit PAs, or CAs proposed for inclusion in the CAA is producing in paying quantities (or, in the case of Federal leases, is capable of production in paying quantities) pending approval of the CAA; and
- All gas analyses, including Btu content (if the CAA request includes gas) and all oil gravities (if the CAA request includes oil) for previous periods of production from the leases, units, unit PAs, or CAs proposed for inclusion in the CAA, up to 6 years before the date of the application for approval of the CAA.

For existing facilities, site facility diagrams clearly showing any proposed change to current site facility diagrams would be required. For all new proposed facilities (including water handling facilities), the application for approval of a CAA would be required to include a schematic or engineering drawing showing the relative location of pipes, tanks, meters, separators, dehydrators, compressors, and other equipment.

If new surface disturbance is proposed on one or more of the leases, units, or CAs and the surface is managed by the BLM, the application would be required to include a request for approval of the proposed surface disturbance.

If new surface disturbance is proposed on BLM-managed land outside any of the leases, units, or CAs whose production would be commingled, the application would be required to include a right-of-way grant application, under 43 CFR part 2880 if the FMP is on a pipeline, or under 43 CFR part 2800, if the FMP is a storage tank. Applications for rights-of-way are authorized under control number 0596–0082.

If new surface disturbance is proposed on Federal land managed by an agency other than the BLM, the application would be required to include written approval from the appropriate surface-management agency.

7. Response to Notice of Insufficient CAA

Proposed § 3173.16 would provide that upon receipt of a request for an FMP number for a facility associated with a CAA existing on the effective date of the final rule, the BLM would review the existing CAA for consistency with proposed § 3173.14. The BLM would then notify the operator of any inconsistencies or deficiencies. The operator would be obligated to correct the flaws, or provide additional information, within 20 business days of receiving the notice.

8. Request to Modify a CAA

Proposed § 3173.18 would provide that a CAA may be modified at the request of all the operators who are parties to the CAA. The following information would be required in a request to modify a CAA:

- A completed Sundry Notice describing the modification requested;
- A new allocation schedule, if appropriate; and
- Certification by each operator that it agrees to the CAA modification.

9. Request for Approval of Off-Lease Measurement

Proposed § 3173.23(a) through (j) would require the following information in an application for approval of off-lease measurement:

- A completed Sundry Notice;
- Justification for off-lease measurement;
- A topographic map of appropriate scale showing the following: The boundary of the lease(s), unit(s), or CA(s) from which the production originates; the location by land description of all wells, pipelines, facilities, and FMPs associated with the proposal, with equipment identified as existing or proposed; and the surface ownership of all land on which equipment is, or is proposed to be, located;
- A schematic or engineering drawing for all new proposed facilities showing the relative location of pipes, tanks, meters, separators, dehydrators, compressors, and other equipment; and
- A statement that indicates whether the proposal includes all, or only a portion of, the production from the lease, unit, or CA and if the proposal includes only a portion of the production, the application would be required to identify the FMP(s) where the remainder of the production from the lease, unit, or CA is measured or is proposed to be measured.

For existing facilities, the application would be required to include site facility diagrams clearly showing any proposed change to current site facility diagrams.

If any of the proposed off-lease measurement facilities are located on non-federally owned surface, the application would be required to include a written concurrence signed by the owner(s) of the surface and the owner(s) of the measurement facilities, including each owner(s)' name, address, and telephone number, granting the BLM unrestricted access to the off-lease measurement facility and the surface on which it is located, for the purpose of inspecting any production, measurement, water handling, or transportation equipment located on the non-Federal surface up to and including the FMP, and for otherwise verifying production accountability.

If the proposed off-lease FMP consists of a storage tank or is on a pipeline, a right-of-way grant application would be required. Applications for rights-of-way are authorized under control number 0596–0082.

If the operator proposes to use production from the lease, unit or CA as fuel at the off-lease measurement facility without payment of royalty, the application would be required to include an application for approval of off-lease royalty-free use under applicable rules.

10. Response to Notice of Insufficient Off-Lease Measurement Approval

Proposed § 3173.25 provides that upon receipt of an operator's request for assignment of an FMP number to a facility associated with an off-lease measurement approval existing on the effect date of the final rule, the BLM would review the existing approval for consistency with the requirements listed at proposed § 3173.22. The BLM would notify the operator of any inconsistencies or deficiencies. The operator would be obligated to correct any of the identified flaws within 20 business days of receiving the notice.

11. Request to Amend Approval of Off-Lease Measurement

Proposed § 3173.23(k) provides that to apply for an amendment of an existing approval of off-lease measurement, the operator must submit the information listed at paragraphs (a) through (j) of proposed § 3173.23 to the extent the previously submitted information has changed.

IV. Other Proposed Information Collection Activities

A. Required Records Submission

Proposed § 3170.7(h) would apply to lessees, operators, purchasers, transporters, and any other person directly involved in producing, transporting, purchasing, selling, or measuring oil or gas through the point of royalty measurement of the point of first sale, whichever is later. Those parties would be required to submit all records that are relevant to determining the quality, quantity, disposition, and verification of production attributable to Federal or Indian leases upon request, in accordance with a regulation, written order, Onshore Order, NTL, or COA.

B. Water-Draining Records

Proposed § 3173.6 would require submission of information when water is drained from a production storage tank. The operator, purchaser, or transporter, as appropriate, would have to submit the following information:

- Federal or Indian lease, unit PA, or CA number(s);
- FMP number associated with the tank;
- The tank location by land description;
- The unique tank number and nominal capacity;
- Date and time for opening gauge;
- Opening gauge and color cut measurements;
- Name of the person and company draining the tank;
- Unique identifying number of each seal removed;
- Time of the closing gauge;
- Closing gauge measurement; and
- Unique identifying number of each seal installed.

C. Hot Oiling, Clean-up, and Completion Records

Proposed § 3173.7 would require the submission of information during hot oil, clean-up, or completion operations, or any other situation where the operator removes oil from storage, temporarily uses it for operational purposes, and then returns it to storage on the same lease, unit PA, or CA. The operator would have to submit the following information:

- Federal or Indian lease, unit PA, or communitization agreement number(s);
- FMP number associated with the tank or group of tanks;
- The tank location by land description;
- The unique tank number and nominal capacity;
- Date and time of the opening gauge;
- Opening gauge measurement;
- Name of the person and company removing production from the tank;
- Unique identifying number of each seal removed;
- Time of the closing gauge;
- Closing gauge measurement;
- Unique identifying number of each seal installed;
- How the oil was used; and
- Where the oil was used (*i.e.,* well or facility name and number).

D. Report of Theft or Mishandling of Production

Proposed 3173.8 would require operators, purchasers, or transporters to submit a report no later than the next business day after discovery of an incident of apparent theft or mishandling of production. A written incident report would have to follow an oral report within 10 business days of the oral report. The incident report would include the following information:

- Company name and name of the person reporting the incident;
- Lease, unit PA, or communitization agreement number, well or facility name

and number, and FMP number, as appropriate;

- Land description of the facility location where the incident occurred;
- The estimated volume of production removed;
- The manner in which access was obtained to the production or how the mishandling occurred;
- The name of the person who discovered the incident; and
- The date and time of the discovery of the incident.

E. Required Recordkeeping for Inventory and Seal Records

Proposed § 3173.9 would require operators to measure and record at the end of each calendar month an inventory consisting of total observed volume in storage.

For each seal, the operator would be required to maintain a record that includes the unique identifying number of each seal and the valve or meter component on which the seal is or was used; the date of installation or removal of each seal; for valves, the position (open or closed) in which it was sealed; and the reason the seal was removed.

V. Burden Estimates

The following table details the proposed information collection activities that would be new uses of Form 3160–5, Sundry Notices and Reports on Wells.

BILLING CODE 4310–84–C

A. Type of Response	B. Number of Responses	C. Hours per Response	D. Total Hours (Column B x Column C)
Variance Requests (43 CFR 3170.6)	100	8	800
Submission of Site Facility Diagrams for Existing Facilities (43 CFR 3173.11(d) and (e))	42,000	8	336,000
Site Facility Diagrams for New or Modified Facilities (43 CFR 3173.11(c)(2))	5,000	8	40,000
Application for Approval of an FMP for Existing Measurement Facilities (43 CFR 3173.12)	73,500	4	294,000
Request for Approval of an FMP for a New Measurement Facility (43 CFR 3173.12(d))	2,000	4	8,000
Modifications to an FMP (43 CFR 3173.13(d)(1))	2,000	4	8,000
Request for Approval of a CAA (43 CFR 3173.15)	1,000	40	40,000
Response to Notice of Insufficient CAA (43 CFR 3173.16)	118	40	4,720
Request to Modify a CAA (43 CFR 3173.18)	1,000	40	40,000
Request for Approval of Off-Lease Measurement (43 CFR 3173.23(a) through (j))	1,100	10	11,000
Response to Notice of Insufficient Off-Lease Measurement Approval (43 CFR 3173.25)	33	4	132
Request to Amend Approval of Off-Lease Measurement (43 CFR 3173.23(k))	25	10	250
Totals	127,876	—	782,902

The following table details the rest of the proposed information collection activities.

A. Type of Response	B. Number of Responses	C. Hours Per Response	D. Total Hours
Records Submission Requirements (43 CFR 3170.7 (h))	4,300	5	21,500
Water-Draining Records (43 CFR 3173.6)	5,000	2	10,000
Hot Oiling, Clean-Up, and Completion Records (43 CFR 3173.7)	5,000	2	10,000
Report of Theft or Mishandling of Production (43 CFR 3173.8)	5	10	50
Required Recordkeeping for Inventory and Seal Records (43 CFR 3173.9)	5,000	5	25,000
Totals	19,305		66,550

The proposed rule would remove [7] 43 CFR 3162.7–5, which would result in the removal of three information collection activities from control number 1004–0137, as shown in the following table:

A. Type of Response	B. Number of Responses Authorized Annually	C. Hours Per Response Authorized Annually	D. Total Hours (Column B x Column C)
Schematic / Facility Diagrams (43 CFR 3162.4-1(a) and 3162.7-5(d)(1))[7]	1,000	8	8,000
Records for Seals (43 CFR 3162.7-5(b))	90,000	0.75	67,500
Site Security (43 CFR 3162.7-5(c))	2,500	8	20,000
Totals	93,500		95,500

[7] Section 3162.4–1 is merely descriptive. Section 3162.7–5 is prescriptive.

BILLING CODE 4310–84–P

The proposed rule would result in the following program changes to 1004–0137 due to the removal of 43 CFR 3162.75, and due to the addition of new requirements.

1. The total estimated burdens would be 147,181 responses and 849,452 hours. Of those totals, 127,876 responses and 782,902 hours would be due to new uses of Sundry Notices.

2. The proposed rule would remove 43 CFR 3162.7–5, which would result in the removal of three information collection activities from control number 1004–0137 that represent a total of 93,500 estimated responses and 95,500 burden hours.

3. The net estimated burdens for the proposed rule would be 53,681 responses and 753,952 hours.

National Environmental Policy Act

The BLM has prepared a draft environmental assessment (EA) that concludes that the proposed rule would not constitute a major Federal action significantly affecting the quality of the human environment under § 102(2)(C) of the National Environmental Policy Act (NEPA), 42 U.S.C. 4332(2)(C). Under the draft EA, a detailed statement under NEPA is therefore not required. A copy of the draft EA can be viewed at *www.regulations.gov* (use the search term 1004–AE15, open the Docket Folder, and look under Supporting Documents) and at the address specified in the **ADDRESSES** section.

The proposed rule would not affect the environment significantly because, for the most part, the revisions to the requirements of Order 3 proposed here would involve changes that are of an administrative, technical, or procedural nature that would apply to the BLM's and the lessee's and/or operator's management processes. For example, operators would now be required to maintain records generated for Federal leases for at least 7 years, consistent with statutory requirements. Similarly, the proposed rule would require more detailed information on site facility diagrams such as information about the manufacturer, model, and serial number of equipment, and information regarding royalty free use. The submission of this additional information would not result in any on-the-ground effects. However, compliance with some of these requirements may result in additional surface disturbing activities (*e.g.,* additional surface disturbance might be required if an operator with an existing off lease measurement authorization had to move those measurement facilities back on lease because they did not comply with the requirements of this proposed rule.) Such surface disturbing activities would be conducted in accordance with existing surface operating standards and guidelines for oil and gas exploration and development and include appropriate Best Management Practices (BMP). The BLM will consider any new information we receive during the public comment period for the proposed rule that may inform our analysis of the potential environmental impacts of the proposed rule.

Executive Order 13211, Actions Concerning Regulations That Significantly Affect Energy Supply, Distribution, or Use

This proposed rule would not have a substantial direct effect on the nation's energy supply, distribution or use, including a shortfall in supply or price increase. Changes in this proposed rule would strengthen the BLM's accountability requirements for operators under Federal and Indian oil and gas leases. As discussed above, these changes would increase recordkeeping requirements, place additional restrictions on CAAs and on off-lease measurement, and provide for significant new immediate assessments for violations of the regulations. All of these changes are administrative in nature and would have a one-time transition cost of an average of about $32,800 per regulated entity and an ongoing annual average cost of about $3,600 per entity per year. Entities with the greatest activity (*e.g.,* numerous FMPs) would incur higher costs.

The BLM expects that the proposed rule would not result in a net change in the quantity of oil and gas that is produced from oil and gas leases on Federal and Indian lands.

Information Quality Act

In developing this proposed rule, the BLM did not conduct or use a study, experiment, or survey requiring peer review under the Information Quality Act (Pub. L. 106–554, Appendix C Title IV, § 515, 114 Stat. 2763A–153).

Clarity of the Regulations

Executive Order 12866 requires each agency to write regulations that are simple and easy to understand. The BLM invites your comments on how to make these proposed regulations easier to understand, including answers to questions such as the following:

1. Are the requirements in the proposed regulations clearly stated?

2. Do the proposed regulations contain technical language or jargon that interferes with their clarity?

3. Does the format of the proposed regulations (grouping and order of sections, use of headings, paragraphing, etc.) aid or reduce their clarity?

4. Would the regulations be easier to understand if they were divided into more (but shorter) sections?

5. Is the description of the proposed regulations in the **SUPPLEMENTARY INFORMATION** section of this preamble helpful in understanding the proposed regulations? How could this description be more helpful in making the proposed regulations easier to understand?

Please send any comments you have on the clarity of the regulations to the address s specified in the **ADDRESSES** section.

Authors

The principal author of this proposed rule is Michael Wade, Senior Oil and Gas Compliance Specialist, BLM, Washington Office. Contributing authors include:

Steve McCracken, Petroleum Engineering Technician, BLM, Great Falls Field Office; Darla McMillan, Petroleum Engineering Technician, BLM, Moore Field Office; Leslie Peterson, Petroleum Engineer, BLM, Royal Gorge Field Office; Loren Wickstorm, Petroleum Engineering Technician, BLM, Dolores Field Office; Cris Carey, ONRR, Denver Office; Luke Lundmark, ONRR, Denver Office; and Vicky Stafford, ONRR, Denver Office. The team was assisted by Rich Estabrook, Petroleum Engineer Washington Office; Faith Bremner, Division of Regulatory Affairs, BLM, Washington Office; and Geoffrey Heath, Office of the Solicitor, DOI, Washington Office.

List of Subjects

43 CFR part 3160

Administrative practice and procedure; Government contracts; Indians-lands; Mineral royalties; Oil and gas exploration; Penalties; Public lands—mineral resources; Reporting and recordkeeping requirements.

43 CFR part 3170

Government contracts; Indians-lands; Mineral royalties; Oil and gas exploration; Penalties; Public lands—mineral resources; Reporting and recordkeeping requirements.

Dated: July 1, 2015.__

Janice M. Schneider,

Assistant Secretary,

Land and Minerals Management.

43 CFR Chapter II

For the reasons set out in the preamble, the Bureau of Land Management proposes to amend 43 CFR chapter II as follows:

PART 3160—ONSHORE OIL AND GAS OPERATIONS

■ 1. Revise the authority citation for part 3160 to read as follows:

AUTHORITY: 25 U.S.C. 396, 396d and 2107; 30 U.S.C. 189, 306, 359, and 1751; and 43 U.S.C. 1732(b), 1733 and 1740.

■ 2. Amend § 3160.0–3 by removing the words ''the Federal Oil and Gas Royalty Management Act of 1982 (30 U.S.C. 1701)'' and adding in their place the words ''the Federal Oil and Gas Royalty Management Act of 1982, as amended by the Federal Oil and Gas Royalty Simplification Act of 1996 (30 U.S.C. 1701 *et seq.*)''.

■ 3. Revise § 3161.1 to read as follows:

§ 3161.1 Jurisdiction.

The regulations in this part apply to:

(a) All Federal and Indian onshore oil and gas leases (other than those of the Osage Tribe);

(b) All onshore facility measurement points where Federal or Indian oil or gas is measured;

(c) Indian Mineral Development Act agreements for oil and gas, unless specifically excluded in the agreement;

(d) Leases and other business agreements for the development of tribal energy resources under a Tribal Energy Resource Agreement entered into with the Secretary, unless specifically excluded in the lease, other business agreement, or Tribal Energy Resource Agreement; and

(e) State or private tracts committed to a federally approved unit or communitization agreement as defined by or established under 43 CFR subpart 3105 or 43 CFR part 3180.

■ 4. Amend § 3162.3–2 by adding paragraph (d) to read as follows:

§ 3162.3–2 Subsequent well operations.

* * * * *

(d) For details on how to apply for approval of a facility measurement point; approval for surface or subsurface commingling from different leases, unit participating areas and communitized areas; or approval for off-lease measurement, see 43 CFR 3173.12, 3173.15, and 3173.23, respectively.

■ 5. Amend § 3162.4–1 by revising paragraphs (a) and (d) and adding paragraph (e) to read as follows:

§ 3162.4–1 Well records and reports.

(a) The operator must keep accurate and complete records with respect to:

(1) All lease operations, including, but not limited to, drilling, producing, redrilling, repairing, plugging back, and abandonment operations;

(2) Production facilities and equipment (including schematic diagrams as required by applicable orders and notices); and

(3) Determining and verifying the quantity, quality, and disposition of production from or allocable to Federal or Indian leases (including source records).

* * * * *

(d) All records and reports required by this section must be maintained for the following time periods:

(1)(i) For Federal leases and units or communitized areas that include Federal leases, but do not include Indian leases, 7 years after the records are generated.

(ii) If a judicial proceeding or demand involving such records is timely commenced, the record holder must maintain such records until the final nonappealable decision in such judicial proceeding is made, or with respect to that demand is rendered, unless the Secretary or the applicable delegated State authorizes in writing an earlier release of the requirement to maintain such records.

(2)(i) For Indian leases, and units or communitized areas that include Indian leases, but do not include Federal leases, 6 years after the records are generated.

(ii) If the Secretary or his/her designee notifies the record holder that the Department has initiated or is participating in an audit or investigation involving such records, the record holder must maintain such records until the Secretary or his designee releases the record holder from the obligation to maintain the records.

(3)(i) For units and communitized areas that include both Federal and Indian leases, if the Secretary or his/her designee has notified the record holder within 6 years after the records are generated that an audit or investigation involving such records has been initiated, but a judicial proceeding or demand is not commenced within 7 years after the records are generated, the record holder must retain all records regarding production from the unit or communitized area until the Secretary or his/her designee releases the record holder from the obligation to maintain the records.

(ii) If a judicial proceeding or demand is commenced within 7 years after the records are generated, the record holder must retain all records regarding production from the unit or communitized area until the final nonappealable decision in such judicial proceeding is made, or with respect to that demand is rendered, or until the Secretary or his designee releases the record holder from the obligation to maintain the records, whichever is later, unless the Secretary or his designee authorizes in writing a release of the requirement to maintain such records before a final nonappealable decision is made or rendered.

(e) Record holders include lessees, operators, purchasers, transporters, and any other person directly involved in producing, transporting, purchasing, or selling, including measuring, oil or gas through the point of royalty measurement or the point of first sale, whichever is later. Record holders must maintain records generated during or for the period for which the lessee or operator has an interest in or conducted operations on the lease, or in which a person is involved in transporting, purchasing, or selling production from the lease, for the period of time required in paragraph (d) of this section.

§ 3162.4–3 [Removed]

■ 6. Remove § 3162.4–3.

■ 7. Amend § 3162.6 as follows:

■ a. In paragraph (a), revise the word ''indentification'' to read ''identification''; and

■ b. Revise paragraphs (b) and (c), redesignate paragraph (d) as paragraph (e), and add a new paragraph (d).

The revisions and addition read as follows:

§ 3162.6 Well and facility identification.

* * * * *

(b) For wells located on Federal and Indian lands, the operator must properly identify, by a sign in a conspicuous place, each well, other than those permanently abandoned. The well sign must include the well number, the name of the operator, the lease serial number, and the surveyed location (the quarter-quarter section, section, township and range or other authorized survey designation acceptable to the authorized officer, such as metes and bounds or longitude and latitude). When specifically requested by the authorized officer, the sign must include the unit or communitization agreement name or number. The authorized officer may also require the sign to include the name of the Indian allottee lessor(s) preceding the lease serial number.

(c) All facilities at which oil or gas produced from a Federal or Indian lease is stored, measured, or processed must be clearly identified with a sign that contains the name of the operator, the lease serial number or communitization or unit agreement identification number, as appropriate, and the surveyed location (the quarter-quarter section, section, township and range or other authorized survey designation acceptable to the authorized officer,

such as metes and bounds or longitude and latitude). On Indian leases, the sign also must include the name of the appropriate tribe and whether the lease is tribal or allotted. For situations of 1 tank battery servicing 1 well in the same location, the requirements of this paragraph and paragraph (b) of this section may be met by 1 sign as long as it includes the information required by both paragraphs. In addition, each storage tank must be clearly identified by a unique number. With regard to the quarter-quarter designation and the unique tank number, any such designation established by state law or regulation satisfies this requirement.

(d) All signs must be maintained in legible condition and must be clearly apparent to any person at or approaching the storage, measurement, or transportation point.

* * * * *

§ 3162.7–1 [Amended]

■ 8. Amend § 3162.7–1 by removing paragraph (f).

§ 3162.7–5 [Removed]

■ 9. Remove § 3162.7–5.

■ 10. Amend § 3163.2 by revising paragraphs (a), (b), and (k), to read as follows:

§ 3163.2 Civil penalties.

(a)(1) Whenever an operating rights owner or operator, as appropriate, fails or refuses to comply with any applicable requirements of the Federal Oil and Gas Royalty Management Act, any mineral leasing law, any regulation thereunder, or the terms of any lease or permit issued thereunder, the authorized officer will notify the operating rights owner or operator, as appropriate, in writing of the violation, unless the violation was discovered and reported to the authorized officer by the liable person or the notice was previously issued under § 3163.1 of this subpart.

(2) Whenever a purchaser or transporter who is not an operating rights owner or operator fails or refuses to comply with 30 U.S.C. 1713 or applicable rules or regulations regarding records relevant to determining the quality, quantity, and disposition of oil or gas produced from or allocable to a Federal or Indian oil and gas lease, the authorized officer will notify the purchaser or transporter, as appropriate, in writing of the violation.

(b)(1) If the violation is not corrected within 20 days of such notice or report, or such longer time as the authorized officer may agree to in writing, the operating rights owner, operator, purchaser, or transporter, as appropriate, will be liable for a civil penalty of up to $500 per violation for each day such violation continues, dating from the date of such notice or report. Any amount imposed and paid as assessments under § 3163.1(a)(1) will be deducted from penalties under this section.

(2) If the violation specified in paragraph (a) of this section is not corrected within 40 days of such notice or report, or a longer period as the authorized officer may agree to in writing, the operating rights owner, operator, purchaser, or transporter, as appropriate, will be liable for a civil penalty of up to $5,000 per violation for each day the violation continues, not to exceed a maximum of 60 days, dating from the date of such notice or report. Any amount imposed and paid as assessments under § 3163.1(a)(1) of this subpart will be deducted from penalties under this section.

* * * * *

(k) If the violation continues beyond the 20-day maximum specified in paragraph (d) of this section, the authorized officer will revoke the transporter's authority to remove crude oil from any Federal or Indian lease under the authority of that authorized officer or to remove any crude oil allocated to such lease site. This revocation of the transporter's authority will continue until compliance is achieved and any related penalty paid.

§ 3164.1 [Amended]

■ 11. Amend § 3164.1, in paragraph (b), by removing the third entry in the chart (the reference to Order No. 3, Site Security).

■ 12. Amend § 3165.3 by revising paragraphs (a) and (d) to read as follows:

§ 3165.3 Notice, State Director review and hearing on the record.

(a) *Notice.* (1) Whenever an operating rights owner or operator, as appropriate, fails to comply with any provisions of the lease, the regulations in this part, applicable orders or notices, or any other appropriate order of the authorized officer, the authorized officer will issue a written notice or order to the appropriate party and the lessee(s) to remedy any defaults or violations.

(2) Whenever any purchaser or transporter, who is not an operating rights owner or operator, fails or refuses to comply with 30 U.S.C. 1713 or applicable rules or regulations regarding records relevant to determining the quality, quantity, and disposition of oil or gas produced from or allocable to a Federal or Indian oil and gas lease, applicable orders or notices, or any other appropriate orders of the authorized officer, the authorized officer will give written notice or order to the purchaser or transporter to remedy any violations.

(3) Written orders or a notice of violation, assessment, or proposed penalty will be issued and served by personal service by the authorized officer, or by certified mail, return receipt requested. Service will be deemed to occur when the document is received or 7 business days after the date it is mailed, whichever is earlier.

(4) Any person may designate a representative to receive any notice of violation, order, assessment, or proposed penalty on that person's behalf.

(5) In the case of a major violation, the authorized officer will make a good faith effort to contact such designated representative by telephone, to be followed by a written notice or order. Receipt of a notice or order will be deemed to occur at the time of such verbal communication, and the time of notice and the name of the receiving party will be documented in the file. If the good faith effort to contact the designated representative is unsuccessful, notice of the major violation or order may be given to any person conducting or supervising operations subject to the regulations in this part.

(6) In the case of a minor violation, the authorized officer will only provide a written notice or order to the designated representative.

(7) A copy of all orders, notices, or instructions served on any contractor or field employee or designated representative will also be mailed to the operator. Any notice involving a civil penalty against an operator will be mailed to the operator, with a copy to the operating rights owner.

* * * * *

(d) *Action on request for State Director review.* The State Director will issue a final decision within 10 business days after the receipt of a complete request for administrative review or, where oral presentation has been made, within 10 business days after the oral presentation. The State Director's decision represents the final Bureau decision from which further review may be obtained as provided in paragraph (c) of this section for proposed penalties, and in § 3165.4 for all other decisions.

■ 13. Add part 3170 to read as follows:

PART 3170—ONSHORE OIL AND GAS PRODUCTION

Subpart 3170—Onshore Oil and Gas Production: General

Sec.

3170.1 Authority.
3170.2 Scope.
3170.3 Definitions and acronyms.
3170.4 Prohibitions against by-pass and tampering.
3170.5 [Reserved].
3170.6 Variances.
3170.7 Required recordkeeping, records retention, and records submission.
3170.8 Appeal procedures.
3170.9 Enforcement.

Subpart 3171—[Reserved]

Subpart 3172—[Reserved]

Subpart 3173—Requirements for Site Security and Production Handling

3173.1 Definitions and acronyms.
3173.2 Storage and sales facilities—seals.
3173.3 Oil measurement system components—seals.
3173.4 Federal seals.
3173.5 Removing production from tanks for sale and transportation by truck.
3173.6 Water-draining operations.
3173.7 Hot oiling, clean-up, and completion operations.
3173.8 Report of theft or mishandling of production.
3173.9 Required recordkeeping for inventory and seal records.
3173.10 Form 3160–5, Sundry Notices and Reports on Wells.
3173.11 Site facility diagram.
3173.12 Applying for a facility measurement point.
3173.13 Requirements for approved facility measurement points.
3173.14 Conditions for commingling and allocation approval (surface and downhole).
3173.15 Applying for a commingling and allocation approval.
3173.16 Existing commingling and allocation approvals.
3173.17 Relationship of a commingling and allocation approval to royalty-free use of production.
3173.18 Modification of a commingling and allocation approval.
3173.19 Effective date of a commingling and allocation approval.
3173.20 Terminating a commingling and allocation approval.
3173.21 Combining production downhole in certain circumstances.
3173.22 Requirements for off-lease measurement.
3173.23 Applying for off-lease measurement.
3173.24 Effective date of an off-lease measurement approval.
3173.25 Existing off-lease measurement approval.
3173.26 Relationship of off-lease measurement approval to royalty-free use of production.
3173.27 Termination of off-lease measurement approval.
3173.28 Instances not constituting off-lease measurement, for which no approval is required.
3173.29 Immediate assessments.

Appendix to Subpart 3173

§ 3170.1 Authority.

The authorities for promulgating the regulations in this part are the Mineral Leasing Act, 30 U.S.C. 181 *et seq.;* the Mineral Leasing Act for Acquired Lands, 30 U.S.C. 351 *et seq.;* the Indian Mineral Leasing Act, 25 U.S.C. 396a *et seq.;* the Act of March 3, 1909, 25 U.S.C. 396; and the Indian Mineral Development Act, 25 U.S.C. 2101 *et seq.* Each of these statutes gives the Secretary the authority to promulgate necessary and appropriate rules and regulations. See 30 U.S.C. 189; 30 U.S.C. 359; 25 U.S.C. 396d; 25 U.S.C. 396; and 25 U.S.C. 2107. The Secretary has delegated this authority to the Bureau of Land Management (BLM). For Indian leases, the delegation of authority to the BLM appears at 25 CFR parts 211, 212, 213, 225, and 227. In addition, various provisions of the Federal Oil and Gas Royalty Management Act, as amended, 30 U.S.C. 1701 *et seq.,* provide additional authority regarding records, inspection, and enforcement for onshore oil and gas operations, in addition to granting rulemaking authority at 30 U.S.C. 1751.

§ 3170.2 Scope.

The regulations in this part apply to:

(a) All Federal onshore and Indian oil and gas leases (other than those of the Osage Tribe);

(b) Indian Mineral Development Act (IMDA) agreements for oil and gas, unless specifically excluded in the agreement or unless the relevant provisions of the rule are inconsistent with the agreement;

(c) Leases and other business agreements for the development of tribal energy resources under a Tribal Energy Resource Agreement entered into with the Secretary, unless specifically excluded in the lease, other business agreement, or Tribal Energy Resource Agreement;

(d) State or private tracts committed to a federally approved unit or communitization agreement as defined by or established under 43 CFR subpart 3105 or 43 CFR part 3180; and

(e) All onshore facility measurement points where oil or gas produced from the leases or agreements identified earlier in this section is measured.

§ 3170.3 Definitions and acronyms.

(a) As used in this part, the term:

Allocation means a method or process by which production is measured at a central point and apportioned to the individual lease, unit or unit Participating Area (PA), or Communitized Area (CA) from which the production originated.

API MPMS (followed by a number) means the American Petroleum Institute Manual of Petroleum Measurement Standards, with the number referring to the Chapter and Section in that manual.

Audit trail means all source records necessary to verify and recalculate the volume and quality of oil and gas production measured at facility measurement points (FMPs) and reported to the Office of Natural Resources Revenue (ONRR).

Authorized officer (AO) has the same meaning as defined in 43 CFR 3000.0–5.

By-pass means any piping or other arrangement around or avoiding a meter or other measuring device or method (or component thereof) at an FMP that allows oil or gas to flow without measurement. Equipment that permits the changing of the orifice plate of a gas meter without bleeding the pressure off the gas meter run (*e.g.,* senior fitting) is not considered to be a by-pass.

Commingling, for production accounting and reporting purposes, means combining production from multiple leases, unit PAs, or CAs, or combining production from one or more leases, unit PAs, or CAs with production from State, local governmental, or private properties before the point of royalty measurement. Combining production from multiple wells on a single lease, unit PA, or CA before measurement is not considered commingling for production accounting purposes. Combining production downhole from different geologic formations on the same lease, unit PA, or CA is not considered commingling for production accounting purposes.

Communitized area (CA) means the area committed to a BLM approved communitization agreement.

Communitization agreement means an agreement to combine a lease or a portion of a lease that cannot otherwise be independently developed and operated in conformity with an established well spacing or well development program, with other tracts for purposes of cooperative development and operations.

Condition of Approval (COA) means a site-specific requirement included in the approval of an application that may limit or modify the specific actions covered by the application. Conditions of approval may minimize, mitigate, or prevent impacts to public lands or resources.

Days means consecutive calendar days, unless otherwise indicated.

Facility means:

(i) A site and associated equipment used to process, treat, store, or measure production from or allocated to a

Federal or Indian lease, unit, or CA that is located upstream of or at (and including) the approved point of royalty measurement; and

(ii) A site and associated equipment used to store, measure, or dispose of produced water that is located on a lease, unit, or CA.

Facility measurement point (FMP) means a BLM-approved point where oil or gas produced from a Federal or Indian lease, unit, or CA is measured and the measurement affects the calculation of the volume or quality of production on which royalty is owed. It includes, but is not limited to, the approved point of royalty measurement and measurement points relevant to determining the allocation of production to Federal or Indian leases, unit PAs, or CAs. However, allocation facilities that are part of a commingling and allocation approval under§ 3173.15 or that are part of a commingling and allocation approval approved after July 9, 2013, are not FMPs. An FMP also includes a meter or measurement facility used in the determination of the volume or quality of royalty-bearing oil or gas produced before BLM approval of an FMP under § 3173.12 of this part. An FMP must be located on the lease, unit, or CA unless the BLM approves measurement off the lease, unit, or CA. The BLM will not approve a gas processing plant tailgate meter located off the lease, unit, or CA, as an FMP.

Gas means any fluid, either combustible or noncombustible, hydrocarbon or non-hydrocarbon, that has neither independent shape nor volume, but tends to expand indefinitely and exists in a gaseous state under metered temperature and pressure conditions.

Incident of Noncompliance (INC) means documentation that identifies violations and notifies the recipient of the notice of required corrective actions or potential assessments of civil penalties.

Lease has the same meaning as defined in 43 CFR 3160.0–5.

Lessee has the same meaning as defined in 43 CFR 3160.0–5.

NIST traceable means an unbroken and documented chain of comparisons relating measurements from field or laboratory instruments to a known standard maintained by the National Institute of Standards and Technology (NIST).

Notice to lessees and operators (NTL) has the same meaning as defined in 43 CFR 3160.0–5.

Off-lease measurement means measurement at an FMP that is not located on the lease, unit, or CA from which the production came.

Oil means a mixture of hydrocarbons that exists in the liquid phase at the temperature and pressure at which it is measured. Condensate is considered to be oil for purposes of this part. Natural gas liquids extracted from a gas stream upstream of the approved point of royalty measurement are considered to be oil for purposes of this part.

(i) *Clean Oil or Pipeline Oil* means oil that is of such quality that it is acceptable to normal purchasers.

(ii) *Slop oil* means oil that is of such quality that it is not acceptable to normal purchasers and is usually sold to oil reclaimers. Oil that can be made acceptable to normal purchasers through special treatment that can be economically provided at the existing or modified facilities or using portable equipment at or upstream of the FMP is not slop oil.

(iii) *Waste oil* means oil that has been determined by the AO to be of such quality that it cannot be treated economically and put in a marketable condition with existing or modified lease facilities or portable equipment, cannot be sold to reclaimers, and has been determined by the AO to have no economic value.

Operator has the same meaning as defined in 43 CFR 3160.0–5.

Participating area (PA) has the same meaning as defined in 43 CFR 3180.0–5.

Point of royalty measurement means a BLM-approved FMP at which the volume and quality of oil or gas which is subject to royalty is measured. The point of royalty measurement is to be distinguished from meters that determine only the allocation of production to particular leases, unit PAs, CAs, or non-Federal and non-Indian properties. The point of royalty measurement is also known as the point of royalty settlement.

Production means oil or gas removed from a well bore and any products derived therefrom.

Production Measurement Team (PMT) means a panel of members from the BLM (which may include BLM-contracted experts) that reviews changes in industry measurement technology and standards to determine whether regulations should be updated and provides guidance on measurement technologies not addressed in current regulation. The purpose of the PMT is to act as a central advisory body to ensure that oil and gas produced from Federal and Indian leases is accurately measured and properly reported.

Purchaser means any person or entity who legally takes ownership of oil or gas in exchange for financial or other consideration.

Source record means any unedited and original record, document, or data that is used to determine volume and quality of production, regardless of format or how it was created or stored (*e.g.,* paper or electronic). It includes, but is not limited to, raw and unprocessed data (*e.g.,* instantaneous and continuous information used by flow computers to calculate volumes); gas charts; measurement tickets; calibration, verification, prover, and configuration reports; pumper and gauger field logs; volume statements; event logs; seal records; and gas analyses.

Statistically significant means the difference between two data sets that exceeds the threshold of significance.

Threshold of significance means the maximum difference between two data sets (a and b) that can be attributed to uncertainty effects. The threshold of significance is determined as follows:

$$T_s = \sqrt{U_a^2 + U_b^2}$$

where:

T_s = Threshold of significance, in percent

U_a = Uncertainty (95 percent confidence) of data set a, in percent

U_b = Uncertainty (95 percent confidence) of data set b, in percent

Total observed volume (TOV) means the total measured volume of all oil, sludges, sediment and water, and free water at the measured or observed temperature and pressure.

Transporter means any person or entity who legally moves or transports oil or gas from an FMP.

Uncertainty means the statistical range of error that can be expected between a measured value and the true value of what is being measured. Uncertainty is determined at a 95 percent confidence level for the purposes of this part.

Unit means the land within a unit area as defined in 43 CFR 3180.0–5.

Unit PA means the unit participating area, if one is in effect, the exploratory unit if there is no associated participating area, or an enhanced recovery unit.

Variance means an approved alternative to a provision or standard of a regulation, Onshore Oil and Gas Order, or NTL.

(b) As used in this part, the following additional acronyms apply:

API means American Petroleum Institute.

BLM means the Bureau of Land Management.

CMS means Coriolis Measurement System.

OGOR means Oil and Gas Operations Report (Form ONRR–4054 or any successor report).

ONRR means the Office of Natural Resources Revenue, U.S. Department of the Interior, and includes any successor agency.

WIS means Well Information System or any successor electronic system.

§ 3170.4 Prohibitions against by-pass and tampering.

(a) All by-passes are prohibited.

(b) Tampering with any measurement device, component of a measurement device, or measurement process is prohibited.

(c) Any by-pass or tampering with a measurement device, component of a measurement device, or measurement process may, together with any other remedies provided by law, result in an assessment of civil penalties for knowingly or willfully:

(1) Taking, removing, transporting, using, or diverting oil or gas from a lease site without valid legal authority under 30 U.S.C. 1719(d)(2) and 43 CFR. 3163.2(f)(2); or

(2) Preparing, maintaining, or submitting false, inaccurate, or misleading reports, records, or information under 30 U.S.C. 1719(d)(1) and 43 CFR 3163.2(f)(1).

§ 3170.5 [Reserved]

§ 3170.6 Variances.

(a) Any party subject to a requirement of a regulation in this part may request a variance from that requirement.

(1) A request for a variance must include the following:

(i) Identification of the specific requirement from which the variance is requested;

(ii) Identification of the length of time for which the variance is requested, if applicable;

(iii) An explanation of the need for the variance;

(iv) A detailed description of the proposed alternative;

(v) A showing that the proposed alternative will produce a result that meets or exceeds the objectives of the applicable requirement for which the variance is requested; and

(vi) The FMP number(s) for which the variance is requested, if applicable.

(2) A request for a variance must be submitted as a separate document from any plans or applications. A request for a variance that is submitted as part of a master development plan, application for permit to drill, right-of-way application, or applications for approval of other types of operations rather than submitted separately will not be considered. Approval of a plan or application that contains a request for a variance does not constitute approval of the variance. This paragraph does not prohibit submitting a separate request for a variance simultaneously with a plan or application.

For plans or applications that are contingent upon the approval of the variance request, we encourage the simultaneous submission of the request for variance and the plan or application.

(3) The party requesting the variance must submit the request and any supporting documents to the BLM Field Office having jurisdiction over the lands described in the application. The operator should file the request using the BLM's electronic system. If electronic filing is not possible or practical, the operator may submit a request for variance on the Form 3160–5, Sundry Notices and Reports on Wells (Sundry Notice) to the BLM Field Office having jurisdiction.

(4) The AO, after considering all relevant factors, may approve the variance, or approve it with COAs, only if the AO determines that:

(i) The proposed alternative meets or exceeds the objectives of the applicable requirement(s) of the regulation;

(ii) Approving the variance will not adversely affect royalty income and production accountability; and

(iii) Issuing the variance is consistent with maximum ultimate economic recovery as defined in 43 CFR 3160.0–5.

(5) The decision whether to grant or deny the variance request is entirely within the BLM's discretion.

(6) A variance from the requirements of a regulation in this part does not constitute a variance to provisions of other regulations, including Onshore Oil and Gas Orders.

(b) The BLM reserves the right to rescind a variance or modify any COA of a variance due to changes in Federal law, technology, regulation, BLM policy, field operations, noncompliance, or other reasons. The BLM will provide a written justification if it rescinds a variance or modifies a COA.

§ 3170.7 Required recordkeeping, records retention, and records submission.

(a) Lessees, operators, purchasers, transporters, and any other person directly involved in producing, transporting, purchasing, selling, or measuring oil or gas through the point of royalty measurement or the point of first sale, whichever is later, must retain all records, including source records, that are relevant to determining the quality, quantity, disposition, and verification of production attributable to Federal or Indian leases for the periods prescribed in paragraphs (c) through (e) of this section.

(b) This retention requirement applies to records generated during or for the period for which the lessee or operator has an interest in or conducted operations on the lease, or in which a person is involved in transporting, purchasing, or selling production from the lease.

(c)(1) For Federal leases, and units or CAs that include Federal leases but do not include Indian leases, the record holder must maintain records for 7 years after the records are generated.

(2) If a judicial proceeding or demand involving such records is timely commenced, the record holder must maintain such records until the final nonappealable decision in such judicial proceeding is made, or with respect to that demand is rendered, unless the Secretary or his designee or the applicable delegated State authorizes in writing an earlier release of the requirement to maintain such records.

(d)(1) For Indian leases, and units or CAs that include Indian leases but do not include Federal leases, the record holder must maintain records for 6 years after the records are generated.

(2) If the Secretary or his designee notifies the record holder that the Department of the Interior has initiated or is participating in an audit or investigation involving such records, the record holder must maintain such records until the Secretary or his designee releases the record holder from the obligation to maintain the records.

(e)(1) For units and CAs that include both Federal and Indian leases, if the Secretary or his designee has notified the record holder within 6 years after the records are generated that an audit or investigation involving such records has been initiated, but a judicial proceeding or demand is not commenced within 7 years after the records are generated, the record holder must retain all records regarding production from the unit or CA until the Secretary or his designee releases the record holder from the obligation to maintain the records.

(2) If a judicial proceeding or demand is commenced within 7 years after the records are generated, the record holder must retain all records regarding production from the unit or CA until the final nonappealable decision in such judicial proceeding is made, or with respect to that demand is rendered, or until the Secretary or his designee releases the record holder from the obligation to maintain the records, whichever is later, unless the Secretary or his designee authorizes in writing a release of the requirement to maintain

such records before a final nonappealable decision is made or rendered.

(f) The lessee, operator, purchaser, and transporter must maintain an audit trail.

(g) All records, including source records that are used to determine quality, quantity, disposition and verification of production attributable to a Federal or Indian lease, unit PA, or CA, must include the FMP number and the name of the company that created the record. For existing measurement facilities, in the interim period before the assignment of an FMP number, all records must include the following information:

(1) The name of the operator;

(2) The lease, unit PA, or communitization agreement number; and

(3) The well or facility name and number.

(h) Upon request of the AO, the operator, purchaser, or transporter must provide such records to the AO as may be required by regulation, written order, Onshore Order, NTL, or COA.

(i) All records must be legible.

(j) All records requiring a signature must also have the signer's printed name.

§ 3170.8 Appeal procedures.

BLM decisions, orders, assessments, or other actions under the regulations in this part are administratively appealable under the procedures prescribed in 43 CFR 3165.3(b), 3165.4, and part 4.

§ 3170.9 Enforcement.

Noncompliance with any of the requirements of this part or any order issued under this part may result in enforcement actions under 43 CFR subpart 3163 or any other remedy available under applicable law or regulation.

Subpart 3171—[Reserved]

Subpart 3172—[Reserved]

Subpart 3173—Requirements for Site Security and Production Handling

§ 3173.1 Definitions and acronyms.

(a) As used in this subpart, the term:

Access means the ability to:

(i) Add liquids to or remove liquids from, any tank or piping system, through a valve or combination of valves or by moving liquids from one tank to another tank; or

(ii) Enter any component in a measuring system affecting the accuracy of the measurement of the quality or quantity of the liquid being measured.

Appropriate valves means those valves that must be sealed during the production or sales phase (*e.g.,* fill lines, equalizer, overflow lines, sales lines, circulating lines, or drain lines).

Authorized representative (AR) has the same meaning as defined in 43 CFR 3160.0–5.

Business day means any day Monday through Friday, excluding Federal holidays.

Effectively sealed means the placement of a seal in such a manner that the sealed component cannot be accessed, moved, or altered without the seal being broken.

Land description means the geographical coordinates referenced to the National Spatial Reference System, North American Datum 1983 or latest edition, in feet and direction from the nearest two adjacent section lines, or, if not within the Rectangular Survey System, the nearest two adjacent property lines, generated from the BLM's current Geographic Coordinate database (Public Land Survey System).

Low-volume property means a lease, unit PA, or CA that does not produce sufficient volumes for the operator to realize from continued production a sufficient rate of return on the investment required to achieve non-commingled measurement of volumes produced from that lease, unit PA, or CA, such that a prudent operator would opt to plug a well or shut-in the lease, unit PA, or CA if the commingling request were not approved. The volumes produced from a lease, unit PA, or CA include all volumes produced and are not limited to volumes allocated to Federal leases or the Federal interest. In the absence of information demonstrating a different rate, a rate of return less than 10 percent (before Federal, State, and local taxes) will be regarded as not sufficient. A lease, unit PA, or CA may also be regarded as a low-volume property if the operator demonstrates that the cost of the capital expenditures required to achieve measurement of non-commingled production from that property is more than the net present value (NPV) of the projected royalty from continued production from the lease, CA, or unit PA over the life of the equipment.

Maximum ultimate economic recovery has the same meaning as defined in 43 CFR 3160.0–5.

Mishandling means unmeasured or unaccounted-for removal of production from a facility.

Piping means a tubular system (*e.g.,* metallic, plastic, fiberglass, or rubber) used to move fluids (liquids and gases).

Production phase means that event during which oil is delivered directly to or through production equipment to the storage facilities and includes all operations at the facility other than those defined by the sales phase.

Sales phase means that event during which oil is removed from storage facilities for sale at an FMP.

Seal means a uniquely numbered device which completely secures either a valve or those components of a measuring system that affect the quality or quantity of the oil being measured.

(b) As used in this subpart, the following additional acronyms apply:

BMPs means Best Management Practices.

Btu means British thermal unit.

CAA means commingling and allocation approval.

§ 3173.2 Storage and sales facilities—seals.

(a) All lines entering or leaving any oil storage tank must have valves capable of being effectively sealed during the production and sales phases unless otherwise provided under this subpart. During the production phase, all appropriate valves that allow unmeasured production to be removed from storage must be effectively sealed in the closed position. During any other phase (sales, water drain, hot oiling), and prior to taking the top tank gauge measurement, all appropriate valves that allow unmeasured production to enter or leave the sales tank must be effectively sealed in the closed position (see Appendix to Subpart 3173). Each unsealed or ineffectively sealed appropriate valve is a separate violation.

(b) Valves or combinations of valves and tanks that provide access to the production before it is measured for sales are considered appropriate valves and are subject to the seal requirements of this subpart (see Appendix to 3173). If there is more than one valve on a line from a tank, the valve closest to the tank must be sealed. All appropriate valves must be in an operable condition and accurately reflect whether the valve is open or closed.

(c) The following are not considered appropriate valves and are not subject to the sealing requirements of this subpart:

(1) Valves on production equipment (*e.g.,* separator, dehydrator, gun barrel, or wash tank);

(2) Valves on water tanks, provided that the possibility of access to production in the sales and storage tanks does not exist through a common circulating, drain, overflow, or equalizer system;

(3) Valves on tanks that contain oil that has been determined by the AO or AR to be waste or slop oil;

(4) Sample cock valves used on piping or tanks with a Nominal Pipe Size of 1 inch or less in diameter;

(5) When a single tank with a nominal capacity of 500 barrels (bbl) or less is used for collecting marginal production of oil produced from a single well (*i.e.,* production that is less than 3 bbl per day), the requirement for the fill-line valve to be sealed during shipment is waived, but all other seal requirements of this subpart apply;

(6) Gas line valves used on piping with a Nominal Pipe Size of 1 inch or less used as tank bottom ''roll'' lines are not required to be sealed, provided there is no access to the contents of the storage tank and the roll lines cannot be used as equalizer lines;

(7) Valves on tank heating systems which use a fluid other than the contents of the storage tank (*i.e.,* steam, water, or glycol);

(8) Valves used on piping with a Nominal Pipe Size of 1 inch or less connected directly to the pump body or used on pump bleed off lines;

(9) Tank vent-line valves; and

(10) Sales, equalizer, or fill-line valves on systems where production may be removed only through approved oil metering systems (*e.g.,* lease automatic custody transfer and CMS). However, any valve which allows access for removing oil before it is measured through the metering system must be effectively sealed (see Appendix to 3173).

(d) Tampering with any appropriate valve is prohibited. Tampering with an appropriate valve may result in an assessment of civil penalties for knowingly or willfully preparing, maintaining, or submitting false, inaccurate, or misleading reports, records, or written information under 30 U.S.C. 1719(d)(1) and 43 CFR 3163.2(f)(1), or knowingly or willfully taking, removing, transporting, using, or diverting oil or gas from a lease site without valid legal authority under 30 U.S.C. 1719(d)(2) and 43 CFR 3163.2(f)(2), together with any other remedies provided by law.

§ 3173.3 Oil measurement system components—seals.

(a) Components used for quantity or quality determination of oil must be effectively sealed to indicate tampering, including, but not limited to, the following components (see §§ 3174.8(a) (lease automatic custody transfer meters) and 3174.9(d) (Coriolis measurement systems) of this part):

(1) Sample probe;

(2) Sampler volume control;

(3) All valves on lines entering or leaving the sample container, excluding the safety pop-off valve (if so equipped). Each valve must be sealed in the open or closed position, as appropriate;

(4) Meter assembly, including the counter head and meter head;

(5) Temperature averager/flow computer;

(6) Back pressure valve downstream of the meter;

(7) Any drain valves in the system;

(8) Manual sampling valves (if so equipped);

(9) Valves on diverter lines larger than 1″ in nominal diameter;

(10) Right-angle drive;

(11) Totalizer; and

(12) Prover connections.

(b) Each missing or ineffectively sealed component is a separate violation.

§ 3173.4 Federal seals.

(a) In addition to any INC issued for a seal violation, the AO or AR may place one or more Federal seals on any appropriate valve, sealing device, or oil metering system component that does not comply with the requirements in §§ 3173.2 and 3173.3 of this subpart if the operator is not present, refuses to cooperate with the AO or AR, or is unable to correct the noncompliance.

(b) The placement of a Federal seal does not constitute compliance with the requirements of §§ 3173.2 and 3173.3 of this subpart.

(c) A Federal seal may not be removed without the approval of the AO or AR.

§ 3173.5 Removing production from tanks for sale and transportation by truck.

(a) When a single truck load constitutes a completed sale, the driver must possess documentation containing the information required in § 3174.12 of this part.

(b) When multiple truckloads are involved in a sale and the oil measurement method is based on the difference between the opening and closing gauges, the driver of the last truck must possess the documentation containing the information required in § 3174.12 of this part. All other drivers involved in the sale must possess a trip log or manifest.

(c) After the seals have been broken, the purchaser or transporter is responsible for the entire contents of the tank until it is resealed.

§ 3173.6 Water-draining operations.

When water is drained from a production storage tank, the operator, purchaser, or transporter, as appropriate, must document the following information:

(a) Federal or Indian lease, unit PA, or CA number(s);

(b) FMP number associated with the tank;

(c) The tank location by land description;

(d) The unique tank number and nominal capacity;

(e) Date and time for opening gauge;

(f) Opening gauge and color cut measurements;

(g) Name of the person and company draining the tank;

(h) Unique identifying number of each seal removed;

(i) Time of the closing gauge;

(j) Closing gauge measurement; and

(k) Unique identifying number of each seal installed.

§ 3173.7 Hot oiling, clean-up, and completion operations.

(a) During hot oil, clean-up, or completion operations, or any other situation where the operator removes oil from storage, temporarily uses it for operational purposes, and then returns it to storage on the same lease, unit PA, or CA, the operator must document the following information:

(1) Federal or Indian lease, unit PA, or communitization agreement number(s);

(2) FMP number associated with the tank or group of tanks;

(3) The tank location by land description;

(4) The unique tank number and nominal capacity;

(5) Date and time of the opening gauge;

(6) Opening gauge measurement;

(7) Name of the person and company removing production from the tank;

(8) Unique identifying number of each seal removed;

(9) Time of the closing gauge;

(10) Closing gauge measurement;

(11) Unique identifying number of each seal installed;

(12) How the oil was used; and

(13) Where the oil was used (*i.e.,* well or facility name and number).

(b) During hot oiling, line flushing, or completion operations or any other situation where the operator removes production from storage for use on a different lease, unit PA, or CA, the production is considered sold and must be measured in accordance with the applicable requirements of this subpart and reported as sold to ONRR on the OGOR (30 CFR part 1210 subpart C).

§ 3173.8 Report of theft or mishandling of production.

(a) No later than the next business day after discovery of an incident of apparent theft or mishandling of production, the operator, purchaser, or transporter must report the incident to

the AO. All oral reports must be followed up with a written incident report within 10 business days of the oral report.

(b) The incident report must include the following information:

(1) Company name and name of the person reporting the incident;

(2) Lease, unit PA, or communitization agreement number, well or facility name and number, and FMP number, as appropriate;

(3) Land description of the facility location where the incident occurred;

(4) The estimated volume of production removed;

(5) The manner in which access was obtained to the production or how the mishandling occurred;

(6) The name of the person who discovered the incident; and

(7) The date and time of the discovery of the incident.

§ 3173.9 Required recordkeeping for inventory and seal records.

(a) At the end of each calendar month, the operator must measure and record an inventory consisting of TOV in storage;

(b) For each seal, the operator must maintain a record that includes:

(1) The unique identifying number of each seal and the valve or meter component on which the seal is or was used;

(2) The date of installation or removal of each seal;

(3) For valves, the position (open or closed) in which it was sealed; and

(4) The reason the seal was removed.

§ 3173.10 Form 3160–5, Sundry Notices and Reports on Wells.

(a) The operator must submit a Form 3160–5, Sundry Notices and Reports on Wells (Sundry Notice) for the following:

(1) Site facility diagrams (see § 3173.11 of this subpart);

(2) Request for an FMP number (see § 3173.12 of this subpart);

(3) Request for FMP amendments (see § 3173.13 of this subpart);

(4) Requests for approval of off-lease measurement (see § 3173.23 of this subpart);

(5) Request to amend an approval of off-lease measurement (see § 3173.23(k) of this subpart);

(6) Requests for approval of proposed CAAs (see § 3173.15 of this subpart); and

(7) Request to modify a CAA (see § 3173.18 of this subpart).

(b) The operator must submit all Sundry Notices electronically to the BLM office having jurisdiction over the lease, unit, or CA using the BLM's WIS, or other electronic system the BLM designates, unless the submitter:

(1) Is a small business, as defined by the U.S. Small Business Administration; and

(2) Does not have access to the Internet.

§ 3173.11 Site facility diagram.

(a) A site facility diagram is required for all facilities.

(b) Except for the requirement to submit a Form 3160–5 with the site facility diagram, no format is prescribed for site facility diagrams. The diagram should be formatted to fit on an 8½ × 11 sheet of paper, if possible, and must be legible and comprehensible to an individual with an ordinary working knowledge of oil field operations (See Appendix to 3173). If more than one page is required, each page must be numbered (in the format ''N of X pages'').

(c) The diagram must:

(1) Be submitted within 30 days of completion of construction of a new facility, when existing facilities are modified, or when a non-Federal facility located on a Federal lease or federally approved unit or CA is constructed or modified;

(2) Reflect the position of the production and water recovery equipment, piping for oil, gas, and water, and metering or other measuring systems in relation to each other, but need not be to scale;

(3) Commencing with the header, identify all of the equipment, including, but not limited to, the header, wellhead, piping, tanks, and metering systems located on the site, and include the appropriate valves and any other equipment used in the handling, conditioning, or disposal of production and water, and indicate the direction of flow;

(4) Identify by API number the wells flowing into headers;

(5) If another operator operates a co-located facility, depict the co-located facilities on the diagram or list them as an attachment and identify them by company name, facility name(s), lease, unit PA, or communitization agreement number, and FMP number(s);

(6) Indicate which valve(s) must be sealed and in what position during the production and sales phases and during the conduct of other production activities (*e.g.,* circulating tanks or drawing off water), which may be shown by an attachment, if necessary;

(7) When describing co-located facilities operated by one operator, include a skeleton diagram of the co-located facility, showing equipment only. For storage facilities common to co-located facilities operated by one operator, one diagram is sufficient;

(8) Clearly identify the lease, unit PA, or CA to which the diagram applies and the land description of the facility, and the name of the company submitting the diagram, with co-located facilities being identified for each lease, unit PA, or CA;

(9) Clearly identify on the diagram, or an attachment, all meters and measurement equipment. Specifically identify all approved and assigned FMPs.

(10) If the operator claims royalty-free use, clearly identify on the diagram or as an attachment, the equipment for which the operator claims royalty-free use. The operator must either:

(i) For each engine, motor, or major component (*e.g.,* compressor, separator, dehydrator, heater-treater, or tank heater) powered by production from the lease, unit, or CA, state the volume (oil or gas) consumed per day and per month, how the volume is determined, the equipment manufacturer's name, rated use, and equipment serial number; or

(ii) Measure the volume used by meter or tank gauge.

(11) Each diagram must contain a signature block certifying ''I (print company representative's name) representing (print company name) certify the accuracy and completeness of the information contained within this site facility diagram. (signature of company representative) on (date signed) (printed name of company representative).'' The person certifying must have the authority to act on behalf of the operator or lessee and possess knowledge of the accuracy and completeness of the information presented in the diagram.

(d) For a facility in service before [EFFECTIVE DATE OF THE FINAL RULE], the operator must submit a new site facility diagram that complies with this section within 30 days after the BLM assigns an FMP number under § 3173.12 of this subpart; and

(e) For facilities in service before [EFFECTIVE DATE OF THE FINAL RULE], for which the BLM will not assign an FMP number under § 3173.12 of this subpart (*e.g.*, facilities that dispose of produced water), the operator must submit a new site facility diagram by [DATE 60 DAYS AFTER THE EFFECTIVE DATE OF THE FINAL RULE].

§ 3173.12 Applying for a facility measurement point.

(a)(1) Unless otherwise approved, the FMP(s) for all Federal and Indian leases, unit PAs, or CAs must be located within the boundaries of the lease, unit, or CA from which the production originated

and must measure only production from that lease, unit PA, or CA.

(2) Off-lease measurement, commingling, or allocation of Federal or Indian production requires prior approval (see 43 CFR 3162.7–2, 3162.7–3, 3173.15, 3173.16, 3173.23, and 3173.24).

(b) The BLM will not approve a gas processing plant tailgate meter located off the lease, unit, or CA as an FMP.

(c) The operator must separately apply for approval of separate FMP numbers for an FMP that measures oil produced from a lease, unit PA, CA, or CAA and an FMP that measures gas produced from the same lease, unit PA, CA, or CAA, even if the measurement equipment or facilities are at the same location.

(d) For a measurement facility that comes into service after [EFFECTIVE DATE OF THE FINAL RULE], the operator must obtain BLM approval for the FMP before any production leaves the facility.

(e) For a measurement facility in service on or before [EFFECTIVE DATE OF THE FINAL RULE], the operator must apply for BLM approval of an FMP within the time prescribed in this paragraph, based on the production level of the lease, unit PA, CA, or CAA that the facility serves. The required time to apply for approval of an FMP applies to both oil and gas measurement facilities measuring production from that lease, unit PA, CA, or CAA.

(1) For a stand-alone lease, unit PA, CA, or CAA that produces 6,000 Mcf or more of gas per month or 40 barrels or more of oil per month, by [DATE 9 MONTHS AFTER THE EFFECTIVE DATE OF THE FINAL RULE].

(2) For a stand-alone lease, unit PA, CA, or CAA that produces 3,000 Mcf or more but less than 6,000 Mcf of gas per month or 20 barrels or more but less than 40 barrels of oil per month, by [DATE 18 MONTHS AFTER THE EFFECTIVE DATE OF THE FINAL RULE].

(3) For a stand-alone lease, unit PA, CA, or CAA that produces less than 3,000 Mcf of gas per month and less than 20 barrels of oil per month, [DATE 27 MONTHS AFTER THE EFFECTIVE DATE OF THE FINAL RULE].

(4) Calculate the production levels prescribed in paragraphs (e)(1) through (3) of this section as an average over the 12 months preceding the effective date of this section or the period the lease, unit PA, CA, or CAA has been in production, whichever is shorter.

(5) If the operator applies for an FMP approval by the date required under this paragraph, the operator may continue to use the existing measurement points until the BLM acts on the application.

(6) If the operator fails to apply for an FMP approval by the date required under this paragraph, the operator will be subject to an incident of noncompliance and assessment of civil penalty under 43 CFR subpart 3163, together with any other remedy available under applicable law or regulation.

(f) All requests for FMP approval must include the following:

(1) A complete Sundry Notice for approval of the FMP;

(2) The applicable Measurement Type Code specified in WIS;

(3) For gas and oil, a list of the measurement component names and the manufacturer, model, and serial number of each component. For example:

(i) ''Gas measurement,'' electronic flow computer—manufacturer, model, serial number; primary element (holder, *e.g.*, senior fitting)—manufacturer, serial number, size; transducer (static, differential and temperature)—manufacturer, model, serial number, upper range limit; temperature chart recorder—model, serial number, etc.;

(ii) ''Oil measurement by tank gauge,'' oil tank—tank number and/or serial number (there may be more than one tank associated with an FMP); and

(iii) ''Oil measurement by LACT,'' totalizer—model, serial number, temperature averager—model, serial number, etc.

(iv) ''Oil measurement by CMS,'' Coriolis meter—manufacturer, model, size serial number; transducer (pressure and temperature)—manufacturer, model, upper range limit; tertiary device, manufacturer, model.

(4) For gas, the gas sampling method (*i.e.*, spot, composite, or on-line gas chromatograph);

(5) Where production from more than one well will flow to the requested FMP, list the API well numbers associated with the FMP.

(g) FMP approval may be requested concurrently with requests for off-lease measurement or commingling and allocation approval.

(h) If the FMP request is approved, the BLM will assign an FMP number.

§ 3173.13 Requirements for approved facility measurement points.

(a) Within 30 days after BLM approval, the operator must stamp or stencil the FMP number on a fixed plate:

(1) For gas, either on the meter run or meter house, and, as required in 43 CFR 3175.101(b)(4)(i), on the flow computer display; and

(2) For oil measured by:

(i) LACT, on the non-resettable totalizer;

(ii) CMS, on the Coriolis meter and on the display of the tertiary device; or

(iii) Tank, on the pipeline, tank, or valve closest to the tank where the connection for removal or delivery is made.

(b) The operator must maintain the stamped or stenciled FMP number in a legible condition. The FMP number must be clearly visible to any person at or approaching the FMP and clearly identified with each FMP;

(c) Beginning on the first day of the month after the FMP number is assigned, the operator must use the FMP number in recordkeeping, as required by this subpart;

(d)(1) The operator must file a Sundry Notice that details any modifications to the FMP within 20 business days after the change.

(2) These details include, but are not limited to, the old and new meter manufacturer, serial number(s), owner's name, tank number(s), and wells or facilities using the FMP.

(3) The Sundry Notice must specify what was changed, why the change was made, the effective date, and include, if appropriate, an amended site facility diagram (see § 3173.11 of this subpart).

§ 3173.14 Conditions for commingling and allocation approval (surface and downhole).

(a) With the exceptions stated in paragraph (b) of this section, the BLM will grant a CAA only if:

(1) The proposed commingling includes production from only:

(i) Federal leases, unit PAs, or CAs with 100 percent Federal mineral ownership and the same fixed royalty rate and revenue distribution; or

(ii) Indian tribal leases, unit PAs, or CAs wholly owned by the same tribe and with the same fixed royalty rate;

(2) There is a signed agreement prescribing an allocation method among the properties whose production is to be commingled (including a method for allocating produced water);

(3) For each of the leases, unit PAs, or CAs proposed for inclusion in the CAA, the applicant demonstrates to the AO that a lease, unit PA, or CA proposed for inclusion is producing in paying quantities (or, in the case of Federal leases, capable of production in paying quantities) pending approval of the CAA; and

(4) The FMP(s) for the proposed CAA measure production originating only from the leases, unit PAs, or CAs in the CAA.

(b) The BLM will consider proposed commingling of production from Federal or Indian leases, unit PAs, or

CAs with less than 100 percent Federal or same Indian tribal ownership, or proposed commingling of production from one or more Federal or Indian leases, unit PAs, or CAs with production from State or private properties, only if the proposed commingling meets the conditions of subparagraphs (a)(2) through (4) of this section and if:

(1) The Federal or Indian lease, unit PA, or CA meets the definition of a low-volume property; or

(2) There are overriding considerations which indicate that the BLM should approve a commingling application notwithstanding potential negative royalty impacts from commingled measurement. Such considerations could include topographic or other environmental considerations that make non-commingled measurement physically impractical or undesirable, in view of where additional measurement and related equipment necessary to achieve non-commingled measurement would have to be located; and

(3) In either case, the AO determines that the requested CAA is in the public interest, taking into account relevant environmental considerations and the BLM's ability to verify and account for the production proposed to be commingled.

§ 3173.15 Applying for a commingling and allocation approval.

To apply for a CAA, the operator(s) must submit the following information, if applicable, to the BLM office having jurisdiction over the leases, unit PAs, or CAs whose production is proposed to be commingled:

(a) A completed Sundry Notice for approval of:

(1) Commingling and allocation; and

(2) Off-lease measurement under § 3173.23 of this subpart, if any of the proposed FMPs are outside the boundaries of any of the leases, units, or CAs whose production would be commingled (which may be included in the same Sundry Notice as the request for approval of commingling and allocation);

(b) A proposed allocation agreement and a proposed allocation schedule (including allocation of produced water) signed by each operator of each of the leases, unit PAs, or CAs whose production would be included in the CAA;

(c) A list of all Federal or Indian lease, unit PA, or communitization agreement numbers in the proposed CAA, specifying the type of production (*i.e.,* oil, gas, or both) for which commingling is requested;

(d) A map or maps showing the following:

(1) The boundaries of all the leases, units, unit PAs, or CAs whose production is proposed to be commingled;

(2) The proposed location by land description for the FMP used to measure the commingled production; and

(3) A map or diagram of existing or planned facilities that shows the location of all wellheads, production facilities, flow lines (including water flow lines), and FMPs existing or proposed to be installed to the extent known or anticipated;

(e) For existing facilities, site facility diagrams clearly showing any proposed change to current site facility diagrams (see § 3173.11 of this subpart);

(f) A schematic or engineering drawing for all new proposed facilities (including water handling facilities) showing the relative location of pipes, tanks, meters, separators, dehydrators, compressors, and other equipment;

(g) If new surface disturbance is proposed on one or more of the leases, units, or CAs and the surface is BLM-managed land, a request to the AO for approval of the proposed surface disturbance (by Sundry Notice if the affected land is leased, or in an application for right-of-way if the affected land is unleased land within a CA or unit);

(h) If new surface disturbance is proposed on BLM-managed land outside any of the leases, units, or CAs whose production would be commingled, a right-of-way grant application, under 43 CFR part 2880 if the FMP is on a pipeline, or under 43 CFR part 2800, if the FMP is a storage tank;

(i) If new surface disturbance is proposed on Federal land managed by an agency other than the BLM, written approval from the appropriate surface-management agency;

(j) Documentation demonstrating that each of the leases, unit PAs, or CAs proposed for inclusion in the CAA is producing in paying quantities (or, in the case of Federal leases, is capable of production in paying quantities) pending approval of the CAA; and

(k) All gas analyses, including Btu content (if the CAA request includes gas) and all oil gravities (if the CAA request includes oil) for previous periods of production from the leases, units, unit PAs, or CAs proposed for inclusion in the CAA, up to 6 years before the date of the application for approval of the CAA.

§ 3173.16 Existing commingling and allocation approvals.

(a) Upon receipt of an operator's request for assignment of an FMP number to a facility associated with a CAA existing on the effective date of this subpart, the AO will review the existing CAA for consistency with the minimum standards and requirements for a CAA under § 3173.14 of this subpart. The AO will notify the operator in writing of any inconsistencies or deficiencies.

(b) The operator must correct any inconsistencies or deficiencies that the AO identifies, or provide additional information, within 20 business days of receipt of the AO's notice.

(c) The AO may impose new or amended COAs on an existing commingling approval to make the approval consistent with the requirements for a CAA under § 3173.14 of this subpart in connection with approving the requested FMP. If the operator appeals one of more of the new COAs, the existing FMP approval will continue in effect during the pendency of the appeal.

(d) If the existing commingling approval does not meet the standards and requirements of § 3173.14 of this subpart and the operator does not correct the deficiencies, the AO may terminate the existing commingling approval under § 3173.20 of this subpart and deny the request for an FMP number for the facility associated with the existing commingling approval.

(e) If the BLM approves a new CAA to replace an existing CAA, the new CAA is effective on the first day of the month following its approval.

§ 3173.17 Relationship of a commingling and allocation approval to royalty-free use of production.

A CAA does not constitute approval of off-lease royalty-free use of production as fuel in facilities located at an FMP approved under the CAA. The operator may seek such approval under applicable rules.

§ 3173.18 Modification of a commingling and allocation approval.

(a) At the request of all the operators who are a party to a CAA, the CAA may be modified when:

(1) There is a change in the allocation schedule (including allocation of produced water) resulting from a change in relative production from wells subject to the CAA or addition or elimination of a well from the CAA;

(2) Additional leases, unit PAs, or CAs are proposed for inclusion in the CAA;

(3) A lease, unit PA, or communitization agreement within the

CAA terminates, or a unit PA within the CAA ceases production; or

(4) There is a change in operator.

(b) To request a modification of a CAA, all operators must submit to the AO:

(1) A completed Sundry Notice describing the modification requested;

(2) A new allocation schedule, if appropriate; and

(3) Certification by each operator that it agrees to the CAA modification.

§ 3173.19 Effective date of a commingling and allocation approval.

(a) If the BLM approves a commingling application, the effective date is the first day of the month following first production through the FMP(s) for the CAA.

(b) If the BLM approves a modification, the effective date is the first day of the month following approval of the modification.

(c) A CAA does not modify any of the terms of the leases, units, or communitization agreements covered by the CAA.

§ 3173.20 Terminating a commingling and allocation approval.

(a) Any operator who is party to a CAA may unilaterally terminate the CAA by submitting a Sundry Notice to the BLM. The Sundry Notice must identify the new FMP(s) for the lease(s), unit PA(s), or CA(s) operated by that operator.

(b) The BLM may terminate the CAA for any reason, including, but not limited to, the following:

(1) Changes in technology, regulation, or BLM policy;

(2) Non-compliance with the terms or COAs of the CAA or this subpart; or

(3) The BLM determines that a lease, unit, or communitization agreement subject to the CAA has terminated, or a unit PA subject to the CAA has ceased production.

(c) If only one lease, unit PA, or CA remains subject to the CAA, the CAA terminates automatically.

(d) The BLM will notify in writing all operators who are a party to the CAA of the CAA termination, the reason for the termination, and the effective date of the termination.

(e) If a CAA is terminated, each lease, unit PA, or CA that was included in the CAA will revert to separate measurement. The separate measurement must be on the lease, unit, or CA unless off-lease measurement is approved.

§ 3173.21 Combining production downhole in certain circumstances.

(a)(1) Combining production from a single well (*e.g.*, a directional well) drilled into different hydrocarbon pools or geologic formations underlying separate adjacent properties (whether Federal, Indian, State, or private), where none of the hydrocarbon pools or geologic formations underlie or are common to more than one of the respective properties, constitutes commingling for purposes of §§ 3173.14 through 3173.20.

(2) If any of the hydrocarbon pools or geologic formations underlie or are common to more than one of the properties, the operator must establish a unit PA (see 43 CFR part 3180) or communitization agreement (see 43 CFR 3105.2–1–3105.2–3), as applicable, rather than applying for a CAA.

(b) Combining production downhole from different geologic formations on the same lease from a single well requires approval of the AO (see 43 CFR 3162.3–2), but it is not considered commingling for production accounting purposes, unless the respective geologic formations have different ownership.

§ 3173.22 Requirements for off-lease measurement.

Off-lease measurement must:

(a) Involve only production from a single lease, unit PA, or CA or from a single CAA;

(b) Provide for accurate production accountability;

(c) Be in the public interest (considering factors including, but not limited to, BMPs and maximum ultimate economic recovery); and

(d) Occur at an approved FMP. A request for approval of an FMP (see § 3173.13 of this subpart) may be filed concurrently with the request for off-lease measurement.

§ 3173.23 Applying for off-lease measurement.

To apply for approval of off-lease measurement, the operator must submit the following to the BLM office having jurisdiction over the leases, units, or CAs:

(a) A completed Sundry Notice. The Sundry Notice should include a request for a CAA if the proposed off-lease measurement is associated with a proposed CAA (see § 3173.15 of this subpart);

(b) Justification for off-lease measurement (*e.g.*, necessary for economic or physical accessibility reasons, or BMPs);

(c) A topographic map of appropriate scale showing the following:

(1) The boundary of the lease(s), unit(s), or CA(s) from which the production originates;

(2) The location by land description of all wells, pipelines, facilities, and FMPs associated with the proposal, with equipment identified as existing or proposed; and

(3) The surface ownership of all land on which equipment is, or is proposed to be, located.

(d) A schematic or engineering drawing for all new proposed facilities showing the relative location of pipes, tanks, meters, separators, dehydrators, compressors, and other equipment;

(e) For existing facilities, site facility diagrams clearly showing any proposed change to current site facility diagrams (see § 3173.11 of this subpart);

(f) If any of the proposed off-lease measurement facilities are located on non-federally owned surface, a written concurrence signed by the owner(s) of the surface and the owner(s) of the measurement facilities, including each owner(s)' name, address, and telephone number, granting the BLM unrestricted access to the off-lease measurement facility and the surface on which it is located, for the purpose of inspecting any production, measurement, water handling, or transportation equipment located on the non-Federal surface up to and including the FMP, and for otherwise verifying production accountability. If the ownership of the non-Federal surface or of the measurement facility changes, the operator must obtain and provide to the AO the written concurrence required under this paragraph from the new owner(s);

(g) A right-of-way grant application, filed under 43 CFR part 2880 if the proposed off-lease FMP is on a pipeline, or under 43 CFR part 2800 if the proposed off-lease FMP is a storage tank;

(h) A right-of-way grant application, filed under 25 CFR part 169, if any of the proposed surface facilities are on Indian land outside the lease, unit, or CA from which the production originated;

(i) An application for approval of off-lease royalty-free use under applicable rules, if the operator proposes to use production from the lease, unit, or CA as fuel at the off-lease measurement facility without payment of royalty; and

(j) A statement that indicates whether the proposal includes all, or only a portion of, the production from the lease, unit, or CA. (For example, gas, but not oil, could be proposed for off-lease measurement.) If the proposal includes only a portion of the production, identify the FMP(s) where the remainder of the production from the lease, unit, or CA is measured or is proposed to be measured.

(k) To apply for an amendment of an existing approval of off-lease

measurement, the operator must submit a completed Sundry Notice required under paragraph (a) of this section, and information required under paragraphs (b) through (j) of this section to the extent the information previously submitted has changed.

§ 3173.24 Effective date of an off-lease measurement approval.

If the BLM approves off-lease measurement, the approval is effective on the date that the approval is issued, unless the approval specifies a different effective date.

§ 3173.25 Existing off-lease measurement approval.

(a) Upon receipt of an operator's request for assignment of an FMP number to a facility associated with an off-lease measurement approval existing on [EFFECTIVE DATE OF THE FINAL RULE], the AO will review the existing off-lease measurement approval for consistency with the minimum standards and requirements for an off-lease measurement approval under § 3173.22 of this subpart. The AO will notify the operator in writing of any inconsistencies or deficiencies.

(b) The operator must correct any inconsistencies or deficiencies that the AO identifies, or provide additional information, within 20 business days of receipt of the AO's notice.

(c) The AO may impose new or amended COAs on an existing off-lease measurement approval to make the approval consistent with the requirements for off-lease measurement under § 3173.22 of this subpart in connection with approving the requested FMP. If the operator appeals one of more of the new COAs, the existing FMP approval will continue in effect during the pendency of the appeal.

(d) If the existing off-lease measurement approval does not meet the standards and requirements of § 3173.22 of this subpart and the operator does not correct the deficiencies, the AO may terminate the existing off-lease measurement approval under § 3173.27 of this subpart and deny the request for an FMP number for the facility associated with the existing off-lease measurement approval.

(e) If the BLM approves a new off-lease measurement arrangement to replace an existing off-lease measurement approval, the new arrangement is effective on the first day of the month following its approval.

§ 3173.26 Relationship of off-lease measurement approval to royalty-free use of production.

Approval of off-lease measurement does not constitute approval of off-lease royalty-free use of production as fuel in facilities located at an FMP approved under the off-lease measurement approval. The operator may seek such approval under applicable rules.

§ 3173.27 Termination of off-lease measurement approval.

(a) The operator may terminate the off-lease measurement by submitting a Sundry Notice to the BLM. The Sundry Notice must identify the new FMP(s) for the lease(s), unit(s), or CA(s) previously subject to the off-lease measurement approval.

(b) The BLM may terminate off-lease measurement approval for any reason, including, but not limited to, the following:

(1) Changes in technology, regulation, or BLM policy; or

(2) Non-compliance with the terms or conditions of approval of the off-lease measurement approval or §§ 3173.22 through 3173.26 of this subpart.

(c) The BLM will notify the operator in writing that the off-lease measurement approval has been terminated, the reason for the termination, and the effective date of the termination.

(d) If off-lease measurement is terminated, each lease, unit, or CA that was subject to the off-lease measurement will revert to measurement on the respective lease, unit, or CA.

§ 3173.28 Instances not constituting off-lease measurement, for which no approval is required.

(a) If the approved FMP is located on the well pad of a directionally drilled well that produces oil and gas from a lease, unit, or CA on which the well pad is not located, measurement at the FMP does not constitute off-lease measurement. However, if the FMP is located off of the well pad, regardless of distance, measurement at the FMP constitutes off-lease measurement, and BLM approval is required under §§ 3173.22 through 3173.26 of this subpart.

(b) If a lease, unit, or CA consists of more than one separate tract whose boundaries are not contiguous (*e.g.*, a single lease comprised of two or more separate tracts), measurement of production at an FMP located on one of the tracts is not considered to be off-lease measurement if:

(1) The production is moved from one tract to another tract within the same lease, unit, or CA to another area of the lease, unit, or CA on which the FMP is located; and

(2) Production is not diverted during the movement between the tracts before the FMP, except for production used royalty free.

§ 3173.29 Immediate assessments.

Certain instances of noncompliance warrant the imposition of immediate assessments upon discovery, as prescribed in the following table. Imposition of these assessments does not preclude other appropriate enforcement actions:

BILLING CODE 4310–84–P

Violations subject to an immediate assessment		
Violation:	**Assessment amount per violation:**	**Assessment will be issued to:**
1. An appropriate valve on an oil storage tank was not sealed, as required by § 3173.2 of this subpart.	$1,000	Operator
2. An appropriate valve or component on an oil metering system was not sealed, as required by § 3173.3 of this subpart.	$1,000	Operator
3. A Federal seal is removed without prior approval of the AO or AR, as required by § 3173.4 of this subpart.	$1,000	Operator, purchaser, or transporter, as appropriate
4. Oil was not properly measured before removal from storage for use on a different lease, unit, or CA, as required by § 3173.7(b) of this subpart.	$1,000	Operator
5. An FMP was bypassed, in violation of § 3170.4 of this part.	$1,000	Operator
6. Theft or mishandling of production was not reported to the BLM, as required by § 3173.8 of this subpart.	$1,000	Operator, purchaser, or transporter, as appropriate
7. Records necessary to determine quantity and quality of production were not retained, as required by § 3173.9(a)(1) of this subpart for Federal operations or § 3173.9(a)(2) of this subpart for Indian operations.	$1,000	Operator, purchaser, or transporter, as appropriate.
8. BLM approval for an FMP was not obtained before removing production, as required by § 3173.12 of this subpart.	$1,000	Operator
9. BLM approval for off-lease measurement was not obtained before removing production, as required by § 3173.23 of this subpart.	$1,000	Operator
10. BLM approval for surface commingling was not obtained before removing production, as required by § 3173.15 of this subpart.	$1,000	Operator
11. BLM approval for downhole commingling was not obtained before removing production, as required by §§ 3173.14 and 3173.15 of this subpart.	$1,000	Operator

Appendix to Subpart 3173

I. Diagrams

1. Site Facility Diagrams and Sealing of Valve Introduction
2. Diagrams

Diagrams	Appendix Pages	Description
I-A	1-1	Simple gas well without equipment
I-B	1-2	Simple gas well with equipment
I-C	1-3 thru 1-5	Single operator with co-located facilities single oil tank, gas, and water storage
I-D	1-6 and 1-8	Oil sales with multiple oil tanks, gas, and water storage
I-E	1-9 thru 1-12	Co-located facilities with multiple operators, oil sales by Lease Automatic Custody Transfer (LACT) system, gas, and water storage
I-F	1-13 thru 1-16	On-lease gas plant, with oil sales by LACT, Liquefied Petroleum Gas (LPG)/Natural Gas Liquids (NGL) sales by LACT, inlet gas, tailgate gas, flared or vented and plant process gas used.
I-G	1-17 thru 1-19	Enhanced recovery water injection or other water disposal facility.
I-H	1-20 thru 1-23	Pod Facility

1. ***Site Facility Diagrams*** *and* ***Sealing of Valves Introduction***

Introduction

Appendix to 3173 is provided not as a requirement but solely as an example to aid operators, purchasers and transporters in determining what valves are considered to be "appropriate valves" subject to the seal requirements of this proposed rule, and to aid in the preparation of facility diagrams. It is impossible to include every type of equipment that could be used or situation that could occur in production activities. In making the determination of what is an "appropriate valve," the entire facility must be considered as a whole, including the facility size, the equipment type, and the on-going activities at the facility. The signature block, in which a company representative certifies each diagram's accuracy, may be placed directly on the diagram or on a separate piece of paper accompanying the diagram. As shown in this Appendix, the signature block may appear in a box or as a line of text.

I-A

Facility Operator/Owner Name: ABC Oil and Gas

Federal/Indian Lease, unit PA, or CA Number: NMNM12345

Land Description: New Mexico Principal Meridian,
T. 36 N., R. 11 W., sec. 2, NW1/4NE1/4

Page 1 of 1

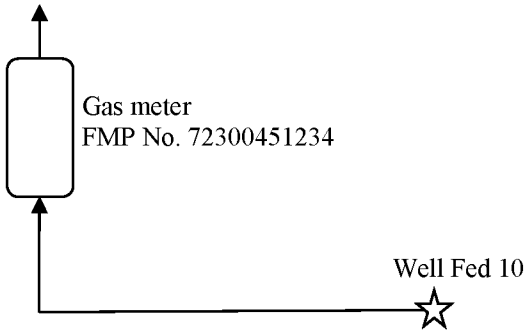

I certify on behalf of the below-listed company that the information contained in this site facility diagram is accurate and	
Company Name: (print name)	
Company Representative: (print name)	
Representative Signature:	Date:

I-B

Facility Operator/Owner Name: ABC Oil and Gas
Land Description: New Mexico Principal Meridian,
T. 36 N., R. 11 W., sec. 2, NW1/4NE1/4

Federal/Indian Lease, unit PA, or CA Number: NMNM12345
Page 1 of 1

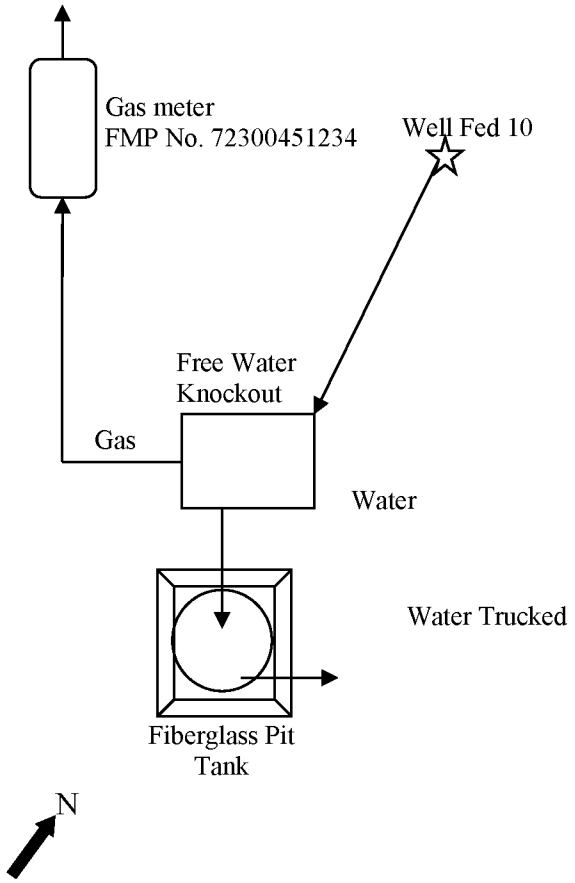

I certify on behalf of the below-listed company that the information contained in this site facility diagram is accurate and	
Company Name: (print name)	
Company Representative: (print name)	
Representative Signature:	Date:

Free Water Knockout Manufacturer: XYZ Equipment
Serial No. F-9876
Gas Usage less than 0.1 Mcf/day

I-C

Facility Operator/Owner Name: ABC Oil and Gas Federal/Indian Lease, unit PA, or CA Number: NMNM12345 and NMNM54
Land Description: New Mexico Principal Meridian, T. 36 N., R. 11 W., sec. 2, NW1/4NE1/4

I (print company representative's name) representing (print company name) certify the accuracy and completeness of the information contained in this site facility diagram. (signature of company representative) on (date signed). Page 1 of 3

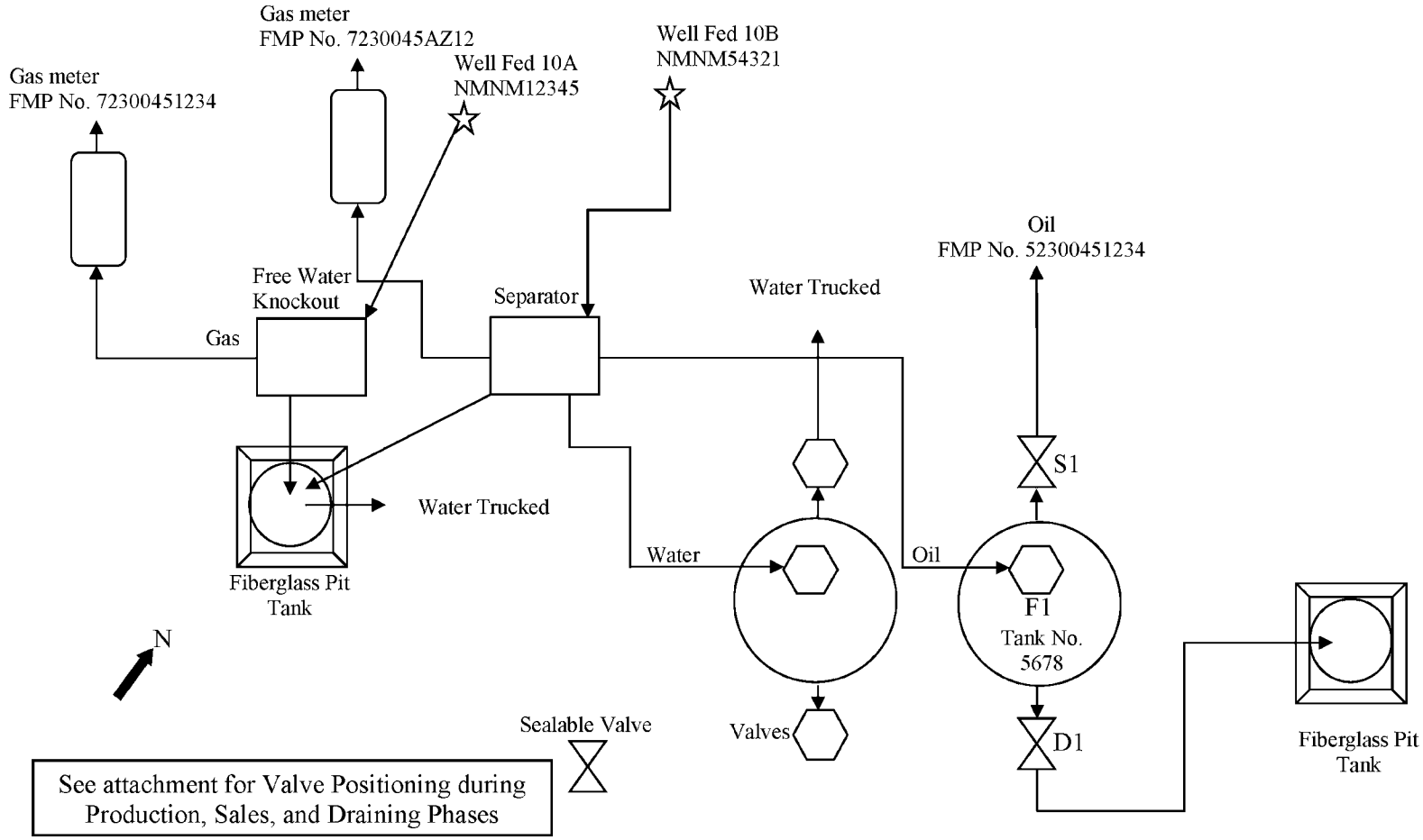

I-C
Appendix
Page 2 of 3

Facility Operator/Owner Name: ABC Oil and Gas Federal/Indian Lease, unit PA, or CA Number: NMNM12345
Land Description: New Mexico Principal Meridian, T. 36 N., R. 11 W., sec. 2, NW1/4NE1/4

Diagram #I-C:
F1 is the Fill Valve
S1 is the Sales Valve
D1 is the Drain Valve

Valve Positioning in the Production Phase for FMP No. 520300451234
Production into T5678
S1 is Sealed Closed
F1 is Open
D1 is Sealed Closed

Valve Positioning in the Sales Phase for FMP No. 520300451234
Sales from T5678
S1 is Open
F1 is Open
D1 is Sealed Closed

Valve Positioning in the Drain Phase for FMP No. 520300451234
Draining from T5678
S1 is Sealed Closed
F1 is Open
D1 is Open

Free Water Knockout Manufacturer: XYZ Equipment
Serial No. F-9876
Gas Usage less than 0.1 Mcf/day

I-C
Page 3 of 3

Facility Operator/Owner Name: ABC Oil and Gas Federal/Indian Lease, unit PA, or CA Number: NMNM12345
Land Description: New Mexico Principal Meridian, T. 36 N., R. 11 W., sec. 2, NW1/4NE1/4

Separator Manufacturer: XYZ Equipment
Serial No. F-9876
Fire box rated at 150,000 btu/hour (btu/hr) operated 4 months/year (mo/yr), 20 hours/day (hrs/day)
150,000 btu/hr ÷ 1157 btu/cubic foot (btu/ft^3) (see current gas analysis) X 20 hrs ÷ 1000 = 2.51 Mcf/day

Pump Jack Manufacturer: Hy-Lift Pumps
Serial No.: 78563-P
Manufacturer fuel use when operated at 75% of rated maximum RPM, 5.87 Mcf/hr X operating 12 hrs. = 70.44 Mcf/day

Water Tank Manufacturer: Super Tanks
Tank Serial No. 3589412-Tank Heater rated at 200,000 btu/hr operated 4 mo/yr, 10 hrs/week,
200,000 btu/hr ÷ 1157 btu/ft^3 (see current gas analysis) X 40 hrs/mo ÷ 1000 = 6.91 MCF/mo.

Oil Tank Manufacturer: Super Tanks
Tank No.: 5678
Tank Serial No. 5863281-Tank Heater rated at 200,000 btu/hr operated 4 mo/yr, 5 hrs/week
200,000 btu/hr ÷ 1157 btu/ft^3 (see current gas analysis) X 20 hrs/mo ÷ 1,000 = 3.46 Mcf/mo.

I-D

Facility Operator/Owner Name: ABC Oil and Gas
Land Description: New Mexico Principal Meridian,
T. 36 N., R. 11 W., sec. 2, NW1/4NE1/4

Federal/Indian Lease, unit PA, or CA Number: NMNM12345
Page 1 of 3

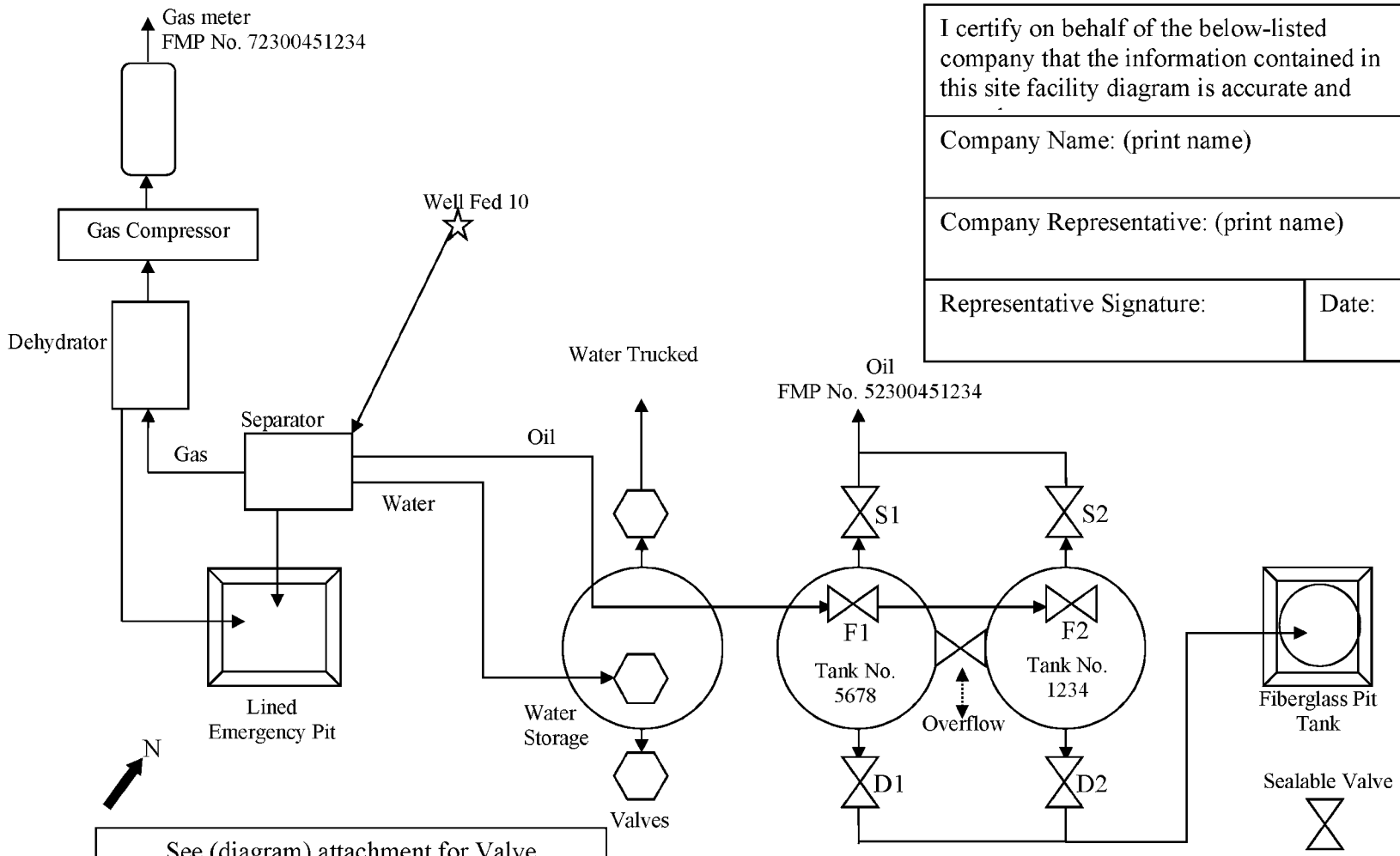

I certify on behalf of the below-listed company that the information contained in this site facility diagram is accurate and	
Company Name: (print name)	
Company Representative: (print name)	
Representative Signature:	Date:

See (diagram) attachment for Valve Positioning during Production, Sales, and Draining Phases

I-D
Appendix
Page 2 of 3

Facility Operator/Owner Name: ABC Oil and Gas Federal/Indian Lease, unit PA, or CA Number: NMNM12345
Land Description: New Mexico Principal Meridian, T. 36 N., R. 11 W., sec. 2, NW1/4NE1/4

Diagram #I-D:
F1 and F2 are Fill Valves
S1 and S2 and Sales Valves
D1 and D2 are Drain Valves

Valve Positioning in the Production Phase for FMP No. 52300451234

Production into T5678	Production into T1234
S1 and D1 are Sealed Closed	S2 and D2 are Sealed Closed
Overflow is Open	Overflow is Open
F1 or F2 are Open	F1 or are F2 Open

Valve Positioning in the Sales Phase for FMP No. 52300451234

Sales from T5678 through S1:	Sales from T1234 through S2:
D1 and F1 are Sealed Closed	D2 and F2 are Sealed Closed
Overflow is Sealed Closed	Overflow is Sealed Closed
S1 is Open	S2 is Open

Valve Positioning in the Drain Phase for FMP No. 52300451234

Draining from T5678	Draining from T1234
S1 and F1 are Sealed Closed	S2 and F2 are Sealed Closed
Overflow is Sealed Closed	Overflow is Sealed Closed
D1 is Open	D2 is Open

Compressor Manufacturer: Maximum Compression
Compressor Serial No.: SWS-586324-D
Manufacturer fuel use when operated at 80% of rated maximum, 24.87 Mcf/hr X 24 hrs. = 596.88 Mcf/day

I-D

Page 3 of 3

Facility Operator/Owner Name: ABC Oil and Gas Federal/Indian Lease, unit PA, or CA Number: NMNM12345
Land Description: New Mexico Principal Meridian, T. 36 N., R. 11 W., sec. 2, NW1/4NE1/4

Compressor Manufacturer: Maximum Compression
Compressor Serial No.: SWS-586324-D
Manufacturer fuel use when operated at 80% of rated maximum, 24.87 Mcf/hr X 24 hrs. = 596.88 Mcf/day

Dehydrator Manufacturer: XYZ Equipment
Serial No. 5423895358
Fire box rated at 75,000 btu/hr operated, 20 hrs/day
75,000 btu/hr ÷ 1,157 btu/ft^3 (see current gas analysis) X 24 ÷ 1,000 = 1.56 Mcf/day

Separator Manufacturer: XYZ Equipment
Serial No. F-9876
Fire box rated at 150,000 btu/hr operated 4 mo/yr, 20 hrs/day
150,000 btu/hr ÷ 1,157 btu/ft^3 (see current gas analysis) X 20 hrs ÷1,000 = 2.59 Mcf/day

Water Tank Manufacturer: Super Tanks
Tank Serial No. 3589412-Tank Heater rated at 200,000 btu/hr operated 4 mo/yr, 10 hrs/week, 70% efficiency
200,000 btu/hr ÷ 1,157 btu/ft^3 (see current gas analysis) X 40 hrs/mo ÷ 1,000 = 6.91 Mcf/mo.

Oil Tank Manufacturer: Super Tanks
Tank No.: 5678
Tank Serial No. 5863281-Tank Heater rated at 200,000 btu/hr operated 4 mo/yr, 5 hrs/week
200,000 btu/hr ÷ 1,157 btu/ft^3 (see current gas analysis) X 20 hrs/mo ÷ 1,000 = 3.46 Mcf/mo.

Oil Tank Manufacturer: Unknown
Tank No.: 1234
Tank Serial No. N/A-Tank Heater rated at 200,000 btu/hr operated 4 mo/yr, 5 hrs/week
200,000 btu/hr ÷ 1,157 btu/ft^3 (see current gas analysis) X 20 hrs/mo ÷ 1,000 = 3.46 Mcf/mo.

I-E

Facility Operator/Owner Name: ABC Oil and Gas Federal/Indian Lease, unit PA, or CA Number: NMNM12345
Land Description: New Mexico Principal Meridian, T. 36 N., R. 11 W., sec. 2, NW1/4NE1/4
I (print company representative's name) representing (print company name) certify the accuracy and completeness of the information contained within this site facility diagram. (signature of company representative) on (date signed). Page 1 of 4

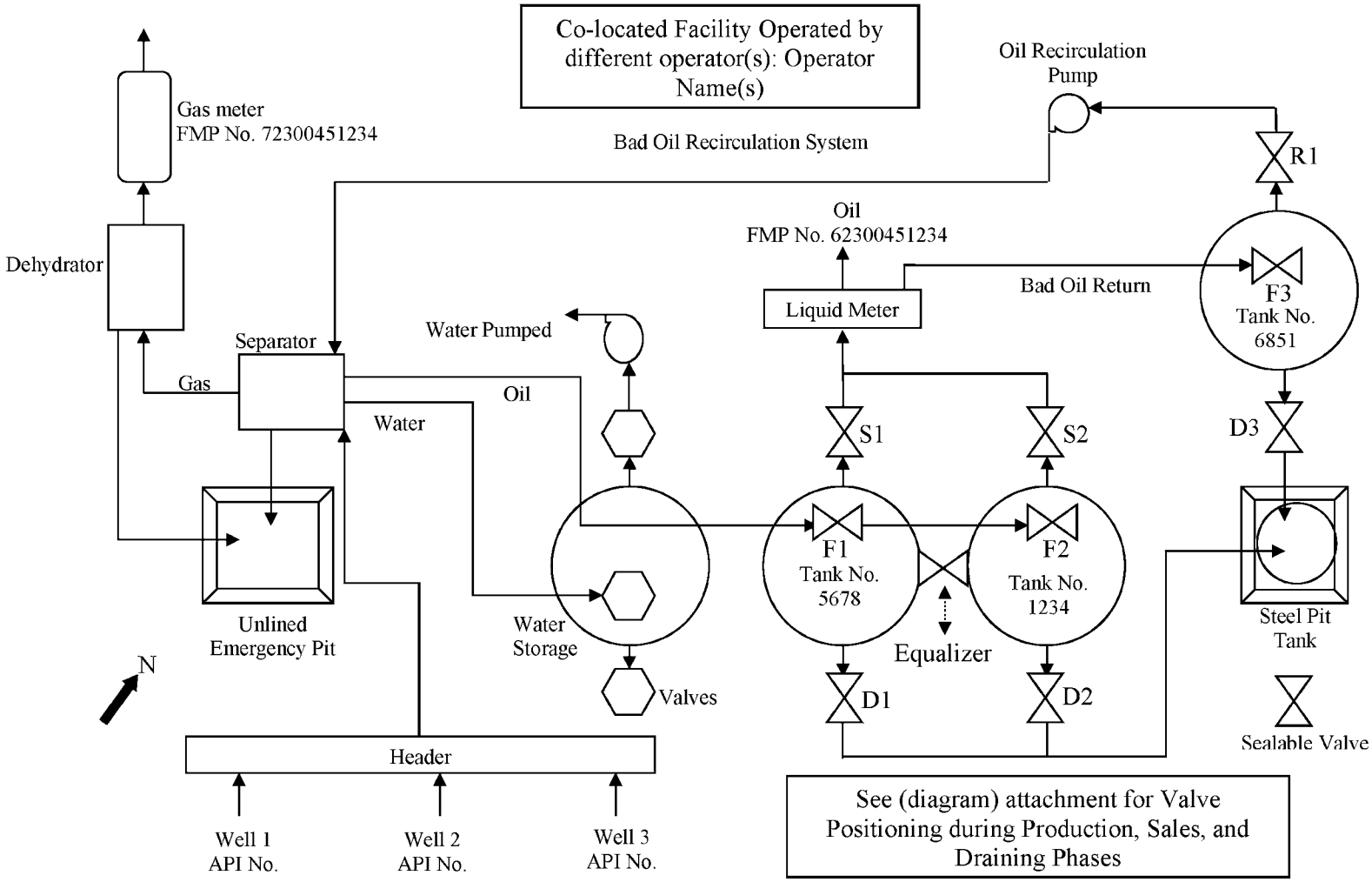

Appendix
Page 2 of 4

Facility Operator/Owner Name: ABC Oil and Gas Federal/Indian Lease, unit PA, or CA Number: NMNM12345
Land Description: New Mexico Principal Meridian, T. 36 N., R. 11 W., sec. 2, NW1/4NE1/4

Diagram #I-E:
F1, F2 and F3 are Fill Valves
S1 and S2 are Sales Valves
D1 and D2 are Drain Valves
R1 is a Recirculation Valve

Valve Positioning in the Production Phase for FMP No. 62300451234
Production into T5678, T1234 and 6851
S1, F1, F2, F3 and R1 are Open
D1 and D2 are Sealed Closed
Equalizer is open

Valve Positioning in the Sales Phase for FMP No. 62300451234
Production into T5678, T1234 and 6851
S1, F1, F2, F3 and R1 are Open
D1 and D2 are Sealed Closed
Equalizer is open

Valve Positioning in the Drain Phase for FMP No. 62300451234

Draining from T5678		Draining from T1234
S1 and F1 are Sealed Closed		S2 and F2 are Sealed Closed
Equalizer is Sealed Closed		Equalizer is Sealed Closed
D1 and S2 are Open	D2 and S1 are Open	
D2 Sealed Closed		D1 Sealed Closed

Dehydrator Manufacturer: XYZ Equipment
Serial No. 5423895358
Fire box rated at 75,000 btu/hr operated 24 hrs/day, 20 hrs/day
75,000 btu/hr ÷ 1,157 btu/ft^3 (see current gas analysis) X 24 ÷ 1,000 = 1.56 Mcf/day

I-E
Page 3 of 4

Facility Operator/Owner Name: ABC Oil and Gas Federal/Indian Lease, unit PA, or CA Number: NMNM12345
Land Description: New Mexico Principal Meridian, T. 36 N., R. 11 W., sec. 2, NW1/4NE1/4

Dehydrator Manufacturer: XYZ Equipment
Serial No. 5423895358
Fire box rated at 75,000 btu/hr operated 24 hrs/day, 20 hrs/day
75,000 btu/hr ÷ 1,157 btu/ft^3 (see current gas analysis) X 24 ÷ 1,000 = 1.56 Mcf/day

Separator Manufacturer: XYZ Equipment
Serial No. F-9876
Fire box rated at 150,000 btu/hr operated 4 mo/yr, 20 hrs/day
150,000 btu/hr ÷ 1,157 btu/ft^3 (see current gas analysis) X 20 ÷ 1,000 = 2.59 Mcf/day

Charge pump, water pump and oil recirculation pump are electric motor driven and not subject to beneficial use.

Valve Positioning in the Drain Phase for Tank No 6851

R1 is Sealed Closed
F3 is Sealed Closed
D3 Open

I-E

Page 4 of 4

Facility Operator/Owner Name: ABC Oil and Gas Federal/Indian Lease, unit PA, or CA Number: NMNM12345
Land Description: New Mexico Principal Meridian, T. 36 N., R. 11 W., sec. 2, NW1/4NE1/4

The following components on liquid measurement metering system will be effectively sealed (list as appropriate) for FMP No.: 62300451234

1. Sample probe, manufacturer, serial number;
2. Sampler volume control, manufacturer, serial number;
3. All valves on lines entering or leaving the sample container excluding the safety pop-off valve (if so equipped). Each valve must be sealed in the open or closed position, as appropriate, manufacturer, serial number;
4. Meter assembly, including the counter head and meter head, manufacturer, serial number;
5. Temperature averager, manufacturer, serial number;
6. Back-pressure valve downstream of the meter, manufacturer, serial number;
7. Any drain valves in the system;
8. Manual sampling valves (if so equipped);
9. Valves larger than 1 inch on the diverter lines;
10. Temperature recorder, manufacturer, serial number;
11. Right-angle drive, manufacturer, serial number;
12. Totalizer, manufacturer, serial number; and
13. Prover connections.

I-F

Facility Operator/Owner Name: Oil and Gas Plant Operations Inc.
Land Description: New Mexico Principal Meridian,
T. 36 N., R. 11 W., sec. 2, NW1/4NE1/4

Federal/Indian Lease, unit PA, or CA Number: NMNM12345
Page 1 of 4

I (print company representative's name) representing (print company name) certify the accuracy and completeness of the information contained within this site facility diagram. (signature of company representative) on (date signed).

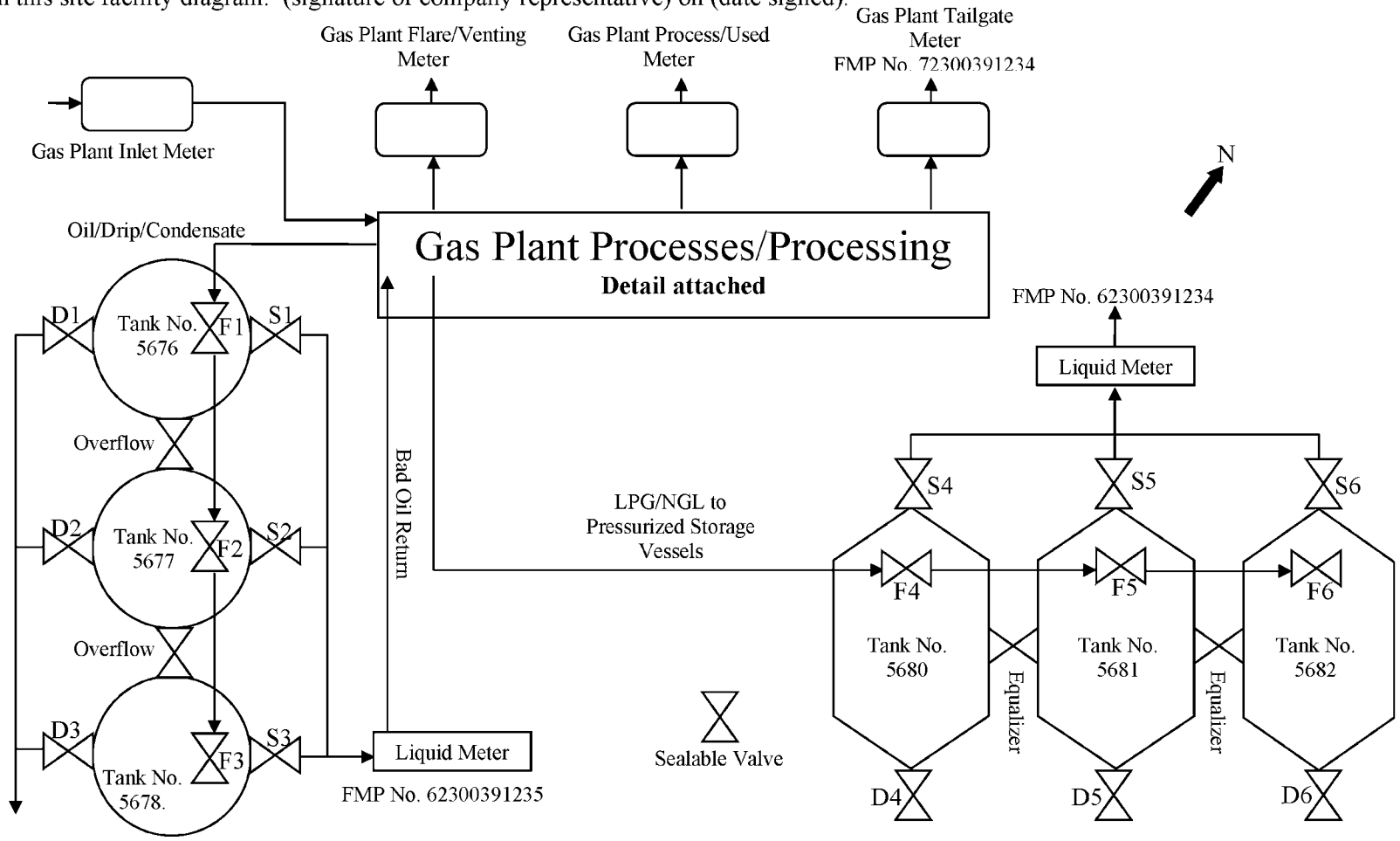

IF
Appendix

Facility Operator/Owner Name: ABC Oil and Gas
Land Description: New Mexico Principal Meridian,
T. 36 N., R. 11 W., sec. 2, NW1/4NE1/4

Federal/Indian Lease, unit PA, or CA Number: NMNM12345
Page 2 of 4

Diagram #I-F:
F1, F2, F3, F4, F5, and F6 are Fill Valves
S1, S2, S3, S4, S5, and S6 are Sales Valves
D1, D2, D3, D4, D5 and D6 are Drain Valves

Valve Positioning in the Production Phase for FMP No. 62300391235

Production into T5676	Production into T5677:	Production into T5678
D1 is Sealed Closed	D2 is Sealed Closed	D3 is Sealed Closed

Valve Positioning in the Sales Phase for FMP No. 62300391235

Sales from T5676 through S1:	Sales from T5677 through S2:	Sales from T5678
D1 is Sealed Closed	D2 is Sealed Closed	D3 is Sealed Closed

Valve Positioning in the Drain Phase for FMP No. 62300391235

Draining from T5676	Draining from T5677:	Draining from T5678
S1 is Sealed Closed	S2 is Sealed Closed	S3 is Sealed Closed
F1 is Sealed Closed	F2 is Sealed Closed	F3 is Sealed Closed
Overflow is Sealed Closed	Overflow is Sealed Closed	Overflow is Sealed Closed
D1 is Open	D2 is Open	D3 is Open

Valve Positioning in the Production Phase for FMP No. 62300391234

Production into T5680	Production into T5681:	Production into T5682
S4 is Sealed Closed	S5 is Sealed Closed	S6 is Sealed Closed
D4 is Sealed Closed	D5 is Sealed Closed	D6 is Sealed Closed

I-F

Facility Operator/Owner Name: ABC Oil and Gas
Land Description: New Mexico Principal Meridian,
T. 36 N., R. 11 W., sec. 2, NW1/4NE1/4

Federal/Indian Lease, unit PA, or CA Number: NMNM12345
Page 3 of 4

Valve Positioning in the Sales Phase for FMP No. 62300391234

Sales from T5680 through S1:	Sales from T5681 through S2:	Sales from T5682
S4 is Sealed Closed	S5 is Sealed Closed	S6 is Sealed Closed
D4 is Sealed Closed	D5 is Sealed Closed	D6 is Sealed Closed

Valve Positioning in the Drain Phase for FMP No. 62300391234

Draining from T5680	Draining from T5681:	Draining from T5682
S4 is Sealed Closed	S5 is Sealed Closed	S6 is Sealed Closed
F4 is Sealed Closed	F5 is Sealed Closed	F6 is Sealed Closed
Overflow is Sealed Closed	Overflow is Sealed Closed	Overflow is Sealed Closed
D4 is Open	D5 is Open	D6 is Open

Gas Plant Inlet Meter

Meter Manufacturer: ABC Metering
Meter Serial No.: G-25684523
Meter Tube Manufacturer and Serial No.: Best Meter Tubes, VUH2635X

Gas Plant Flared/Venting Meter

Meter Manufacturer: ABC Metering
Meter Serial No.: R-25368456
Meter Tube Manufacturer and Serial No.: Best Meter Tubes, BAS23587ADD

Gas Plant Process/Used Meter

Meter Manufacturer: ABC Metering
Meter Serial No.: H-398742
Meter Tube Manufacturer and Serial No.: Best Meter Tubes, FG15783854HJK

I-F

Facility Operator/Owner Name: ABC Oil and Gas
Land Description: New Mexico Principal Meridian,
T. 36 N., R. 11 W., sec. 2, NW1/4NE1/4

Federal/Indian Lease, unit PA, or CA Number: NMNM12345
Page 4 of 4

Gas Plant Process/Used Meter

Meter Manufacturer: ABC Metering
Meter Serial No.: H-398742
Meter Tube Manufacturer and Serial No.: Best Meter Tubes, FG15783854HJK

The following components on liquid measurement metering system will be effectively sealed (list as appropriate) for FMP No.: 62300451234

1. Sample probe, manufacturer, serial number;
2. Sampler volume control, manufacturer, serial number;
3. All valves on lines entering or leaving the sample container excluding the safety pop-off valve (if so equipped). Each valve must be sealed in the open or closed position, as appropriate, manufacturer, serial number;
4. Meter assembly, including the counter head and meter head;
5. Temperature averager, manufacturer, serial number;
6. Back-pressure valve downstream of the meter, manufacturer, serial number;
7. Any drain valves in the system;
8. Manual sampling valves (if so equipped);
9. Valves larger than 1 inch on the diverter lines;
10. Temperature recorder, manufacturer, serial number;
11. Right-angle drive, manufacturer, serial number;
12. Totalizer, manufacturer, serial number; and
13. Prover connections.

I-G

Facility Operator/Owner Name: ABC Oil and Gas
Land Description: New Mexico Principal Meridian,
T. 36 N., R. 11 W., sec. 2, NW1/4NE1/4

Federal/Indian Lease, unit PA, or CA Number: NMNM98765
Page 1 of 3

I (print company representative's name) representing (print company name) certify the accuracy and completeness of the information contained within this site facility diagram. (signature of company representative) on (date signed).

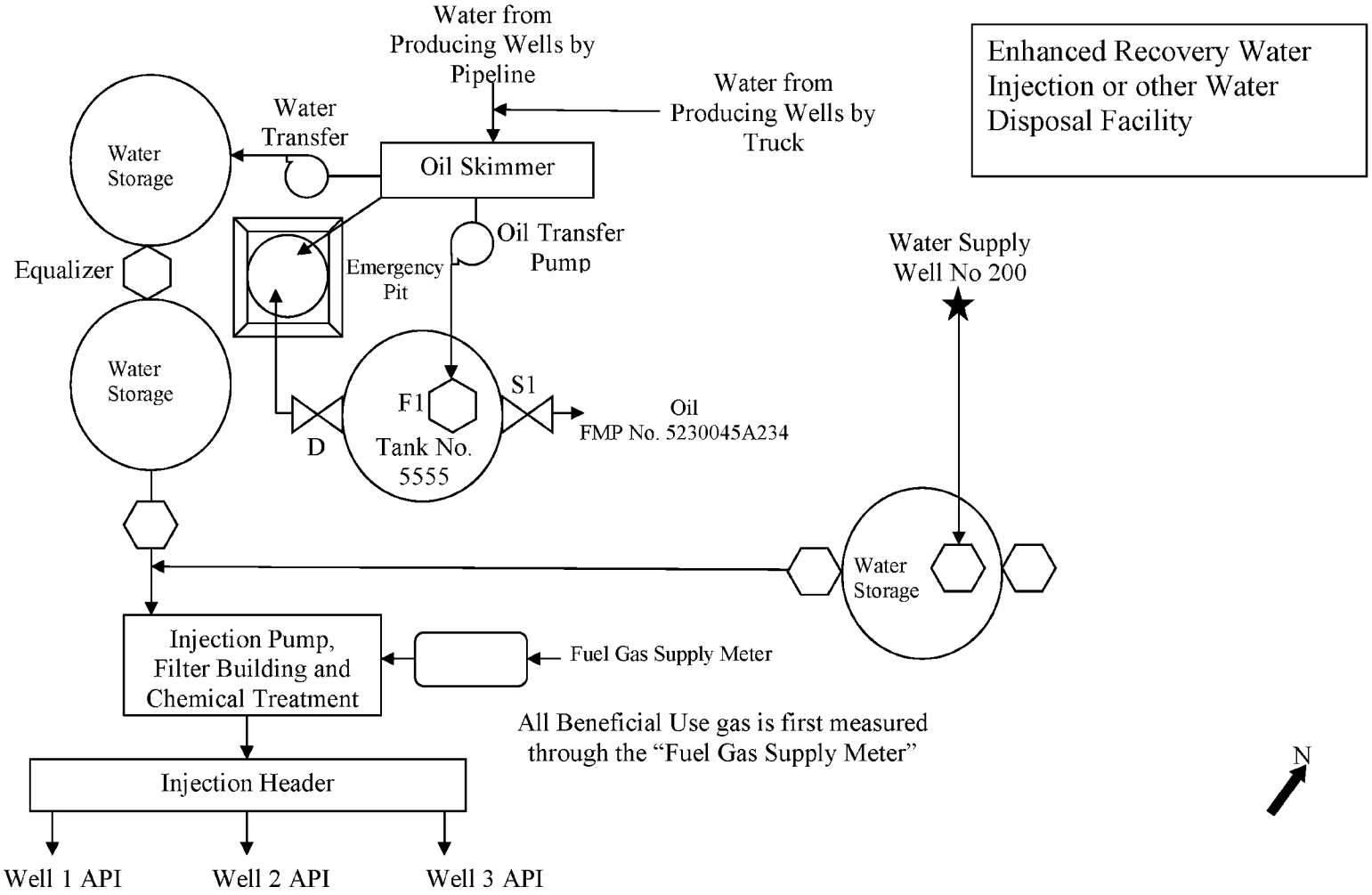

I-G

Appendix

Facility Operator/Owner Name: ABC Oil and Gas
Land Description: New Mexico Principal Meridian,
T. 36 N., R. 11 W., sec. 2, NW1/4NE1/4

Federal/Indian Lease, unit PA, or CA Number: NMNM98765
Page 2 of 3

Diagram #I-G:
F1 is the Fill Valve
S1 is the Sales Valve
D1 is the Drain Valve

Valve Positioning in the Production Phase for FMP No. 52030045A234
Production into T5555
S1 is Sealed Closed
F1 is Open
D1 is Sealed Closed

Valve Positioning in the Sales Phase for FMP No. 52030045A234
Sales form T5555
S1 is Open
F1 is Open
D1 is Sealed Closed

Valve Positioning in the Drain Phase for FMP No. 52030045A234
Draining from T5555
S1 is Sealed Closed
F1 is Open
D1 is Open

Oil Tank Manufacturer: Super Tanks
Tank No.: 5555
Tank Serial No. 5863281

I-G
Page 3 of 3:

Fuel gas meter

Meter Manufacturer: ABC Metering
Meter Serial No.: F-258645
Meter Tube Manufacturer and Serial No.: Best Meter Tubes, DRFG254

I-H

Facility Operator/Owner Name: ABC Oil and Gas
Land Description: New Mexico Principal Meridian,
T. 36 N., R. 11 W., sec. 2, NW1/4NE1/4

Federal/Indian Lease, unit PA, or CA Number: NMNM98765
Page 1 of 4

I (print company representative's name) representing (print company name) certify the accuracy and completeness of the information contained within this site facility diagram. (Signature of company representative) on (Date signed).

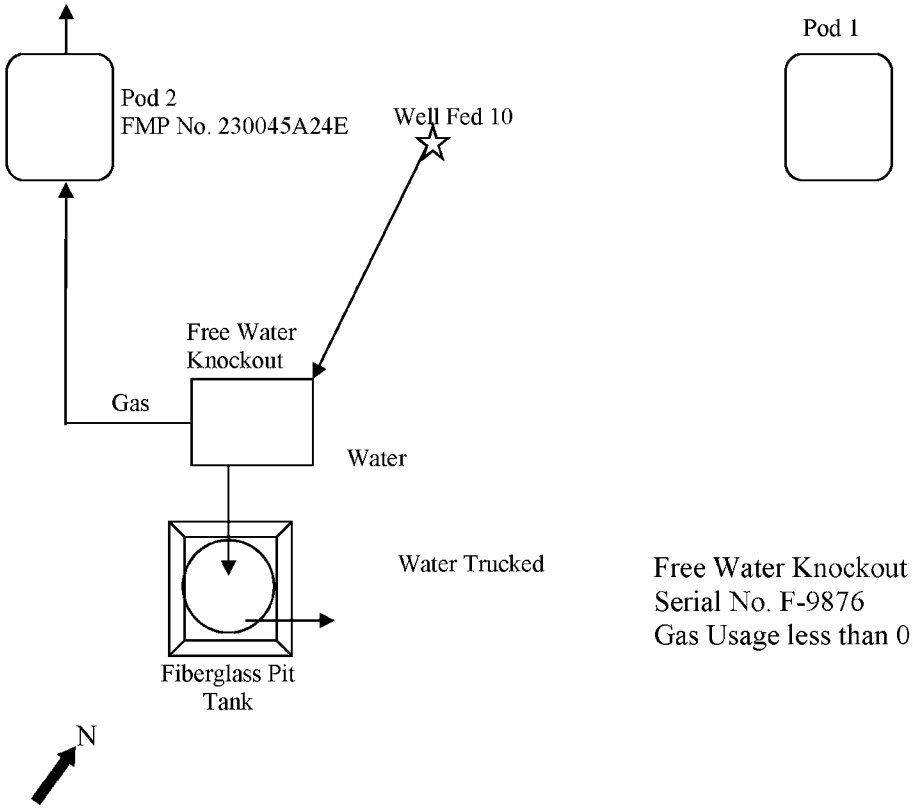

Free Water Knockout Manufacturer: XYZ Equipment
Serial No. F-9876
Gas Usage less than 0.1 Mcf/day

I-H

Facility Operator/Owner Name: ABC Oil and Gas
Land Description: New Mexico Principal Meridian,
T. 36 N., R. 11 W., sec. 2, NW1/4NE1/4

Federal/Indian Lease, unit PA, or CA Number: NMNM98765
Page 2 of 4

POD Facility
2

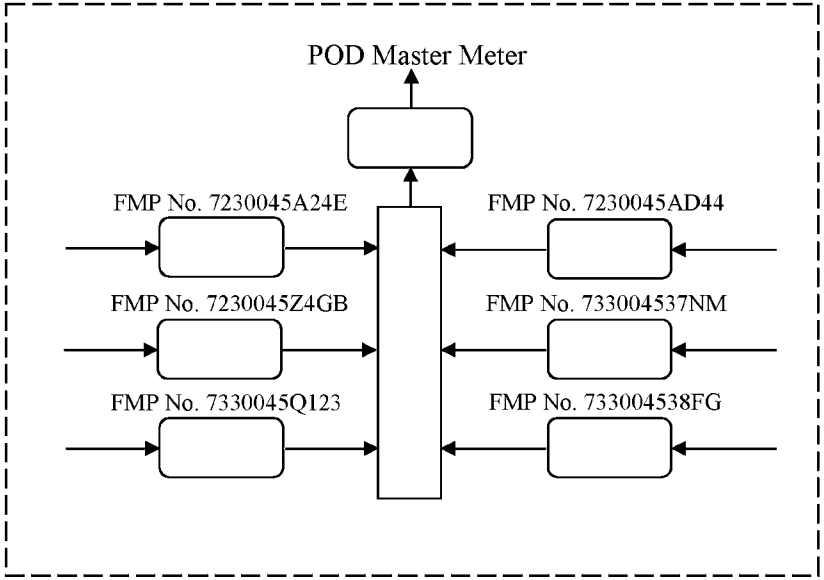

POD Facility
1

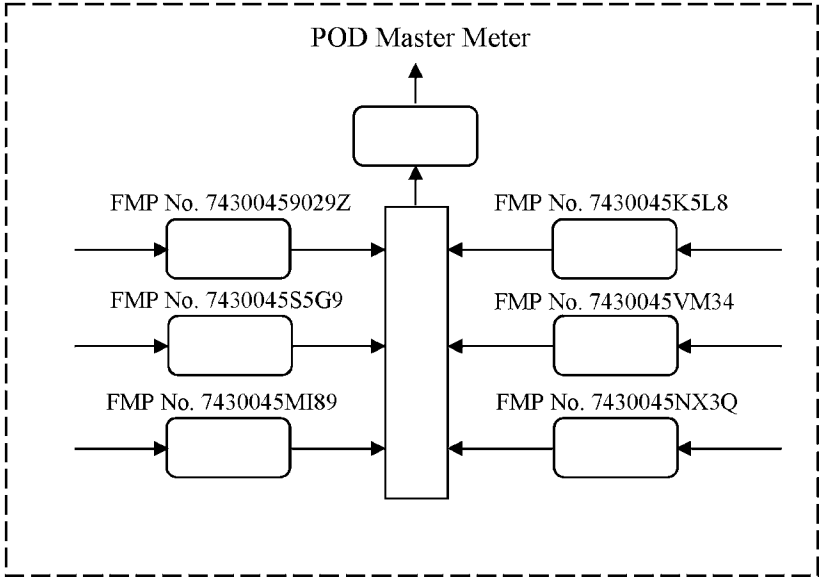

I-H

Facility Operator/Owner Name: ABC Oil and Gas
Land Description: New Mexico Principal Meridian,
T. 36 N., R. 11 W., sec. 2, NW1/4NE1/4

Federal/Indian Lease, unit PA, or CA Number: NMNM98765
Page 3 of 4

POD 1

Master Meter
Meter Manufacturer: ABC Metering
Meter Serial No.: C-4869A
Meter Tube Manufacturer: Best Meter Tubes
Meter Tube Serial No.: DTHG111

FMP No. 74300459029Z
Federal/Indian Lease, unit PA, or CA Number: NMNM98765

FMP No. 7430045K5L8
Federal/Indian Lease, unit PA, or CA Number: NMNM98765

FMP No. 7430045S5G9
Federal/Indian Lease, unit PA, or CA Number: NMNM1234A

FMP No. 7430045VM34
Federal/Indian Lease, unit PA, or CA Number: NMNM56789D

FMP No. 7430045MI89
Federal/Indian Lease, unit PA, or CA Number: NMSF10254

FMP No. 7430045NX3Q
Federal/Indian Lease, unit PA, or CA Number: NMSF10254

I-H

Facility Operator/Owner Name: ABC Oil and Gas
Land Description: New Mexico Principal Meridian,
T. 36 N., R. 11 W., sec. 2, NW1/4NE1/4

Federal/Indian Lease, unit PA, or CA Number: NMNM98765
Page 4 of 4

POD 2

Master Meter
Meter Manufacturer: ABC Metering
Meter Serial No.: C-43948869A
Meter Tube Manufacturer: Best Meter Tubes
Meter Tube Serial No.: DTHG112611

FMP No. 74300459029Z
Federal/Indian Lease, unit PA, or CA Number: NMNM56789

FMP No. 7430045K5L8
Federal/Indian Lease, unit PA, or CA Number: NMNM54321A

FMP No. 7430045S5G9
Federal/Indian Lease, unit PA, or CA Number: NMNM1234C

FMP No. 7430045VM34
Federal/Indian Lease, unit PA, or CA Number: NMNM56789B

FMP No. 7430045MI89
Federal/Indian Lease, unit PA, or CA Number: NMSF10983

FMP No. 7430045NX3Q
Federal/Indian Lease, unit PA, or CA Number: NMSF10254

[FR Doc. 2015–16737 Filed 7–10–15; 4:15 pm]
BILLING CODE 4310–84–P