AUTHENTICATED
U.S. GOVERNMENT
INFORMATION
GPO

FEDERAL REGISTER

Vol. 80 Wednesday,
No. 170 September 2, 2015

Pages 52935–53234

OFFICE OF THE FEDERAL REGISTER

The **FEDERAL REGISTER** (ISSN 0097–6326) is published daily, Monday through Friday, except official holidays, by the Office of the Federal Register, National Archives and Records Administration, Washington, DC 20408, under the Federal Register Act (44 U.S.C. Ch. 15) and the regulations of the Administrative Committee of the Federal Register (1 CFR Ch. I). The Superintendent of Documents, U.S. Government Publishing Office, Washington, DC 20402 is the exclusive distributor of the official edition. Periodicals postage is paid at Washington, DC.

The **FEDERAL REGISTER** provides a uniform system for making available to the public regulations and legal notices issued by Federal agencies. These include Presidential proclamations and Executive Orders, Federal agency documents having general applicability and legal effect, documents required to be published by act of Congress, and other Federal agency documents of public interest.

Documents are on file for public inspection in the Office of the Federal Register the day before they are published, unless the issuing agency requests earlier filing. For a list of documents currently on file for public inspection, see *www.ofr.gov.*

The seal of the National Archives and Records Administration authenticates the Federal Register as the official serial publication established under the Federal Register Act. Under 44 U.S.C. 1507, the contents of the **Federal Register** shall be judicially noticed.

The **Federal Register** is published in paper and on 24x microfiche. It is also available online at no charge at *www.fdsys.gov*, a service of the U.S. Government Publishing Office.

The online edition of the **Federal Register** is issued under the authority of the Administrative Committee of the Federal Register as the official legal equivalent of the paper and microfiche editions (44 U.S.C. 4101 and 1 CFR 5.10). It is updated by 6:00 a.m. each day the **Federal Register** is published and includes both text and graphics from Volume 59, 1 (January 2, 1994) forward. For more information, contact the GPO Customer Contact Center, U.S. Government Publishing Office. Phone 202-512-1800 or 866-512-1800 (toll free). E-mail, *gpocusthelp.com.*

The annual subscription price for the **Federal Register** paper edition is $749 plus postage, or $808, plus postage, for a combined **Federal Register, Federal Register** Index and List of CFR Sections Affected (LSA) subscription; the microfiche edition of the **Federal Register** including the **Federal Register** Index and LSA is $165, plus postage. Six month subscriptions are available for one-half the annual rate. The prevailing postal rates will be applied to orders according to the delivery method requested. The price of a single copy of the daily **Federal Register,** including postage, is based on the number of pages: $11 for an issue containing less than 200 pages; $22 for an issue containing 200 to 400 pages; and $33 for an issue containing more than 400 pages. Single issues of the microfiche edition may be purchased for $3 per copy, including postage. Remit check or money order, made payable to the Superintendent of Documents, or charge to your GPO Deposit Account, VISA, MasterCard, American Express, or Discover. Mail to: U.S. Government Publishing Office—New Orders, P.O. Box 979050, St. Louis, MO 63197-9000; or call toll free 1-866-512-1800, DC area 202-512-1800; or go to the U.S. Government Online Bookstore site, see *bookstore.gpo.gov.*

There are no restrictions on the republication of material appearing in the **Federal Register.**

How To Cite This Publication: Use the volume number and the page number. Example: 80 FR 12345.

Postmaster: Send address changes to the Superintendent of Documents, Federal Register, U.S. Government Publishing Office, Washington, DC 20402, along with the entire mailing label from the last issue received.

SUBSCRIPTIONS AND COPIES

PUBLIC

Subscriptions:

Paper or fiche	**202–512–1800**
Assistance with public subscriptions	**202–512–1806**

General online information **202–512–1530; 1–888–293–6498**

Single copies/back copies:

Paper or fiche	**202–512–1800**
Assistance with public single copies	**1–866–512–1800 (Toll-Free)**

FEDERAL AGENCIES

Subscriptions:

Assistance with Federal agency subscriptions:

Email	*FRSubscriptions@nara.gov*
Phone	**202–741–6000**

Printed on recycled paper.

Contents

Federal Register

Vol. 80, No. 170

Wednesday, September 2, 2015

Agency for Healthcare Research and Quality
NOTICES
Agency Information Collection Activities; Proposals, Submissions, and Approvals, 53154–53157
Patient Safety Organizations:
Safe Pediatric Healthcare PSO; Delisting, 53154

Agency for Toxic Substances and Disease Registry
NOTICES
Toxicological Profiles:
Perfluoroalkyls, 53157

Agricultural Marketing Service
PROPOSED RULES
Raisins Produced from Grapes Grown in California; Increased Assessment Rate, 53022–53024
U.S. Standards for Grades of Fresh Fruits and Vegetables, Fruits and Vegetables for Processing, Nuts, and Specialty Crops, 53021

Agricultural Research Service
PROPOSED RULES
Changes to Fees and Payment Methods, 53021–53022

Agriculture Department
See Agricultural Marketing Service
See Agricultural Research Service
See Animal and Plant Health Inspection Service

Animal and Plant Health Inspection Service
NOTICES
Determination of Nonregulated Status:
J.R. Simplot Co.; Potatoes Genetically Engineered for Late Blight Resistance, Low Acrylamide Potential, Reduced Black Spot Bruising, and Lowered Reducing Sugars, 53101–53102

Bureau of Safety and Environmental Enforcement
NOTICES
Agency Information Collection Activities; Proposals, Submissions, and Approvals:
Plans and Information, 53189–53191

Census Bureau
NOTICES
Agency Information Collection Activities; Proposals, Submissions, and Approvals:
Special Census Program, 53102–53103

Centers for Disease Control and Prevention
NOTICES
Agency Information Collection Activities; Proposals, Submissions, and Approvals, 53157–53159

Centers for Medicare & Medicaid Services
PROPOSED RULES
Medicare Program; End-Stage Renal Disease Prospective Payment System:
Correction, 53087–53088

Children and Families Administration
NOTICES
Agency Information Collection Activities; Proposals, Submissions, and Approvals, 53159–53161

Coast Guard
RULES
Drawbridge Operations:
English Kills, Brooklyn, NY, 53000
Upper Mississippi River, Rock Island, IL, 52999
Special Local Regulations:
Annual Marine Events in the Eighth Coast Guard District, Sabine River, Orange, TX, 52999
Marine Events, Wrightsville Channel; Wrightsville Beach, NC, 52996–52998
Southern California Annual Marine Events for the San Diego Captain of the Port Zone; San Diego Bay, San Diego, CA, 52993–52996

Commerce Department
See Census Bureau
See Foreign-Trade Zones Board
See Industry and Security Bureau
See International Trade Administration
See National Institute of Standards and Technology
See National Oceanic and Atmospheric Administration

Commission of Fine Arts
NOTICES
Meetings:
Commission of Fine Arts, 53135

Committee for Purchase From People Who Are Blind or Severely Disabled
NOTICES
Procurement List; Additions and Deletions, 53136–53138

Commodity Futures Trading Commission
NOTICES
Meetings:
Agricultural Advisory Committee, 53138

Consumer Product Safety Commission
PROPOSED RULES
Safety Standard for Automatic Residential Garage Door Operators, 53036–53058

Council of the Inspectors General on Integrity and Efficiency
NOTICES
Senior Executive Service Performance Review Board Membership, 53138–53142

Defense Department
See Navy Department
NOTICES
Meetings:
Judicial Proceedings Since Fiscal Year 2012 Amendments Panel, 53142–53143

Drug Enforcement Administration
NOTICES
Decisions and Orders:
Abbas E. Sina, M.D., 53191–53203

Education Department
NOTICES
Agency Information Collection Activities; Proposals, Submissions, and Approvals:
Income Based Repayment—Notifications, 53143–53144

Energy Department
See Federal Energy Regulatory Commission
NOTICES
Meetings:
Environmental Management Site-Specific Advisory Board, Northern New Mexico, 53144
Environmental Management Site-Specific Advisory Board, Savannah River Site, 53144–53145

Environmental Protection Agency
RULES
Air Quality State Implementation Plans; Approvals and Promulgations:
Arizona; Phased Discontinuation of Stage II Vapor Recovery Program, 53001–53007
Significant New Uses:
Substituted Cyclosiloxane; Removal, 53000–53001
PROPOSED RULES
Air Quality State Implementation Plans; Approvals and Promulgations:
Arizona; Phased Discontinuation of Stage II Vapor Recovery Program, 53086–53087
NOTICES
Agency Information Collection Activities; Proposals, Submissions, and Approvals, 53151–53152
Proposed Administrative Settlements Pursuant to CERCLA, 53151

Federal Aviation Administration
RULES
Airworthiness Directives:
Airbus Airplanes, 52935–52937
Bombardier, Inc. Airplanes, 52937–52939, 52955–52959
Empresa Brasileira de Aeronautica S.A. (Embraer) Airplanes, 52953–52955
Lockheed Martin Corporation/Lockheed Martin Aeronautics Company Airplanes, 52941–52946
The Boeing Company Airplanes, 52939–52941, 52948–52953
Vulcanair S.p.A. Airplanes, 52946–52948
PROPOSED RULES
Airworthiness Directives:
Airbus Helicopters (Previously Eurocopter France (Eurocopter) Helicopters, 53024–53028
MD Helicopters Inc. (MDHI) Helicopters, 53030–53032
MD Helicopters Inc., Helicopters, 53028–53030
Temporary Flight Restrictions in the Proximity of Launch and Reentry Operations, 53033–53036
NOTICES
Petitions for Exemptions; Summaries, 53223
Surplus Property Deed Obligation Release:
Luke Auxiliary Airfield #6, Buckeye, Maricopa County, AZ, 53222–53223

Federal Communications Commission
PROPOSED RULES
Petitions for Reconsideration of Action in Rulemaking Proceeding, 53088
NOTICES
Agency Information Collection Activities; Proposals, Submissions, and Approvals, 53153

Federal Emergency Management Agency
RULES
Final Flood Elevation Determinations, 53007–53011
NOTICES
Changes in Flood Hazard Determinations, 53169–53173
Flood Hazard Determinations, 53168–53169, 53176–53179
Flood Hazard Determinations; Changes, 53165–53168, 53173–53176
Major Disaster Declarations:
West Virginia, 53169

Federal Energy Regulatory Commission
NOTICES
Applications:
Brookfield White Pine Hydro, LLC; Merimil, LP, 53148–53149
Combined Filings, 53146–53150
Complaints:
Shell Energy North America (US) LP v. California Independent System Operator Corp., 53146
Environmental Assessments; Availability, etc.:
Beverly Lock and Dam Water Power; Devola Lock and Dam Water Power Project; Malta/McConnelsville Lock and Dam Water Power Project; et al., 53145–53146
Initial Market-Based Rate Filings Including Requests for Blanket Section 204 Authorizations:
Censtar Energy Corp., 53148
Censtar Operating Co., LLC, 53146–53147
Oasis Power, LLC, 53150–53151

Federal Railroad Administration
NOTICES
Petitions:
Product Safety Plan Approvals, 53223–53224

Federal Reserve System
NOTICES
Changes in Bank Control:
Acquisitions of Shares of a Bank or Bank Holding Company, 53153–53154
Formations of, Acquisitions by, and Mergers of Bank Holding Companies, 53153

Fish and Wildlife Service
NOTICES
Permits:
Endangered and Threatened Wildlife and Plants, 53186–53188

Food and Drug Administration
NOTICES
Agency Information Collection Activities; Proposals, Submissions, and Approvals:
Guidance for Industry on Safety Labeling Changes—Implementation of Section 505(o)(4) of the Federal Food, Drug, and Cosmetic Act, 53161–53162
Meetings:
Food and Drug Administration/Drug Information Association Oligonucleotide-Based Therapeutics Conference, 53162–53163

Foreign Assets Control Office
NOTICES
Blocking or Unblocking of Persons and Properties, 53225–53229

Foreign-Trade Zones Board
NOTICES
Applications for Reorganization under Alternative Site Framework:
Foreign-Trade Zone 182, Fort Wayne, IN, 53103–53104

Health and Human Services Department
See Agency for Healthcare Research and Quality
See Agency for Toxic Substances and Disease Registry
See Centers for Disease Control and Prevention
See Centers for Medicare & Medicaid Services
See Children and Families Administration
See Food and Drug Administration
See National Institutes of Health

Homeland Security Department
See Coast Guard
See Federal Emergency Management Agency
See U.S. Citizenship and Immigration Services
PROPOSED RULES
Privacy Act; Systems of Records, 53019–53021
NOTICES
Agency Information Collection Activities; Proposals, Submissions, and Approvals:
National Initiative for Cybersecurity Careers and Studies Cybersecurity Training and Education Catalog, Training/Workforce Development Catalog, Collection, 53180–53181
Privacy Act; Systems of Records, 53181–53185

Industry and Security Bureau
RULES
Addition of Certain Persons to the Entity List, 52963–52972
Revisions to License Exception Availability for Consumer Communications Devices and Licensing Policy for Civil Telecommunications-related Items Such as Infrastructure Regarding Sudan: Correction, 52962–52963
Updated Statements of Legal Authority for the Export Administration Regulations to Include August 7, 2015 Extension of Emergency Declared in Executive Order 13222, 52959–52962

Interior Department
See Bureau of Safety and Environmental Enforcement
See Fish and Wildlife Service
See Land Management Bureau

Internal Revenue Service
RULES
Administration of Multiemployer Plan Participant Vote on an Approved Suspension of Benefits under MPRA, 52972–52976
U.S. Property Held by Controlled Foreign Corporations in Transactions Involving Partnerships; Rents and Royalties Derived in the Active Conduct of a Trade or Business, 52976–52982
PROPOSED RULES
Administration of Multiemployer Plan Participant Vote on an Approved Suspension of Benefits under MPRA, 53068–53070
U.S. Property Held by Controlled Foreign Corporations in Transactions Involving Partnerships; Rents and Royalties Derived in the Active Conduct of a Trade or Business, 53058–53068
NOTICES
Agency Information Collection Activities; Proposals, Submissions, and Approvals, 53229–53234
Agency Information Collection Activities; Proposals, Submissions, and Approvals:
Disclosure of Returns and Return Information to Designee of Taxpayer, 53232–53233
Meetings:
Art Advisory Panel, 53230

International Trade Administration
NOTICES
Antidumping or Countervailing Duty Investigations, Orders, or Reviews:
Certain Pasta from Turkey, 53112
Certain Preserved Mushrooms from Chile, India, Indonesia and the People's Republic of China, 53104–53105
Polyethylene Retail Carrier Bags from Thailand, 53111–53112
Purified Carboxymethylcellulose from the Netherlands, 53112–53114
Uncovered Innerspring Units from the People's Republic of China, 53105–53106
Initiation of Antidumping and Countervailing Duty Administrative Reviews, 53106–53111

Justice Department
See Drug Enforcement Administration
See Justice Programs Office
See Parole Commission

Justice Programs Office
NOTICES
Meetings:
Public Safety Officer Medal of Valor Review Board, 53203

Labor Department
See Mine Safety and Health Administration
NOTICES
Agency Information Collection Activities; Proposals, Submissions, and Approvals:
Weekly Claims and Extended Benefits Data and Weekly Initial and Continued Weeks Claimed, 53203–53204

Land Management Bureau
NOTICES
Applications:
Withdrawal Extension; Idaho, 53188–53189
Realty Actions:
Application for Segregation and Conveyance of Federally Owned Mineral Interests in Mathews County, VA, 53188

Mine Safety and Health Administration
RULES
MSHA Headquarters, Pittsburgh Safety and Health Technology Center, and Respirable Dust Processing Laboratory Address Changes, 52984–52993
PROPOSED RULES
Proximity Detection Systems for Mobile Machines in Underground Mines, 53070–53086

National Aeronautics and Space Administration
NOTICES
Requests for Nominations:
NASA Federal Advisory Committees, 53204–53205

National Highway Traffic Safety Administration
RULES
Allowing Importers to Provide Information to U.S. Customs and Border Protection in Electronic Format, 53011–53015
NOTICES
Agency Information Collection Activities; Proposals, Submissions, and Approvals, 53224–53225

National Institute of Standards and Technology
NOTICES
Agency Information Collection Activities; Proposals, Submissions, and Approvals:
Malcolm Baldrige National Quality Award Application, 53114–53115

National Institutes of Health
NOTICES
Agency Information Collection Activities; Proposals, Submissions, and Approvals:
Application Forms for the National Institute of Drug Abuse Summer Research Internship Program, 53164–53165
Exclusive Licenses:
Biomarkers for Acute Ischemic Stroke, 53163–53164
Meetings:
Center for Scientific Review, 53163
National Institute of Allergy and Infectious Diseases, 53163–53164

National Oceanic and Atmospheric Administration
RULES
Fisheries of the Northeastern United States:
Atlantic Bluefish Fishery; Quota Transfer, 53015
Fisheries Off West Coast States:
Modifications of the West Coast Commercial and Recreational Salmon Fisheries; Inseason Actions #22 through #29, 53015–53018
PROPOSED RULES
Fisheries off West Coast States:
Pacific Coast Groundfish Fishery; Process For Divestiture of Excess Quota Shares in the Individual Fishing Quota Fishery, 53088–53100
NOTICES
Determinations of Overfishing or an Overfished Condition, 53115
Takes of Marine Mammals:
Pier Replacement Project, 53115–53135

Navy Department
NOTICES
Agency Information Collection Activities; Proposals, Submissions, and Approvals, 53143

Office of the Special Counsel
NOTICES
Service Contract Inventory, 53205–53206

Parole Commission
RULES
Paroling, Recommitting and Supervising Federal Prisoners:
Prisoners Serving Sentences under the United States and District of Columbia Codes, 52982–52984

Securities and Exchange Commission
NOTICES
Self-Regulatory Organizations; Proposed Rule Changes:
BATS Exchange, Inc., 53207–53209
BATS Y-Exchange, Inc., 53216–53217
BOX Options Exchange, LLC, 53213–53216
Chicago Board Options Exchange, Inc., 53218–53219
EDGA Exchange, Inc., 53209–53210
EDGX Exchange, Inc., 53206–53207
NASDAQ OMX PHLX, LLC, 53211–53213
National Securities Clearing Corp., 53219–53221

State Department
NOTICES
Imposition of Nonproliferation Measures Against Foreign Persons, Including a Ban on U.S. Government Procurement, 53222

Transportation Department
See Federal Aviation Administration
See Federal Railroad Administration
See National Highway Traffic Safety Administration
NOTICES
Applications for Certificate Authority:
Harris Aircraft Services, Inc., 53225

Treasury Department
See Foreign Assets Control Office
See Internal Revenue Service

U.S. Citizenship and Immigration Services
NOTICES
Agency Information Collection Activities; Proposals, Submissions, and Approvals, 53185–53186

Reader Aids

Consult the Reader Aids section at the end of this issue for phone numbers, online resources, finding aids, and notice of recently enacted public laws.

To subscribe to the Federal Register Table of Contents LISTSERV electronic mailing list, go to http://listserv.access.gpo.gov and select Online mailing list archives, FEDREGTOC-L, Join or leave the list (or change settings); then follow the instructions.

CFR PARTS AFFECTED IN THIS ISSUE

A cumulative list of the parts affected this month can be found in the Reader Aids section at the end of this issue.

6 CFR

Proposed Rules:

5 53019

7 CFR

Proposed Rules:

51 53021
504 53021
989 53022

14 CFR

39 (8 documents) 52935, 52937, 52939, 52941, 52946, 52948, 52953, 52955

Proposed Rules:

39 (3 documents) 53024, 53028, 53030
91 53033

15 CFR

730 52959
732 52959
734 52959
736 52959
738 52959
740 (2 documents) 52959, 52962
742 52959
743 52959
744 (2 documents) 52959, 52963
746 52959
747 52959
748 52959
750 52959
752 52959
754 52959
756 52959
758 52959
760 52959
762 52959
764 52959
766 52959
768 52959
770 52959
772 52959
774 52959

16 CFR

Proposed Rules:

1211 53036

26 CFR

1 (2 documents) 52972, 52976

Proposed Rules:

1 (2 documents) 53058, 53068

28 CFR

2 52982

30 CFR

7 52984
18 52984
44 52984
46 52984
48 52984
49 52984
56 52984
57 52984
70 52984
71 52984
72 52984
74 52984
75 52984
90 52984

Proposed Rules:

75 53020

33 CFR

100 (3 documents) 52993, 52996, 52999
117 (2 documents) 52999, 53000

40 CFR

9 53000
52 53001
721 53000

Proposed Rules:

52 53086

42 CFR

Proposed Rules:

413 53087

44 CFR

67 53007

47 CFR

Proposed Rules:

54 53088

49 CFR

591 53011
592 53011

50 CFR

648 53015
660 53015

Proposed Rules:

660 53088

Rules and Regulations

Federal Register

Vol. 80, No. 170

Wednesday, September 2, 2015

This section of the FEDERAL REGISTER contains regulatory documents having general applicability and legal effect, most of which are keyed to and codified in the Code of Federal Regulations, which is published under 50 titles pursuant to 44 U.S.C. 1510.

The Code of Federal Regulations is sold by the Superintendent of Documents. Prices of new books are listed in the first FEDERAL REGISTER issue of each week.

DEPARTMENT OF TRANSPORTATION

Federal Aviation Administration

14 CFR Part 39

[Docket No. FAA–2015–0085; Directorate Identifier 2014–NM–078–AD; Amendment 39–18255; AD 2015–17–22]

RIN 2120–AA64

Airworthiness Directives; Airbus Airplanes

AGENCY: Federal Aviation Administration (FAA), Department of Transportation (DOT).

ACTION: Final rule.

SUMMARY: We are adopting a new airworthiness directive (AD) for all Airbus Model A330–243, A330–243F, A330–341, A330–342, and A330–343 airplanes. This AD was prompted by reports indicating that certain hinge sleeves on the cowl doors of the thrust reverser units (TRUs) were not heat treated. This AD requires replacing the sleeves of certain hinges on the cowl doors of the TRUs with new parts. We are issuing this AD to prevent, in the event of a fan-blade-off event due to high vibration, in-flight loss of TRU heavy components, which might damage airplane structure or control surfaces and consequently reduce controllability of the airplane.

DATES: This AD becomes effective October 7, 2015.

The Director of the Federal Register approved the incorporation by reference of certain publications listed in this AD as of October 7, 2015.

ADDRESSES: You may examine the AD docket on the Internet at *http://www.regulations.gov/#!docketDetail;D=FAA-2015-0085* or in person at the Docket Management Facility, U.S. Department of Transportation, Docket Operations, M–30, West Building Ground Floor, Room W12–140, 1200 New Jersey Avenue SE., Washington, DC.

For Airbus service information identified in this AD, contact Airbus SAS, Airworthiness Office—EAL, 1 Rond Point Maurice Bellonte, 31707 Blagnac Cedex, France; telephone +33 5 61 93 36 96; fax +33 5 61 93 45 80; email *airworthiness.A330-A340@airbus.com;* Internet *http://www.airbus.com.* For Aircelle service information identified in this AD, contact Aircelle Customer support Center, BP 50042, 50, rue Pierre Curie, 78371 Plaisir Cedex, France: telephone +33 (0)1 64 14 80 33; fax +33 (0)1 64 14 84 10. You may view this referenced service information at the FAA, Transport Airplane Directorate, 1601 Lind Avenue SW., Renton, WA. For information on the availability of this material at the FAA, call 425–227–1221. It is also available on the Internet at *http://www.regulations.gov* by searching for and locating Docket No. FAA–2015–0085.

FOR FURTHER INFORMATION CONTACT: Vladimir Ulyanov, Aerospace Engineer, International Branch, ANM–116, Transport Airplane Directorate, FAA, 1601 Lind Avenue SW., Renton, WA 98057–3356; telephone 425–227–1138; fax 425–227–1149.

SUPPLEMENTARY INFORMATION:

Discussion

We issued a notice of proposed rulemaking (NPRM) to amend 14 CFR part 39 by adding an AD that would apply to all Airbus Model A330–243, A330–243F, A330–341, A330–342, and A330–343 airplanes. The NPRM published in the **Federal Register** on February 13, 2015 (80 FR 7986).

The European Aviation Safety Agency (EASA), which is the Technical Agent for the Member States of the European Union, has issued EASA Airworthiness Directive 2014–0062, dated March 11, 2014 (referred to after this as the Mandatory Continuing Airworthiness Information, or ''the MCAI''), to correct an unsafe condition for all Airbus Model A330–243, A330–243F, A330–341, A330–342, and A330–343 airplanes. The MCAI states:

> A manufacturing discrepancy (lack of heat treatment) on a batch of the N°3 and N°4 hinge sleeves installed on [a] Thrust Reverser Unit (TRU) was identified. Those parts are only installed on A330 aeroplanes equipped with Rolls-Royce (RR) Trent 700 engines.
>
> This condition, if not corrected, in case of a Fan Blade Off event due to high vibration level, could cause in-flight loss of some heavy components of the TRU, possibly resulting in injury to persons on the ground [or damage to airplane structure or control surfaces, and consequent reduced controllability of the airplane].
>
> As current hinge sleeves are not serialized, it is not possible to identify the TRU hinge sleeves which did not receive the heat treatment. The part supplier has developed an identification procedure for these TRU hinge sleeves in order to identify the affected hinge sleeves, and to allow a better part traceability in the future.
>
> For the reason described above, this [EASA] AD requires identification and replacement of the affected TRU hinge sleeves.

You may examine the MCAI in the AD docket on the Internet at *http://www.regulations.gov/#!documentDetail;D=FAA-2015-0085-0002.*

Comments

We gave the public the opportunity to participate in developing this AD. We received no comments on the NPRM (80 FR 7986, February 13, 2015) or on the determination of the cost to the public.

Conclusion

We reviewed the relevant data and determined that air safety and the public interest require adopting this AD as proposed except for minor editorial changes. We have determined that these minor changes:

- Are consistent with the intent that was proposed in the NPRM (80 FR 7986, February 13, 2015) for correcting the unsafe condition; and
- Do not add any additional burden upon the public than was already proposed in the NPRM (80 FR 7986, February 13, 2015).

Related Service Information Under 1 CFR Part 51

Airbus has issued Service Bulletin A330–78–3021, Revision 03, dated October 15, 2014. Aircelle has issued Service Bulletin 78–AG924, dated September 26, 2012. This service information describes procedures for modifying and marking the sleeves for hinges number 3 and number 4 on the cowl doors of Rolls-Royce Trent 700 engines. This service information is reasonably available because the interested parties have access to it through their normal course of business or by the means identified in the **ADDRESSES** section of this AD.

Costs of Compliance

We estimate that this AD affects 24 airplanes of U.S. registry.

We also estimate that it will take about 29 work-hours per product to comply with the basic requirements of this AD. The average labor rate is $85 per work-hour. Required parts will cost about $0 per product. Based on these figures, we estimate the cost of this AD on U.S. operators to be $59,160, or $2,465 per product.

In addition, we estimate that any necessary follow-on action will take up to 1 work-hour and require parts costing $0, for a cost of $85 per product. We have no way of determining the number of aircraft that might need this action.

Authority for This Rulemaking

Title 49 of the United States Code specifies the FAA's authority to issue rules on aviation safety. Subtitle I, section 106, describes the authority of the FAA Administrator. ''Subtitle VII: Aviation Programs,'' describes in more detail the scope of the Agency's authority.

We are issuing this rulemaking under the authority described in ''Subtitle VII, Part A, Subpart III, Section 44701: General requirements.'' Under that section, Congress charges the FAA with promoting safe flight of civil aircraft in air commerce by prescribing regulations for practices, methods, and procedures the Administrator finds necessary for safety in air commerce. This regulation is within the scope of that authority because it addresses an unsafe condition that is likely to exist or develop on products identified in this rulemaking action.

Regulatory Findings

We determined that this AD will not have federalism implications under Executive Order 13132. This AD will not have a substantial direct effect on the States, on the relationship between the national government and the States, or on the distribution of power and responsibilities among the various levels of government.

For the reasons discussed above, I certify that this AD:

1. Is not a ''significant regulatory action'' under Executive Order 12866;

2. Is not a ''significant rule'' under the DOT Regulatory Policies and Procedures (44 FR 11034, February 26, 1979);

3. Will not affect intrastate aviation in Alaska; and

4. Will not have a significant economic impact, positive or negative, on a substantial number of small entities under the criteria of the Regulatory Flexibility Act.

Examining the AD Docket

You may examine the AD docket on the Internet at *http://www.regulations.gov/#!docketDetail;D=FAA-015-0085;* or in person at the Docket Management Facility between 9 a.m. and 5 p.m., Monday through Friday, except Federal holidays. The AD docket contains this AD, the regulatory evaluation, any comments received, and other information. The street address for the Docket Operations office (telephone 800–647–5527) is in the **ADDRESSES** section.

List of Subjects in 14 CFR Part 39

Air transportation, Aircraft, Aviation safety, Incorporation by reference, Safety.

Adoption of the Amendment

Accordingly, under the authority delegated to me by the Administrator, the FAA amends 14 CFR part 39 as follows:

PART 39—AIRWORTHINESS DIRECTIVES

■ 1. The authority citation for part 39 continues to read as follows:

Authority: 49 U.S.C. 106(g), 40113, 44701.

§ 39.13 [Amended]

■ 2. The FAA amends § 39.13 by adding the following new airworthiness directive (AD):

2015–17–22 Airbus: Amendment 39–18255. Docket No. FAA–2015–0085; Directorate Identifier 2014–NM–078–AD.

(a) Effective Date

This AD becomes effective October 7, 2015.

(b) Affected ADs

None.

(c) Applicability

This AD applies to all Airbus Model A330–243, A330–243F, A330–341, A330–342, and A330–343 airplanes, certificated in any category, all manufacturer serial numbers.

(d) Subject

Air Transport Association (ATA) of America Code 78, Exhaust.

(e) Reason

This AD was prompted by reports indicating that certain hinge sleeves on the cowl doors of the thrust reverser units (TRUs) were not heat treated. We are issuing this AD to prevent, in the event of a fan-blade-off event due to high vibration, in-flight loss of TRU heavy components, which might damage airplane structure or control surfaces and consequently reduce controllability of the airplane.

(f) Compliance

Comply with this AD within the compliance times specified, unless already done.

(g) Identification of TRU Part Number

Within 12 months after the effective date of this AD: Identify the part number of the TRUs, in accordance with the information in Aircelle Service Bulletin 78–AG924, dated September 26, 2012.

(h) Replacement of TRU Hinge Sleeves

If the results of the part identification required by paragraph (g) of this AD reveal that the TRUs are affected: Within the compliance time defined in paragraph (g) of this AD, replace hinge sleeves numbers 3 and 4 of each TRU cowl door, in accordance with the Accomplishment Instructions of Airbus Service Bulletin A330–78–3021, Revision 03, dated October 15, 2014.

Note 1 to paragraph (h) of this AD: Rolls-Royce Alert Service Bulletin RB.211–78–AG924, dated September 26, 2012, is an additional source of guidance for replacing the TRUs and is not incorporated by reference in this AD.

(i) Optional Terminating Action for Paragraphs (g) and (h) of this AD

Modifying an airplane by incorporating Airbus Modification 202463 in production terminates the requirements specified in paragraphs (g) and (h) of this AD for that airplane.

(j) Parts Installation Limitation

As of the effective date of this AD, no person may install a TRU on any airplane unless it has been determined, using Aircelle Service Bulletin 78–AG924, dated September 26, 2012, that the cowl door hinge sleeves installed on the TRU are not affected by the requirements of this AD.

(k) Credit for Previous Actions

This paragraph provides credit for the actions required by paragraph (h) of this AD if those actions were performed before the effective date of this AD using the service information identified in paragraphs (k)(1), (k)(2), or (k)(3) of this AD, which are not incorporated by reference in this AD.

(1) Airbus Service Bulletin A330–78–3021, dated October 17, 2012.

(2) Airbus Service Bulletin A330–78–3021, Revision 01, dated July 30, 2013.

(3) Airbus Service Bulletin A330–78–3021, Revision 02, dated April 17, 2014.

(l) Other FAA AD Provisions

The following provisions also apply to this AD:

(1) *Alternative Methods of Compliance (AMOCs):* The Manager, International Branch, ANM–116, Transport Airplane Directorate, FAA, has the authority to approve AMOCs for this AD, if requested using the procedures found in 14 CFR 39.19. In accordance with 14 CFR 39.19, send your request to your principal inspector or local Flight Standards District Office, as appropriate. If sending information directly to the International Branch, send it to ATTN: Vladimir Ulyanov, Aerospace Engineer, International Branch, ANM–116, Transport Airplane Directorate, FAA, 1601 Lind Avenue SW., Renton, WA 98057–3356; telephone 425–227–1138; fax 425–227–1149. Information may be emailed to: *9-ANM-116-*

AMOC-REQUESTS@faa.gov. Before using any approved AMOC, notify your appropriate principal inspector, or lacking a principal inspector, the manager of the local flight standards district office/certificate holding district office. The AMOC approval letter must specifically reference this AD.

(2) *Contacting the Manufacturer:* For any requirement in this AD to obtain corrective actions from a manufacturer, the action must be accomplished using a method approved by the Manager, International Branch, ANM–116, Transport Airplane Directorate, FAA; or the European Aviation Safety Agency (EASA); or Airbus's EASA Design Organization Approval (DOA). If approved by the DOA, the approval must include the DOA-authorized signature.

(3) *Required for Compliance (RC):* Where Airbus Service Bulletin A330–78–3021, Revision 03, dated October 15, 2014, contains procedures or tests that are identified as RC, those procedures and tests must be done to comply with this AD; any procedures and tests that are not identified as RC are recommended. Those procedures and tests that are not identified as RC may be deviated from using accepted methods in accordance with the operators' maintenance or inspection program without obtaining approval of an AMOC, provided the procedures and tests identified as RC can be done and the airplane can be put back in a serviceable condition. Any substitutions or changes to procedures or tests identified as RC require approval of an AMOC.

(m) Related Information

(1) Refer to Mandatory Continuing Airworthiness Information (MCAI) EASA AD 2014–0062, dated March 11, 2014, for related information. This MCAI may be found in the AD docket on the Internet at *http://www.regulations.gov/#!documentDetail;D=FAA-2015-0085-0002.*

(2) Airbus service information identified in this AD that is not incorporated by reference is available at the addresses specified in paragraphs (n)(3) and (n)(5) of this AD.

(3) Rolls-Royce service information identified in this AD that is not incorporated by reference is available at Rolls-Royce plc, P.O. Box 31, Derby, DE24 8BJ, England; phone: 011–44–1332–242424; fax: 011–244–1332–249936; email: *http://www.rolls-royce.com/contact/civil_team.jsp;* Internet: *https://www.aeromanager.com.*

(n) Material Incorporated by Reference

(1) The Director of the Federal Register approved the incorporation by reference (IBR) of the service information listed in this paragraph under 5 U.S.C. 552(a) and 1 CFR part 51.

(2) You must use this service information as applicable to do the actions required by this AD, unless this AD specifies otherwise.

(i) Airbus Service Bulletin A330–78–3021, Revision 03, dated October 15, 2014.

(ii) Aircelle Service Bulletin 78–AG924, dated September 26, 2012.

(3) For Airbus service information identified in this AD, contact Airbus SAS, Airworthiness Office—EAL, 1 Rond Point Maurice Bellonte, 31707 Blagnac Cedex, France; telephone +33 5 61 93 36 96; fax +33 5 61 93 45 80; email *airworthiness.A330–A340@airbus.com;* Internet *http://www.airbus.com.*

(4) For Aircelle service information identified in this AD, contact Aircelle Customer support Center, BP 50042, 50, rue Pierre Curie, 78371 Plaisir Cedex, France: telephone +33 (0)1 64 14 80 33; fax +33 (0)1 64 14 84 10.

(5) You may view this service information at the FAA, Transport Airplane Directorate, 1601 Lind Avenue SW., Renton, WA. For information on the availability of this material at the FAA, call 425–227–1221.

(6) You may view this service information that is incorporated by reference at the National Archives and Records Administration (NARA). For information on the availability of this material at NARA, call 202–741–6030, or go to: *http://www.archives.gov/federal-register/cfr/ibr-locations.html.*

Issued in Renton, Washington, on August 21, 2015.

Kevin Hull,

Acting Manager, Transport Airplane Directorate, Aircraft Certification Service.

[FR Doc. 2015–21475 Filed 9–1–15; 8:45 am]

BILLING CODE 4910–13–P

DEPARTMENT OF TRANSPORTATION

Federal Aviation Administration

14 CFR Part 39

[Docket No. FAA–2015–0680; Directorate Identifier 2014–NM–165–AD; Amendment 39–18236; AD 2015–17–03]

RIN 2120–AA64

Airworthiness Directives; Bombardier, Inc. Airplanes

AGENCY: Federal Aviation Administration (FAA), Department of Transportation (DOT).

ACTION: Final rule.

SUMMARY: We are adopting a new airworthiness directive (AD) for certain Bombardier, Inc. Model DHC–8–400, –401, and –402 airplanes. This AD was prompted by a report of a main landing gear (MLG) parking brake becoming dislodged from its mounting bracket due to an improperly installed quick release pin of the hand pump lever. This AD requires removing the hand pump lever of the parking brake from the right-hand side nacelle. We are issuing this AD to prevent an unsecured lever from migrating from its stowed position, fouling against the MLG, and subsequently puncturing the nacelle structure, which could adversely affect the safe landing of the airplane.

DATES: This AD becomes effective October 7, 2015.

The Director of the Federal Register approved the incorporation by reference of a certain publication listed in this AD as of October 7, 2015.

ADDRESSES: You may examine the AD docket on the Internet at *http://www.regulations.gov/#!docketDetail;D=FAA-2015-0680* or in person at the Docket Management Facility, U.S. Department of Transportation, Docket Operations, M–30, West Building Ground Floor, Room W12–140, 1200 New Jersey Avenue SE., Washington, DC.

For service information identified in this AD, contact Bombardier, Inc., Q-Series Technical Help Desk, 123 Garratt Boulevard, Toronto, Ontario M3K 1Y5, Canada; telephone 416–375–4000; fax 416–375–4539; email *thd.qseries@aero.bombardier.com;* Internet *http://www.bombardier.com.* You may view this referenced service information at the FAA, Transport Airplane Directorate, 1601 Lind Avenue SW., Renton, WA. For information on the availability of this material at the FAA, call 425–227–1221. It is also available on the Internet at *http://www.regulations.gov* by searching for and locating Docket No. FAA–2015–0680.

FOR FURTHER INFORMATION CONTACT: Cesar Gomez, Aerospace Engineer, Airframe and Mechanical Systems Branch, ANE–171, FAA, New York Aircraft Certification Office, 1600 Stewart Avenue, Suite 410, Westbury, NY 11590; telephone 516–228–7318; fax 516–794–5531.

SUPPLEMENTARY INFORMATION:

Discussion

We issued a notice of proposed rulemaking (NPRM) to amend 14 CFR part 39 by adding an AD that would apply to certain Bombardier, Inc. Model DHC–8–400, -401, and -402 airplanes. The NPRM published in the **Federal Register** on April 1, 2015 (80 FR 17366).

The Transport Canada Civil Aviation (TCCA), which is the aviation authority for Canada, has issued Canadian Airworthiness Directive CF–2014–18, dated June 19, 2014 (referred to after this as the Mandatory Continuing Airworthiness Information, or ''the MCAI''), to correct an unsafe condition for certain Bombardier, Inc. Model DHC–8–400, –401, and –402 airplanes. The MCAI states:

> There has been one (1) reported in-service incident where the main landing gear (MLG) parking brake hand pump lever was not properly secured in the right-hand (RH) side nacelle and became dislodged from its mounting bracket. During extension of the MLG, the unsecured lever shifted causing a fouling condition with the nacelle and subsequently puncturing the nacelle structure.

An investigation revealed that the safety restraint pin used to securely stow the lever is susceptible to mishandling. An unsecured parking brake hand pump lever could migrate from its stowed position and foul against the MLG, adversely affecting the safe landing of the aeroplane.

This [Canadian] AD mandates the removal of the MLG parking brake hand pump lever from the RH side nacelle.

You may examine the MCAI in the AD docket on the Internet at *http://www.regulations.gov/#!documentDetail;D=FAA-2015-0680-0002.*

Comments

We gave the public the opportunity to participate in developing this AD. We received no comments on the NPRM (80 FR 17366, April 1, 2015) or on the determination of the cost to the public.

Conclusion

We reviewed the relevant data and determined that air safety and the public interest require adopting this AD as proposed except for minor editorial changes. We have determined that these minor changes:

- Are consistent with the intent that was proposed in the NPRM (80 FR 17366, April 1, 2015) for correcting the unsafe condition; and
- Do not add any additional burden upon the public than was already proposed in the NPRM (80 FR 17366, April 1, 2015).

Related Service Information Under 1 CFR Part 51

Bombardier has issued the following service bulletins.

- Service Bulletin 84–32–99, Revision A, dated October 2, 2012. This service information describes procedures for incorporating ModSum 4–113723 by re-locating the hand pump lever of the parking brake from the right-hand side nacelle to the right-hand side equipment bay.
- Service Bulletin 84–32–118, dated April 8, 2014. This service information describes procedures for incorporating Bombardier ModSum 4–113803 by removing the hand pump lever of the parking brake from the right-hand side nacelle.

This service information is reasonably available because the interested parties have access to it through their normal course of business or by the means identified in the **ADDRESSES** section of this AD.

Costs of Compliance

We estimate that this AD affects 82 airplanes of U.S. registry.

We also estimate that it will take about 3 work-hours per product to comply with the basic requirements of this AD. The average labor rate is $85 per work-hour. Required parts will cost $0 per product. Based on these figures, we estimate the cost of this AD on U.S. operators to be $20,910, or $255 per product.

Authority for This Rulemaking

Title 49 of the United States Code specifies the FAA's authority to issue rules on aviation safety. Subtitle I, section 106, describes the authority of the FAA Administrator. ''Subtitle VII: Aviation Programs,'' describes in more detail the scope of the Agency's authority.

We are issuing this rulemaking under the authority described in ''Subtitle VII, Part A, Subpart III, Section 44701: General requirements.'' Under that section, Congress charges the FAA with promoting safe flight of civil aircraft in air commerce by prescribing regulations for practices, methods, and procedures the Administrator finds necessary for safety in air commerce. This regulation is within the scope of that authority because it addresses an unsafe condition that is likely to exist or develop on products identified in this rulemaking action.

Regulatory Findings

We determined that this AD will not have federalism implications under Executive Order 13132. This AD will not have a substantial direct effect on the States, on the relationship between the national government and the States, or on the distribution of power and responsibilities among the various levels of government.

For the reasons discussed above, I certify that this AD:

1. Is not a ''significant regulatory action'' under Executive Order 12866;
2. Is not a ''significant rule'' under the DOT Regulatory Policies and Procedures (44 FR 11034, February 26, 1979);
3. Will not affect intrastate aviation in Alaska; and
4. Will not have a significant economic impact, positive or negative, on a substantial number of small entities under the criteria of the Regulatory Flexibility Act.

Examining the AD Docket

You may examine the AD docket on the Internet at *http://www.regulations.gov/#!docketDetail;D=FAA-2015-0680;* or in person at the Docket Management Facility between 9 a.m. and 5 p.m., Monday through Friday, except Federal holidays. The AD docket contains this AD, the regulatory evaluation, any comments received, and other information. The street address for the Docket Operations office (telephone 800–647–5527) is in the **ADDRESSES** section.

List of Subjects in 14 CFR Part 39

Air transportation, Aircraft, Aviation safety, Incorporation by reference, Safety.

Adoption of the Amendment

Accordingly, under the authority delegated to me by the Administrator, the FAA amends 14 CFR part 39 as follows:

PART 39—AIRWORTHINESS DIRECTIVES

■ 1. The authority citation for part 39 continues to read as follows:

Authority: 49 U.S.C. 106(g), 40113, 44701.

§ 39.13 [Amended]

■ 2. The FAA amends § 39.13 by adding the following new airworthiness directive (AD):

2015–17–03 Bombardier, Inc.: Amendment 39–18236. Docket No. FAA–2015–0680; Directorate Identifier 2014–NM–165–AD.

(a) Effective Date

This AD becomes effective October 7, 2015.

(b) Affected ADs

None.

(c) Applicability

This AD applies to Bombardier, Inc. Model DHC–8–400, –401, and –402 airplanes, certificated in any category, serial numbers (S/N) 4001 through 4419 inclusive.

(d) Subject

Air Transport Association (ATA) of America Code 32, Landing Gear.

(e) Reason

This AD was prompted by a report of a main landing gear (MLG) parking brake becoming dislodged from its mounting bracket due to an improperly installed quick release pin of the hand pump lever. We are issuing this AD to prevent an unsecured lever from migrating from its stowed position, fouling against the MLG, and subsequently puncturing the nacelle structure, which could adversely affect the safe landing of the airplane.

(f) Compliance

Comply with this AD within the compliance times specified, unless already done.

(g) Incorporation of Modification Summary (ModSum) 4–113803

Within 3,000 flight hours or 18 months after the effective date of this AD, whichever occurs first: Incorporate Bombardier ModSum 4–113803 by removing the hand pump lever of the parking brake from the right-hand side nacelle, in accordance with the Accomplishment Instructions of

Bombardier Service Bulletin 84–32–118, dated April 8, 2014.

Note 1 to paragraph (g) of this AD: Re-installing the hand pump lever of the parking brake to the right-hand side equipment bay (Bombardier ModSum 4–113804) may be done at the operator's discretion.

(h) Optional Installation

Incorporation of ModSum 4–113723 by re-locating the hand pump lever of the parking brake from the right-hand side nacelle to the right-hand side equipment bay, in accordance with the Accomplishment Instructions of Bombardier Service Bulletin 84–32–99, Revision A, dated October 2, 2012, is acceptable for compliance with the modification specified in paragraph (g) of this AD, provided the incorporation of ModSum 4–113723 is done within the compliance time specified in paragraph (g) of this AD.

(i) Credit for Previous Actions

This paragraph provides credit for actions required by paragraph (h) of this AD, if those actions were performed before the effective date of this AD using Bombardier Service Bulletin 84–32–99, dated January 26, 2012, which is not incorporated by reference in this AD.

(j) Other FAA AD Provisions

The following provisions also apply to this AD:

(1) *Alternative Methods of Compliance (AMOCs):* The Manager, New York Aircraft Certification Office (ACO), ANE–170, FAA, has the authority to approve AMOCs for this AD, if requested using the procedures found in 14 CFR 39.19. In accordance with 14 CFR 39.19, send your request to your principal inspector or local Flight Standards District Office, as appropriate. If sending information directly to the ACO, send it to ATTN: Program Manager, Continuing Operational Safety, FAA, New York ACO, 1600 Stewart Avenue, Suite 410, Westbury, NY 11590; telephone 516–228–7300; fax 516–794–5531. Before using any approved AMOC, notify your appropriate principal inspector, or lacking a principal inspector, the manager of the local flight standards district office/ certificate holding district office. The AMOC approval letter must specifically reference this AD.

(2) *Contacting the Manufacturer:* For any requirement in this AD to obtain corrective actions from a manufacturer, the action must be accomplished using a method approved by the Manager, New York ACO, ANE–170, FAA; or Transport Canada Civil Aviation (TCCA); or Bombardier, Inc.'s TCCA Design Approval Organization (DAO). If approved by the DAO, the approval must include the DAO-authorized signature.

(k) Related Information

Refer to Mandatory Continuing Airworthiness Information (MCAI) Canadian Airworthiness Directive CF–2014–18, dated June 19, 2014, for related information. This MCAI may be found in the AD docket on the Internet at *http://www.regulations.gov/#!documentDetail;D=FAA-2015-0680-0002.*

(l) Material Incorporated by Reference

(1) The Director of the Federal Register approved the incorporation by reference (IBR) of the service information listed in this paragraph under 5 U.S.C. 552(a) and 1 CFR part 51.

(2) You must use this service information as applicable to do the actions required by this AD, unless this AD specifies otherwise.

(i) Bombardier Service Bulletin 84–32–99, Revision A, dated October 2, 2012.

(ii) Bombardier Service Bulletin 84–32–118, dated April 8, 2014.

(3) For service information identified in this AD, contact Bombardier, Inc., Q-Series Technical Help Desk, 123 Garratt Boulevard, Toronto, Ontario M3K 1Y5, Canada; telephone 416–375–4000; fax 416–375–4539; email *thd.qseries@aero.bombardier.com;* Internet *http://www.bombardier.com.*

(4) You may view this service information at the FAA, Transport Airplane Directorate, 1601 Lind Avenue SW., Renton, WA. For information on the availability of this material at the FAA, call 425–227–1221.

(5) You may view this service information that is incorporated by reference at the National Archives and Records Administration (NARA). For information on the availability of this material at NARA, call 202–741–6030, or go to: *http://www.archives.gov/federal-register/cfr/ibr-locations.html.*

Issued in Renton, Washington, on August 10, 2015.

Michael Kaszycki,

Acting Manager, Transport Airplane Directorate, Aircraft Certification Service.

[FR Doc. 2015–20583 Filed 9–1–15; 8:45 am]

BILLING CODE 4910–13–P

DEPARTMENT OF TRANSPORTATION

Federal Aviation Administration

14 CFR Part 39

[Docket No. FAA–2014–0777; Directorate Identifier 2014–NM–088–AD; Amendment 39–18257; AD 2015–17–24]

RIN 2120–AA64

Airworthiness Directives; The Boeing Company Airplanes

AGENCY: Federal Aviation Administration (FAA), DOT.

ACTION: Final rule.

SUMMARY: We are adopting a new airworthiness directive (AD) for certain The Boeing Company Model 787–8 airplanes. This AD was prompted by numerous reports of failures of the proximity sensor within the slat skew detection mechanism assembly (DMA) leading to slats up landing events. This AD requires replacing the slat skew DMAs with new slat skew DMAs, and marking the existing identification plates on the slat with the new part number. We are issuing this AD to prevent failure of the proximity sensor, which could result in the slats being shut down and a slats up high speed landing. This condition, in combination with abnormal landing conditions such as a short runway or adverse weather conditions, could result in a runway excursion.

DATES: This AD is effective October 7, 2015.

The Director of the Federal Register approved the incorporation by reference of a certain publication listed in this AD as of October 7, 2015.

ADDRESSES: For service information identified in this AD, contact Boeing Commercial Airplanes, Attention: Data & Services Management, P.O. Box 3707, MC 2H–65, Seattle, WA 98124–2207; telephone 206–544–5000, extension 1; fax 206–766–5680; Internet *https://www.myboeingfleet.com.* You may view this referenced service information at the FAA, Transport Airplane Directorate, 1601 Lind Avenue SW., Renton, WA. For information on the availability of this material at the FAA, call 425–227–1221. It is also available on the Internet at *http://www.regulations.gov* by searching for and locating Docket No. FAA–2014–0777.

Examining the AD Docket

You may examine the AD docket on the Internet at *http://www.regulations.gov* by searching for and locating Docket No. FAA–2014–0777; or in person at the Docket Management Facility between 9 a.m. and 5 p.m., Monday through Friday, except Federal holidays. The AD docket contains this AD, the regulatory evaluation, any comments received, and other information. The address for the Docket Office (phone: 800–647–5527) is Docket Management Facility, U.S. Department of Transportation, Docket Operations, M–30, West Building Ground Floor, Room W12–140, 1200 New Jersey Avenue SE., Washington, DC 20590.

FOR FURTHER INFORMATION CONTACT: Douglas Tsuji, Senior Aerospace Engineer, Systems and Equipment Branch, ANM–130S, FAA, Seattle Aircraft Certification Office, 1601 Lind Avenue SW., Renton, WA 98057–3356; telephone: 425–917–6546; fax: 425–917–6590; email: *douglas.tsuji@faa.gov.*

SUPPLEMENTARY INFORMATION:

Discussion

We issued a notice of proposed rulemaking (NPRM) to amend 14 CFR part 39 by adding an AD that would apply to certain The Boeing Company

Model 787–8 airplanes. The NPRM published in the **Federal Register** on November 28, 2014 (79 FR 70802). The NPRM was prompted by numerous reports of failures of the proximity sensor within the slat skew DMA leading to slats up landing events. The NPRM proposed to require replacing the slat skew DMAs with new slat skew DMAs, and marking the existing identification plates on the slat with the new part number. We are issuing this AD to prevent failure of the proximity sensor, which could result in the slats being shut down and a slats up high speed landing. This condition, in combination with abnormal landing conditions such as a short runway or adverse weather conditions, could result in a runway excursion.

Comments

We gave the public the opportunity to participate in developing this AD. The following presents the comments received on the NPRM (79 FR 70802, November 28, 2014) and the FAA's response to each comment.

Support for the NPRM (79 FR 70802, November 28, 2014)

United Airlines (UAL) stated that it supports the NPRM (79 FR 70802, November 28, 2014).

Requests To Correct the Location of the Part Numbers Affected

Boeing and UAL requested a correction of the location of the identified part numbers affected in paragraphs (h)(2) and (h)(3) of the proposed AD (79 FR 70802, November 28, 2014). UAL stated that the part numbers affected in paragraphs (h)(2) and (h)(3) of the proposed AD are the wing leading edge slat assemblies, not the DMA. Boeing also commented that the part numbers are for a complete slat assembly (structure with DMA installed) and not just the DMA.

We agree with the request. The intent of this AD is to prohibit installation of a defective slat skew DMA. Boeing Alert Service Bulletin B787–81205–SB270021–00, Issue 001, dated March 20, 2014, provides instructions to modify the existing slat assembly by replacing the defective slat skew DMA and then marking the existing slat assembly identification plate with a new part number. Therefore, we have revised paragraphs (h)(2) and (h)(3) of this AD to remove the text ''slat skew DMA in'' and just refer to the existing part numbers of the slat assembly, which contain the defective slat skew DMA.

Conclusion

We reviewed the relevant data, considered the comments received, and determined that air safety and the public interest require adopting this AD with the changes described previously and minor editorial changes. We have determined that these minor changes:

- Are consistent with the intent that was proposed in the NPRM (79 FR 70802, November 28, 2014) for correcting the unsafe condition; and
- Do not add any additional burden upon the public than was already proposed in the NPRM (79 FR 70802, November 28, 2014).

We also determined that these changes will not increase the economic burden on any operator or increase the scope of this AD.

Related Service Information Under 1 CFR Part 51

We reviewed Boeing Alert Service Bulletin B787–81205–SB270021–00, Issue 001, dated March 20, 2014. The service information describes procedures for replacing the slat skew DMAs with new slat skew DMAs, and marking the existing identification plates on the slat with the new part number. This service information is reasonably available because the interested parties have access to it through their normal course of business or by the means identified in the **ADDRESSES** section of this AD.

Costs of Compliance

We estimate that this AD affects 15 airplanes of U.S. registry.

We estimate the following costs to comply with this AD:

ESTIMATED COSTS

Action	Labor cost	Parts cost	Cost per product	Cost on U.S. operators
Replacement	11 work-hours X $85 per hour = $935	$0	$935	$14,025

Authority for This Rulemaking

Title 49 of the United States Code specifies the FAA's authority to issue rules on aviation safety. Subtitle I, section 106, describes the authority of the FAA Administrator. Subtitle VII: Aviation Programs, describes in more detail the scope of the Agency's authority.

We are issuing this rulemaking under the authority described in Subtitle VII, Part A, Subpart III, Section 44701: ''General requirements.'' Under that section, Congress charges the FAA with promoting safe flight of civil aircraft in air commerce by prescribing regulations for practices, methods, and procedures the Administrator finds necessary for safety in air commerce. This regulation is within the scope of that authority because it addresses an unsafe condition that is likely to exist or develop on products identified in this rulemaking action.

Regulatory Findings

This AD will not have federalism implications under Executive Order 13132. This AD will not have a substantial direct effect on the States, on the relationship between the national government and the States, or on the distribution of power and responsibilities among the various levels of government.

For the reasons discussed above, I certify that this AD:

(1) Is not a ''significant regulatory action'' under Executive Order 12866,

(2) Is not a ''significant rule'' under DOT Regulatory Policies and Procedures (44 FR 11034, February 26, 1979),

(3) Will not affect intrastate aviation in Alaska, and

(4) Will not have a significant economic impact, positive or negative, on a substantial number of small entities under the criteria of the Regulatory Flexibility Act.

List of Subjects in 14 CFR Part 39

Air transportation, Aircraft, Aviation safety, Incorporation by reference, Safety.

Adoption of the Amendment

Accordingly, under the authority delegated to me by the Administrator, the FAA amends 14 CFR part 39 as follows:

PART 39—AIRWORTHINESS DIRECTIVES

■ 1. The authority citation for part 39 continues to read as follows:

Authority: 49 U.S.C. 106(g), 40113, 44701.

§ 39.13 [Amended]

■ 2. The FAA amends § 39.13 by adding the following new airworthiness directive (AD):

2015–17–24 The Boeing Company: Amendment 39–18257 ; Docket No. FAA–2014–0777; Directorate Identifier 2014–NM–088–AD.

(a) Effective Date

This AD is effective October 7, 2015.

(b) Affected ADs

None.

(c) Applicability

This AD applies to The Boeing Company Model 787–8 airplanes, certificated in any category, as identified in Boeing Alert Service Bulletin B787–81205–SB270021–00, Issue 001, dated March 20, 2014.

(d) Subject

Air Transport Association (ATA) of America Code 27, Flight Controls.

(e) Unsafe Condition

This AD was prompted by numerous reports of failures of the proximity sensor within the slat skew detection mechanism assembly (DMA) leading to slats up landing events. We are issuing this AD to prevent failure of the proximity sensor, which could result in the slats being shut down and a slats up high speed landing. This condition, in combination with abnormal landing conditions such as a short runway or adverse weather conditions, could result in a runway excursion.

(f) Compliance

Comply with this AD within the compliance times specified, unless already done.

(g) Replacement

Within 24 months after the effective date of this AD: Replace the slat skew DMAs in slat number 5 and slat number 8 with new slat skew DMAs, and mark the existing identification plates on the slat with the new part number, in accordance with the Accomplishment Instructions of Boeing Alert Service Bulletin B787–81205–SB270021–00, Issue 001, dated March 20, 2014.

(h) Parts Installation Prohibitions

(1) As of the effective date of this AD, no person may install a slat skew DMA, part number P683A0001–03, on any airplane.

(2) As of the effective date of this AD, no person may install on any airplane, a slat assembly number 5, having part number 145Z0201–11–8, 145Z0201–21–4, 145Z0201–21–3, 145Z0201–21–5, 145Z0201–21–8, 145Z0201–21–9, 145Z0201–31-1, or 145Z0201–33-1.

(3) As of the effective date of this AD, no person may install on any airplane, a slat assembly number 8, having part number 145Z0201–12–8, 145Z0201–22–4, 145Z0201–22–3, 145Z0201–22–5, 145Z0201–22–8, 145Z0201–22–9, 145Z0201–32–1, or 145Z0201–34-1.

(i) Alternative Methods of Compliance (AMOCs)

(1) The Manager, Seattle Aircraft Certification Office (ACO), FAA, has the authority to approve AMOCs for this AD, if requested using the procedures found in 14 CFR 39.19. In accordance with 14 CFR 39.19, send your request to your principal inspector or local Flight Standards District Office, as appropriate. If sending information directly to the manager of the ACO, send it to the attention of the person identified in paragraph (j) of this AD. Information may be emailed to: *9-ANM-Seattle-ACO-AMOC-Requests@faa.gov.*

(2) Before using any approved AMOC, notify your appropriate principal inspector, or lacking a principal inspector, the manager of the local flight standards district office/ certificate holding district office.

(j) Related Information

For more information about this AD, contact Douglas Tsuji, Senior Aerospace Engineer, Systems and Equipment Branch, ANM–130S, FAA, Seattle Aircraft Certification Office, 1601 Lind Avenue SW., Renton, WA 98057–3356; telephone: 425–917–6546; fax: 425–917–6590; email: *douglas.tsuji@faa.gov.*

(k) Material Incorporated by Reference

(1) The Director of the Federal Register approved the incorporation by reference (IBR) of the service information listed in this paragraph under 5 U.S.C. 552(a) and 1 CFR part 51.

(2) You must use this service information as applicable to do the actions required by this AD, unless the AD specifies otherwise.

(i) Boeing Alert Service Bulletin B787–81205–SB270021–00, Issue 001, dated March 20, 2014.

(ii) Reserved.

(3) For Boeing service information identified in this AD, contact Boeing Commercial Airplanes, Attention: Data & Services Management, P.O. Box 3707, MC 2H–65, Seattle, WA 98124–2207; telephone 206–544–5000, extension 1; fax 206–766–5680; Internet *https://www.myboeingfleet.com.*

(4) You may view this referenced service information at the FAA, Transport Airplane Directorate, 1601 Lind Avenue SW., Renton, WA. For information on the availability of this material at the FAA, call 425–227–1221.

(5) You may view this service information that is incorporated by reference at the National Archives and Records Administration (NARA). For information on the availability of this material at NARA, call 202–741–6030, or go to: *http://www.archives.gov/federal-register/cfr/ibr-locations.html.*

Issued in Renton, Washington, on August 21, 2015.

Kevin Hull,

Acting Manager, Transport Airplane Directorate, Aircraft Certification Service.

[FR Doc. 2015–21474 Filed 9–1–15; 8:45 am]

BILLING CODE 4910–13–P

DEPARTMENT OF TRANSPORTATION

Federal Aviation Administration

14 CFR Part 39

[Docket No. FAA–2014–0779; Directorate Identifier 2014–NM–052–AD; Amendment 39–18260; AD 2015–18–02]

RIN 2120–AA64

Airworthiness Directives; Lockheed Martin Corporation/Lockheed Martin Aeronautics Company Airplanes

AGENCY: Federal Aviation Administration (FAA), DOT.

ACTION: Final rule; request for comments.

SUMMARY: We are adopting a new airworthiness directive (AD) for all Lockheed Martin Corporation/Lockheed Martin Aeronautics Company Model 382, 382B, 382E, 382F, and 382G airplanes. This AD requires replacing the center wing box (CWB) and certain outer wings. This AD was prompted by an evaluation by the design approval holder (DAH) indicating that the CWB and outer wings are subject to widespread fatigue damage (WFD). We are issuing this AD to prevent fatigue cracking of the outer wings and the lower surface of the CWB, which could result in reduced structural integrity of the airplane.

DATES: This AD is effective September 17, 2015.

The Director of the Federal Register approved the incorporation by reference of certain publications listed in this AD as of September 17, 2015.

We must receive comments on this AD by October 19, 2015.

ADDRESSES: You may send comments, using the procedures found in 14 CFR 11.43 and 11.45, by any of the following methods:

- *Federal eRulemaking Portal:* Go to *http://www.regulations.gov.* Follow the instructions for submitting comments.
- *Fax:* 202–493–2251.
- *Mail:* U.S. Department of Transportation, Docket Operations, M–30, West Building Ground Floor, Room W12–140, 1200 New Jersey Avenue SE., Washington, DC 20590.
- *Hand Delivery:* U.S. Department of Transportation, Docket Operations, M–

30, West Building Ground Floor, Room W12–140, 1200 New Jersey Avenue SE., Washington, DC 20590, between 9 a.m. and 5 p.m., Monday through Friday, except Federal holidays.

For service information identified in this AD, contact Lockheed Martin Corporation/Lockheed Martin Aeronautics Company, Airworthiness Office, Dept. 6A0M, Zone 0252, Column P–58, 86 S. Cobb Drive, Marietta, GA 30063; telephone 770–494–5444; fax 770–494–5445; email *ams.portal@lmco.com*; Internet *http://www.lockheedmartin.com/ams/tools/TechPubs.html*. You may view this referenced service information at the FAA, Transport Airplane Directorate, 1601 Lind Avenue SW., Renton, WA. For information on the availability of this material at the FAA, call 425–227–1221. It is also available on the Internet at *http://www.regulations.gov* by searching for and locating Docket No. FAA–2014–0779.

Examining the AD Docket

You may examine the AD docket on the Internet at *http://www.regulations.gov* by searching for and locating Docket No. FAA–2014–0779; or in person at the Docket Management Facility between 9 a.m. and 5 p.m., Monday through Friday, except Federal holidays. The AD docket contains this AD, the regulatory evaluation, any comments received, and other information. The street address for the Docket Office (phone: 800–647–5527) is in the **ADDRESSES** section. Comments will be available in the AD docket shortly after receipt.

FOR FURTHER INFORMATION CONTACT: Carl Gray, Aerospace Engineer, Airframe Branch, ACE–117A, FAA, Atlanta Aircraft Certification Office (ACO), 1701 Columbia Avenue, College Park, GA 30337; phone: 404–474–5554; fax: 404–474–5605; email: *Carl.W.Gray@faa.gov.*

SUPPLEMENTARY INFORMATION:

Discussion

We issued two notices of proposed rulemaking (NPRMs) to amend 14 CFR part 39 by adding ADs that would apply to all Lockheed Martin Corporation/Lockheed Martin Aeronautics Company Model 382, 382B, 382E, 382F, and 382G airplanes. The NPRMs were prompted by an evaluation by the design approval holder (DAH) indicating that certain structure is subject to widespread fatigue damage (WFD). We proposed the NPRMs to address fatigue cracking that could result in reduced structural integrity of the airplane.

One NPRM (Directorate Identifier 2013–NM–218–AD, Docket No. FAA–2014–0427), published in the **Federal Register** on July 1, 2014 (79 FR 37248), was prompted by the determination that the CWB is subject to WFD. This NPRM proposed to require repetitive inspections and corrective actions for damage of the lower surface of the center wing box; and replacement of the center wing box, which would terminate the repetitive inspections.

The other NPRM (Directorate Identifier 2014–NM–052–AD, Docket No. FAA–2014–0779) is the subject of this AD. This NPRM, published in the **Federal Register** on December 1, 2014 (79 FR 71033), was prompted by the determination that the outer wings are subject to WFD. This NPRM proposed to require replacing certain outer wings with new or certain serviceable outer wings.

Actions Since Previous Rulemaking

We have subsequently determined that the proposed compliance time for replacing the CWB and outer wings would not adequately address the unsafe condition. The risk of undetected WFD rises rapidly for certain outer wings that have accumulated 30,000 total flight hours and for CWBs that have accumulated 50,000 total flight hours.

Lockheed, commenting on the NPRMs for Directorate Identifier 2013–NM–218–AD (79 FR 37248, July 1, 2014) and Directorate Identifier 2014–NM–052–AD (79 FR 71033, December 1, 2014), also considered the proposed grace periods (24 months and 30 months, respectively) for replacing the CWBs and outer wings inappropriate in relation to the probable risk of the unsafe condition. Based on its engineering analysis, Lockheed concluded that the most prudent way to ensure fleet safety would be to ground affected Model 382 airplanes until over-threshold CWBs and outer wings are replaced.

Therefore, in light of the urgency of the unsafe condition identified in this AD, we have determined that the unsafe condition associated with both NPRMs—Directorate Identifier 2013–NM–218–AD (79 FR 37248, July 1, 2014) and Directorate Identifier 2014–NM–052–AD (79 FR 71033, December 1, 2014)—necessitates the immediate adoption of this AD. We have revised both AD actions as follows:

- For the AD action related to Directorate Identifier 2013–NM–218–AD (79 FR 37248, July 1, 2014): We are considering issuing the final rule without the requirement to replace the CWB.
- For this AD: We have added a requirement to replace the CWB, with a shorter grace period (for airplanes over the 50,000-flight-hour threshold) than was provided in the NPRM for Directorate Identifier 2013–NM–218–AD (79 FR 38249, July 1, 2014). And, for the outer wing replacement, this AD provides a shorter grace period (for airplanes over the 30,000-flight-hour threshold) than was provided in the NPRM for this AD. This AD therefore requires replacement of both the CWB and outer wings.

Comments on NPRM for Directorate Identifier 2013–NM–218–AD (79 FR 37248, July 1, 2014)

Other commenters had expressed concern about the urgency of the unsafe condition and the compliance times for the CWB replacement proposed in the NPRM for Directorate Identifier 2013–NM–218–AD (79 FR 37248, July 1, 2014). The following presents the comments that are related to the proposed CWB replacement requirement (which has been moved to this final rule) and the FAA's response to those comments.

Requests To Revise Compliance Time for CWB Replacement

Lockheed requested that we remove the grace period from the NPRM (79 FR 37248, July 1, 2014) so that any airplane with a CWB that has accumulated over 50,000 total flight hours would be grounded until the CWB is replaced. Lockheed stated the level of risk rises rapidly beyond 50,000 total flight hours due to increasing probabilities of the presence of undetected WFD.

Lynden Air Cargo (Lynden) suggested a sliding scale of compliance times, based on time accumulated on the CWB, instead of the proposed compliance time, with the highest-risk CWBs to be removed from service earliest.

Safair questioned the two-year grace period in light of the safety concern associated with this final rule. The commenter stated that the compliance time, which appears to allow the DAH time to manufacture new wings, appears to be commercially driven. Safair added that the DAH, which has considered the unsafe condition associated with this AD to be a significant safety risk, has strongly advised operators to ground airplanes with center wings having more than 50,000 total flight hours.

As explained previously under ''Actions Since Previous Rulemaking,'' we have determined that the proposed compliance time for replacing the CWB would not adequately address the unsafe condition. Therefore, we have shortened the proposed grace period for the CWB replacement, in paragraph (k)(2) of this AD, to 30 days or 50 flight

hours (whichever occurs later) for any CWB that has accumulated 50,000 or more total flight hours.

Request To Revise Applicability

Lynden questioned whether the FAA considered the safety risk factor for ''restricted category type certificated Model C–130A through H airplanes'' and whether those airplanes should be included in the applicability.

We did consider the safety risk factor for Model C–130 airplanes. We issued restricted-category type certificates only for Model C–130A and C–130B airplanes, and these are low-usage airplanes. The wings on Model C–130A airplanes are different from those of other models. In addition, the CWBs have previously been replaced on all Model C–130A airplanes. There are no civil-registered Model C–130B airplanes in service. We have not changed this AD in this regard. However, we might consider further rulemaking for Model C–130 airplanes.

Request To Allow Use of Certain Other Service Information

Lynden requested that we revise the NPRM (79 FR 37248, July 1, 2014), for the CWB replacement requirement, to allow use of Lockheed Service Bulletin 382–57–90, dated November 5, 2010, which is specific to Lynden's fleet. Lynden explained that Lockheed Service Bulletin 382–57–90, dated November 5, 2010, includes all the detailed installation procedures, whereas Lockheed Service Bulletin 382–57–94, dated December 3, 2013, is more generic and could involve additional nonrecurring engineering and possible alternative methods of compliance (AMOCs) for each specific CWB variant to accommodate production changes and individual airplane peculiarities. Lynden explained that those differences have already been addressed in Lockheed Service Bulletin 382–57–90, dated November 5, 2010.

We agree with the commenter's request, for the reasons provided by the commenter. We have included the requested provision in paragraph (l) of this AD.

Request To Revise Cost Estimates

Safair requested that we revise the CWB replacement costs provided in the NPRM for Directorate Identifier 2013–NM–218–AD (79 FR 37248, July 1, 2014). The commenter stated that he was ''unable to achieve this level of pricing'' from Lockheed, and estimated that the replacement would take 15,000 work-hours, at $8.25 million per airplane.

We do not agree to revise the per-airplane cost estimate. We have received no revised cost information from Lockheed. The cost estimates provided in this final rule are also based on costs provided by operators that have already replaced their CWBs. We have not changed this final rule regarding this issue.

Statement Regarding Impact on Small Entities

Safair questioned the statement in the NPRM (79 FR 37248, July 1, 2014) that the AD ''[w]ill not have a significant economic impact, positive or negative, on a substantial number of small entities under the criteria of the Regulatory Flexibility Act.'' The commenter stated that the NPRM will have a significant impact on aid and relief efforts in the Third World where the Lockheed Model 382 is a significant contributor to food and aid distribution. This impact on the cost per flight hour will result in less aid delivered.

As specified under the Regulatory Findings section, this AD does have a significant economic impact on small entities, based on the Initial Regulatory Flexibility Analysis included in the NPRM for Directorate Identifier 2014–NM–052–AD (79 FR 71033, December 1, 2014). However, the FAA has not prepared a regulatory flexibility analysis for this AD. In accordance with § 603(a) of the Regulatory Flexibility Act, such analyses are required only for rules for which a notice of proposed rulemaking is required by 5 U.S.C. 553. Because of the urgency of this action, as discussed later in this preamble, we find that notice and comment procedures are not required for this rulemaking.

Request To Allow Replacement With Serviceable CWB

Safair requested that we revise the NPRM (79 FR 37248, July 1, 2014) to allow replacement of the CWB with a serviceable CWB that has accumulated less than 50,000 total flight hours, or that has more than 25,000 flight hours of usage remaining. The commenter noted that operators have acquired pre-owned center wings in anticipation of this NPRM.

We partially agree with the request. The service information for the CWB replacement (Lockheed Service Bulletins 382–57–94, dated December 3, 2013; and 382–57–90, dated November 5, 2010); provides procedures for installing only a CWB that is new. Replacement with anything other than a new CWB would therefore require using a method specific to each airplane and approved by the FAA. Paragraph (j)(1) of this AD specifies replacement with a new CWB using the specified service information, and paragraph (j)(2) of this AD specifies replacement with a serviceable CWB using a method approved by the FAA.

Request To Provide Credit for Previous CWB Replacement

Safair requested that CWBs replaced before the release of Lockheed Service Bulletin 382–57–94, dated December 3, 2013, be excluded from the CWB replacement requirement. Safair stated that Lockheed has replaced CWBs on civil airplanes using alternative processes since the 1970s—before the release of Lockheed Service Bulletin 382–57–94, dated December 3, 2013. Safair explained that the industry supporting the military fleet of Model C–130 airplanes has significant experience and exposure to center wing replacements via other means, and should be credited for the experience and ability to develop sound processes.

We disagree with the request to exclude those airplanes with previously replaced CWBs. Any replacement CWB that reaches 50,000 total flight hours before the airplane reaches its limit of validity (LOV) of 75,000 total flight hours would need to be replaced again. As explained previously, paragraph (j)(2) of this AD allows replacement of the CWB with a serviceable CWB using a method approved by the FAA. This AD is based on the life of the CWB. If it can be shown that the CWB on the airplane has accumulated less than 50,000 total flight hours, then there is no need to replace the CWB until that wing reaches 50,000 total flight hours. We have not changed this final rule regarding this issue.

Additional Change to NPRM for Directorate Identifier 2014–NM–052–AD (79 FR 71033, December 1, 2014)

Paragraph (i) of the NPRM (79 FR 71033, December 1, 2014) provided certain instructions for wings with previous military usage. We have revised this wording in this AD to clarify the instructions for contacting the FAA.

Other Relevant Rulemaking

The information in this section is restated (with minor editorial changes) from the NPRM for Directorate Identifier 2013–NM–218–AD (79 FR 37248, July 1, 2014) regarding the requirement to replace the CWBs. Replacement of the CWBs, as required by this AD, affects the requirements of certain other ADs:

- AD 2011–09–04, Amendment 39–16666 (76 FR 28626, May 18, 2011), requires repetitive inspections for any damage to the lower surface of the CWB,

and corrective actions if necessary. AD 2011–09–04 was issued to detect and correct fatigue cracks of the lower surface of the CWB, which could result in the structural failure of the wings.

• AD 2011–15–02, Amendment 39–16749 (76 FR 41647, July 15, 2011), superseded AD 2008–20–01, Amendment 39–15680 (73 FR 56464, September 29, 2008). AD 2011–15–02 requires revising the maintenance program by incorporating new airworthiness limitations for fuel tank systems to satisfy the requirements of Special Federal Aviation Regulation (SFAR) No. 88 (''SFAR 88,'' Amendment 21–78, and subsequent Amendments 21–82 (67 FR 57490, September 10, 2002) and 21–83 (67 FR 72830, December 9, 2002)), which is part of a regulation titled ''Transport Airplane Fuel Tank System Design Review, Flammability Reduction, and Maintenance and Inspection Requirements'' (66 FR 23086, May 7, 2001). AD 2011–15–02 also continues to require accomplishing certain fuel system modifications, initial inspections of certain repetitive fuel system limitations to phase in those inspections, and repair if necessary. AD 2011–15–02 corrects certain part number references, adds an additional inspection area and, for certain airplanes, requires certain actions to be reaccomplished according to revised service information. AD 2011–15–02 was issued to prevent the potential for ignition sources inside fuel tanks caused by latent failures, alterations, repairs, or maintenance actions, which, in combination with flammable fuel vapors, could result in a fuel tank explosion and consequent loss of the airplane.

• AD 2012–06–09, Amendment 39–16990 (77 FR 21404, April 10, 2012), requires revising the maintenance/inspection program to include inspections that will give no less than the required damage tolerance analysis for each principal structural element (PSE), doing repetitive inspections to detect cracks of all PSEs, and repairing cracked structure. We issued AD 2012–06–09 to maintain the continued structural integrity of the fleet.

• AD 2015–05–08, Amendment 39–18118 (80 FR 14805, March 20, 2015), requires repetitive inspections of the upper and lower rainbow fittings on the outer wing to detect cracks propagating from fasteners attaching the fittings to skin panels, and related investigative and corrective actions if necessary; and replacement of the upper and lower rainbow fittings on the outer wing. We issued AD 2015–05–08 to prevent fatigue cracking of the upper and lower rainbow fittings on the outer wing and skin-panel-to-fitting fastener holes, which could result in reduced structural integrity of the airplane and possible separation of the wing from the airplane.

• AD 2015–06–08, Amendment 39–18126 (80 FR 19013, April 9, 2015), requires repetitive eddy current inspections to detect cracks in the center wing upper and lower rainbow fittings, and corrective actions if necessary; and repetitive replacements of rainbow fittings, which would extend the repetitive interval for the next inspection. We issued this AD to detect and correct fatigue cracks, which could grow large and lead to the failure of the fitting and a catastrophic failure of the center wing.

FAA's Determination

We are issuing this AD because we evaluated all the relevant information and determined that the unsafe condition described previously is likely to exist or develop in other products of the same type design.

AD Requirements

This AD requires replacing the CWB and certain outer wings.

FAA's Justification and Determination of the Effective Date

An unsafe condition exists that requires the immediate adoption of this AD. The FAA has found that the risk to the flying public justifies waiving notice and comment prior to adoption of this rule because fatigue cracking of the outer wing and the lower surface of the CWB could result in reduced structural integrity of the airplane. Therefore, we find that notice and opportunity for prior public comment are impracticable and that good cause exists for making this amendment effective in less than 30 days.

Explanation of Compliance Time

The compliance times for the replacements required by this AD for addressing WFD were established to ensure that discrepant structure is replaced before WFD develops in airplanes. Standard inspection techniques cannot be relied on to detect WFD before it becomes a hazard to flight. We will not grant any extensions of the compliance time to complete any AD-mandated service bulletin related to WFD without extensive new data that would substantiate and clearly warrant such an extension.

Comments Invited

This AD is a final rule that involves requirements affecting flight safety and was not preceded by notice and an opportunity for public comment. However, we invite you to send any written data, views, or arguments about this AD. Send your comments to an address listed under the **ADDRESSES** section. Include the docket number FAA–2014–0779 and Directorate Identifier 2014–NM–052–AD at the beginning of your comments. We specifically invite comments on the overall regulatory, economic, environmental, and energy aspects of this AD. We will consider all comments received by the closing date and may amend this AD because of those comments.

We will post all comments we receive, without change, to *http://www.regulations.gov*, including any personal information you provide. We will also post a report summarizing each substantive verbal contact we receive about this AD.

Related Service Information Under 1 CFR Part 51

We reviewed the following service information.

• Lockheed Martin Aeronautics Company Service Bulletin 382–57–90, dated November 5, 2010, which describes procedures for replacing the CWB with a new CWB.

• Lockheed Martin Aeronautics Company Service Bulletin 382–57–94, dated December 3, 2013, which also describes procedures for replacing the CWB with a new CWB.

• Lockheed Martin Aeronautics Company Service Bulletin 382–57–96, dated December 16, 2013, which describes procedures for replacing certain outer wings with new or certain serviceable outer wings.

This service information is reasonably available because the interested parties have access to it through their normal course of business or by the means identified in the **ADDRESSES** section of this AD.

Costs of Compliance

We estimate that this AD affects 20 airplanes of U.S. registry. We estimate the following costs to comply with this AD:

ESTIMATED COSTS

Action	Labor cost	Parts cost	Cost per product	Cost on U.S. operators
CWB replacement	4,800 work-hours × $85 per hour = $408,000	$5,000,000	$5,408,000	$108,160,000
Outer wing replacement	1,500 work-hours × 85 per hour = 127,500	8,000,000	8,127,500	162,550,000

Authority for This Rulemaking

Title 49 of the United States Code specifies the FAA's authority to issue rules on aviation safety. Subtitle I, section 106, describes the authority of the FAA Administrator. ''Subtitle VII: Aviation Programs'' describes in more detail the scope of the Agency's authority.

We are issuing this rulemaking under the authority described in Subtitle VII, Part A, Subpart III, Section 44701: ''General requirements.'' Under that section, Congress charges the FAA with promoting safe flight of civil aircraft in air commerce by prescribing regulations for practices, methods, and procedures the Administrator finds necessary for safety in air commerce. This regulation is within the scope of that authority because it addresses an unsafe condition that is likely to exist or develop on products identified in this rulemaking action.

Regulatory Findings

This AD will not have federalism implications under Executive Order 13132. This AD will not have a substantial direct effect on the States, on the relationship between the national government and the States, or on the distribution of power and responsibilities among the various levels of government.

For the reasons discussed above, I certify that this AD:

(1) Is not a ''significant regulatory action'' under Executive Order 12866,

(2) Is not a ''significant rule'' under DOT Regulatory Policies and Procedures (44 FR 11034, February 26, 1979),

(3) Will not affect intrastate aviation in Alaska, and

(4) Will have a significant economic impact, positive or negative, on a substantial number of small entities under the criteria of the Regulatory Flexibility Act.

List of Subjects in 14 CFR Part 39

Air transportation, Aircraft, Aviation safety, Incorporation by reference, Safety.

Adoption of the Amendment

Accordingly, under the authority delegated to me by the Administrator, the FAA amends 14 CFR part 39 as follows:

PART 39—AIRWORTHINESS DIRECTIVES

■ 1. The authority citation for part 39 continues to read as follows:

Authority: 49 U.S.C. 106(g), 40113, 44701.

§ 39.13 [Amended]

■ 2. The FAA amends § 39.13 by adding the following new airworthiness directive (AD):

2015–18–02 Lockheed Martin Corporation/Lockheed Martin Aeronautics Company: Amendment 39–18260; Docket No. FAA–2014–0779; Directorate Identifier 2014–NM–052–AD.

(a) Effective Date

This AD is effective September 17, 2015.

(b) Affected ADs

None.

(c) Applicability

This AD applies to all Lockheed Martin Corporation/Lockheed Martin Aeronautics Company Model 382, 382B, 382E, 382F, and 382G airplanes, certificated in any category.

(d) Subject

Air Transport Association (ATA) of America Code 57, Wings.

(e) Unsafe Condition

This AD was prompted by an evaluation by the design approval holder (DAH) indicating that the outer wings and center wing box (CWB) are subject to widespread fatigue damage (WFD). We are issuing this AD to prevent fatigue cracking of the outer wings and the lower surface of the CWB, which could result in reduced structural integrity of the airplane.

(f) Compliance

Comply with this AD within the compliance times specified, unless already done.

(g) Outer Wing Replacement

For airplanes with outer wings having serial numbers (S/Ns) 3946 through 4541 inclusive, or manufacturing end product (MEP) replacement outer wings 14Y series having part numbers (P/Ns) 388021–9/–10: At the later of the times specified in paragraphs (g)(1) and (g)(2) of this AD, except as specified in paragraph (i) of this AD, replace each outer wing with a replacement wing specified in paragraph (h) of this AD, in accordance with the Accomplishment Instructions of Lockheed Service Bulletin 382–57–96, dated December 16, 2013.

(1) Before the outer wing accumulates 30,000 total flight hours.

(2) Within 30 days or 50 flight hours after the effective date of this AD, whichever occurs later.

(h) Acceptable Replacement Outer Wings

(1) Outer wings having S/Ns 3946 through 4541 inclusive, and MEP replacement outer wings 14Y series having P/Ns 388021–9/–10, are acceptable for the outer wing replacement required by paragraph (g) of this AD, provided that the replacement outer wing has accumulated less than 30,000 total flight hours. The replacement outer wing must be replaced before it accumulates 30,000 total flight hours, as required by paragraph (g) of this AD. Lockheed Service Bulletin 382–57–96, dated December 16, 2013, describes an option to salvage certain system components when replacing an outer wing. If salvaged components are used in a replacement wing, an operator may need to comply with the following:

(i) AD 2011–09–04, Amendment 39–16666 (76 FR 28626, May 18, 2011);

(ii) AD 2011–15–02, Amendment 39–16749 (76 FR 41647, July 15, 2011);

(iii) AD 2012–06–09, Amendment 39–16990 (77 FR 21404, April 10, 2012);

(iv) AD 2015–05–08, Amendment 39–18118 (80 FR 14805, March 20, 2015); and

(v) AD 2015–06–08, Amendment 39–18126 (80 FR 19013, April 9, 2015).

(2) Outer wings having S/Ns 4542 and subsequent, and MEP replacement outer wings except for 14Y series having P/Ns 388021–9/–10, that have accumulated less than 75,000 total flight hours, are acceptable for the outer wing replacement required by paragraph (g) of this AD.

(i) Wings With Previous Military Usage

For airplanes that have any outer wing with previous military usage: Within 30 days after the effective date of this AD, contact the Manager, Atlanta Aircraft Certification Office (ACO), FAA, to determine a compliance time for accomplishing the actions required by paragraph (g) of this AD, by using a method approved in accordance with the procedures specified in paragraph (n) of this AD.

(j) CWB Replacement

At the applicable time specified in paragraphs (k)(1) and (k)(2) of this AD: Replace the CWB, as specified in paragraph (j)(1) or (j)(2) of this AD.

(1) Replace the CWB with a new CWB, in accordance with the Accomplishment Instructions of Lockheed Service Bulletin 382–57–94, dated December 3, 2013. Although a note in the Accomplishment Instructions of Lockheed Service Bulletin 382–57–94, dated December 3, 2013, instructs operators to contact Lockheed if any assistance is needed in accomplishing the actions specified in the service information, any deviation from the instructions provided

in the service information must be approved in accordance with the procedures specified in paragraph (n) of this AD.

(2) Replace the CWB with a serviceable CWB using a method approved in accordance with the procedures specified in paragraph (n) of this AD.

(k) Compliance Time for CWB Replacement

Replace the CWB at the later of the times specified in paragraphs (k)(1) and (k)(2) of this AD.

(1) Before the CWB accumulates 50,000 total flight hours.

(2) Within 30 days or 50 flight hours after the effective date of this AD, whichever occurs later.

(l) Alternative Service Information for CWB Replacement

For airplanes identified in Lockheed Service Bulletin 382–57–90, dated November 5, 2010: Replacement of the CWB with a new CWB, in accordance with the Accomplishment Instructions of Lockheed Service Bulletin 382–57–90, dated November 5, 2010, is acceptable for compliance with the requirements of paragraph (j) of this AD.

(m) Terminating Action for AD 2011–09–04, Amendment 39–16666 (76 FR 28626, May 18, 2011)

Replacement of the CWB as required by paragraph (j) of this AD terminates the inspections required by AD 2011–09–04, Amendment 39–16666 (76 FR 28626, May 18, 2011), for that CWB.

(n) Alternative Methods of Compliance (AMOCs)

(1) The Manager, Atlanta ACO, FAA, has the authority to approve AMOCs for this AD, if requested using the procedures found in 14 CFR 39.19. In accordance with 14 CFR 39.19, send your request to your principal inspector or local Flight Standards District Office, as appropriate. If sending information directly to the manager of the ACO, send it to the attention of the person identified in paragraph (o) of this AD.

(2) Before using any approved AMOC, notify your appropriate principal inspector, or lacking a principal inspector, the manager of the local flight standards district office/ certificate holding district office.

(3) As of the effective date of this AD, an AMOC that provides an acceptable level of safety may be used for any repair required by this AD, if it is approved by a Delegated Engineering Representative (DER) for the Lockheed Martin Aeronautics Company who has been authorized by the Manager, Atlanta ACO, to make those findings. For a repair method to be approved, the repair approval must meet the certification basis of the airplane, and the approval must specifically refer to this AD.

(o) Related Information

For more information about this AD, contact Carl Gray, Aerospace Engineer, Airframe Branch, ACE–117A, Atlanta ACO, FAA, 1701 Columbia Avenue, College Park, GA 30337; phone: 404–474–5554; fax: 404–474–5605; email: *carl.w.gray@faa.gov.*

(p) Material Incorporated by Reference

(1) The Director of the Federal Register approved the incorporation by reference (IBR) of the service information listed in this paragraph under 5 U.S.C. 552(a) and 1 CFR part 51.

(2) You must use this service information as applicable to do the actions required by this AD, unless the AD specifies otherwise.

(i) Lockheed Martin Aeronautics Company Service Bulletin 382–57–90, dated November 5, 2010.

(ii) Lockheed Martin Aeronautics Company Service Bulletin 382–57–94, dated December 3, 2013.

(iii) Lockheed Martin Aeronautics Company Service Bulletin 382–57–96, dated December 16, 2013.

(3) For service information identified in this AD, contact Lockheed Martin Corporation/Lockheed Martin Aeronautics Company, Airworthiness Office, Dept. 6A0M, Zone 0252, Column P–58, 86 S. Cobb Drive, Marietta, GA 30063; telephone 770–494–5444; fax 770–494–5445; email *ams.portal@lmco.com*; Internet *http://www.lockheedmartin.com/ams/tools/TechPubs.html.*

(4) You may view this service information at FAA, Transport Airplane Directorate, 1601 Lind Avenue SW., Renton, WA. For information on the availability of this material at the FAA, call 425–227–1221.

(5) You may view this service information that is incorporated by reference at the National Archives and Records Administration (NARA). For information on the availability of this material at NARA, call 202–741–6030, or go to *http://www.archives.gov/federal-register/cfr/ibr-locations.html.*

Issued in Renton, Washington, on August 21, 2015.

Kevin Hull,

Acting Manager, Transport Airplane Directorate, Aircraft Certification Service.

[FR Doc. 2015–21465 Filed 9–1–15; 8:45 am]

BILLING CODE 4910–13–P

DEPARTMENT OF TRANSPORTATION

Federal Aviation Administration

14 CFR Part 39

[Docket No. FAA–2015–3656; Directorate Identifier 2015–CE–027–AD; Amendment 39–18259; AD 2015–18–01]

RIN 2120–AA64

Airworthiness Directives; Vulcanair S.p.A. Airplanes

AGENCY: Federal Aviation Administration (FAA), DOT.

ACTION: Final rule; request for comments.

SUMMARY: We are adopting a new airworthiness directive (AD) for Vulcanair S.p.A. Model P.68R airplanes. This AD results from mandatory continuing airworthiness information (MCAI) issued by the aviation authority of another country to identify and correct an unsafe condition on an aviation product. The MCAI describes the unsafe condition as a discrepancy in the climb performance reported in the airplane flight manual and in the actual performance of the airplane. We are issuing this AD to require actions to address the unsafe condition on these products.

DATES: This AD is effective September 22, 2015.

The Director of the Federal Register approved the incorporation by reference of certain publications listed in the AD as of September 22, 2015.

We must receive comments on this AD by October 19, 2015.

ADDRESSES: You may send comments by any of the following methods:

- Federal eRulemaking Portal: Go to *http://www.regulations.gov.* Follow the instructions for submitting comments.
- Fax: (202) 493–2251.
- Mail: U.S. Department of Transportation, Docket Operations, M–30, West Building Ground Floor, Room W12–140, 1200 New Jersey Avenue SE., Washington, DC 20590.
- Hand Delivery: U.S. Department of Transportation, Docket Operations, M–30, West Building Ground Floor, Room W12–140, 1200 New Jersey Avenue SE., Washington, DC 20590, between 9 a.m. and 5 p.m., Monday through Friday, except Federal holidays.

For service information identified in this AD, contact Vulcanair S.p.A., Via Giovanni Pascoli 80026 Casoria NA Italy; telephone: +39 081 5918111; fax: +39 081 5918172; Internet: *http://www.vulcanair.com/technical-support;* email: *continued.airworthiness@vulcanair.com.* You may view this referenced service information at the FAA, Small Airplane Directorate, 901 Locust, Kansas City, Missouri 64106. For information on the availability of this material at the FAA, call (816) 329–4148. It is also available on the Internet at *http://www.regulations.gov* by searching for Docket No. FAA–2015–3656.

Examining the AD Docket

You may examine the AD docket on the Internet at *http://www.regulations.gov* by searching for and locating Docket No. FAA–2015–3656; or in person at the Docket Management Facility between 9 a.m. and 5 p.m., Monday through Friday, except Federal holidays. The AD docket contains this AD, the regulatory evaluation, any comments received, and other information. The street address for

the Docket Office (telephone (800) 647–5527) is in the **ADDRESSES** section. Comments will be available in the AD docket shortly after receipt.

FOR FURTHER INFORMATION CONTACT: Mike Kiesov, Aerospace Engineer, FAA, Small Airplane Directorate, 901 Locust, Room 301, Kansas City, Missouri 64106; telephone: (816) 329–4144; fax: (816) 329–4090; email: *mike.kiesov@faa.gov.*

SUPPLEMENTARY INFORMATION:

Discussion

The European Aviation Safety Agency (EASA), which is the Technical Agent for the Member States of the European Community, has issued AD No.: 2015–0145, dated July 21, 2015 (referred to after this as ''the MCAI''), to correct an unsafe condition for the specified products. The MCAI states:

> During a recent flight test campaign to evaluate the performance and handling characteristics of a P.68R aeroplane in support of an STC application, differences were noticed between the climb performance reported in the applicable Aircraft Flight Manual (AFM) and the performance demonstrated during those tests.
>
> Prompted by these findings, further flight tests performed by Vulcanair confirmed that the All Engines Operative (AEO) rate of climb (ROC) performance, as published in the current revision of the applicable AFMs, is incorrect.
>
> This condition, if not corrected, could lead to over-estimation of AEO ROC, possibly resulting in impact with terrain or obstacle due to erroneous evaluation of aeroplane climb performance.
>
> To address this potential unsafe condition, Vulcanair S.p.A. revised the applicable AFMs, informing operators with Service Bulletin (SB) No. 244.

For the reason described above, this AD requires revising applicable AFM.

You may examine the MCAI on the Internet at *http://www.regulations.gov* by searching for and locating Docket No. FAA–2015–3656.

Relevant Service Information Under 1 CFR Part 51

Vulcanair S.p.A. has issued Vulcanair Aircraft P.68 Variants Mandatory Service Bulletin No. 244, dated April 24, 2015. The actions described in this service information are intended to correct the unsafe condition identified in the MCAI. The service information describes procedures for replacing the applicable airplane flight manual with its latest revision including the changes related to the airplane's rate of climb performance.

Pages 5–1 through 5–34, in Section 5, Revision 27, dated April 23, 2015, of the Vulcanair Aircraft P.68R POH/AFM, NOR10.707–30C, Revision 17, dated July 22, 2013 and pages 1 through 42, in Supplement F, in Section 8, Revision 27, dated April 23, 2015, of the Vulcanair Aircraft P.68R POH/AFM, NOR10.707–30C, Revision 17, dated July 22, 2013, detailing changes related to the airplane's rate of climb performance, are the applicable airplane flight manual latest revision replacement pages required by Vulcanair Aircraft P.68 Variants Mandatory Service Bulletin No. 244, dated April 24, 2015.

This service information is reasonably available because the interested parties have access to it through their normal course of business or by the means identified in the **ADDRESSES** section of this AD.

FAA's Determination and Requirements of the AD

This product has been approved by the aviation authority of another country, and is approved for operation in the United States. Pursuant to our bilateral agreement with this State of Design Authority, they have notified us of the unsafe condition described in the MCAI and service information referenced above. We are issuing this AD because we evaluated all information provided by the State of Design Authority and determined the unsafe condition exists and is likely to exist or develop on other products of the same type design.

FAA's Determination of the Effective Date

An unsafe condition exists that requires the immediate adoption of this AD. The FAA has found that the risk to the flying public justifies waiving notice and comment prior to adoption of this rule because differences have been found between the climb performance reported in the applicable aircraft flight manual (AFM) and the performance demonstrated during test flights. This condition, if not corrected, could result in over-estimation of the airplane's rate of climb, resulting in impact with obstructions or terrain. Therefore, we determined that notice and opportunity for public comment before issuing this AD are impracticable and that good cause exists for making this amendment effective in fewer than 30 days.

Comments Invited

This AD is a final rule that involves requirements affecting flight safety, and we did not precede it by notice and opportunity for public comment. We invite you to send any written relevant data, views, or arguments about this AD. Send your comments to an address listed under the **ADDRESSES** section. Include ''Docket No. FAA–2015–3656; Directorate Identifier 2015–CE–027–AD'' at the beginning of your comments. We specifically invite comments on the overall regulatory, economic, environmental, and energy aspects of this AD. We will consider all comments received by the closing date and may amend this AD because of those comments.

We will post all comments we receive, without change, to *http://www.regulations.gov,* including any personal information you provide. We will also post a report summarizing each substantive verbal contact we receive about this AD.

Costs of Compliance

We estimate that this AD will affect 1 product of U.S. registry. We also estimate that it would take about 1 work-hour per product to comply with the basic requirements of this AD. The average labor rate is $85 per work-hour.

Based on these figures, we estimate the cost of the AD on U.S. operators to be $85, or $85 per product.

Authority for This Rulemaking

Title 49 of the United States Code specifies the FAA's authority to issue rules on aviation safety. Subtitle I, section 106, describes the authority of the FAA Administrator. ''Subtitle VII: Aviation Programs,'' describes in more detail the scope of the Agency's authority.

We are issuing this rulemaking under the authority described in ''Subtitle VII, Part A, Subpart III, section 44701: General requirements.'' Under that section, Congress charges the FAA with promoting safe flight of civil aircraft in air commerce by prescribing regulations for practices, methods, and procedures the Administrator finds necessary for safety in air commerce. This regulation is within the scope of that authority because it addresses an unsafe condition that is likely to exist or develop on products identified in this rulemaking action.

Regulatory Findings

We determined that this AD will not have federalism implications under Executive Order 13132. This AD will not have a substantial direct effect on the States, on the relationship between the national government and the States, or on the distribution of power and responsibilities among the various levels of government.

For the reasons discussed above, I certify that this AD:

(1) Is not a ''significant regulatory action'' under Executive Order 12866,

(2) Is not a ''significant rule'' under the DOT Regulatory Policies and

Procedures (44 FR 11034, February 26, 1979),

(3) Will not affect intrastate aviation in Alaska, and

(4) Will not have a significant economic impact, positive or negative, on a substantial number of small entities under the criteria of the Regulatory Flexibility Act.

List of Subjects in 14 CFR Part 39

Air transportation, Aircraft, Aviation safety, Incorporation by reference, Safety.

Adoption of the Amendment

Accordingly, under the authority delegated to me by the Administrator, the FAA amends 14 CFR part 39 as follows:

PART 39—AIRWORTHINESS DIRECTIVES

■ 1. The authority citation for part 39 continues to read as follows:

Authority: 49 U.S.C. 106(g), 40113, 44701.

§ 39.13 [Amended]

■ 2. The FAA amends § 39.13 by adding the following new AD:

2015–18–01 Vulcanair S.p.A.: Amendment 39–18259; Docket No. FAA–2015–3656; Directorate Identifier 2015–CE–027–AD.

(a) Effective Date

This airworthiness directive (AD) becomes effective September 22, 2015.

(b) Affected ADs

None.

(c) Applicability

This AD applies to Vulcanair S.p.A. Models P.68R airplanes, serial numbers 458/R and subsequent, certificated in any category.

(d) Subject

Air Transport Association of America (ATA) Code 34: Navigation.

(e) Reason

This AD was prompted by mandatory continuing airworthiness information (MCAI) issued by the aviation authority of another country to identify and correct an unsafe condition on an aviation product. The MCAI describes the unsafe condition as a discrepancy in the climb performance reported in the airplane flight manual (AFM) and/or pilots operating handbook (POH) in the actual performance of the airplane. We are issuing this AD to correct the AFM by inserting the proper climb performance data into the manual, which if not corrected could result in over-estimation of the airplane's rate of climb, resulting in impact with obstructions or terrain.

(f) Actions and Compliance

Unless already done, within 30 days after the effective date of this AD, insert pages 5–1 through 5–34, into Section 5, Revision 27, dated April 23, 2015, of the Vulcanair Aircraft P.68R POH/AFM, NOR10.707–30C, Revision 17, dated July 22, 2013; and pages 1 through 42, into Supplement F, in Section 8, Revision 27; dated April 23, 2015, of the Vulcanair Aircraft P.68R POH/AFM, NOR10.707–30C, Revision 17, dated July 22, 2013, following the instructions in Vulcanair Aircraft P.68 Variants Mandatory Service Bulletin No. 244, dated April 24, 2015.

(g) Other FAA AD Provisions

The following provisions also apply to this AD:

(1) *Alternative Methods of Compliance (AMOCs):* The Manager, Standards Office, FAA, has the authority to approve AMOCs for this AD, if requested using the procedures found in 14 CFR 39.19. Send information to ATTN: Mike Kiesov, Aerospace Engineer, FAA, Small Airplane Directorate, 901 Locust, Room 301, Kansas City, Missouri 64106; telephone: (816) 329–4144; fax: (816) 329–4090; email: *mike.kiesov@faa.gov.* Before using any approved AMOC on any airplane to which the AMOC applies, notify your appropriate principal inspector (PI) in the FAA Flight Standards District Office (FSDO), or lacking a PI, your local FSDO.

(2) *Airworthy Product:* For any requirement in this AD to obtain corrective actions from a manufacturer or other source, use these actions if they are FAA-approved. Corrective actions are considered FAA-approved if they are approved by the State of Design Authority (or their delegated agent). You are required to assure the product is airworthy before it is returned to service.

(h) Related Information

Refer to MCAI European Aviation Safety Agency (EASA) AD No.: 2015–0145, dated July 21, 2015, for related information. You may examine the MCAI on the Internet at *http://www.regulations.gov* by searching for and locating Docket No. FAA–2015–3656.

(i) Material Incorporated by Reference

(1) The Director of the Federal Register approved the incorporation by reference (IBR) of the service information listed in this paragraph under 5 U.S.C. 552(a) and 1 CFR part 51.

(2) You must use this service information as applicable to do the actions required by this AD, unless the AD specifies otherwise.

(i) Vulcanair Aircraft P.68 Variants Mandatory Service Bulletin No. 244, dated April 24, 2015.

(ii) Pages 5–1 through 5–34, in Section 5, Revision 27, dated April 23, 2015, of the Vulcanair Aircraft P.68R POH/AFM, NOR10.707–30C, Revision 17, dated July 22, 2013.

(iii) Pages 1 through 42, in Supplement F, in Section 8, Revision 27; dated April 23, 2015; of the Vulcanair Aircraft P.68R POH/AFM, NOR10.707–30C, Revision 17, dated July 22, 2013.

(3) For Vulcanair service information identified in this AD, contact Vulcanair S.p.A., Via Giovanni Pascoli 80026 Casoria NA Italy; telephone: +39 081 5918111; fax: +39 081 5918172; Internet: *http://www.vulcanair.com/technical-support;* email: *continued.airworthiness@vulcanair.com.*

(4) You may view this service information at the FAA, Small Airplane Directorate, 901 Locust, Kansas City, Missouri 64106. For information on the availability of this material at the FAA, call (816) 329–4148. It is also available on the Internet at *http://www.regulations.gov* by searching for locating Docket No. FAA–2015–3656.

(5) You may view this service information that is incorporated by reference at the National Archives and Records Administration (NARA). For information on the availability of this material at NARA, call 202–741–6030, or go to: *http://www.archives.gov/federal-register/cfr/ibr-locations.htm*l.

Issued in Kansas City, Missouri on August 21, 2015.

Earl Lawrence,

Manager, Small Airplane Directorate, Aircraft Certification Service.

[FR Doc. 2015–21444 Filed 9–1–15; 8:45 am]

BILLING CODE 4910–13–P

DEPARTMENT OF TRANSPORTATION

Federal Aviation Administration

14 CFR Part 39

[Docket No. FAA–2014–0523; Directorate Identifier 2014–NM–050–AD; Amendment 39–18246; AD 2015–17–13]

RIN 2120–AA64

Airworthiness Directives; The Boeing Company Airplanes

AGENCY: Federal Aviation Administration (FAA), DOT.

ACTION: Final rule.

SUMMARY: We are adopting a new airworthiness directive (AD) for certain The Boeing Company Model 777–200 and –300 series airplanes equipped with Pratt and Whitney engines. This AD was prompted by reports of blocked drain lines at the engine forward strut that caused flammable fluid to accumulate in a flammable leakage zone. This AD requires repetitive functional checks for blockage of the forward strut drain line and doing corrective actions if necessary, and a one-time cleaning of certain forward strut drain lines. This AD also provides an optional replacement of the drain lines and installation of insulation blankets, and a revision of the maintenance or inspection program, as applicable, to incorporate a certain airworthiness limitation, which would terminate the repetitive checks of the forward strut drain line. We are issuing this AD to detect and correct blockage of forward strut drain lines, which could cause flammable fluids to collect in the

forward strut area and potentially cause an uncontrolled fire or cause failure of engine attachment structure and consequent airplane loss.

DATES: This AD is effective October 7, 2015.

The Director of the Federal Register approved the incorporation by reference of a certain publication listed in this AD as of October 7, 2015.

ADDRESSES: For service information identified in this AD, contact Boeing Commercial Airplanes, Attention: Data & Services Management, P.O. Box 3707, MC 2H–65, Seattle, WA 98124–2207; telephone 206–544–5000, extension 1; fax 206–766–5680; Internet *https://www.myboeingfleet.com.* You may view this referenced service information at the FAA, Transport Airplane Directorate, 1601 Lind Avenue SW., Renton, WA. For information on the availability of this material at the FAA, call 425–227–1221. It is also available on the Internet at *http://www.regulations.gov* by searching for and locating Docket No. FAA–2014–0523.

Examining the AD Docket

You may examine the AD docket on the Internet at *http://www.regulations.gov* by searching for and locating Docket No. FAA–2014–0523; or in person at the Docket Management Facility between 9 a.m. and 5 p.m., Monday through Friday, except Federal holidays. The AD docket contains this AD, the regulatory evaluation, any comments received, and other information. The address for the Docket Office (phone: 800–647–5527) is Docket Management Facility, U.S. Department of Transportation, Docket Operations, M–30, West Building Ground Floor, Room W12–140, 1200 New Jersey Avenue SE., Washington, DC 20590.

FOR FURTHER INFORMATION CONTACT: Kevin Nguyen, Aerospace Engineer, Propulsion Branch, ANM–140S, FAA, Seattle Aircraft Certification Office, 1601 Lind Avenue SW., Renton, WA 98057–3356; phone: 425–917–6501; fax: 425–917–6590; email: *kevin.nguyen@faa.gov.*

SUPPLEMENTARY INFORMATION:

Discussion

We issued a notice of proposed rulemaking (NPRM) to amend 14 CFR part 39 by adding an AD that would apply to certain The Boeing Company Model 777–200 and –300 series airplanes equipped with Pratt and Whitney engines. The NPRM published in the **Federal Register** on August 7, 2014 (79 FR 46201). The NPRM was prompted by reports of blocked drain lines at the engine forward strut that caused flammable fluid to accumulate in a flammable leakage zone. The NPRM proposed to require repetitive functional checks for blockage of the forward strut drain line and doing corrective actions (including cleaning or replacing any blocked drain lines) if necessary, and a one-time cleaning of certain forward strut drain lines. We are issuing this AD to detect and correct blockage of forward strut drain lines, which could cause flammable fluids to collect in the forward strut area and potentially cause an uncontrolled fire or cause failure of engine attachment structure and consequent airplane loss.

This AD requires revisions to certain operator maintenance documents to include new actions (*e.g.,* inspections). Compliance with these actions is required by 14 CFR 91.403(c). For airplanes that have been previously modified, altered, or repaired in the areas addressed by this AD, the operator may not be able to accomplish the actions described in the revisions. In this situation, to comply with 14 CFR 91.403(c), the operator must request approval for an alternative method of compliance according to paragraph (l) of this AD. The request should include a description of changes to the required inspections that will ensure the continued operational safety of the airplane.

Related Rulemaking

On September 23, 2014, we issued AD 2014–20–10, Amendment 39–17983 (79 FR 60331, October 7, 2014), for certain The Boeing Company Model 777–200 and –300 series airplanes. AD 2014–20–10 superseded AD 2013–11–14, Amendment 39–17474 (78 FR 35749, June 14, 2013). AD 2014–20–10 currently requires repetitive general visual inspections of the strut forward dry bay for the presence of hydraulic fluid, and related investigative and corrective actions (including checking drain lines for blockage due to hydraulic fluid coking; cleaning or replacing drain lines to allow drainage) if necessary; and adds airplanes to the applicability. AD 2014–20–10 was prompted by reports of hydraulic fluid contamination (including contamination caused by hydraulic fluid in its liquid, vapor, and/or solid (coked) form) found in the strut forward dry bay. The actions required by 2014–20–10 are intended to detect and correct hydraulic fluid contamination of the strut forward dry bay, which could result in hydrogen embrittlement of the titanium forward engine mount bulkhead fittings, and consequent inability of the fittings to carry engine loads and resulting in engine separation. Hydrogen embrittlement also could cause a through-crack formation across the fittings through which an engine fire could breach into the strut, resulting in an uncontained strut fire.

On December 22, 2014, we issued AD 2015–01–01, Amendment 39–18062 (80 FR 3158, January 22, 2015) for certain The Boeing Company Model 777–200 and –300 series airplanes. AD 2015–01–01 superseded AD 2011–09–11, Amendment 39–16673 (76 FR 24354, May 2, 2011). AD 2015–01–01 currently requires repetitive inspections for hydraulic fluid contamination of the interior of the strut disconnect assembly; repetitive inspections for discrepancies of the interior of the strut disconnect assembly, if necessary; repetitive inspections of the exterior of the strut disconnect assembly for cracks, if necessary; and corrective action if necessary. AD 2015–01–01 also provides an optional terminating action for the inspections and adds, for certain airplanes, an inspection of the side and top cover plates to determine if all cover plate attach fasteners have been installed, installing any missing fasteners including doing an inspection for damage, and repair if necessary.

AD 2015–01–01, Amendment 39–18062 (80 FR 3158, January 22, 2015) was prompted by reports of side and top cover plates installed with missing fastener bolts, which could result in an unsealed opening on the system disconnect assembly. The actions required by AD 2015–01–01 are intended to detect and correct hydraulic fluid contamination, which could cause cracking of titanium parts in the system disconnect assembly. The actions of 2015–01–01 are also intended to detect and correct missing fasteners, which could result in unsealed openings on the system disconnect assembly. Both unsafe conditions can compromise the engine firewall and result in fire hazards for both the engine compartment and the strut.

Comments

We gave the public the opportunity to participate in developing this AD. The following presents the comments received on the NPRM (79 FR 46201, August 7, 2014) and the FAA's response to each comment.

Request To Add Service Information as Optional Terminating Action

Boeing and Japan Airlines (JAL) requested that we add Boeing Special Attention Service Bulletin 777–71–0055, dated June 12, 2014, as a terminating action to the NPRM (79 FR

46201, August 7, 2014). Boeing specifically requested that this service information be added in the Supplementary Information—Interim Action section and as a second paragraph to paragraph (i) of the NPRM. Boeing requested that paragraph (i) of the NPRM state that accomplishment of Boeing Special Attention Service Bulletin 777–71–0055, dated June 12, 2014, terminates the requirements of Boeing Special Attention Service Bulletin 777–54–0027, Revision 1, dated September 12, 2013, and is an alternative means of compliance with this AD.

We agree. Boeing Special Attention Service Bulletin 777–71–0055, dated June 12, 2014, which has since been revised as Revision 1, dated April 15, 2015, describes procedures that address the identified unsafe condition. These procedures include removing the forward strut drain lines; cleaning the left systems disconnect, strut forward lower spar, and forward fireseal pan drain lines; installing new forward strut drain lines and insulation blankets; and doing a functional leak check of the forward strut drain lines, and repair if any leaking is found.

We have added new paragraph (i) to this AD to provide optional terminating action and redesignated subsequent paragraphs accordingly. Paragraph (i) of this AD states that accomplishment of Boeing Special Attention Service Bulletin 777–71–0055, Revision 1, dated April 15, 2015, along with a revision of the maintenance or inspection program, as applicable, to incorporate a certain airworthiness limitation, terminates the requirements of paragraph (g)(1) of this AD at the modified area only.

We have also added new paragraph (j) of this AD to specify that no alternative actions or intervals may be used after incorporating the airworthiness limitation unless the actions or intervals are approved as an alternative method of compliance (AMOC) in accordance with the procedures specified in paragraph (l) of this AD. We redesignated subsequent paragraphs accordingly.

We have also added new paragraph (k) to this AD to give credit for actions required by paragraph (i) of this AD, if those actions were performed before the effective date of this AD using Boeing Special Attention Service Bulletin 777–71–0055, dated June 12, 2014. We redesignated subsequent paragraphs accordingly.

In addition, we updated the ''Interim Action'' paragraph in the **SUPPLEMENTARY INFORMATION** section of the preamble of this final rule accordingly.

Request To Remove Requirement To Clean Forward Strut Drain Line

All Nippon Airways (ANA) requested that we revise the NPRM (79 FR 46201, August 7, 2014) to remove the phrase ''clean the forward strut drain line'' from paragraph (g)(1) of the NPRM. ANA stated that cleaning the forward strut drain line is not required if part 1, condition 1, in paragraph 3.B ''Work Instructions,'' of Boeing Special Attention Service Bulletin 777–54–0027, Revision 1, dated September 12, 2013, is met.

We agree because condition 1 is met when 354 or more ounces of water are collected within 2 minutes after the start of pouring water for the functional check of the forward strut drain line. Cleaning the blocked drain line is part of the corrective actions in condition 2 as specified in Boeing Special Attention Service Bulletin 777–54–0027, Revision 1, dated September 12, 2013. This change does not compromise safety or the intent of the AD, therefore, we have removed the phrase ''clean the forward strut drain line,'' from paragraph (g)(1) of this final rule.

Request To Allow Alternate Tee Fitting Part Numbers

ANA requested the NPRM (79 FR 46201, August 7, 2014) include three part numbers of the tee fitting. ANA indicated that paragraph 2.C., of Boeing Special Attention Service Bulletin 777–54–0027, Revision 1, dated September 12, 2013, states BACT16BR120612J tee fitting is required if replacement is necessary. ANA stated tee fittings having part numbers BACT16BR120612J, BACT16BR120612JN, and AS4139J120612 may be used according to a Boeing product standard parts list.

We agree because the tee fitting part number BACT16BR120612J listed in Boeing Special Attention Service Bulletin 777–54–0027, Revision 1, dated September 12, 2013, is obsolete. We have added text to paragraph (g)(1) of this AD to allow alternate tee fitting part numbers BACT16BR120612JN and AS4139J120612, as long as the installation of the forward strut drain lines is accomplished in accordance with the Accomplishment Instructions of Boeing Special Attention Service Bulletin 777–54–0027, Revision 1, dated September 12, 2013.

Conclusion

We reviewed the relevant data, considered the comments received, and determined that air safety and the public interest require adopting this AD with the changes described previously and minor editorial changes. We have determined that these minor changes:

- Are consistent with the intent that was proposed in the NPRM (79 FR 46201, August 7, 2014) for correcting the unsafe condition; and
- Do not add any additional burden upon the public than was already proposed in the NPRM (79 FR 46201, August 7, 2014).

We also determined that these changes will not increase the economic burden on any operator or increase the scope of this AD.

Interim Action

We consider this AD interim action. The manufacturer has issued Boeing Special Attention Service Bulletin 777–71–0055, Revision 1, dated April 15, 2015, which describes a modification that addresses the unsafe condition identified in this AD. This service information is an optional action in this AD. If final action is later identified, we might consider further rulemaking.

Related Service Information Under 1 CFR Part 51

We reviewed the following Boeing service information.

- Boeing Special Attention Service Bulletin 777–54–0027, Revision 1, dated September 12, 2013. The service information describes procedures for doing a functional check for blockage of the forward strut drain lines and corrective actions.
- Boeing Special Attention Service Bulletin 777–71–0055, Revision 1, dated April 15, 2015. This service information describes procedures for replacing the forward strut drain lines and adding insulation blankets.
- Airworthiness Limitation 54–AWL–01, ''Forward Strut Drain Line,'' Section D.4, Pratt and Whitney Forward Strut Drain Line, of the Boeing 777 Maintenance Planning Data (MPD) Document Section 9, Airworthiness Limitations (AWLs) and Certification Maintenance Requirements (CMRs), D622W001–9, Revision October 2014. This service information describes an airworthiness limitation task for the functional check of the forward strut drain line.

This service information is reasonably available because the interested parties have access to it through their normal course of business or by the means identified in the **ADDRESSES** section of this AD.

Costs of Compliance

We estimate that this AD affects 54 airplanes of U.S. registry.

We estimate the following costs to comply with this AD:

ESTIMATED COSTS: REQUIRED ACTIONS

Action	Labor cost	Parts cost	Cost per product	Cost on U.S. operators
Repetitive functional checks of 2 struts per inspection cycle.	9 work-hours × $85 per hour = $765 per inspection cycle.	$0	$765 per inspection cycle	$41,310 per inspection cycle.
One-time cleaning	13 work-hours × $85 per hour = $1,105.	0	1,105	59,670.

We estimate the following costs to do any necessary repairs or replacements that would be required based on the results of the inspection. We have no way of determining the number of aircraft that might need these replacements:

ON-CONDITION COSTS

Action	Labor cost	Parts cost	Cost per product
Repair drain tube assemblies in up to 2 struts	Up to 5 work-hours × $85 per hour = $425	$0	Up to $425.
Replace drain tube assemblies in up to 2 struts ..	Up to 5 work-hours × $85 per hour = $425	Up to $4,484	Up to $4,909.

According to the manufacturer, some of the costs of this AD may be covered under warranty, thereby reducing the cost impact on affected individuals. We do not control warranty coverage for affected individuals. As a result, we have included all costs in our cost estimate.

ESTIMATED COSTS: OPTIONAL ACTIONS

Action	Labor Cost	Parts Cost	Cost per product
Removal of drain tube assemblies	1 work-hour × $85 per hour = $85	$0	$85
Cleaning of drain lines	6 work-hours × $85 per hour = $510	$0	$510
Installation of new drain lines and insulation blankets	2 work-hours × $85 per hour = $170	$17,250	$17,420
Leak check of drain lines	1 work-hour × $85 per hour = $85	$0	$85
Revision of maintenance or inspection program	1 work-hour × $85 per hour = $85	$0	$85

Authority for This Rulemaking

Title 49 of the United States Code specifies the FAA's authority to issue rules on aviation safety. Subtitle I, section 106, describes the authority of the FAA Administrator. Subtitle VII: Aviation Programs, describes in more detail the scope of the Agency's authority.

We are issuing this rulemaking under the authority described in Subtitle VII, Part A, Subpart III, Section 44701: ''General requirements.'' Under that section, Congress charges the FAA with promoting safe flight of civil aircraft in air commerce by prescribing regulations for practices, methods, and procedures the Administrator finds necessary for safety in air commerce. This regulation is within the scope of that authority because it addresses an unsafe condition that is likely to exist or develop on products identified in this rulemaking action.

Regulatory Findings

This AD will not have federalism implications under Executive Order 13132. This AD will not have a substantial direct effect on the States, on the relationship between the national government and the States, or on the distribution of power and responsibilities among the various levels of government.

For the reasons discussed above, I certify that this AD:

(1) Is not a ''significant regulatory action'' under Executive Order 12866,

(2) Is not a ''significant rule'' under DOT Regulatory Policies and Procedures (44 FR 11034, February 26, 1979),

(3) Will not affect intrastate aviation in Alaska, and

(4) Will not have a significant economic impact, positive or negative, on a substantial number of small entities under the criteria of the Regulatory Flexibility Act.

List of Subjects in 14 CFR Part 39

Air transportation, Aircraft, Aviation safety, Incorporation by reference, Safety.

Adoption of the Amendment

Accordingly, under the authority delegated to me by the Administrator, the FAA amends 14 CFR part 39 as follows:

PART 39—AIRWORTHINESS DIRECTIVES

■ 1. The authority citation for part 39 continues to read as follows:

Authority: 49 U.S.C. 106(g), 40113, 44701.

§ 39.13 [Amended]

■ 2. The FAA amends § 39.13 by adding the following new airworthiness directive (AD):

2015–17–13 The Boeing Company: Amendment 39–18246 ; Docket No. FAA–2014–0523; Directorate Identifier 2014–NM–050–AD.

(a) Effective Date

This AD is effective October 7, 2015.

(b) Affected ADs

None.

(c) Applicability

This AD applies to The Boeing Company Model 777–200 and -300 series airplanes, certificated in any category, equipped with Pratt & Whitney engines, as identified in Boeing Special Attention Service Bulletin 777–54–0027, Revision 1, dated September 12, 2013.

(d) Subject

Air Transport Association (ATA) of America Code 54, Nacelles/pylons.

(e) Unsafe Condition

This AD was prompted by reports of blocked drain lines at the engine forward strut that caused flammable fluid to accumulate in a flammable leakage zone. We are proposing this AD to detect and correct blockage of forward strut drain lines, which could cause flammable fluids to collect in the forward strut area and potentially cause an uncontrolled fire or cause failure of engine attachment structure and consequent airplane loss.

(f) Compliance

Comply with this AD within the compliance times specified, unless already done.

(g) Functional Check, Cleaning, and Corrective Actions

At the applicable times specified in paragraph 1.E., ''Compliance,'' of Boeing Special Attention Service Bulletin 777–54–0027, Revision 1, dated September 12, 2013, except as provided by paragraph (h) of this AD, do the actions specified in paragraphs (g)(1) and (g)(2) of this AD, in accordance with the Accomplishment Instructions of Boeing Special Attention Service Bulletin 777–54–0027, Revision 1, dated September 12, 2013. Repeat the functional check required by paragraph (g)(1) of this AD, thereafter at the applicable times specified in paragraph 1.E., ''Compliance,'' of Boeing Special Attention Service Bulletin 777–54–0027, Revision 1, dated September 12, 2013, until the terminating action specified in paragraph (i) of this AD is done.

(1) Do a functional check for blockage of the forward strut drain line of the left and right strut and do all applicable corrective actions (including cleaning or replacing blocked drain tubes, repairing fluid leaks, and cleaning the inlet drain screen on the right system disconnect assembly inlet). Do all applicable corrective actions before further flight. Alternate tee fitting part numbers BACT16BR120612JN and AS4139J120612 may be used during the replacement of the forward strut drain lines, provided the installation is performed in accordance with the Accomplishment Instructions of Boeing Special Attention Service Bulletin 777–54–0027, Revision 1, dated September 12, 2013.

(2) Do a one-time cleaning of the smaller forward strut drain lines connected to the left systems disconnect, the strut forward lower spar, and the forward fire seal pan inlets.

(h) Exception to the Service Information Specifications

Where Boeing Special Attention Service Bulletin 777–54–0027, Revision 1, dated September 12, 2013, refers to a compliance time ''after the Revision 1 date of this Service Bulletin,'' this AD requires compliance within the specified compliance time after the effective date of this AD.

(i) Optional Terminating Action

Accomplishment of the actions specified in paragraphs (i)(1) through (i)(4) of this AD, for both the left and right struts, in accordance with the Accomplishment Instructions of Boeing Special Attention Service Bulletin 777–71–0055, Revision 1, dated April 15, 2015, and accomplishment of the revision specified in paragraph (i)(5) of this AD, terminates the repetitive functional checks required by paragraph (g)(1) of this AD at the modified area only.

(1) Disconnect and remove the forward strut drain lines.

(2) Clean the left systems disconnect, the strut forward lower spar, and the forward fireseal pan drain lines.

(3) Install new forward strut drain lines and insulation blankets.

(4) Do a leak check of the forward strut drain lines, for any leak, and repair if any leaking is found.

(5) Revise the maintenance or inspection program, as applicable, to incorporate Airworthiness Limitation 54–AWL–01, ''Forward Strut Drain Line'', Section D.4, Pratt and Whitney Forward Strut Drain Line, of the Boeing 777 Maintenance Planning Data (MPD) Document Section 9, Airworthiness Limitations (AWLs) and Certification Maintenance Requirements (CMRs), D622W001–9, Revision October 2014. The initial compliance time for Airworthiness Limitation 54–AWL–01 is within 2,000 flight cycles or 1,500 days, whichever occurs first, after doing the actions specified in paragraphs (i)(1) through (i)(4) of this AD.

(j) No Alternative Actions or Intervals

After accomplishing the revision required by paragraph (i)(5) of this AD, no alternative actions (*e.g.,* inspections) or intervals may be used unless the actions or intervals are approved as an alternative method of compliance (AMOC) in accordance with the procedures specified in paragraph (l) of this AD.

(k) Credit for Previous Actions

This paragraph provides credit for actions required by paragraph (i) of this AD, if those actions were performed before the effective date of this AD using Boeing Special Attention Service Bulletin 777–71–0055, dated June 12, 2014, which is not incorporated by reference in this AD.

(l) Alternative Methods of Compliance (AMOCs)

(1) The Manager, Seattle Aircraft Certification Office (ACO), FAA, has the authority to approve AMOCs for this AD, if requested using the procedures found in 14 CFR 39.19. In accordance with 14 CFR 39.19, send your request to your principal inspector or local Flight Standards District Office, as appropriate. If sending information directly to the manager of the ACO, send it to the attention of the person identified in paragraph (m)(1) of this AD. Information may be emailed to: *9-ANM-Seattle-ACO-AMOC-Requests@faa.gov.*

(2) Before using any approved AMOC, notify your appropriate principal inspector, or lacking a principal inspector, the manager of the local flight standards district office/certificate holding district office.

(3) An AMOC that provides an acceptable level of safety may be used for any repair required by this AD if it is approved by the Boeing Commercial Airplanes Organization Designation Authorization (ODA) that has been authorized by the Manager, Seattle ACO, to make those findings. For a repair method to be approved, the repair must meet the certification basis of the airplane, and the approval must specifically refer to this AD.

(m) Related Information

(1) For more information about this AD, contact Kevin Nguyen, Aerospace Engineer, Propulsion Branch, ANM–140S, FAA, Seattle Aircraft Certification Office, 1601 Lind Avenue SW., Renton, WA 98057–3356; phone: 425–917–6501; fax: 425–917–6590; email: *kevin.nguyen@faa.gov.*

(2) Service information identified in this AD that is not incorporated by reference is available at the addresses specified in paragraphs (n)(3) and (n)(4) of this AD.

(n) Material Incorporated by Reference

(1) The Director of the Federal Register approved the incorporation by reference (IBR) of the service information listed in this paragraph under 5 U.S.C. 552(a) and 1 CFR part 51.

(2) You must use this service information as applicable to do the

actions required by this AD, unless the AD specifies otherwise.

(i) Boeing Special Attention Service Bulletin 777–54–0027, Revision 1, dated September 12, 2013.

(ii) Boeing Special Attention Service Bulletin 777–71–0055, Revision 1, dated April 15, 2015.

(iii) Airworthiness Limitation 54–AWL–01, ''Forward Strut Drain Line'', Section D.4, Pratt and Whitney Forward Strut Drain Line, of the Boeing 777 Maintenance Planning Data (MPD) Document Section 9, Airworthiness Limitations (AWLs) and Certification Maintenance Requirements (CMRs), D622W001–9, Revision October 2014.

(3) For service information identified in this AD, contact Boeing Commercial Airplanes, Attention: Data & Services Management, P. O. Box 3707, MC 2H–65, Seattle, WA 98124–2207; telephone 206–544–5000, extension 1; fax 206–766–5680; Internet *https://www.myboeingfleet.com.*

(4) You may view this service information at FAA, Transport Airplane Directorate, 1601 Lind Avenue SW., Renton, WA. For information on the availability of this material at the FAA, call 425–227–1221.

(5) You may view this service information that is incorporated by reference at the National Archives and Records Administration (NARA). For information on the availability of this material at NARA, call 202–741–6030, or go to: *http://www.archives.gov/federal-register/cfr/ibr-locations.html.*

Issued in Renton, Washington, on August 14, 2015.

Michael Kaszycki,

Acting Manager, Transport Airplane Directorate, Aircraft Certification Service.

[FR Doc. 2015–20696 Filed 9–1–15; 8:45 am]

BILLING CODE 4910–13–P

DEPARTMENT OF TRANSPORTATION

Federal Aviation Administration

14 CFR Part 39

[Docket No. FAA–2014–0586; Directorate Identifier 2013–NM–255–AD; Amendment 39–18256; AD 2015–17–23]

RIN 2120–AA64

Airworthiness Directives; Empresa Brasileira de Aeronautica S.A. (Embraer) Airplanes

AGENCY: Federal Aviation Administration (FAA), Department of Transportation (DOT).

ACTION: Final rule.

SUMMARY: We are adopting a new airworthiness directive (AD) for all Empresa Brasileira de Aeronautica S.A. (Embraer) Model EMB–135BJ airplanes. This AD was prompted by a determination that more restrictive fuel limitations are needed. This AD requires revising the maintenance or inspection program to incorporate new compliance times and fuel limitations. We are issuing this AD to detect and correct fatigue cracking of various structural elements and prevent ignition sources in the fuel system.

DATES: This AD becomes effective October 7, 2015.

The Director of the Federal Register approved the incorporation by reference of certain publications listed in this AD as of October 7, 2015.

ADDRESSES: You may examine the AD docket on the Internet at *http://www.regulations.gov/#!docketDetail;D=FAA-2014-0586* or in person at the Docket Management Facility, U.S. Department of Transportation, Docket Operations, M–30, West Building Ground Floor, Room W12–140, 1200 New Jersey Avenue SE., Washington, DC.

For service information identified in this AD, contact Empresa Brasileira de Aeronautica S.A. (Embraer), Technical Publications Section (PC 060), Av. Brigadeiro Faria Lima, 2170—Putim—12227–901 São Jose dos Campos—SP—Brasil; telephone +55 12 3927–5852 or +55 12 3309–0732; fax +55 12 3927–7546; email *distrib@embraer.com.br;* Internet *http://www.flyembraer.com.* You may view this referenced service information at the FAA, Transport Airplane Directorate, 1601 Lind Avenue SW., Renton, WA. For information on the availability of this material at the FAA, call 425–227–1221. It is also available on the Internet at *http://www.regulations.gov* by searching for and locating Docket No. FAA–2014–0586.

FOR FURTHER INFORMATION CONTACT: Todd Thompson, Aerospace Engineer, International Branch, ANM–116, Transport Airplane Directorate, FAA, 1601 Lind Avenue SW., Renton, WA 98057–3356; telephone 425–227–1175; fax 425–227–1149.

SUPPLEMENTARY INFORMATION:

Discussion

We issued a notice of proposed rulemaking (NPRM) to amend 14 CFR part 39 by adding an AD that would apply to all Empresa Brasileira de Aeronautica S.A. (Embraer) Model EMB–135BJ airplanes. The NPRM published in the **Federal Register** on August 26, 2014 (79 FR 50857). The NPRM was prompted by a determination that more restrictive fuel limitations are needed. The NPRM proposed to require revising the maintenance or inspection program to incorporate new compliance times and fuel limitations. We are issuing this AD to detect and correct fatigue cracking of various structural elements and prevent ignition sources in the fuel system.

The Agência Nacional De Aviação Civil (ANAC), which is the aviation authority for Brazil, has issued Brazilian Airworthiness Directive 2013–12–02, effective December 27, 2013 (referred to after this as the Mandatory Continuing Airworthiness Information, or ''the MCAI''), to correct an unsafe condition for all Empresa Brasileira de Aeronautica S.A. (Embraer) Model EMB–135BJ airplanes. The MCAI states:

> This [Brazilian] AD was prompted by a new revision to the Airworthiness Limitations Requirements of the Maintenance Planning Guide (MPG–1483). We are issuing this [Brazilian] AD to allow timely detection and correction of fatigue cracking of various structural elements, and to allow the necessary preclusion of ignition sources in the fuel system.

Required actions include revising the maintenance or inspection program, as applicable, to incorporate new compliance times and fuel limitations. You may examine the MCAI in the AD docket on the internet at *http://www.regulations.gov/#!docketDetail;D=FAA-2014-0586.*

Comments

We gave the public the opportunity to participate in developing this AD. We received no comments on the NPRM (79 FR 50857, August 26, 2014) or on the determination of the cost to the public.

Conclusion

We reviewed the relevant data and determined that air safety and the public interest require adopting this AD as proposed except for minor editorial changes. We have determined that these minor changes:

- Are consistent with the intent that was proposed in the NPRM (79 FR 50857, dated August 16, 2014) for correcting the unsafe condition; and
- Do not add any additional burden upon the public than was already proposed in the NPRM (79 FR 50857, dated August 16, 2014).

Related Service Information Under 1 CFR Part 51

Embraer has issued the following service information.

- Temporary Revision (TR) 8–1, dated October 26, 2012, to the Embraer Legacy BJ Maintenance Planning Guide (MPG), MPG–1483.

• TR 8–2, dated December 5, 2012, to the Embraer Legacy BJ MPG, MPG–1483.

• TR 8–3, dated April 8, 2013, to the Embraer Legacy BJ MPG, MPG–1483.

The service information describes revisions to the maintenance or inspection program to incorporate new compliance times and fuel limitations. This service information is reasonably available because the interested parties have access to it through their normal course of business or by the means identified in the **ADDRESSES** section of this AD.

Costs of Compliance

We estimate that this AD affects 53 airplanes of U.S. registry.

We also estimate that it would take about 1 work-hour per product to comply with the basic requirements of this AD. The average labor rate is $85 per work-hour. Based on these figures, we estimate the cost of this AD on U.S. operators to be $4,505, or $85 per product.

Authority for This Rulemaking

Title 49 of the United States Code specifies the FAA's authority to issue rules on aviation safety. Subtitle I, section 106, describes the authority of the FAA Administrator. ''Subtitle VII: Aviation Programs,'' describes in more detail the scope of the Agency's authority.

We are issuing this rulemaking under the authority described in ''Subtitle VII, Part A, Subpart III, Section 44701: General requirements.'' Under that section, Congress charges the FAA with promoting safe flight of civil aircraft in air commerce by prescribing regulations for practices, methods, and procedures the Administrator finds necessary for safety in air commerce. This regulation is within the scope of that authority because it addresses an unsafe condition that is likely to exist or develop on products identified in this rulemaking action.

Regulatory Findings

We determined that this AD will not have federalism implications under Executive Order 13132. This AD will not have a substantial direct effect on the States, on the relationship between the national government and the States, or on the distribution of power and responsibilities among the various levels of government.

For the reasons discussed above, I certify that this AD:

1. Is not a ''significant regulatory action'' under Executive Order 12866;

2. Is not a ''significant rule'' under the DOT Regulatory Policies and Procedures (44 FR 11034, February 26, 1979);

3. Will not affect intrastate aviation in Alaska; and

4. Will not have a significant economic impact, positive or negative, on a substantial number of small entities under the criteria of the Regulatory Flexibility Act.

Examining the AD Docket

You may examine the AD docket on the Internet at *http://www.regulations.gov/#!docketDetail;D=FAA-2014-0586;* or in person at the Docket Management Facility between 9 a.m. and 5 p.m., Monday through Friday, except Federal holidays. The AD docket contains this AD, the regulatory evaluation, any comments received, and other information. The street address for the Docket Operations office (telephone 800–647–5527) is in the **ADDRESSES** section.

List of Subjects in 14 CFR Part 39

Air transportation, Aircraft, Aviation safety, Incorporation by reference, Safety.

Adoption of the Amendment

Accordingly, under the authority delegated to me by the Administrator, the FAA amends 14 CFR part 39 as follows:

PART 39—AIRWORTHINESS DIRECTIVES

■ 1. The authority citation for part 39 continues to read as follows:

Authority: 49 U.S.C. 106(g), 40113, 44701.

§ 39.13 [Amended]

■ 2. The FAA amends § 39.13 by adding the following new AD:

2015–17–23 Empresa Brasileira de Aeronautica S.A. (Embraer): Amendment 39–18256. Docket No. FAA–2014–0586; Directorate Identifier 2013–NM–255–AD.

(a) Effective Date

This AD becomes effective October 7, 2015.

(b) Affected ADs

None.

(c) Applicability

This AD applies to all Empresa Brasileira de Aeronautica S.A. (Embraer) Model EMB–135BJ airplanes, certificated in any category.

(d) Subject

Air Transport Association (ATA) of America Code 28, Fuel; 53, Fuselage; 54, Nacelles/Pylon.

(e) Reason

This AD was prompted by a determination that more restrictive fuel limitations are needed. We are issuing this AD to detect and correct fatigue cracking of various structural elements and prevent ignition sources in the fuel system.

(f) Compliance

Comply with this AD within the compliance times specified, unless already done.

(g) Maintenance or Inspection Program Revision

Within 60 days after the effective date of this AD, do the actions specified in paragraphs (g)(1), (g)(2), and (g)(3) of this AD.

(1) Revise the maintenance or inspection program, as applicable, by incorporating the Critical Design Configuration Control Limitations (CDCCLs) specified in Embraer Temporary Revision (TR) 8–1, dated October 26, 2012, to the Embraer Legacy BJ Maintenance Planning Document (MPG), MPG–1483, into Appendix 2, ''Airworthiness Limitations Requirements,'' of the Embraer Legacy BJ MPG, MPG–1483.

(2) Revise the maintenance or inspection program, as applicable, by incorporating the tasks and compliance times specified in Embraer TR 8–3, dated April 8, 2013, of Embraer Legacy BJ MPG, MPG–1483; and Embraer TR 8–2, dated December 5, 2012, to the Embraer Legacy BJ MPG, MPG–1483; into Appendix 2, ''Airworthiness Limitations Requirements,'' of the Embraer Legacy BJ MPG, MPG–1483. The initial compliance times for the tasks start at the applicable time specified in Embraer TR 8–2, dated December 5, 2012, and TR 8–3, dated April 8, 2013; or within 500 flight cycles after the effective date of this AD, whichever occurs later. Where Embraer TR 8–2, dated December 5, 2012, specifies a compliance time in ''flight cycles'' for the pre-mod service bulletin, those compliance times are total flight cycles.

(3) Revise the maintenance or inspection program, as applicable, by incorporating the new fuel system limitations specified in Embraer TR 8–1, dated October 26, 2012, to the Embraer Legacy BJ MPG, MPG–1483, into Appendix 2, ''Airworthiness Limitations Requirements,'' of the Embraer Legacy BJ MPG, MPG–1483. The initial compliance times for the tasks are specified in paragraphs (g)(3)(i) and (g)(3)(ii) of this AD.

(i) For tasks with reference numbers 28–50–01–220–001–A02, 28–50–08–212–001–A00, 28–50–09–212–001–A00, and 28–50–10–212–001–A00, at the later of the times specified in paragraph (g)(3)(i)(A) or (g)(3)(i)(B) of this AD.

(A) Before the accumulation of 10,000 total flight hours or within 48 months since the date of issuance of the original Brazilian standard airworthiness certificate or date of issuance of the original Brazilian export certificate of airworthiness, whichever occurs first.

(B) Within 60 months after the effective date of this AD.

(ii) For task reference number 28–50–01–720–001–A00, at the later of the times specified in paragraph (g)(3)(ii)(A) or (g)(3)(ii)(B) of this AD.

(A) Before the accumulation of 20,000 total flight hours or within 96 months since the date of issuance of the original Brazilian standard airworthiness certificate or date of issuance of the original Brazilian export certificate of airworthiness, whichever occurs first.

(B) Within 60 months after the effective date of this AD.

(h) Incorporation of TRs Into General Revisions

When the information from Embraer TR 8–1, dated October 26, 2012; TR 8–2, dated December 5, 2012; and TR 8–3, dated April 8, 2013; to the Embraer Legacy BJ MPG, MPG–1483, has been included in the general revisions of Embraer Legacy BJ MPG, MPG–1483, the general revisions may be inserted in the MPG, provided that the relevant information in the general revision is identical to that in Embraer TR 8–1, dated October 26, 2012; TR 8–2, dated December 5, 2012; and TR 8–3, dated April 8, 2013; and the TRs may be removed.

(i) No Alternative Actions, Intervals, and/or Critical Design Configuration Control Limitations (CDCCLs)

After accomplishing the revision required by paragraph (g) of this AD, no alternative actions (*e.g.,* inspections), intervals, and/or CDCCLs may be used unless the actions, intervals, and/or CDCCLs are approved as an alternative method of compliance (AMOC) in accordance with the procedures specified in paragraph (j)(1) of this AD.

(j) Other FAA AD Provisions

The following provisions also apply to this AD:

(1) *Alternative Methods of Compliance (AMOCs):* The Manager, International Branch, ANM–116, Transport Airplane Directorate, FAA, has the authority to approve AMOCs for this AD, if requested using the procedures found in 14 CFR 39.19. In accordance with 14 CFR 39.19, send your request to your principal inspector or local Flight Standards District Office, as appropriate. If sending information directly to the International Branch, send it to ATTN: Todd Thompson, Aerospace Engineer, International Branch, ANM–116, Transport Airplane Directorate, FAA, 1601 Lind Avenue SW., Renton, WA 98057–3356; telephone 425–227–1175; fax 425–227–1149. Information may be emailed to: *9-ANM-116-AMOC-REQUESTS@faa.gov.* Before using any approved AMOC, notify your appropriate principal inspector, or lacking a principal inspector, the manager of the local flight standards district office/certificate holding district office. The AMOC approval letter must specifically reference this AD.

(2) *Contacting the Manufacturer:* For any requirement in this AD to obtain corrective actions from a manufacturer, the action must be accomplished using a method approved by the Manager, International Branch, ANM–116, Transport Airplane Directorate, FAA; or the Agência Nacional de Aviação Civil (ANAC); or ANAC's authorized Designee. If approved by the ANAC Designee, the approval must include the Designee's authorized signature.

(k) Related Information

Refer to Mandatory Continuing Airworthiness Information (MCAI) Brazilian Airworthiness Directive 2013–12–02, effective December 27, 2013, for related information. This MCAI may be found in the AD docket on the Internet at *http://www.regulations.gov/#!documentDetail;D=FAA-2014-0586-0003.*

(l) Material Incorporated by Reference

(1) The Director of the Federal Register approved the incorporation by reference (IBR) of the service information listed in this paragraph under 5 U.S.C. 552(a) and 1 CFR part 51.

(2) You must use this service information as applicable to do the actions required by this AD, unless this AD specifies otherwise.

(i) Embraer Temporary Revision 8–1, dated October 26, 2012, to the Embraer Legacy BJ Maintenance Planning Guide (MPG), MPG–1483.

(ii) Embraer Temporary Revision 8–2, dated December 5, 2012, to the Embraer Legacy BJ MPG, MPG–1483.

(iii) Embraer Temporary Revision 8–3, dated April 8, 2013, to the Embraer Legacy BJ MPG, MPG–1483.

(3) For service information identified in this AD, contact Empresa Brasileira de Aeronautica S.A. (Embraer), Technical Publications Section (PC 060), Av. Brigadeiro Faria Lima, 2170—Putim—12227–901 São Jose dos Campos—SP—Brasil; telephone +55 12 3927–5852 or +55 12 3309–0732; fax +55 12 3927–7546; email *distrib@embraer.com.br;* Internet *http://www.flyembraer.com.*

(4) You may view this service information at the FAA, Transport Airplane Directorate, 1601 Lind Avenue SW., Renton, WA. For information on the availability of this material at the FAA, call 425–227–1221.

(5) You may view this service information that is incorporated by reference at the National Archives and Records Administration (NARA). For information on the availability of this material at NARA, call 202–741–6030, or go to: *http://www.archives.gov/federal-register/cfr/ibr-locations.html.*

Issued in Renton, Washington, on August 21, 2015.

Kevin Hull,

Acting Manager, Transport Airplane Directorate, Aircraft Certification Service.

[FR Doc. 2015–21473 Filed 9–1–15; 8:45 am]

BILLING CODE 4910–13–P

DEPARTMENT OF TRANSPORTATION

Federal Aviation Administration

14 CFR Part 39

[Docket No. FAA–2014–0583; Directorate Identifier 2013–NM–130–AD; Amendment 39–18258; AD 2015–17–25]

RIN 2120–AA64

Airworthiness Directives; Bombardier, Inc. Airplanes

AGENCY: Federal Aviation Administration (FAA), Department of Transportation (DOT).

ACTION: Final rule.

SUMMARY: We are adopting a new airworthiness directive (AD) for certain Bombardier, Inc. Model DHC–8–400 series airplanes. This AD was prompted by reports of chafing of the fuel lines due to contact with the surrounding structures in the fuel tank. This AD requires replacing and modifying fuel lines, revising the maintenance or inspection program, as applicable, to include critical design configuration control limitations (CDCCL) and airworthiness limitation (AWL) items, and, for certain airplanes, removing certain clamps and mounting hardware. We are issuing this AD to prevent chafing of the fuel lines in the fuel tank, which could result in potential ignition sources in the fuel tank in the event of a lightning strike and consequent fire or explosion.

DATES: This AD becomes effective October 7, 2015.

The Director of the Federal Register approved the incorporation by reference of certain publications listed in this AD as of October 7, 2015.

ADDRESSES: You may examine the AD docket on the Internet at *http://www.regulations.gov/#!docketDetail;D=FAA-2014-0583* or in person at the Docket Management Facility, U.S. Department of Transportation, Docket Operations, M–30, West Building Ground Floor, Room W12–140, 1200 New Jersey Avenue SE., Washington, DC.

For service information identified in this AD, contact Bombardier, Inc., Q-Series Technical Help Desk, 123 Garratt Boulevard, Toronto, Ontario M3K 1Y5, Canada; telephone 416–375–4000; fax 416–375–4539; email *thd.qseries@aero.bombardier.com;* Internet *http://www.bombardier.com.* You may view this referenced service information at the FAA, Transport Airplane Directorate, 1601 Lind Avenue SW., Renton, WA. For information on the availability of this material at the

FAA, call 425–227–1221. It is also available on the Internet at *http://www.regulations.gov* by searching for and locating Docket No. FAA–2014–0583.

FOR FURTHER INFORMATION CONTACT: Kent Fredrickson, Aerospace Engineer, Propulsion and Services Branch, ANE–173, FAA, New York Aircraft Certification Office, 1600 Stewart Avenue, Suite 410, Westbury, NY 11590; telephone 516–228–7364; fax 516–794–5531.

SUPPLEMENTARY INFORMATION:

Discussion

We issued a notice of proposed rulemaking (NPRM) to amend 14 CFR part 39 by adding an AD that would apply to certain Bombardier, Inc. Model DHC–8–400 series airplanes. The NPRM published in the **Federal Register** on August 26, 2014 (79 FR 50860).

Transport Canada Civil Aviation (TCCA), which is the aviation authority for Canada, has issued Canadian Airworthiness Directive CF–2013–09R1, dated May 28, 2013 (referred to after this as the Mandatory Continuing Airworthiness Information, or ''the MCAI''), to correct an unsafe condition for certain Bombardier, Inc. Model DHC–8–400 series airplanes. The MCAI states:

> Reports from operators have revealed a number of instances of chafing of the fuel lines due to contact with the surrounding structures in the fuel tank. An internal audit conducted by Bombardier revealed a number of locations in the fuel tank where low clearances were noted between fuel lines and the surrounding structure. Low clearances between fuel lines and the surrounding structures may result in ignition sources in the fuel tank in the event of a lightning strike, creating an unacceptable level of safety.
>
> Bombardier had issued Service Bulletin (SB) 84–28–09 to introduce new fuel line assemblies that include new fuel lines and Teflon protective sleeves, and SBs 84–28–10 and 84–28–13 to remove unnecessary hardware in the wing fuel tanks, in order to eliminate potential fouling conditions on the affected fuel lines.
>
> Upon an operator's incorporation of SB 84–28–09, an additional fouling condition was identified on the post-modification fuel lines. In order to address this concern on the aeroplane, Bombardier has issued SBs 84–28–14 and 84–28–15, along with ModSum IS4Q2800012 to rectify this problem.
>
> This [Canadian] AD mandates the replacement of fuel lines and the installation of fuel line Teflon protective sleeves. In addition, the fuel line Teflon protective sleeves have been added to the Critical Design Configuration Control Limitations (CDCCL) along with the introduction of associated Fuel System Limitations tasks, to ensure integrity of the new assembly.
>
> Since the original issue of this [Canadian] AD, it was found that there were editorial errors in Parts IB and II A of this [Canadian] AD. In addition, the Temporary Revisions (TR) Airworthiness Limitation Items (ALI)–111/–112 ''referenced'' in Parts III and IV of this AD had been superseded by later revisions. This [Canadian] AD is revised to correct the editorial errors and accept the later TR approved by Transport Canada.

You may examine the MCAI in the AD docket on the Internet at *http://www.regulations.gov/#!documentDetail;D=FAA-2014-0583-0002.*

Comments

We gave the public the opportunity to participate in developing this AD. The following presents the comments received on the NPRM (79 FR 50860, August 26, 2014) and the FAA's response to each comment.

Request To Refer to Revised Service Information

All Nippon Airways (ANA) and Horizon Air requested that we revise paragraph (g) of the proposed AD (79 FR 50860, August 26, 2014) to refer to the following service information:

- Bombardier Service Bulletin 84–28–14, Revision A, dated June 9, 2014
- Bombardier Service Bulletin 84–28–09, Revision D, January 29, 2013
- Bombardier Service Bulletin 84–28–15, dated August 17, 2012

Horizon also requested that we revise paragraph (n) of the proposed AD (79 FR 50860, August 26, 2014) to provide credit for the prior accomplishment of the actions specified in Bombardier Service Bulletin 84–28–14, dated August 17, 2012.

We agree with the requests and have revised paragraphs (g)(1), (g)(2)(i), (g)(2)(ii), and (m) of this AD accordingly. We have also redesignated paragraph (n) of the proposed AD (79 FR 50860, August 26, 2014) as paragraph (n)(1) of this AD, and added new paragraph (n)(2) to this AD to indicate the new credit service information.

Request To Clarify Certain Affected Airplanes

ANA requested that we correct the identity of the affected airplanes in paragraph (g)(2) of the proposed AD (79 FR 50860, August 26, 2014). Although paragraph (g)(2) of the NPRM specified airplanes on which ModSum 4–113643 ''was incorporated'' in production, ANA noted that this requirement should apply to airplanes on which ModSum 4–113643 ''was not incorporated'' in production. ANA noted that ModSum 4–113643 is equivalent to the Bombardier Service Bulletin 84–28–09.

We agree with the request. The intent of the NPRM (79 FR 50860, August 26, 2014) was to include only airplanes on which neither the ModSum nor the corresponding service bulletin was done. We have revised paragraph (g)(2) of this AD accordingly.

Request To Exclude Specific Access and Close Requirements

Horizon Air requested that we revise paragraphs (g) and (i) of the proposed AD (79 FR 50860, August 26, 2014) to exclude the Job Set-up and the Close Out sections in certain service information, because these actions do not directly correct the unsafe condition. Horizon Air stated that requiring the actions in these sections restricts an operator's ability to do other maintenance actions concurrently with the actions required by this AD.

We agree to revise paragraphs (g) and (i) of this AD to specify only the actions in paragraph B., ''Procedures,'' which correct the unsafe condition.

Request To Allow Use of Later Revisions of Service Information

ANA requested that we allow use of ''later revisions'' of the service information, as done in the MCAI.

We disagree with the request. We cannot use the phrase ''or later revisions'' in an AD when referring to service documents because doing so violates Office of the Federal Register (OFR) regulations for approval of materials ''incorporated by reference'' in rules. See 1 CFR 51.1(f). In general terms, we are required by these OFR regulations to either publish the service document contents as part of the actual AD language; or submit the service document to the OFR for approval as ''referenced'' material, in which case we may refer to such material in the text of an AD. The AD may refer to service documents only if the OFR has approved them for incorporation by reference. See 1 CFR part 51.

To allow operators to use later revisions of the referenced document (issued after publication of the AD), either we must revise the AD to refer to specific later revisions, or operators must request approval to use later revisions as an alternative method of compliance with this AD under the provisions of paragraph (o)(1) of this AD. We have not changed this AD regarding this issue.

Conclusion

We reviewed the relevant data, considered the comments received, and determined that air safety and the public interest require adopting this AD with the changes described previously and minor editorial changes. We have determined that these minor changes:

• Are consistent with the intent that was proposed in the NPRM (79 FR 50860, August 26, 2014) for correcting the unsafe condition; and

• Do not add any additional burden upon the public than was already proposed in the NPRM (79 FR 50860, August 26, 2014).

We also determined that these changes will not increase the economic burden on any operator or increase the scope of this AD.

Related Service Information Under 1 CFR Part 51

Bombardier has issued the following service information:

• Service Bulletin 84–28–09, Revision D, dated January 29, 2013, which describes procedures for replacing fuel lines, adding Teflon tubing to certain fuel lines in the fuel tank, and contacting the manufacturer for certain corrective actions.

• Service Bulletin 84–28–10, Revision B, dated March 19, 2013, which describes procedures for inspecting for the presence of certain clamps and hardware and, if those are present, removing those certain clamps and mounting hardware.

• Service Bulletin 84–28–13, dated August 17, 2012, which describes procedures for removing certain clamps and mounting hardware.

• Service Bulletin 84–28–14, Revision A, dated June 9, 2014, which describes procedures for replacing a tube assembly.

• Service Bulletin 84–28–15, dated August 17, 2012, which describes procedures for replacing fuel lines, adding Teflon tubing to certain fuel lines in the fuel tank, and contacting the manufacturer for certain corrective actions.

• Temporary Revision ALI–111, dated January 11, 2011, to Section 4–1, ''Fuel System Limitations,'' of Part 2, ''Airworthiness Limitation Items,'' of the Airworthiness Limitation Items section of Bombardier Q400 Dash 8 Maintenance Requirements Manual PSM 1–84–7, which describes updates to the fuel system limitations for inspections of the Teflon sleeve on the fuel tank vent lines.

• Temporary Revision ALI–112, dated January 11, 2011, to Section 5–1, ''Critical Design Configuration Control Limitations,'' of Part 2, ''Airworthiness Limitation Items,'' of the Airworthiness Limitation Items section of Bombardier Q400 Dash 8 Maintenance Requirements Manual PSM 1–84–7, which describes updates to the critical design configuration control limitations on Teflon protective sleeves on fuel vent lines inside the fuel tanks.

This service information is reasonably available because the interested parties have access to it through their normal course of business or by the means identified in the **ADDRESSES** section of this NPRM.

Costs of Compliance

We estimate that this AD affects 72 airplanes of U.S. registry. We also estimate that it will take about 80 work-hours per product to comply with the basic requirements of this AD. The average labor rate is $85 per work-hour. Required parts will cost about $2,845 per product. Based on these figures, we estimate the cost of this AD on U.S. operators to be $694,440, or $9,645 per product.

Authority for This Rulemaking

Title 49 of the United States Code specifies the FAA's authority to issue rules on aviation safety. Subtitle I, section 106, describes the authority of the FAA Administrator. ''Subtitle VII: Aviation Programs,'' describes in more detail the scope of the Agency's authority.

We are issuing this rulemaking under the authority described in ''Subtitle VII, Part A, Subpart III, Section 44701: General requirements.'' Under that section, Congress charges the FAA with promoting safe flight of civil aircraft in air commerce by prescribing regulations for practices, methods, and procedures the Administrator finds necessary for safety in air commerce. This regulation is within the scope of that authority because it addresses an unsafe condition that is likely to exist or develop on products identified in this rulemaking action.

Regulatory Findings

We determined that this AD will not have federalism implications under Executive Order 13132. This AD will not have a substantial direct effect on the States, on the relationship between the national government and the States, or on the distribution of power and responsibilities among the various levels of government.

For the reasons discussed above, I certify that this AD:

1. Is not a ''significant regulatory action'' under Executive Order 12866;

2. Is not a ''significant rule'' under the DOT Regulatory Policies and Procedures (44 FR 11034, February 26, 1979);

3. Will not affect intrastate aviation in Alaska; and

4. Will not have a significant economic impact, positive or negative, on a substantial number of small entities under the criteria of the Regulatory Flexibility Act.

Examining the AD Docket

You may examine the AD docket on the Internet at *http://www.regulations.gov/#!docketDetail;D=FAA-2014-0583;* or in person at the Docket Management Facility between 9 a.m. and 5 p.m., Monday through Friday, except Federal holidays. The AD docket contains this AD, the regulatory evaluation, any comments received, and other information. The street address for the Docket Operations office (telephone 800–647–5527) is in the **ADDRESSES** section.

List of Subjects in 14 CFR Part 39

Air transportation, Aircraft, Aviation safety, Incorporation by reference, Safety.

Adoption of the Amendment

Accordingly, under the authority delegated to me by the Administrator, the FAA amends 14 CFR part 39 as follows:

PART 39—AIRWORTHINESS DIRECTIVES

■ 1. The authority citation for part 39 continues to read as follows:

Authority: 49 U.S.C. 106(g), 40113, 44701.

§ 39.13 [Amended]

■ 2. The FAA amends § 39.13 by adding the following new airworthiness directive (AD):

2015–17–25 Bombardier, Inc.: Amendment 39–18258. Docket No. FAA–2014–0583; Directorate Identifier 2013–NM–130–AD.

(a) Effective Date

This AD becomes effective October 7, 2015

(b) Affected ADs

None.

(c) Applicability

This AD applies to Bombardier, Inc. Model DHC–8–400, -401, and -402 airplanes, certificated in any category, serial numbers 4001, and 4003 through 4417 inclusive.

(d) Subject

Air Transport Association (ATA) of America Code 28, Fuel.

(e) Reason

This AD was prompted by reports of chafing of the fuel lines due to contact with the surrounding structures in the fuel tank. We are issuing this AD to prevent chafing of the fuel lines in the fuel tank, which could result in potential ignition sources in the fuel tank in the event of a lightning strike and consequent fire or explosion.

(f) Compliance

Comply with this AD within the compliance times specified, unless already done.

(g) Installation of New Fuel Tube Assemblies

For airplanes having serial numbers 4001, 4003, 4004, 4006, and 4008 through 4417 inclusive: Within 6,000 flight hours or 3 years after the effective date of this AD, whichever occurs first, install new, improved fuel tube assemblies, in accordance with paragraph B., ''Procedure,'' of the Accomplishment Instructions of the applicable service information identified in paragraphs (g)(1) and (g)(2) of this AD.

(1) For airplanes on which Bombardier Service Bulletin 84–28–09 was incorporated prior to the effective date of this AD, or on which Bombardier Modification Summary (ModSum) 4–113643 was incorporated in production: Bombardier Service Bulletin 84–28–14, Revision A, dated June 9, 2014.

(2) For airplanes on which Bombardier Service Bulletin 84–28–09 was not incorporated prior to the effective date of this AD, or on which Bombardier ModSum 4–113643 was not incorporated in production, use the service information identified in paragraph (g)(2)(i) or (g)(2)(ii) of this AD.

(i) Bombardier Service Bulletin 84–28–09, Revision D, dated January 29, 2013; and Bombardier Service Bulletin 84–28–14, Revision A, dated June 9, 2014.

(ii) Bombardier Service Bulletin 84–28–15, dated August 17, 2012.

(h) Prior Incorporation of Bombardier ModSum IS4Q2800012

For airplanes on which Bombardier Service Bulletin 84–28–09, and Bombardier ModSum IS4Q2800012 were incorporated before the effective date of this AD; and for airplanes on which Bombardier ModSum 4–113643 was incorporated in production, and Bombardier ModSum IS4Q2800012 was incorporated prior to the effective date of this AD: The requirements of paragraph (g) are not required.

(i) Removal of Clamps and Mounting Hardware

For airplanes having serial numbers 4003 through 4151 inclusive, and 4332 through 4417 inclusive: Within 6,000 flight hours or 3 years after the effective date of this AD, whichever occurs first, do the actions required by paragraphs (i)(1) and (i)(2) of this AD, as applicable.

(1) For airplanes having serial numbers 4003 through 4151 inclusive, on which Bombardier ModSum IS4Q2800010 was incorporated: Inspect for the presence of certain clamps and hardware, and, if present, remove certain clamps and mounting hardware, in accordance with paragraph B., ''Procedure,'' of the Accomplishment Instructions of Bombardier Service Bulletin 84–28–10, Revision B, dated March 19, 2013.

(2) For airplanes having serial numbers 4332 through 4417 inclusive: Remove certain clamps and mounting hardware, in accordance with paragraph B., ''Procedure,'' of the Accomplishment Instructions of Bombardier Service Bulletin 84–28–13, dated August 17, 2012.

(j) Incorporation of Fuel System Limitations (FSL) Tasks

Within 60 days after the effective date of this AD, revise the maintenance or inspection program, as applicable, to incorporate the information in FSL Task Numbers 284000–406 and 284000–418 as specified in Bombardier Temporary Revision ALI–111, dated January 11, 2011, to Section 4–1, ''Fuel System Limitations,'' of Part 2, ''Airworthiness Limitation Items,'' of the Airworthiness Limitation Items section of the Airworthiness Limitation Items section of Bombardier Q400 Dash 8 Maintenance Requirements Manual PSM 1–84–7. The initial compliance time for Task 284000–418 is within 108 months or 18,000 flight hours after accomplishing the requirements of paragraph (g) of this AD, whichever occurs first, for airplanes identified in paragraphs (g)(1) and (g)(2) of this AD; or, for those airplanes identified in paragraph (h) of this AD, within 108 months or 18,000 flight hours after the incorporation of Bombardier ModSum IS4Q2800012. The maintenance program revision required by this paragraph may be done by inserting a copy of Bombardier Temporary Revision ALI–111, dated January 11, 2011, into the Airworthiness Limitation Items section of Bombardier Q400 Dash 8 Maintenance Requirements Manual PSM 1–84–7. When Bombardier Temporary Revision ALI–111, dated January 11, 2011, has been included in the general revisions of the manual, the general revisions may be inserted into the manual, and this temporary revision may be removed, provided the relevant information in the general revision is identical to that in Bombardier Temporary Revision ALI–111.

(k) Incorporation of Critical Design Configuration Control Limitations (CDCCL) Items

Within 60 days after the effective date of this AD, revise the maintenance or inspection program, as applicable, to incorporate the CDCCL items specified in Bombardier Temporary Revision ALI–112, dated January 11, 2011, to Section 5–1, ''Critical Design Configuration Control Limitations,'' of Part 2, ''Airworthiness Limitation Items,'' of the Airworthiness Limitation Items section of Bombardier Q400 Dash 8 Maintenance Requirements Manual PSM 1–84–7. The maintenance program revision required by this paragraph may be done by inserting a copy of Bombardier Temporary Revision ALI–112, dated January 11, 2011, into the Airworthiness Limitation Items section of Bombardier Q400 Dash 8 Maintenance Requirements Manual PSM 1–84–7. When Bombardier Temporary Revision ALI–112, dated January 11, 2011, has been included in the general revisions of the manual, the general revisions may be inserted into the manual, and this temporary revision may be removed, provided the relevant information in the general revision is identical to that in Bombardier Temporary Revision ALI–112.

(l) No Alternative Actions, Intervals, and CDCCLs

After the maintenance or inspection program, as applicable, has been revised as required by paragraphs (j) and (k) of this AD, no alternative actions (*e.g.,* inspections), intervals, or CDCCLs may be used unless the actions, intervals, or CDCCL are approved as an alternative method of compliance (AMOC) in accordance with the procedures specified in paragraph (o)(1) of this AD.

(m) Exception to Service Information Specifications

Where Bombardier Service Bulletin 84–28–09, Revision D, dated January 29, 2013; and Bombardier Service Bulletin 84–28–15, dated August 17, 2012; specify contacting the manufacturer for corrective action during accomplishment of the actions in those service bulletins: Before further flight, repair the discrepancy using a method approved by the Manager, New York Aircraft Certification Office (ACO), FAA; or Transport Canada Civil Aviation (TCCA); or Bombardier, Inc.'s TCCA Design Approval Organization (DAO).

(n) Credit for Previous Actions

(1) This paragraph provides credit for actions required by paragraph (i)(1) of this AD, if those actions were performed before the effective date of this AD using Bombardier Service Bulletin 84–28–10, dated December 6, 2011; or Bombardier Service Bulletin 84–28–10, Revision A, dated May 15, 2012. This service information is not incorporated by reference in this AD.

(2) This paragraph provides credit for actions required by paragraph (g) of this AD, if the corresponding actions were performed before the effective date of this AD using Bombardier Service Bulletin 84–28–14, dated August 15, 2012, which is not incorporated by reference in this AD.

(o) Other FAA AD Provisions

The following provisions also apply to this AD:

(1) *Alternative Methods of Compliance (AMOCs):* The Manager, New York ACO, ANE–170, FAA, has the authority to approve AMOCs for this AD, if requested using the procedures found in 14 CFR 39.19. In accordance with 14 CFR 39.19, send your request to your principal inspector or local Flight Standards District Office, as appropriate. If sending information directly to the ACO, send it to ATTN: Program Manager, Continuing Operational Safety, FAA, New York ACO, 1600 Stewart Avenue, Suite 410, Westbury, NY 11590; telephone 516–228–7300; fax 516–794–5531. Before using any approved AMOC, notify your appropriate principal inspector, or lacking a principal inspector, the manager of the local flight standards district office/certificate holding district office. The AMOC approval letter must specifically reference this AD.

(2) *Contacting the Manufacturer:* For any requirement in this AD to obtain corrective actions from a manufacturer, the action must be accomplished using a method approved by the Manager, New York ACO, ANE–170, FAA; or TCCA; or Bombardier, Inc.'s TCCA DAO. If approved by the DAO, the approval must include the DAO-authorized signature.

(p) Related Information

(1) Refer to Mandatory Continuing Airworthiness Information (MCAI) Canadian Airworthiness Directive CF–2013–09R1, dated May 28, 2013, for related information. This MCAI may be found in the AD docket on the Internet at *http://www.regulations.gov/#!documentDetail;D=FAA-2014-0583-0002.*

(2) Service information identified in this AD that is not incorporated by reference is available at the addresses specified in paragraphs (q)(3) and (q)(4) of this AD.

(q) Material Incorporated by Reference

(1) The Director of the Federal Register approved the incorporation by reference (IBR) of the service information listed in this paragraph under 5 U.S.C. 552(a) and 1 CFR part 51.

(2) You must use this service information as applicable to do the actions required by this AD, unless this AD specifies otherwise.

(i) Bombardier Service Bulletin 84–28–09, Revision D, dated January 29, 2013.

(ii) Bombardier Service Bulletin 84–28–10, Revision B, dated March 19, 2013.

(iii) Bombardier Service Bulletin 84–28–13, dated August 17, 2012.

(iv) Bombardier Service Bulletin 84–28–14, Revision A, dated June 9, 2014.

(v) Bombardier Service Bulletin 84–28–15, dated August 17, 2012.

(vi) Bombardier Temporary Revision ALI–111, dated January 11, 2011, to Section 4–1, ''Fuel System Limitations,'' of Part 2, ''Airworthiness Limitation Items,'' of the Airworthiness Limitation Items section of Bombardier Q400 Dash 8 Maintenance Requirements Manual PSM 1–84–7.

(vii) Bombardier Temporary Revision ALI–112, dated January 11, 2011, to Section 5–1, ''Critical Design Configuration Control Limitations,'' of Part 2, ''Airworthiness Limitation Items,'' of the Airworthiness Limitation Items section of Bombardier Q400 Dash 8 Maintenance Requirements Manual PSM 1–84–7.

(3) For service information identified in this AD, contact Bombardier, Inc., Q-Series Technical Help Desk, 123 Garratt Boulevard, Toronto, Ontario M3K 1Y5, Canada; telephone 416–375–4000; fax 416–375–4539; email *thd.qseries@aero.bombardier.com;* Internet *http://www.bombardier.com.*

(4) You may view this service information at the FAA, Transport Airplane Directorate, 1601 Lind Avenue SW., Renton, WA. For information on the availability of this material at the FAA, call 425–227–1221.

(5) You may view this service information that is incorporated by reference at the National Archives and Records Administration (NARA). For information on the availability of this material at NARA, call 202–741–6030, or go to *http://www.archives.gov/federal-register/cfr/ibr-locations.html.*

Issued in Renton, Washington, on August 21, 2015.

Kevin Hull,

Acting Manager, Transport Airplane Directorate, Aircraft Certification Service.

[FR Doc. 2015–21472 Filed 9–1–15; 8:45 am]

BILLING CODE 4910–13–P

DEPARTMENT OF COMMERCE

Bureau of Industry and Security

15 CFR Parts 730, 732, 734, 736, 738, 740, 742, 743, 744, 746, 747, 748, 750, 752, 754, 756, 758, 760, 762, 764, 766, 768, 770, 772, and 774

[Docket No. 150813713–5713–01]

RIN 0694–AG71

Updated Statements of Legal Authority for the Export Administration Regulations To Include August 7, 2015 Extension of Emergency Declared in Executive Order 13222

AGENCY: Bureau of Industry and Security, Commerce.

ACTION: Final rule.

SUMMARY: This rule updates the Code of Federal Regulations (CFR) legal authority paragraphs in the Export Administration Regulations (EAR) to cite the most recent Presidential notice extending an emergency declared pursuant to the International Emergency Economic Powers Act. This is a procedural rule that only updates authority paragraphs of the EAR. It does not alter any right, obligation or prohibition that applies to any person under the EAR.

DATES: The rule is effective September 2, 2015.

FOR FURTHER INFORMATION CONTACT: William Arvin, Regulatory Policy Division, Bureau of Industry and Security, Telephone: (202) 482–2440.

SUPPLEMENTARY INFORMATION:

Background

Authority for all parts of the EAR other than part 745 rests, in part, on Executive Order 13222 of August 17, 2001—National Emergency with Respect to Export Control Regulations, 66 FR 44025, 3 CFR, 2001 Comp., p. 783 and on annual notices extending the emergency declared in that executive order. This rule revises the authority paragraphs for the affected parts to cite the most recent such notice, which the President signed on August 7, 2015.

This rule is purely procedural, and makes no changes other than to revise CFR authority paragraphs for the purpose of making the authority citations current. It does not change the text of any section of the EAR, nor does it alter any right, obligation or prohibition that applies to any person under the EAR.

Rulemaking Requirements

1. Executive Orders 13563 and 12866 direct agencies to assess all costs and benefits of available regulatory alternatives and, if regulation is necessary, to select regulatory approaches that maximize net benefits (including potential economic, environmental, public health and safety effects, distributive impacts, and equity). This rule does not impose any regulatory burden on the public and is consistent with the goals of Executive Order 13563. This rule has been determined to be not significant for purposes of Executive Order 12866.

2. Notwithstanding any other provision of law, no person is required to respond to, nor shall any person be subject to a penalty for failure to comply with, a collection of information subject to the requirements of the Paperwork Reduction Act of 1995 (44 U.S.C. 3501 *et seq.*) (PRA), unless that collection of information displays a currently valid Office of Management and Budget (OMB) Control Number. This rule does not involve any collection of information.

3. This rule does not contain policies with Federalism implications as that term is defined under Executive Order 13132.

4. The Department finds that there is good cause under 5 U.S.C. 553(b)(B) to waive the provisions of the Administrative Procedure Act requiring prior notice and the opportunity for public comment because they are unnecessary. This rule only updates legal authority citations. It clarifies information and is non-discretionary. This rule does not alter any right, obligation or prohibition that applies to any person under the EAR. Because these revisions are not substantive changes, it is unnecessary to provide notice and opportunity for public comment. In addition, the 30-day delay in effectiveness otherwise required by 5 U.S.C. 553(d) is not applicable because this rule is not a substantive rule. Because neither the Administrative Procedure Act nor any other law requires that notice of proposed rulemaking and an opportunity for public comment be given for this rule, the analytical requirements of the Regulatory Flexibility Act (5 U.S.C. 601 *et seq.*) are not applicable. Accordingly, no Final Regulatory Flexibility Analysis is required and none has been prepared.

List of Subjects

15 CFR Part 730

Administrative practice and procedure, Advisory committees, Exports, Reporting and recordkeeping requirements, Strategic and critical materials.

15 CFR Parts 732, 740, 748, 750, 752, and 758

Administrative practice and procedure, Exports, Reporting and recordkeeping requirements.

15 CFR Part 734

Administrative practice and procedure, Exports, Inventions and patents, Research, Science and technology.

15 CFR Parts 736, 738, 770, and 772

Exports.

15 CFR Part 742

Exports, Terrorism.

15 CFR Part 743

Administrative practice and procedure, Reporting and recordkeeping requirements.

15 CFR Part 744

Exports, Reporting and recordkeeping requirements, Terrorism.

15 CFR Parts 746 and 774

Exports, Reporting and recordkeeping requirements.

15 CFR Part 747

Administrative practice and procedure, Exports, Foreign trade, Reporting and recordkeeping requirements.

15 CFR Part 754

Agricultural commodities, Exports, Forests and forest products, Horses, Petroleum, Reporting and recordkeeping requirements.

15 CFR Part 756

Administrative practice and procedure, Exports, Penalties.

15 CFR Part 760

Boycotts, Exports, Reporting and recordkeeping requirements.

15 CFR Part 762

Administrative practice and procedure, Business and industry, Confidential business information, Exports, Reporting and recordkeeping requirements.

15 CFR Part 764

Administrative practice and procedure, Exports, Law enforcement, Penalties.

15 CFR Part 766

Administrative practice and procedure, Confidential business information, Exports, Law enforcement, Penalties.

15 CFR Part 768

Administrative practice and procedure, Exports, Reporting and recordkeeping requirements, Science and technology.

Accordingly, parts 730, 732, 734, 736, 738, 740, 742, 743, 744, 746, 747, 748, 750, 752, 754, 756, 758, 760, 762, 764, 766, 768, 770, 772 and 774 of the EAR (15 CFR parts 730–774) are amended as follows:

PART 730—[AMENDED]

■ 1. The authority citation for 15 CFR part 730 is revised to read as follows:

Authority: 50 U.S.C. app. 2401 *et seq.;* 50 U.S.C. 1701 *et seq.;* 10 U.S.C. 7420; 10 U.S.C. 7430(e); 22 U.S.C. 287c; 22 U.S.C. 2151 note; 22 U.S.C. 3201 *et seq.;* 22 U.S.C. 6004; 30 U.S.C. 185(s), 185(u); 42 U.S.C. 2139a; 42 U.S.C. 6212; 43 U.S.C. 1354; 15 U.S.C. 1824a; 50 U.S.C. app. 5; 22 U.S.C. 7201 *et seq.;* 22 U.S.C. 7210; E.O. 11912, 41 FR 15825, 3 CFR, 1976 Comp., p. 114; E.O. 12002, 42 FR 35623, 3 CFR, 1977 Comp., p. 133; E.O. 12058, 43 FR 20947, 3 CFR, 1978 Comp., p. 179; E.O. 12214, 45 FR 29783, 3 CFR, 1980 Comp., p. 256; E.O. 12851, 58 FR 33181, 3 CFR, 1993 Comp., p. 608; E.O. 12854, 58 FR 36587, 3 CFR, 1993 Comp., p. 179; E.O. 12918, 59 FR 28205, 3 CFR, 1994 Comp., p. 899; E.O. 12938, 59 FR 59099, 3 CFR, 1994 Comp., p. 950; E.O. 12947, 60 FR 5079, 3 CFR, 1995 Comp., p. 356; E.O. 12981, 60 FR 62981, 3 CFR, 1995 Comp., p. 419; E.O. 13020, 61 FR 54079, 3 CFR, 1996 Comp., p. 219; E.O. 13026, 61 FR 58767, 3 CFR, 1996 Comp., p. 228; E.O. 13099, 63 FR 45167, 3 CFR, 1998 Comp., p. 208; E.O. 13222, 66 FR 44025, 3 CFR, 2001 Comp., p. 783; E.O. 13224, 66 FR 49079, 3 CFR, 2001 Comp., p. 786; E.O. 13338, 69 FR 26751, 3 CFR, 2004 Comp., p 168; E.O. 13637 of March 8, 2013, 78 FR 16129 (March 13, 2013); Notice of September 17, 2014, 79 FR 56475 (September 19, 2014); Notice of November 7, 2014, 79 FR 67035 (November 12, 2014); Notice of January 21, 2015, 80 FR 3461 (January 22, 2015); Notice of May 6, 2015, 80 FR 26815 (May 8, 2015); Notice of August 7, 2015, 80 FR 48233 (August 11, 2015).

PART 732—[AMENDED]

■ 2. The authority citation for 15 CFR part 732 is revised to read as follows:

Authority: 50 U.S.C. app. 2401 *et seq.;* 50 U.S.C. 1701 *et seq.;* E.O. 13026, 61 FR 58767, 3 CFR, 1996 Comp., p. 228; E.O. 13222, 66 FR 44025, 3 CFR, 2001 Comp., p. 783; Notice of August 7, 2015, 80 FR 48233 (August 11, 2015).

PART 734—[AMENDED]

■ 3. The authority citation for 15 CFR part 734 is revised to read as follows:

Authority: 50 U.S.C. app. 2401 *et seq.;* 50 U.S.C. 1701 *et seq.;* E.O. 12938, 59 FR 59099, 3 CFR, 1994 Comp., p. 950; E.O. 13020, 61 FR 54079, 3 CFR, 1996 Comp., p. 219; E.O. 13026, 61 FR 58767, 3 CFR, 1996 Comp., p. 228; E.O. 13222, 66 FR 44025, 3 CFR, 2001 Comp., p. 783; E.O. 13637 of March 8, 2013, 78 FR 16129 (March 13, 2013); Notice of November 7, 2014, 79 FR 67035 (November 12, 2014); Notice of August 7, 2015, 80 FR 48233 (August 11, 2015).

PART 736—[AMENDED]

■ 4. The authority citation for 15 CFR part 736 is revised to read as follows:

Authority: 50 U.S.C. app. 2401 *et seq.;* 50 U.S.C. 1701 *et seq.;* 22 U.S.C. 2151 note; E.O. 12938, 59 FR 59099, 3 CFR, 1994 Comp., p. 950; E.O. 13020, 61 FR 54079, 3 CFR, 1996 Comp., p. 219; E.O. 13026, 61 FR 58767, 3 CFR, 1996 Comp., p. 228; E.O. 13222, 66 FR 44025, 3 CFR, 2001 Comp., p. 783; E.O. 13338, 69 FR 26751, 3 CFR, 2004 Comp., p. 168; Notice of November 7, 2014, 79 FR 67035 (November 12, 2014); Notice of May 6, 2015, 80 FR 26815 (May 8, 2015); Notice of August 7, 2015, 80 FR 48233 (August 11, 2015).

PART 738—[AMENDED]

■ 5. The authority citation for 15 CFR part 738 is revised to read as follows:

Authority: 50 U.S.C. app. 2401 *et seq.;* 50 U.S.C. 1701 *et seq.;* 10 U.S.C. 7420; 10 U.S.C. 7430(e); 22 U.S.C. 287c; 22 U.S.C. 3201 *et seq.;* 22 U.S.C. 6004; 30 U.S.C. 185(s), 185(u); 42 U.S.C. 2139a; 42 U.S.C. 6212; 43 U.S.C. 1354; 15 U.S.C. 1824a; 50 U.S.C. app. 5; 22 U.S.C. 7201 *et seq.;* 22 U.S.C. 7210; E.O. 13026, 61 FR 58767, 3 CFR, 1996 Comp., p. 228; E.O. 13222, 66 FR 44025, 3 CFR, 2001 Comp., p. 783; Notice of August 7, 2015, 80 FR 48233 (August 11, 2015).

PART 740—[AMENDED]

■ 6. The authority citation for 15 CFR part 740 is revised to read as follows:

Authority: 50 U.S.C. app. 2401 *et seq.;* 50 U.S.C. 1701 *et seq.;* 22 U.S.C. 7201 *et seq.;* E.O. 13026, 61 FR 58767, 3 CFR, 1996 Comp., p. 228; E.O. 13222, 66 FR 44025, 3 CFR, 2001 Comp., p. 783; Notice of August 7, 2015, 80 FR 48233 (August 11, 2015).

PART 742—[AMENDED]

■ 7. The authority citation for 15 CFR part 742 is revised to read as follows:

Authority: 50 U.S.C. app. 2401 *et seq.;* 50 U.S.C. 1701 *et seq.;* 22 U.S.C. 3201 *et seq.;* 42 U.S.C. 2139a; 22 U.S.C. 7201 *et seq.;* 22 U.S.C. 7210; Sec. 1503, Pub. L. 108–11, 117 Stat. 559; E.O. 12058, 43 FR 20947, 3 CFR, 1978 Comp., p. 179; E.O. 12851, 58 FR 33181, 3 CFR, 1993 Comp., p. 608; E.O. 12938, 59 FR 59099, 3 CFR, 1994 Comp., p. 950; E.O. 13026, 61 FR 58767, 3 CFR, 1996 Comp., p. 228; E.O. 13222, 66 FR 44025, 3 CFR, 2001 Comp., p. 783; Presidential Determination 2003–23 of May 7, 2003, 68 FR 26459, May 16, 2003; Notice of November 7, 2014, 79 FR 67035 (November 12, 2014); Notice of August 7, 2015, 80 FR 48233 (August 11, 2015).

PART 743—[AMENDED]

■ 8. The authority citation for 15 CFR part 743 is revised to read as follows:

Authority: 50 U.S.C. app. 2401 *et seq.;* 50 U.S.C. 1701 *et seq.;* E.O. 13222, 66 FR 44025, 3 CFR, 2001 Comp., p. 783; E.O. 13637 of March 8, 2013, 78 FR 16129 (March 13, 2013); 78 FR 16129; Notice of August 7, 2015, 80 FR 48233 (August 11, 2015).

PART 744—[AMENDED]

■ 9. The authority citation for 15 CFR part 744 is revised to read as follows:

Authority: 50 U.S.C. app. 2401 *et seq.;* 50 U.S.C. 1701 *et seq.;* 22 U.S.C. 3201 *et seq.;* 42 U.S.C. 2139a; 22 U.S.C. 7201 *et seq.;* 22 U.S.C. 7210; E.O. 12058, 43 FR 20947, 3 CFR, 1978 Comp., p. 179; E.O. 12851, 58 FR 33181, 3 CFR, 1993 Comp., p. 608; E.O. 12938, 59 FR 59099, 3 CFR, 1994 Comp., p. 950; E.O. 12947, 60 FR 5079, 3 CFR, 1995 Comp., p. 356; E.O. 13026, 61 FR 58767, 3 CFR, 1996 Comp., p. 228; E.O. 13099, 63 FR 45167, 3 CFR, 1998 Comp., p. 208; E.O. 13222, 66 FR 44025, 3 CFR, 2001 Comp., p. 783; E.O. 13224, 66 FR 49079, 3 CFR, 2001 Comp., p. 786; Notice of September 17, 2014, 79 FR 56475 (September 19, 2014); Notice of November 7, 2014, 79 FR 67035 (November 12, 2014); Notice of January 21, 2015, 80 FR 3461 (January 22, 2015); Notice of August 7, 2015, 80 FR 48233 (August 11, 2015).

PART 746—[AMENDED]

■ 10. The authority citation for 15 CFR part 746 is revised to read as follows:

Authority: 50 U.S.C. app. 2401 *et seq.;* 50 U.S.C. 1701 *et seq.;* 22 U.S.C. 287c; Sec 1503, Pub. L. 108–11, 117 Stat. 559; 22 U.S.C. 6004; 22 U.S.C. 7201 *et seq.;* 22 U.S.C. 7210; E.O. 12854, 58 FR 36587, 3 CFR, 1993 Comp., p. 614; E.O. 12918, 59 FR 28205, 3 CFR, 1994 Comp., p. 899; E.O. 13222, 66 FR 44025, 3 CFR, 2001 Comp., p. 783; E.O. 13338, 69 FR 26751, 3 CFR, 2004 Comp., p 168; Presidential Determination 2003–23 of May 7, 2003, 68 FR 26459, May 16, 2003; Presidential Determination 2007–7 of December 7, 2006, 72 FR 1899 (January 16, 2007); Notice of May 6, 2015, 80 FR 26815 (May 8, 2015); Notice of August 7, 2015, 80 FR 48233 (August 11, 2015).

PART 747—[AMENDED]

■ 11. The authority citation for 15 CFR part 747 is revised to read as follows:

Authority: 50 U.S.C. app. 2401 *et seq.;* 50 U.S.C. 1701 *et seq.;* Sec 1503, Pub. L. 108–11, 117 Stat. 559; E.O. 12918, 59 FR 28205, 3 CFR, 1994 Comp., p. 899; E.O. 13222, 66 FR 44025, 3 CFR, 2001 Comp., p. 783; Presidential Determination 2003–23 of May 7, 2003, 68 FR 26459, May 16, 2003; Notice of August 7, 2015, 80 FR 48233 (August 11, 2015).

PART 748—[AMENDED]

■ 12. The authority citation for 15 CFR part 748 is revised to read as follows:

Authority: 50 U.S.C. app. 2401 *et seq.;* 50 U.S.C. 1701 *et seq.;* E.O. 13026, 61 FR 58767, 3 CFR, 1996 Comp., p. 228; E.O. 13222, 66 FR 44025, 3 CFR, 2001 Comp., p. 783; Notice of August 7, 2015, 80 FR 48233 (August 11, 2015).

PART 750—[AMENDED]

■ 13. The authority citation for 15 CFR part 750 is revised to read as follows:

Authority: 50 U.S.C. app. 2401 *et seq.;* 50 U.S.C. 1701 *et seq.;* Sec 1503, Pub. L. 108–11, 117 Stat. 559; E.O. 13026, 61 FR 58767, 3 CFR, 1996 Comp., p. 228; E.O. 13222, 66 FR 44025, 3 CFR, 2001 Comp., p. 783; E.O. 13637 of March 8, 2013, 78 FR 16129 (March 13, 2013); Presidential Determination 2003–23 of May 7, 2003, 68 FR 26459, May 16, 2003; Notice of August 7, 2015, 80 FR 48233 (August 11, 2015).

PART 752—[AMENDED]

■ 14. The authority citation for 15 CFR part 752 is revised to read as follows:

Authority: 50 U.S.C. app. 2401 *et seq.;* 50 U.S.C. 1701 *et seq.;* E.O. 13020, 61 FR 54079, 3 CFR, 1996 Comp., p. 219; E.O. 13222, 66 FR 44025, 3 CFR, 2001 Comp., p. 783; Notice of August 7, 2015, 80 FR 48233 (August 11, 2015).

PART 754—[AMENDED]

■ 15. The authority citation for 15 CFR part 754 is revised to read as follows:

Authority: 50 U.S.C. app. 2401 *et seq.;* 50 U.S.C. 1701 *et seq.;* 10 U.S.C. 7420; 10 U.S.C. 7430(e); 30 U.S.C. 185(s), 185(u); 42 U.S.C. 6212; 43 U.S.C. 1354; 15 U.S.C. 1824a; E.O. 11912, 41 FR 15825, 3 CFR, 1976 Comp., p. 114; E.O. 13222, 66 FR 44025, 3 CFR, 2001 Comp., p. 783; Notice of August 7, 2015, 80 FR 48233 (August 11, 2015).

PART 756—[AMENDED]

■ 16. The authority citation for 15 CFR part 756 is revised to read as follows:

Authority: 50 U.S.C. app. 2401 *et seq.;* 50 U.S.C. 1701 *et seq.;* E.O. 13222, 66 FR 44025, 3 CFR, 2001 Comp., p. 783; Notice of August 7, 2015, 80 FR 48233 (August 11, 2015).

PART 758—[AMENDED]

■ 17. The authority citation for 15 CFR part 758 is revised to read as follows:

Authority: 50 U.S.C. app. 2401 *et seq.;* 50 U.S.C. 1701 *et seq.;* E.O. 13222, 66 FR 44025, 3 CFR, 2001 Comp., p. 783; Notice of August 7, 2015, 80 FR 48233 (August 11, 2015).

PART 760—[AMENDED]

■ 18. The authority citation for 15 CFR part 760 is revised to read as follows:

Authority: 50 U.S.C. app. 2401 *et seq.;* 50 U.S.C. 1701 *et seq.;* E.O. 13222, 66 FR 44025, 3 CFR, 2001 Comp., p. 783; Notice of August 7, 2015, 80 FR 48233 (August 11, 2015).

PART 762—[AMENDED]

■ 19. The authority citation for 15 CFR part 762 is revised to read as follows:

Authority: 50 U.S.C. app. 2401 *et seq.;* 50 U.S.C. 1701 *et seq.;* E.O. 13222, 66 FR 44025, 3 CFR, 2001 Comp., p. 783; Notice of August 7, 2015, 80 FR 48233 (August 11, 2015).

PART 764—[AMENDED]

■ 20. The authority citation for 15 CFR part 764 is revised to read as follows:

Authority: 50 U.S.C. app. 2401 *et seq.;* 50 U.S.C. 1701 *et seq.;* E.O. 13222, 66 FR 44025, 3 CFR, 2001 Comp., p. 783; Notice of August 7, 2015, 80 FR 48233 (August 11, 2015).

PART 766—[AMENDED]

■ 21. The authority citation for 15 CFR part 766 is revised to read as follows:

Authority: 50 U.S.C. app. 2401 *et seq.;* 50 U.S.C. 1701 *et seq.;* E.O. 13222, 66 FR 44025, 3 CFR, 2001 Comp., p. 783; Notice of August 7, 2015, 80 FR 48233 (August 11, 2015).

PART 768—[AMENDED]

■ 22. The authority citation for 15 CFR part 768 is revised to read as follows:

Authority: 50 U.S.C. app. 2401 *et seq.;* 50 U.S.C. 1701 *et seq.;* E.O. 13222, 66 FR 44025, 3 CFR, 2001 Comp., p. 783; Notice of August 7, 2015, 80 FR 48233 (August 11, 2015).

PART 770—[AMENDED]

■ 23. The authority citation for 15 CFR part 770 is revised to read as follows:

Authority: 50 U.S.C. app. 2401 *et seq.;* 50 U.S.C. 1701 *et seq.;* E.O. 13222, 66 FR 44025, 3 CFR, 2001 Comp., p. 783; Notice of August 7, 2015, 80 FR 48233 (August 11, 2015).

PART 772—[AMENDED]

■ 24. The authority citation for 15 CFR part 772 is revised to read as follows:

Authority: 50 U.S.C. app. 2401 *et seq.;* 50 U.S.C. 1701 *et seq.;* E.O. 13222, 66 FR 44025, 3 CFR, 2001 Comp., p. 783; Notice of August 7, 2015, 80 FR 48233 (August 11, 2015).

PART 774—[AMENDED]

■ 25. The authority citation for 15 CFR part 774 is revised to read as follows:

Authority: 50 U.S.C. app. 2401 *et seq.;* 50 U.S.C. 1701 *et seq.;* 10 U.S.C. 7420; 10 U.S.C. 7430(e); 22 U.S.C. 287c, 22 U.S.C. 3201 *et seq.;* 22 U.S.C. 6004; 30 U.S.C. 185(s), 185(u); 42 U.S.C. 2139a; 42 U.S.C. 6212; 43 U.S.C. 1354; 15 U.S.C. 1824a; 50 U.S.C. app. 5; 22 U.S.C. 7201 *et seq.;* 22 U.S.C. 7210; E.O. 13026, 61 FR 58767, 3 CFR, 1996 Comp., p. 228; E.O. 13222, 66 FR 44025, 3 CFR, 2001 Comp., p. 783; Notice of August 7, 2015, 80 FR 48233 (August 11, 2015).

Dated: August 25, 2015.

Kevin J. Wolf,

Assistant Secretary for Export Administration.

[FR Doc. 2015–21683 Filed 9–1–15; 8:45 am]

BILLING CODE 3510–33–P

DEPARTMENT OF COMMERCE

Bureau of Industry and Security

15 CFR Part 740

[Docket No. 150720622–5622–01]

RIN 0694–AG63

Revisions to License Exception Availability for Consumer Communications Devices and Licensing Policy for Civil Telecommunications-Related Items Such as Infrastructure Regarding Sudan; Correction

AGENCY: Bureau of Industry and Security, Commerce.

ACTION: Final rule; correction.

SUMMARY: The Bureau of Industry and Security publishes this rule to correct an error in License Exception Temporary imports, exports, reexports, and transfers (in-country) (TMP) to make certain consumer communications devices and related software eligible for temporary export and reexport to Sudan as ''tools of trade.'' This error was introduced in a final rule published in February 2015 that amended the Export Administration Regulations to authorize License Exception Consumer Communications Devices (CCD) for use in Sudan and made changes to License Exception TMP. BIS is publishing this rule to facilitate use of employer-owned devices such as cell phones, Wi-Fi-equipped computers and tablets by persons engaged in humanitarian efforts in Sudan.

DATES: The rule is effective September 2, 2015.

FOR FURTHER INFORMATION CONTACT: Theodore Curtin, telephone (202) 482–4252, email *theodore.curtin@bis.doc.gov.*

SUPPLEMENTARY INFORMATION:

Background

In general, items listed on the Commerce Control List with anti-terrorism stated as a reason for control require a license for export or reexport, even temporarily, to Sudan. Some limited exceptions to this requirement exist. One such exception, License Exception Baggage (BAG), allows travelers to Sudan to take with them for their personal use or use by family members their personally-owned consumer communications devices such as cell phones, Wi-Fi- enabled personal computers, global positioning systems and related software. Another exception, License Exception Consumer Communications Devices (CCD), allows the export and reexport of such devices and related software for use by non-governmental organizations or individuals in Sudan. Sudan was added as an eligible destination under CCD in a final rule published on February 18, 2015 (the February 2015 rule) (see ''License Exception Availability for Consumer Communications Devices and Licensing Policy for Civil Telecommunications-Related Items Such as Infrastructure Regarding Sudan,'' (80 FR 8520)). For several years prior to the February 2015 rule, a third exception, Temporary imports, exports, reexports, and transfers (in-country) (TMP), allowed non-governmental organizations engaged in humanitarian work in Sudan and their individual staff members, employees, or contractors to export or reexport temporarily to Sudan employer-owned consumer communications devices and related software for use as ''tools of trade.'' *See* 70 FR 8251 (Feb. 18, 2005) (authorizing exports of such items) and 73 FR 10668 (Feb. 28, 2008) (authorizing reexports of such items).

The February 2015 amendment to the Export Administration Regulations (EAR) made consumer communications devices and related software available under License Exception CCD for export and reexport to non-governmental organizations and individuals in Sudan generally (with no requirement that the export or reexport be temporary). That rule was intended to foster communications to, from, and among the people of Sudan. Because the commodities and software would be available under License Exception CCD to all individuals in Sudan (including persons traveling to Sudan on a temporary basis), the February 2015 rule removed as unnecessary paragraph (a)(2) of License Exception TMP, which had authorized the temporary export and reexport of these items by non-governmental organizations engaged in humanitarian work in Sudan and their individual staff members, employees, or contractors. In addition, in an earlier rule amending License Exception CCD, which up to that time had authorized only donations made to individuals and non-governmental organizations Cuba, the phrase ''either sold or donated'' was added to the paragraph describing the authorization of the export and reexport of consumer communications devices and related software under the license exception. *See* 80 FR 2286 (Jan. 16, 2015).

Although the intent was to state that the devices or software no longer had to be donated, the addition of the ''either sold or donated'' language to License Exception CCD in January 2015, in combination with the removal of paragraph (a)(2) of license exception TMP by the February 2015 rule on Sudan, created problems for non-governmental organizations that send personnel to Sudan for humanitarian activities. The employer-owned devices that such personnel use in Sudan are neither sold nor donated in connection with the staff member's, employee's or contractor's travel to Sudan. As an unintended consequence of the interplay of the changes made pursuant to the two recent rules, such travelers who seek to engage in the humanitarian activities for which temporary exports and reexports have been authorized by License Exception TMP since 2005 need licenses to take to Sudan temporarily their employer-owned communication devices and software even though the same items could be exported or reexported to Sudan under a license exception if personally owned by the travelers or if being sold or donated to a non-governmental organization or to any individual in Sudan.

This final rule amends the EAR to correct License Exception TMP to clarify BIS's intent to authorize temporary export and reexport of employer-owned consumer communications devices and related software as tools of trade to Sudan under the license exception. The amended provision refers to the list of consumer communications devices and software that is contained in License Exception CCD (Section 740.19(b)) and notes that all other requirements and limitations found in License Exception TMP apply to exports and reexports of such items.

Rulemaking Requirements

1. Executive Orders 13563 and 12866 direct agencies to assess all costs and benefits of available regulatory alternatives and, if regulation is necessary, to select regulatory approaches that maximize net benefits (including potential economic, environmental, public health and safety effects, distributive impacts, and equity). This rule does not impose any regulatory burden on the public and is consistent with the goals of Executive Order 13563. This rule has been determined to be not significant for purposes of Executive Order 12866.

2. Notwithstanding any other provision of law, no person is required to respond to, nor shall any person be subject to a penalty for failure to comply with, a collection of information subject to the requirements of the Paperwork Reduction Act of 1995 (44 U.S.C. 3501 *et seq.*) (PRA), unless that collection of information displays a currently valid Office of Management and Budget (OMB) control number. This rule involves a collection of information approved under OMB control number 0694–0088, Simplified Network Application Processing+ System (SNAP+) and the Multipurpose Export License Application, which carries an annual estimated burden of 31,833 hours. BIS believes that this rule will have no material impact on that burden. To the extent that it has any impact at all, the impact would be to reduce the burden because this rule makes some transactions that would otherwise require a license eligible for a license exception.

3. This rule does not contain policies with Federalism implications as that term is defined under Executive Order 13132.

4. BIS finds good cause under 5 U.S.C. 553(b)(B) to waive prior notice of proposed rulemaking and the opportunity for public comment because it is impracticable and contrary to the public interest. This rule corrects an error in License Exception TMP to make certain consumer communications devices and related software eligible for temporary export and reexport to Sudan as ''tools of trade.'' Due to a drafting error in the February 2015 rule, license exception availability under the EAR was eliminated for employer-owned consumer communications devices and related software being exported or reexported temporarily to Sudan for use by staff members, employees, and contractors of non-governmental organizations engaged in humanitarian activities. Those same devices may be exported or reexported temporarily to Sudan under a license exception if they are owned personally by the traveler. They may also be exported or reexported permanently to Sudan under a license exception if they are to be sold or donated to a non-governmental organization or individual in Sudan. This rule is necessary in order to ensure that persons traveling to Sudan benefit from clarity on the point addressed by this rule, as it would enable them to bring certain items with them for use in their humanitarian activities in the country without having to apply for a license. Maintaining a license requirement for this limited category of exports and reexports is contrary to the public interest as it would hamper the activities of non-governmental organizations engaged in humanitarian work without providing any corresponding benefit to the foreign policy goals that export controls are intended to meet. It would be impracticable to delay this rule to allow for notice and comment, as there is an urgent need for timely clarification consistent with the purpose of the February 2015 rule, which sought to expand the scope of exports and reexports to Sudan that may occur without the need to obtain a license.

BIS also finds good cause under 5 U.S.C. 553(d)(3) to waive the 30-day delay in effectiveness. This rule does not impose any new regulatory burden on any person. It merely makes clear that certain employer-owned consumer communications devices and software may be exported or reexported temporarily to Sudan as tools of trade by persons traveling to Sudan. No person would be required to change any of its existing practices as a result of this rule. However, persons traveling to Sudan would benefit from clarity on the point addressed by this rule, as it would enable them to bring certain items with them for use in their humanitarian activities in the country without having to apply for a license. Because this rule imposes no new burden while providing a benefit to some persons, delaying implementation would be contrary to the public interest.

List of Subjects in 15 CFR Part 740

Administrative practice and procedure, Exports, Reporting and recordkeeping requirements.

For the reasons set forth in the preamble, the Export Administration Regulations (15 CFR parts 730–774) are amended as follows:

PART 740—[AMENDED]

■ 1. The authority citation for 15 CFR part 740 continues to read as follows:

Authority: 50 U.S.C. app. 2401 *et seq.;* 50 U.S.C. 1701 *et seq.;* 22 U.S.C. 7201 *et seq.;* E.O. 13026, 61 FR 58767, 3 CFR, 1996 Comp., p. 228; E.O. 13222, 66 FR 44025, 3 CFR, 2001 Comp., p. 783; Notice of August 7, 2015, 80 FR 48233 (August 11, 2015).

■ 2. In § 740.9, paragraph (a)(2) is added to read as follows:

§ 740.9 Temporary imports, exports, reexports, and transfers (in-country) (TMP).

* * * * *

(a) * * *

(2) *Sudan.* Notwithstanding the exclusion of destinations in Country Group E:1 in paragraphs (a)(1) and (3) of this section, items listed in § 740.19(b) of the EAR may be exported or reexported as tools of trade to Sudan. All other requirements and limitations of this paragraph (a) apply to such exports and reexports.

* * * * *

Dated: August 25, 2015.

Kevin J. Wolf,

Deputy Assistant Secretary for Export Administration.

[FR Doc. 2015–21695 Filed 9–1–15; 8:45 am]

BILLING CODE 3510–33–P

DEPARTMENT OF COMMERCE

Bureau of Industry and Security

15 CFR Part 744

[Docket No. 150604505–5505–01]

RIN 0694–AG65

Addition of Certain Persons to the Entity List

AGENCY: Bureau of Industry and Security, Commerce.

ACTION: Final rule.

SUMMARY: The Bureau of Industry and Security (BIS) amends the Export Administration Regulations (EAR) by adding twenty-nine persons under thirty-three entries to the Entity List. The twenty-nine persons who are added to the Entity List have been determined by the U.S. Government to be acting contrary to the national security or foreign policy interests of the United States. BIS is taking this action to ensure the efficacy of existing sanctions on the Russian Federation (Russia) for violating international law and fueling the conflict in eastern Ukraine. These persons will be listed on the Entity List under the destinations of Crimea region of Ukraine, Cyprus, Finland, Romania, Russia, Switzerland, Ukraine, and the United Kingdom. This final rule also revises the reference to Crimea (occupied) on the Entity List to conform to other references in the EAR that refer to the Crimea region of Ukraine.

DATES: This rule is effective September 2, 2015.

FOR FURTHER INFORMATION CONTACT: Chair, End-User Review Committee, Office of the Assistant Secretary, Export Administration, Bureau of Industry and Security, Department of Commerce, Phone: (202) 482–5991, Fax: (202) 482–3911, Email: *ERC@bis.doc.gov.*

SUPPLEMENTARY INFORMATION:

Background

The Entity List (Supplement No. 4 to Part 744 of the EAR) identifies entities

and other persons reasonably believed to be involved in, or that pose a significant risk of being or becoming involved in, activities that are contrary to the national security or foreign policy of the United States. The EAR imposes additional licensing requirements on, and limits the availability of most license exceptions for, exports, reexports, and transfers (in-country) to those persons or entities listed on the Entity List. The license review policy for each listed entity is identified in the License Review Policy column on the Entity List and the impact on the availability of license exceptions is described in the **Federal Register** notice adding entities or other persons to the Entity List. BIS places entities on the Entity List based on certain sections of part 744 (Control Policy: End-User and End-Use Based) and part 746 (Embargoes and Other Special Controls) of the EAR.

The End-user Review Committee (ERC) is composed of representatives of the Departments of Commerce (Chair), State, Defense, Energy, and where appropriate, the Treasury. The ERC makes decisions to add an entry to the Entity List by majority vote and to remove or modify an entry by unanimous vote. The Departments represented on the ERC have approved these changes to the Entity List.

Entity List Additions

Additions to the Entity List

This rule implements the decision of the ERC to add twenty-nine persons under thirty-three entries to the Entity List. These twenty-nine persons are being added on the basis of § 744.11 (License requirements that apply to entities acting contrary to the national security or foreign policy interests of the United States) of the EAR. The thirty-three entries to the Entity List are located in the Crimea region of Ukraine, Cyprus, Finland, Romania, Russia, Switzerland, Ukraine, and the United Kingdom (British Virgin Islands). There are thirty-three entries for the twenty-nine persons because two persons are listed in two locations and one person is listed in three locations, resulting in four additional entries.

Under § 744.11(b) (Criteria for revising the Entity List) of the EAR, persons for whom there is reasonable cause to believe, based on specific and articulable facts, have been involved, are involved, or pose a significant risk of being or becoming involved in, activities that are contrary to the national security or foreign policy interests of the United States and those acting on behalf of such persons may be added to the Entity List. The persons being added to the Entity List have been determined to be involved in activities that are contrary to the national security or foreign policy interests of the United States. Specifically, in this rule, BIS adds persons to the Entity List for violating international law and fueling the conflict in eastern Ukraine. These additions ensure the efficacy of existing sanctions on Russia. The particular additions to the Entity List and related authorities are as follows.

A. Entity Addition Consistent With Executive Order 13660

One entity is added based on activities that are described in Executive Order 13660 (79 FR 13493), *Blocking Property of Certain Persons Contributing to the Situation in Ukraine,* issued by the President on March 6, 2014. As described in the Order, the President found that the actions and policies of persons who have asserted governmental authority in Crimea without the authorization of the Government of Ukraine undermine democratic processes and institutions in Ukraine; threaten its peace, security, stability, sovereignty, and territorial integrity; and contribute to the misappropriation of its assets, and thereby constitute an unusual and extraordinary threat to the national security and foreign policy of the United States. The President also declared a national emergency to deal with that threat.

Executive Order 13660 blocks all property and interests in property that are in the United States, that come within the United States, or that are or come within the possession or control of any United States person (including any foreign branch) of any person determined by the Secretary of the Treasury, in consultation with the Secretary of State, to be responsible for or complicit in, or to have engaged in, directly or indirectly, misappropriation of state assets of Ukraine or of an economically significant entity in Ukraine, among other activities. Under Section 8 of the Order, all agencies of the United States Government are directed to take all appropriate measures within their authority to carry out the provisions of the Order.

The Department of the Treasury's Office of Foreign Assets Control (OFAC), pursuant to Executive Order 13660, has designated the following person: Private Joint-Stock Company Mako Holding. In conjunction with that designation, the Department of Commerce adds Private Joint-Stock Company Mako Holding to the Entity List under this rule and imposes a license requirement for exports, reexports, or transfers (in-country) to this blocked person. This license requirement implements an appropriate measure within the authority of the EAR to carry out the provisions of Executive Order 13660.

Private Joint-Stock Company Mako Holding is added to the Entity List under Executive Order 13660 because it is owned or controlled by, or has acted or purported to act for or on behalf of, directly or indirectly a person whose property and interests are blocked pursuant to that Order, Oleksandr Viktorovych Yanukovych. Oleksandr Yanukovych is responsible for or complicit in, or has engaged in, directly or indirectly, misappropriation of state assets of Ukraine or of an economically significant entity in Ukraine.

Therefore, pursuant to § 744.11 of the EAR, the conduct of this one person raises sufficient concern that prior review of exports, reexports, or transfers (in-country) of all items subject to the EAR involving this person, and the possible imposition of license conditions or license denials on shipments to this persons, will enhance BIS's ability to protect the foreign policy and national security interests of the United States.

B. Entity Additions Consistent With Executive Order 13661

Seven entities are added based on activities that are described in Executive Order 13661 (79 FR 15533), *Blocking Property of Additional Persons Contributing to the Situation in Ukraine,* issued by the President on March 16, 2014. This Order expanded the scope of the national emergency declared in Executive Order 13660, finding that the actions and policies of the Government of the Russian Federation with respect to Ukraine—including the deployment of Russian military forces in the Crimea region of Ukraine—undermine democratic processes and institutions in Ukraine; threaten its peace, security, stability, sovereignty, and territorial integrity; and contribute to the misappropriation of its assets, and thereby constitute an unusual and extraordinary threat to the national security and foreign policy of the United States.

Executive Order 13661 includes a directive that all property and interests in property that are in the United States, that hereafter come within the United States, or that are or thereafter come within the possession or control of any United States person (including any foreign branch) of the following persons are blocked and may not be transferred, paid, exported, withdrawn, or otherwise

dealt in: persons determined by the Secretary of the Treasury, in consultation with the Secretary of State to have either materially assisted, sponsored or provided financial, material or technological support for, or goods and services to or in support of a senior official of the government of the Russian Federation or operate in the defense or related materiel sector in Russia. Under Section 8 of the Order, all agencies of the United States Government are directed to take all appropriate measures within their authority to carry out the provisions of the Order.

The Department of the Treasury's Office of Foreign Assets Control, pursuant to Executive Order 13661, on behalf of the Secretary of the Treasury, and in consultation with the Secretary of State, has designated the following seven persons: Airfix Aviation Oy, IPP Oil Products (Cyprus) Limited, Open Joint Stock Company Kontsern Izhmash, Izhevsky Mekhanichesky Zavod JSC, Set Petrochemicals Oy, Southeast Trading Oy, and Southport Management Services Limited. In conjunction with those designations, the Department of Commerce adds all seven of those entities to the Entity List under this rule, and imposes a license requirement for exports, reexports, or transfers (in-country) to these persons. This license requirement implements an appropriate measure within the authority of the EAR to carry out the provisions of Executive Order 13661.

Five of the persons added to the Entity List under Executive Order 13661 meet the criteria of Section 1, subparagraph D of the Order because they are linked to the provision of material support to a person previously designated by OFAC, Gennady Timchenko: Airfix Aviation Oy, IPP Oil Products (Cyprus) Limited, Set Petrochemicals Oy, Southeast Trading Oy, and Southport Management Services Limited.

Two of the persons added to the Entity List under Executive Order 13661 meet the criteria of Section 1, subparagraph B of the Order because they operate in Russia's arms or related materiel sector: Open Joint Stock Company Kontsern Izhmash and Izhevsky Mekhanichesky Zavod JSC. Open Joint Stock Company Kontsern Izhmash and Izhevsky Mekhanichesky Zavod JSC are linked to an entity previously designated by OFAC, Kalashnikov Concern, which was added to the Entity List on July 22, 2014 (79 FR 42455).

C. Entity Additions Consistent With Executive Order 13662

Fifteen entities are added based on activities that are described in Executive Order 13662 (79 FR 16169), *Blocking Property of Additional Persons Contributing to the Situation in Ukraine,* issued by the President on March 20, 2014. This Order expanded the scope of the national emergency declared in Executive Order 13660 of March 6, 2014 and Executive Order 13661 of March 16, 2014. Specifically, Executive Order 13662 expanded the scope to include sectors of the Russian economy as may be determined by the Secretary of the Treasury, in consultation with the Secretary of State, such as financial services, energy, metals and mining, engineering, and defense and related materiel. Under Section 8 of the Order, all agencies of the United States Government are directed to take all appropriate measures within their authority to carry out the provisions of the Order.

The Department of the Treasury's Office of Foreign Assets Control, pursuant to Executive Order 13662, on behalf of the Secretary of the Treasury, and in consultation with the Secretary of State, has designated the following fifteen persons as operating in the energy sector of Russia and owned or controlled by, or have acted or purported to act for or on behalf of, directly or indirectly, a person whose property and interests are blocked pursuant to the Order, Rosneft: CJSC Vankorneft, Neft-Aktiv LLC, OJSC Achinsk Refinery, OJSC Angarsk Petrochemical Company, OJSC Kuybyshev Refinery, OJSC Novokuybyshev Refinery, OJSC Orenburgneft, OJSC RN Holding, OJSC Samotlorneftegaz, OJSC Syzran Refinery, PJSC Verkhnechonskneftegaz, Rosneft Trade Limited, Rosneft Trading S.A., RN-Komsomolsky Refinery LLC, and RN-Yuganskneftegaz LLC. In conjunction with that designation, the Department of Commerce adds to the Entity List under this rule all fifteen listed above, all of which are subsidiaries of Rosneft (Rosneft was added to the Entity List on September 17, 2014 (79 FR 55612)).

D. Entity Additions Consistent With Executive Order 13685

Six entities are added based on activities that are described in Executive Order 13685 (79 FR 77357), *Blocking Property of Certain Persons and Prohibiting Certain Transactions with Respect to the Crimea Region of Ukraine,* issued by the President on December 19, 2014. This Order took additional steps to address the Russian occupation of the Crimea region of Ukraine with respect to the national emergency declared in Executive Order 13660 of March 6, 2014, and expanded in Executive Order 13661 of March 16, 2014 and Executive Order 13662 of March 20, 2014. In particular, Executive Order 13685 prohibited the export, reexport, sale or supply, directly or indirectly, from the United States or by a U.S. person, wherever located, of any goods, services, or technology to the Crimea region of Ukraine. Under Section 10 of the Order, all agencies of the United States Government are directed to take all appropriate measures within their authority to carry out the provisions of the Order.

The Department of the Treasury's Office of Foreign Assets Control, pursuant to Executive Order 13685 on behalf of the Secretary of the Treasury and in consultation with the Secretary of State, has designated the following six persons as operating in the Crimea region of Ukraine: State Enterprise Evpatoria Sea Commercial Port, State Enterprise Feodosia Sea Trading Port, State Shipping Company Kerch Sea Ferry, State Enterprise Kerch Sea Commercial Port, State Enterprise Sevastopol Sea Trading Port, and State Enterprise Yalta Sea Trading Port. In conjunction with that designation, the Department of Commerce adds all six of those entities to the Entity List under this rule and imposes a license requirement for exports, reexports, or transfers (in-country) to these blocked persons. This license requirement implements an appropriate measure within the authority of the EAR to carry out the provisions of Executive Order 13685.

For the fourteen persons under eighteen entries added to the Entity List based on activities that are described in Executive Orders 13660, 13661, or 13685, BIS imposes a license requirement for all items subject to the EAR and a license review policy of presumption of denial. The license requirements apply to any transaction in which items are to be exported, reexported, or transferred (in-country) to any of the persons or in which such persons act as purchaser, intermediate consignee, ultimate consignee, or end-user. In addition, no license exceptions are available for exports, reexports, or transfers (in-country) to the persons being added to the Entity List in this rule.

For the fifteen Russian subsidiaries of Rosneft and energy sector entities added to the Entity List based on activities described in Executive Order 13662, the Entity List imposes a license

requirement for the export, reexport or transfers (in-country) of all items subject to the EAR to those companies when the exporter, reexporter or transferor knows that the item will be used directly or indirectly in exploration for, or production of, oil or gas in Russian deepwater (greater than 500 feet) or Arctic offshore locations or shale formations in Russia, or is unable to determine whether the item will be used in such projects. License applications for such transactions will be reviewed with a presumption of denial when for use directly or indirectly for exploration or production from deepwater (greater than 500 feet), Arctic offshore, or shale projects in Russia that have the potential to produce oil. This license requirement implements an appropriate measure within the authority of BIS to carry out the provisions of Executive Order 13662.

This final rule adds the following twenty-nine persons under thirty-three entries to the Entity List:

Crimea Region of Ukraine

(1) *State Enterprise Evpatoria Sea Commercial Port,* a.k.a., the following eight aliases:

—Port of Evpatoria;
—Port of Yevpatoria;
—Seaport of Yevpatoriya;
—Yevpatoria Commercial Seaport;
—Yevpatoria Merchant Sea Port;
—Yevpatoria Sea Port;
—Yevpatoriya Commercial Sea Port; *and*
—Yevpatoriya Sea Port.

Mariners Square 1, Evpatoria, Crimea 97416, Ukraine; *and* 1, Moryakov Sq, Yevpatoriya, Crimea 97408, Ukraine; *and* 1 Moryakov Sq., Yevpatoria, Crimea 97416, Ukraine; *and* 1 Moryakov Sq, Yevpatoriya, Crimea 97416, Ukraine;

(2) *State Enterprise Feodosia Sea Trading Port,* a.k.a., the following five aliases:

—Port of Feodosia;
—Seaport of Feodosiya;
—Theodosia Commercial Seaport;
—Theodosia Merchant Sea Port; *and*
—Theodosia Sea Port.

14 Gorky Street, Theodosia 98100, Ukraine,; *and* 14, Gorky Str., Feodosiya, Crimea 98100, Ukraine; *and* Gorky Street 11, Feodosia, Crimea 98100, Ukraine;

(3) *State Enterprise Kerch Sea Commercial Port,* a.k.a., the following six aliases:

—Kerch Commercial Seaport;
—Kerch Merchant Sea Port;
—Kerch Sea Port;
—Port of Kerch;
—Seaport of Kerch; *and*
—State Enterprise Kerch Commercial Sea Port.

Kirova Street 28, Kerch, Crimea 98312, Ukraine; *and* 28 Kirova Str., Kerch, Crimea 98312, Ukraine; *and* 28, Kirov Str., Kerch, Crimea 98312, Ukraine; *and* Ul. Kirov, 28, Kerch, Crimea 98312, Ukraine; *and* ul Kirova 28, Kerch 98312, Ukraine;

(4) *State Enterprise Sevastopol Sea Trading Port,* a.k.a., the following seven aliases:

—Port of Sevastopol;
—Seaport of Sevastopol;
—Sevastopol Commercial Seaport;
—Sevastopol Merchant Sea Port;
—Sevastopol Sea Port;
—Sevastopol Sea Trade Port; *and*
—State Enterprise Sevastopol Commercial Seaport.

3 Place Nakhimova, Sevastopol 99011, Ukraine; *and* 5, Nakhimova square, Sevastopol, Crimea 99011, Ukraine; *and* Nahimova Square 5, Sevastopol, Crimea 99011, Ukraine;

(5) *State Enterprise Yalta Sea Trading Port,* a.k.a., the following five aliases:

—Port of Yalta;
—Seaport of Yalta;
—Yalta Commercial Seaport;
—Yalta Merchant Sea Port; *and*
—Yalta Sea Port.

Roosevelt Street 3, Yalta, Crimea 98600, Ukraine; *and* 5, Roosevelt Str., Yalta, Crimea 98600, Ukraine; *and* 5 Roosevelt Street, Yalta, Crimea 98600, Ukraine; *and*

(6) *State Shipping Company Kerch Sea Ferry,* a.k.a., the following one alias:

—State Ferry Enterprise Kerch Ferry.

Tselimbernaya Street 16, Kerch, Crimea, 98307, Ukraine; *and* 16 Tselibernaya Street, Kerch, Crimea 98307, Ukraine.

Cyprus

(1) *IPP Oil Products (Cyprus) Limited,* 12 Esperidon Street, 4th Floor, Nicosia 1087, Cyprus;

(2) *Rosneft Trade Limited,* f.k.a., TNK Trade Limited. Elenion Building 5 Themistokli Dervi, 2nd floor, Lefkosia, Nicosia 1066, Cyprus; *and*

(3) *Southport Management Services Limited,* Nicosia, Cyprus (See also address under United Kingdom).

Finland

(1) *Airfix Aviation Oy,* Tullimiehentie 4–6, Vantaa 01530, Finland (See also address under Switzerland);

(2) *Set Petrochemicals Oy,* Ukonvaaja 2 A, Espoo 02130, Finland; *and*

(3) *Southeast Trading Oy,* a.k.a., the following one alias:

—Southeast Trading LTD.

Espoo, Finland; *and* Kannelkatu 8, Lappeenranta 53100, Finland; *and* PL 148, Lappeenranta 53101, Finland (See also addresses under Romania and Russia).

Romania

(1) *Southeast Trading Oy,* a.k.a., the following one alias:

—Southeast Trading LTD.

Bucharest, Romania (See also addresses under Finland and Russia).

Russia

(1) *CJSC VANKORNEFT,* a.k.a., the following two aliases:

—Vankorneft; *and*
—ZAO Vankorneft.

Dobrovolcheskoy Brigady St., 15, Krasnoyarsk Territory 660077, Russia;

(2) *Izhevsky Mekhanichesky Zavod JSC,* a.k.a., the following one alias:

—Baikal.

8 Promyshlennaya Str., Izhevsk 426063, Russia;

(3) *Neft-Aktiv LLC,* a.k.a., the following two aliases:

—OOO Neft-Aktiv; *and*
—RN-Aktiv OOO.

Ulica Kaluzhskaya M., d., 15, str. 28, Moscow 119071, Russia;

(4) *OJSC Achinsk Refinery,* a.k.a., the following two aliases:

—Achinsk Refinery; *and*
—OAO Achinsk Oil Refinery VNK.

Achinsk Refinery industrial area, Bolsheuluisky district, Krasnoyarsk territory 662110, Russia;

(5) *OJSC Angarsk Petrochemical Company,* a.k.a., the following one alias:

—Angarsk Refinery.

Angarsk, Irkutsk region 665830, Russia; *and* 6 ul. K. Marksa, Angarsk 665830, Russia;

(6) *OJSC Kuybyshev Refinery,* a.k.a., the following two aliases:

—Kuibyshev Refinery; *and*
—OJSC Kuibyshev Refinery.

25 Groznenskaya st., Samara 443004, Russia;

(7) *OJSC Novokuybyshev Refinery,* a.k.a., the following one alias:

—Novokuibyshevsk Refinery.

Novokuibyshevsk, Samara region 446207, Russia;

(8) *OJSC Orenburgneft,* a.k.a., the following two aliases:

—OAO JSC Orenburgneft; *and*
—Orenburgneft.

Magistralnaya St., 2, Buzuluk, the Orenburg Region 461040, Russia; *and* st. Magistralynaya 2, Buzuluk 461040, Russia;

(9) *OJSC RN Holding,* a.k.a., the following one alias:

—RN Holding OAO.

60 Oktyabrskaya ul., Uvat 626170, Russia;

(10) *OJSC Samotlorneftegaz,* a.k.a., the following two aliases:

—Samotlorneftegaz; *and*
—Samotlorneftegaz JSC.

Lenina St. 4, the Tyumen Region, Khanty-Mansiysk, Autonomous District, Nizhnevartovsk 628606, Russia;

(11) *OJSC Syzran Refinery,* a.k.a., the following two aliases:

—Open Joint-Stock Oil and Gas Company Syzran; *and*
—Syzran Refinery.

1 Astrakhanskaya st., Syzran, Samara region 446009, Russia; *and* Moskvorechje street 105, Building 8, Moscow 115523, Russia;

(12) *Open Joint Stock Company Kontsern Izhmash,* a.k.a., the following one alias:

—OJSC Kontsern Izhmash.

3 Deryabin Proezd, Izhevsk, Udmurt Republic 426006, Russia;

(13) *PJSC Verkhnechonskneftegaz,* a.k.a., the following two aliases:

—OJSC Verkhnechonskneftegaz; *and*
—Verkhnechonskneftegaz.

Baikalskaya St., 295 B, Irkutsk 664050, Russia;

(14) *RN-Komsomolsky Refinery LLC,* a.k.a., the following three aliases:

—Komsomolsk Refinery;
—LLC RN-Komsomolsk Refinery; *and*
—RN-Komsomolski NPZ OOO.

115 Leningradskaya st., Komsomolsk-on-Amur, Khabarovsk region 681007, Russia;

(15) *RN-Yuganskneftegaz LLC,* a.k.a., the following two aliases:

—RN-Yuganskneftegaz OOO; *and*
—Yuganskneftegaz.

Lenina St., 26, Nefteyugansk, Tyumen Region, 628309, Russia; *and*

(16) *Southeast Trading Oy,* a.k.a., the following one alias:

—Southeast Trading LTD.

St. Petersburg, Russia (See also addresses under Finland and Romania).

Switzerland

(1) *Airfix Aviation Oy,* Chemin des Papillons 4, Geneva/Cointrin 1216, Switzerland (See also address under Finland); *and*

(2) *Rosneft Trading S.A.,* 2, Rue Place du Lac, 1204, Geneva, Switzerland.

Ukraine

(1) *Private Joint-Stock Company Mako Holding,* a.k.a., the following one alias:

—Mako Holding.

Bohdan Khmelnytsky Avenue, Building 102, Voroshilovsky District, Donetsk, Donetsk Oblast 83015, Ukraine.

United Kingdom

(1) *Southport Management Services Limited,* De Castro Street 24, Akara Building, Wickhams Cay 1, Road Town, Tortola, Virgin Islands, British (See also address under Cyprus).

Clarification to the Entity List for the Crimea Region of Ukraine

In addition to the changes described above, this final rule revises the reference to ''Crimea (occupied)'' on the Entity List to conform to how other references in the EAR refer to Crimea, such as section § 746.6 (Crimea region of Ukraine), footnote 8 to the Commerce Country Chart in Supplement No. 1 to Part 738, and footnote 3 to the Country Groups in Supplement No. 1 to Part 740 of the EAR, which all refer to Crimea as the ''Crimea region of Ukraine.'' Therefore, to conform to those other EAR provisions, this final rule revises the Entity List to change all references of ''Crimea (occupied)'' to ''Crimea region of Ukraine.''

Export Administration Act

Although the Export Administration Act expired on August 20, 2001, the President, through Executive Order 13222 of August 17, 2001, 3 CFR, 2001 Comp., p. 783 (2002), as amended by Executive Order 13637 of March 8, 2013, 78 FR 16129 (March 13, 2013) and as extended by the Notice of August 7, 2015, 80 FR 48233 (August 11, 2015), has continued the Export Administration Regulations in effect under the International Emergency Economic Powers Act. BIS continues to carry out the provisions of the Export Administration Act, as appropriate and to the extent permitted by law, pursuant to Executive Order 13222, as amended by Executive Order 13637.

Rulemaking Requirements

1. Executive Orders 13563 and 12866 direct agencies to assess all costs and benefits of available regulatory alternatives and, if regulation is necessary, to select regulatory approaches that maximize net benefits (including potential economic, environmental, public health and safety effects, distributive impacts, and equity). Executive Order 13563 emphasizes the importance of quantifying both costs and benefits, of reducing costs, of harmonizing rules, and of promoting flexibility. This rule has been determined to be not significant for purposes of Executive Order 12866.

2. Notwithstanding any other provision of law, no person is required to respond to nor be subject to a penalty for failure to comply with a collection of information, subject to the requirements of the Paperwork Reduction Act of 1995 (44 U.S.C. 3501 *et seq.*) (PRA), unless that collection of information displays a currently valid Office of Management and Budget (OMB) Control Number. This regulation involves collections previously approved by OMB under control number 0694–0088, Simplified Network Application Processing System, which includes, among other things, license applications and carries a burden estimate of 43.8 minutes for a manual or electronic submission. Total burden hours associated with the PRA and OMB control number 0694–0088 are not expected to increase as a result of this rule. You may send comments regarding the collection of information associated with this rule, including suggestions for reducing the burden, to Jasmeet K. Seehra, Office of Management and Budget (OMB), by email to *Jasmeet_K._Seehra@omb.eop.gov,* or by fax to (202) 395–7285.

3. This rule does not contain policies with Federalism implications as that term is defined in Executive Order 13132.

4. The provisions of the Administrative Procedure Act (5 U.S.C. 553) requiring notice of proposed rulemaking, the opportunity for public comment and a delay in effective date are inapplicable because this regulation involves a military or foreign affairs function of the United States. (*See* 5 U.S.C. 553(a)(1)). BIS implements this rule to protect U.S. national security or foreign policy interests by preventing items from being exported, reexported, or transferred (in country) to the persons being added to the Entity List. If this rule were delayed to allow for notice and comment and a delay in effective date, then the entities being added to the Entity List by this action would continue to be able to receive items without a license and to conduct activities contrary to the national security or foreign policy interests of the United States. In addition, publishing a proposed rule would give these parties notice of the U.S. Government's intention to place them on the Entity List and would create an incentive for these persons to either accelerate receiving items subject to the EAR to conduct activities that are contrary to the national security or foreign policy interests of the United States, and/or to take steps to set up additional aliases, change addresses, and other measures to try to limit the impact of the listing on the Entity List once a final rule was published. Further, no other law requires that a notice of proposed rulemaking and an opportunity for public comment be given for this rule. Because a notice of proposed rulemaking and an opportunity for

public comment are not required to be given for this rule by 5 U.S.C. 553, or by any other law, the analytical requirements of the Regulatory Flexibility Act, 5 U.S.C. 601 *et seq.,* are not applicable. Accordingly, no regulatory flexibility analysis is required and none has been prepared.

5. The Department finds for the change described under the heading *Clarification to the Entity List for the Crimea region of Ukraine* that there is good cause under 5 U.S.C. 553(b)(B) to waive the provisions of the Administrative Procedure Act requiring prior notice and the opportunity for public comment because they are unnecessary. This change included in this final rule is limited to making a conforming change to how the Crimea region of Ukraine is referred to in the EAR. This revision is non-substantive; therefore, providing an additional opportunity for public comment on this correction is unnecessary.

In addition, BIS finds good cause to waive the 30-day delay in effectiveness under 5 U.S.C. 553(d)(3) because it will allow the clarification to go into effect immediately, which will reduce the potential for confusion among the public and make sure all members of the public are aware of how BIS interprets these Crimea region of Ukraine provisions as they relate to other EAR provisions.

List of Subjects in 15 CFR Part 744

Exports, Reporting and recordkeeping requirements, Terrorism.

Accordingly, part 744 of the Export Administration Regulations (15 CFR parts 730–774) is amended as follows:

PART 744—[AMENDED]

■ 1. The authority citation for 15 CFR part 744 is revised to read as follows:

Authority: 50 U.S.C. app. 2401 *et seq.;* 50 U.S.C. 1701 *et seq.;* 22 U.S.C. 3201 *et seq.;* 42 U.S.C. 2139a; 22 U.S.C. 7201 *et seq.;* 22 U.S.C. 7210; E.O. 12058, 43 FR 20947, 3 CFR, 1978 Comp., p. 179; E.O. 12851, 58 FR 33181, 3 CFR, 1993 Comp., p. 608; E.O. 12938, 59 FR 59099, 3 CFR, 1994 Comp., p. 950; E.O. 12947, 60 FR 5079, 3 CFR, 1995 Comp., p. 356; E.O. 13026, 61 FR 58767, 3 CFR, 1996 Comp., p. 228; E.O. 13099, 63 FR 45167, 3 CFR, 1998 Comp., p. 208; E.O. 13222, 66 FR 44025, 3 CFR, 2001 Comp., p. 783; E.O. 13224, 66 FR 49079, 3 CFR, 2001 Comp., p. 786; Notice of September 17, 2014, 79 FR 56475 (September 19, 2014); Notice of November 7, 2014, 79 FR 67035 (November 12, 2014); Notice of January 21, 2015, 80 FR 3461 (January 22, 2015); Notice of August 7, 2015, 80 FR 48233 (August 11, 2015).

■ 2. Supplement No. 4 to part 744 is amended:

■ a. By removing ''Crimea (occupied)'' and adding in its place the destination of ''Crimea region of Ukraine'' under the Country Column;

■ b. By adding under the newly added Crimea region of Ukraine, in alphabetical order, six entities;

■ c. By adding under Cyprus, in alphabetical order, three Cypriot entities;

■ d. By adding under Finland, in alphabetical order, three Finnish entities;

■ e. By adding in alphabetical order the destination of Romania under the Country Column, and one Romanian entity;

■ f. By adding under Russia, in alphabetical order, sixteen Russian entities;

■ g. By adding in alphabetical order the destination of Switzerland under the Country Column, and two Swiss entities;

■ h. By adding under Ukraine, in alphabetical order, one Ukrainian entity; and

■ i. By adding under the United Kingdom, in alphabetical order, one British entity.

The additions read as follows:

Supplement No. 4 to Part 744—Entity List

Country	Entity	License requirement	License review policy	**Federal Register** citation
*	*	*	*	*
CRIMEA REGION OF UKRAINE.	*	*	*	*
	State Enterprise Evpatoria Sea Commercial Port, a.k.a., the following eight aliases: —Port of Evpatoria; —Port of Yevpatoria; —Seaport of Yevpatoriya; —Yevpatoria Commercial Seaport; —Yevpatoria Merchant Sea Port; —Yevpatoria Sea Port; —Yevpatoriya Commercial Sea Port; *and* —Yevpatoriya Sea Port Mariners Square 1, Evpatoria, Crimea 97416, Ukraine; *and* 1, Moryakov Sq, Yevpatoriya, Crimea 97408, Ukraine; *and* 1 Moryakov Sq., Yevpatoria, Crimea 97416, Ukraine; *and* 1 Moryakov Sq, Yevpatoriya, Crimea 97416, Ukraine.	For all items subject to the EAR. (See § 744.11 of the EAR)	Presumption of denial	80 FR [INSERT FR PAGE NUMBER 9/2/2015].
	*	*	*	*
	State Enterprise Feodosia Sea Trading Port, a.k.a., the following five aliases: —Port of Feodosia; —Seaport of Feodosiya; —Theodosia Commercial Seaport; —Theodosia Merchant Sea Port; *and* —Theodosia Sea Port	For all items subject to the EAR. (See § 744.11 of the EAR)	Presumption of denial	80 FR [INSERT FR PAGE NUMBER 9/2/2015].

Country	Entity	License requirement	License review policy	Federal Register citation
	14 Gorky Street, Theodosia 98100, Ukraine,; *and* 14, Gorky Str., Feodosiya, Crimea 98100, Ukraine; *and* Gorky Street 11, Feodosia, Crimea 98100, Ukraine.			
	State Enterprise Kerch Sea Commercial Port, a.k.a., the following six aliases: —Kerch Commercial Seaport; —Kerch Merchant Sea Port; —Kerch Sea Port; —Port of Kerch; —Seaport of Kerch; *and* —State Enterprise Kerch Commercial Sea Port Kirova Street 28, Kerch, Crimea 98312, Ukraine; *and* 28 Kirova Str., Kerch, Crimea 98312, Ukraine; *and* 28, Kirov Str., Kerch, Crimea 98312, Ukraine; *and* Ul. Kirov, 28, Kerch, Crimea 98312, Ukraine; *and* ul Kirova 28, Kerch 98312, Ukraine;	For all items subject to the EAR. (See § 744.11 of the EAR)	Presumption of denial	80 FR [INSERT FR PAGE NUMBER 9/2/2015].
	State Enterprise Sevastopol Sea Trading Port, a.k.a., the following seven aliases: —Port of Sevastopol; —Seaport of Sevastopol; —Sevastopol Commercial Seaport; —Sevastopol Merchant Sea Port; —Sevastopol Sea Port; —Sevastopol Sea Trade Port; *and* —State Enterprise Sevastopol Commercial Seaport 3 Place Nakhimova, Sevastopol 99011, Ukraine; *and* 5, Nakhimova square, Sevastopol, Crimea 99011, Ukraine; *and* Nahimova Square 5, Sevastopol, Crimea 99011, Ukraine.	For all items subject to the EAR. (See § 744.11 of the EAR)	Presumption of denial	80 FR [INSERT FR PAGE NUMBER 9/2/2015].
	State Enterprise Yalta Sea Trading Port, a.k.a., the following five aliases: —Port of Yalta; —Seaport of Yalta —Yalta Commercial Seaport; —Yalta Merchant Sea Port; *and* —Yalta Sea Port Roosevelt Street 3, Yalta, Crimea 98600, Ukraine; *and* 5, Roosevelt Str., Yalta, Crimea 98600, Ukraine; *and* 5 Roosevelt Street, Yalta, Crimea 98600, Ukraine.	For all items subject to the EAR. (See § 744.11 of the EAR)	Presumption of denial	80 FR [INSERT FR PAGE NUMBER 9/2/2015].
	State Shipping Company Kerch Sea Ferry, a.k.a., the following one alias: —State Ferry Enterprise Kerch Ferry. Tselimbernaya Street 16, Kerch, Crimea, 98307, Ukraine; *and* 16 Tselibernaya Street, Kerch, Crimea 98307, Ukraine	For all items subject to the EAR. (See § 744.11 of the EAR)	Presumption of denial	80 FR [INSERT FR PAGE NUMBER 9/2/2015].
CYPRUS	* *	*	* *	*
	IPP Oil Products (Cyprus) Limited, 12 Esperidon Street, 4th Floor, Nicosia 1087, Cyprus	For all items subject to the EAR. (See § 744.11 of the EAR)	Presumption of denial	80 FR [INSERT FR PAGE NUMBER 9/2/2015].
	* *	*	* *	*
	Rosneft Trade Limited, f.k.a., TNK Trade Limited. Elenion Building 5 Themistokli Dervi, 2nd floor, Lefkosia, Nicosia 1066, Cyprus	For all items subject to the EAR when used in projects specified in § 746.5 of the EAR	See § 746.5(b) of the EAR	80 FR [INSERT FR PAGE NUMBER 9/2/2015].
	Southport Management Services Limited, Nicosia, Cyprus (See also address under United Kingdom)	For all items subject to the EAR. (See § 744.11 of the EAR)	Presumption of denial	80 FR [INSERT FR PAGE NUMBER 9/2/2015].
	* *	*	* *	*

Country	Entity	License requirement	License review policy	**Federal Register** citation
*	* *	*	* *	*
FINLAND	Airfix Aviation Oy, Tullimiehentie 4–6, Vantaa 01530, Finland (See also address under Switzerland)	For all items subject to the EAR. (See § 744.11 of the EAR)	Presumption of denial	80 FR [INSERT FR PAGE NUMBER 9/2/2015].
	* *	*	* *	*
	Set Petrochemicals Oy, Ukonvaaja 2 A, Espoo 02130, Finland	For all items subject to the EAR. (See § 744.11 of the EAR)	Presumption of denial	80 FR [INSERT FR PAGE NUMBER 9/2/2015].
	Southeast Trading Oy, a.k.a., the following one alias: —Southeast Trading LTD. Espoo, Finland; *and* Kannelkatu 8, Lappeenranta 53100, Finland; *and* PL 148, Lappeenranta 53101, Finland (See also addresses under Romania and Russia)	For all items subject to the EAR. (See § 744.11 of the EAR)	Presumption of denial	80 FR [INSERT FR PAGE NUMBER 9/2/2015].
*	* *	*	* *	*
ROMANIA	Southeast Trading Oy, a.k.a., the following one alias: —Southeast Trading LTD. Bucharest, Romania (See also addresses under Finland and Russia)	For all items subject to the EAR. (See § 744.11 of the EAR)	Presumption of denial	80 FR [INSERT FR PAGE NUMBER 9/2/2015].
RUSSIA.				
	* *	* *	*	*
	CJSC VANKORNEFT, a.k.a., the following two aliases: —Vankorneft; *and* —ZAO Vankorneft. Dobrovolcheskoy Brigady St., 15, Krasnoyarsk Territory 660077, Russia.	For all items subject to the EAR when used in projects specified in § 746.5 of the EAR	See § 746.5(b) of the EAR	80 FR [INSERT FR PAGE NUMBER 9/2/2015].
	* *	* *	*	*
	Izhevsky Mekhanichesky Zavod JSC, a.k.a., the following one alias: —Baikal. 8 Promyshlennaya Str., Izhevsk 426063, Russia	For all items subject to the EAR. (See § 744.11 of the EAR)	Presumption of denial	80 FR [INSERT FR PAGE NUMBER 9/2/2015].
	* *	* *	*	*
	Neft-Aktiv LLC, a.k.a., the following two aliases: —OOO Neft —Aktiv; *and* —RN-Aktiv OOO. Ulica Kaluzhskaya M., d., 15, str. 28, Moscow 119071, Russia	For all items subject to the EAR when used in projects specified in § 746.5 of the EAR	See § 746.5(b) of the EAR	80 FR [INSERT FR PAGE NUMBER 9/2/2015].
	* *	* *	*	*
	OJSC Achinsk Refinery, a.k.a., the following two aliases: —Achinsk Refinery; *and* —OAO Achinsk Oil Refinery VNK. Achinsk Refinery industrial area, Bolsheuluisky district, Krasnoyarsk territory 662110, Russia	For all items subject to the EAR when used in projects specified in § 746.5 of the EAR	See § 746.5(b) of the EAR	80 FR [INSERT FR PAGE NUMBER 9/2/2015].

Country	Entity	License requirement	License review policy	Federal Register citation
	OJSC Angarsk Petrochemical Company, a.k.a., the following one alias: —Angarsk Refinery. Angarsk, Irkutsk region 665830, Russia; *and* 6 ul. K. Marksa, Angarsk 665830, Russia	For all items subject to the EAR when used in projects specified in § 746.5 of the EAR	See § 746.5(b) of the EAR	80 FR [INSERT FR PAGE NUMBER 9/2/2015].
	OJSC Kuybyshev Refinery, a.k.a., the following two aliases: —Kuibyshev Refinery; *and* —OJSC Kuibyshev Refinery. 25 Groznenskaya st., Samara 443004, Russia	For all items subject to the EAR when used in projects specified in § 746.5 of the EAR	See § 746.5(b) of the EAR	80 FR [INSERT FR PAGE NUMBER 9/2/2015].
	OJSC Novokuybyshev Refinery, a.k.a., the following one alias: —Novokuibyshevsk Refinery. Novokuibyshevsk, Samara region 446207, Russia	For all items subject to the EAR when used in projects specified in § 746.5 of the EAR	See § 746.5(b) of the EAR	80 FR [INSERT FR PAGE NUMBER 9/2/2015].
	OJSC Orenburgneft, a.k.a., the following two aliases: —OAO JSC Orenburgneft; *and* —Orenburgneft. Magistralnaya St., 2, Buzuluk, the Orenburg Region 461040, Russia; *and* st. Magistralynaya 2, Buzuluk 461040, Russia	For all items subject to the EAR when used in projects specified in § 746.5 of the EAR	See § 746.5(b) of the EAR	80 FR [INSERT FR PAGE NUMBER 9/2/2015].
	OJSC RN Holding, a.k.a., the following one alias: —RN Holding OAO. 60 Oktyabrskaya ul., Uvat 626170, Russia	For all items subject to the EAR when used in projects specified in § 746.5 of the EAR	See § 746.5(b) of the EAR	80 FR [INSERT FR PAGE NUMBER 9/2/2015].
	OJSC Samotlorneftegaz, a.k.a., the following two aliases: —Samotlorneftegaz; *and* —Samotlorneftegaz JSC. Lenina St. 4, the Tyumen Region, Khanty-Mansiysk, Autonomous District, Nizhnevartovsk 628606, Russia	For all items subject to the EAR when used in projects specified in § 746.5 of the EAR	See § 746.5(b) of the EAR	80 FR [INSERT FR PAGE NUMBER 9/2/2015].
	OJSC Syzran Refinery, a.k.a., the following two aliases: —Open Joint-Stock Oil and Gas Company Syzran; *and* —Syzran Refinery. 1 Astrakhanskaya st., Syzran, Samara region 446009, Russia; *and* Moskvorechje street 105, Building 8, Moscow 115523, Russia	For all items subject to the EAR when used in projects specified in § 746.5 of the EAR	See § 746.5(b) of the EAR	80 FR [INSERT FR PAGE NUMBER 9/2/2015].
	Open Joint Stock Company Kontsern Izhmash, a.k.a., the following one alias: —OJSC Kontsern Izhmash. 3 Deryabin Proezd, Izhevsk, Udmurt Republic 426006, Russia.	For all items subject to the EAR. (See § 744.11 of the EAR)	Presumption of denial	80 FR [INSERT FR PAGE NUMBER 9/2/2015].
*	*	*	*	*
	PJSC Verkhnechonskneftegaz, a.k.a., the following two aliases: —OJSC Verkhnechonskneftegaz; *and* —Verkhnechonskneftegaz. Baikalskaya St., 295 B, Irkutsk 664050, Russia;	For all items subject to the EAR when used in projects specified in § 746.5 of the EAR	See § 746.5(b) of the EAR	80 FR [INSERT FR PAGE NUMBER 9/2/2015.
*	*	*	*	*
	RN-Komsomolsky Refinery LLC, a.k.a., the following three aliases: —Komsomolsk Refinery; —LLC RN-Komsomolsk Refinery; *and*	For all items subject to the EAR when used in projects specified in § 746.5 of the EAR —RN-Komsomolski NPZ OOO. 115 Leningradskaya st., Komsomolsk-on-Amur, Khabarovsk region 681007, Russia	See § 746.5(b) of the EAR	80 FR [INSERT FR PAGE NUMBER 9/2/2015].

Country	Entity	License requirement	License review policy	**Federal Register** citation
	RN-Yuganskneftegaz LLC, a.k.a., the following two aliases: —RN- Yuganskneftegaz OOO; *and* —Yuganskneftegaz. Lenina St., 26, Nefteyugansk, Tyumen Region, 628309, Russia	For all items subject to the EAR when used in projects specified in § 746.5 of the EAR	See § 746.5(b) of the EAR	80 FR [INSERT FR PAGE NUMBER 9/2/2015].
	* *	* *	*	*
	Southeast Trading Oy, a.k.a., the following one alias: —Southeast Trading LTD. St. Petersburg, Russia (See also addresses under Finland and Romania)	For all items subject to the EAR. (See § 744.11 of the EAR)	Presumption of denial	80 FR [INSERT FR PAGE NUMBER 9/2/2015].
	* *	* *	*	*
SWITZERLAND	Airfix Aviation Oy, Chemin des Papillons 4, Geneva/Cointrin 1216 Switzerland (See also address under Finland)	For all items subject to the EAR. (See § 744.11 of the EAR)	Presumption of denial	80 FR [INSERT FR PAGE NUMBER 9/2/2015].
	Rosneft Trading S.A., 2, Rue Place du Lac, 1204, Geneva, Switzerland	For all items subject to the EAR when used in projects specified in § 746.5 of the EAR	See § 746.5(b) of the EAR	80 FR [INSERT FR PAGE NUMBER 9/2/2015].
UKRAINE	* *	* *	*	*
	Private Joint-Stock Company Mako Holding, a.k.a., the following one alias: —Mako Holding. Bohdan Khmelnytsky Avenue, Building 102, Voroshilovsky District, Donetsk, Donetsk Oblast 83015, Ukraine	For all items subject to the EAR. (See § 744.11 of the EAR)	Presumption of denial	80 FR [INSERT FR PAGE NUMBER 9/2/2015].
*	* *	*	* *	*
UNITED KINGDOM.	* *	* *	*	*
	Southport Management Services Limited, De Castro Street 24, Akara Building, Wickhams Cay 1, Road Town, Tortola, Virgin Islands, British (See also address under Cyprus).	For all items subject to the EAR. (See § 744.11 of the EAR)	Presumption of denial	80 FR [INSERT FR PAGE NUMBER 9/2/2015].
*	* *	*	* *	*

Dated: August 25, 2015.

Eric L. Hirschhorn,

Under Secretary of Commerce for Industry and Security.

[FR Doc. 2015–21682 Filed 9–1–15; 8:45 am]

BILLING CODE 3510–33–P

DEPARTMENT OF THE TREASURY

Internal Revenue Service

26 CFR Part 1

[TD 9735]

RIN 1545–BM89

Administration of Multiemployer Plan Participant Vote on an Approved Suspension of Benefits Under MPRA

AGENCY: Internal Revenue Service (IRS), Treasury.

ACTION: Temporary regulations.

SUMMARY: The Multiemployer Pension Reform Act of 2014 (MPRA) pertains to multiemployer plans that are projected to have insufficient funds, at some point in the future, to pay the full plan benefits to which individuals will be entitled (referred to as plans in ''critical and declining status''). The sponsor of such a plan is permitted to reduce the pension benefits payable to plan participants and beneficiaries if certain conditions are satisfied (referred to as a ''suspension of benefits''). A suspension of benefits is not permitted to take effect prior to a vote of the participants of the

plan with respect to the suspension. This document contains temporary regulations that provide guidance relating to the administration of that vote. These temporary regulations affect active, retired, and deferred vested participants and beneficiaries of multiemployer plans that are in critical and declining status as well as employers contributing to, and sponsors and administrators of, those plans. The text of these temporary regulations also serves as the text of the proposed regulations set forth in the notice of proposed rulemaking (REG–123640–15) on this subject in the Proposed Rules section of this issue of the **Federal Register**.

DATES: *Effective date:* These temporary regulations are effective on September 2, 2015.

Applicability date: These temporary regulations apply on and after June 17, 2015, and expire on June 15, 2018.

FOR FURTHER INFORMATION CONTACT: The Department of the Treasury MPRA guidance information line at (202) 622–1559 (not a toll-free number).

SUPPLEMENTARY INFORMATION:

Paperwork Reduction Act

These temporary regulations are being issued without prior notice and public procedure pursuant to the Administrative Procedure Act (5 U.S.C. 553). The collection of information contained in these regulations has been reviewed and approved by the Office of Management and Budget under control number 1545–2260.

An agency may not conduct or sponsor, and a person is not required to respond to, a collection of information unless the collection of information displays a valid control number.

For further information concerning this collection of information, and where to submit comments on the collection of information and the accuracy of the estimated burden, and suggestions for reducing this burden, please refer to the preamble to the cross-referenced notice of proposed rulemaking on this subject in the Proposed Rules section in this issue of the **Federal Register**.

Books or records relating to a collection of information must be retained as long as their contents may become material in the administration of any internal revenue law. Generally, tax returns and tax return information are confidential, as required by 26 U.S.C. 6103.

Background

Section 432(e)(9) of the Internal Revenue Code (Code), as amended by the Multiemployer Pension Reform Act of 2014 (MPRA), permits plan sponsors of certain multiemployer plans to reduce the plan benefits payable to participants and beneficiaries (referred to as a ''suspension of benefits'') if specified conditions are satisfied. One key condition is that any such plan must be projected to have insufficient funds, at some point in the future, to pay the full benefits to which individuals will be entitled under the plan (referred to as a plan in ''critical and declining status'').

Under section 432(e)(9)(H), no suspension of benefits may take effect prior to a vote of the participants of the plan with respect to the suspension. Section 432(e)(9)(H) requires that the vote be administered by the Secretary of the Treasury, in consultation with the Pension Benefit Guaranty Corporation and the Secretary of Labor (generally referred to in this preamble as the Treasury Department, PBGC, and Labor Department, respectively), within 30 days after approval of a suspension application. The plan sponsor is required to provide a ballot for a vote (subject to approval by the Treasury Department, in consultation with the PBGC and the Labor Department). The statute specifies information that the ballot must contain, including a statement in opposition to the proposed suspension that is compiled from comments received on the application.

On June 19, 2015, the Treasury Department and the Internal Revenue Service published temporary regulations (TD 9723) under section 432(e)(9) in the **Federal Register** (80 FR 35207) (June 2015 temporary regulations). The June 2015 temporary regulations provide general guidance regarding section 432(e)(9) and outline the requirements for a plan sponsor of a plan that is in critical and declining status to apply for a suspension of benefits and for the Treasury Department to begin processing such an application. A notice of proposed rulemaking cross-referencing the temporary regulations (REG–102648–15) was also published in the same issue of the **Federal Register** (80 FR 35262). Both the June 2015 temporary regulations and the related proposed regulations reflect consideration of comments received in response to the Request for Information on Suspensions of Benefits under the Multiemployer Pension Reform Act of 2014 published in the **Federal Register** on February 18, 2015 (80 FR 8578) (February 2015 request for information).

The June 2015 temporary regulations and the related proposed regulations set forth many of the rules relating to the participant vote under section 432(e)(9)(H). However, neither the June 2015 temporary regulations nor the related proposed regulations provide detailed guidance on how the Treasury Department would administer the vote.

Explanation of Provisions

Overview

These temporary regulations provide guidance relating to the administration of the participant vote required under section 432(e)(9)(H). These temporary regulations reflect consideration of comments received in response to the February 2015 request for information. The Treasury Department consulted with the PBGC and the Labor Department on these temporary regulations.

A participant vote requires the completion of three steps. First, a package of ballot materials is distributed to eligible voters. Second, the eligible voters cast their votes and the votes are collected and tabulated. Third, the Treasury Department (in consultation with the PBGC and the Labor Department) determines whether a majority of the eligible voters has voted to reject the proposed suspension. The June 2015 temporary regulations define eligible voters as all plan participants and all beneficiaries of deceased participants.

Under these temporary regulations, the Treasury Department is permitted to designate a service provider or service providers to facilitate the administration of the vote. The service provider may assist in the steps of distributing the ballot package to eligible voters and collecting and tabulating the votes. These temporary regulations provide that if a service provider is designated to collect and tabulate votes, then the service provider will provide the Treasury Department with the report of the results of the vote, which includes a breakdown of the number of eligible voters who voted, the number of eligible voters who voted in support of and to reject the suspension, and certain other information. The Treasury Department will use that information to determine (in consultation with the PBGC and the Labor Department) whether a majority of eligible voters has voted to reject the suspension.

Distribution of the Ballot Package

These temporary regulations provide that the ballot package sent to eligible voters includes the approved ballot and a unique identifier for each eligible voter. The unique identifier, which is assigned by the Treasury Department or a designated service provider, is intended to ensure the validity of the

vote while maintaining the eligible voters' privacy in the voting process.

These temporary regulations provide guidance on the plan sponsor's statutory requirement to provide a ballot. Because the ballot for each eligible voter is accompanied by a unique identifier, the plan sponsor cannot itself distribute the ballot. Instead, the plan sponsor is responsible for furnishing a list of eligible voters so that the ballot can be distributed on the plan sponsor's behalf. The list must include the last known mailing address for each eligible voter (except for those eligible voters for whom the last known mailing address is known to be incorrect). The plan sponsor must also provide a list of eligible voters whom the plan sponsor has been unable to locate using reasonable efforts. In addition, the plan sponsor must furnish current electronic mailing addresses for certain eligible voters, who are identified below. The plan sponsor must also furnish the individualized estimates provided to eligible voters as part of the earlier notices described in section 432(e)(9)(F) (or, if an individualized estimate is no longer accurate for an eligible voter, a corrected version of that estimate) so that an individualized estimate can be included with the ballot for each eligible voter. These materials must be provided no later than 7 days after the date the Treasury Department has approved an application for a suspension of benefits.

Under these temporary regulations, the plan sponsor is responsible for paying all costs associated with the ballot package, including postage. This is because the section 432(e)(9)(H)(iii) requirement that the plan sponsor provide a ballot means that the plan sponsor is responsible for the cost of providing the ballot package to eligible voters, including the costs associated with printing, assembling and mailing those ballot packages.

These temporary regulations provide that ballot packages will be distributed to eligible voters by first-class U.S. mail. A supplemental copy of the mailed ballot package may also be sent by an electronic communication to an eligible voter who has consented to receive electronic notifications. For example, if the ballot sent by first-class U.S. mail is not received, a supplemental ballot may be provided by electronic mail.

These temporary regulations provide additional detail on the plan sponsor's duty to communicate with eligible voters. As part of this communication requirement, these temporary regulations provide that the plan sponsor must notify certain eligible voters (using an electronic communication) that the ballot package is being mailed by first-class U.S. mail. The eligible voters who must be notified under this rule are those who received the notice of the proposed suspension under section 432(e)(9)(F) in electronic form and those who regularly receive plan-related electronic communications from the plan sponsor.[1] This notification must be sent promptly after the plan sponsor is informed of the ballot distribution date. This notification in electronic form ensures that those eligible voters who ordinarily expect to receive communications from the plan sponsor in electronic form are aware that a ballot package will arrive via first-class U.S. mail. Under these temporary regulations, this notification is sent by the plan sponsor, rather than a service provider, so that the communication comes from a familiar source, which would make it less likely that the communication is delivered to a ''spam'' or ''junk'' mail folder.

The plan sponsor will have previously made reasonable efforts to contact individuals whose mailed initial notices were returned as undeliverable, and the mailing addresses for the ballot packages that are furnished by the plan sponsor will reflect updates as a result of those reasonable efforts. These temporary regulations require the plan sponsor to make similar reasonable efforts to locate eligible voters after being notified that their ballots were returned as undeliverable.

Voting by Eligible Voters and Collection and Tabulation of Votes

In accordance with section 432(e)(9)(H)(ii), these temporary regulations require that the Treasury Department (in consultation with the PBGC and the Labor Department) administer the participant vote no later than 30 days following the date of approval of an application for a suspension of benefits. These temporary regulations interpret the term ''administer a vote'' to mean that the voting period must begin (but need not end) within the 30-day timeframe. As a result, these temporary regulations require that ballot packages be distributed no later than 30 days after the application has been approved and specify that the voting period begins on the ballot distribution date. Although the temporary regulations allow for distribution of ballot packages up to 30 days following approval of an application for suspension of benefits, it is generally expected that ballot packages will be distributed well before that deadline.

These temporary regulations specify that the voting period generally will remain open until the 30th day following the date the Treasury Department approves the application for a suspension of benefits. However, the voting period will not close earlier than 21 days after the ballot distribution date. In addition, the Treasury Department (in consultation with the PBGC and the Labor Department) is permitted to specify a later end to the voting period in appropriate circumstances. For example, an extension might be appropriate if, near the end of the original voting period, there are significant technical difficulties with respect to the collection of votes and those technical difficulties are not resolved in time to provide eligible voters with sufficient time to cast their votes.

These temporary regulations specify that votes must be collected and tabulated using an automated voting system under which each eligible voter must furnish a unique identifier in order to cast a vote. Such a system will be designed to record votes both electronically (through a Web site) and telephonically (through a toll-free number that will accommodate a touch-tone or interactive voice response). This will permit any voter who lacks internet access or, for any reason, is not comfortable voting via a Web site, to cast a vote using a toll-free number. It is expected that the system will provide reasonable support to facilitate eligible voters' use of the system's electronic and telephonic features. These temporary regulations clarify that votes are permitted to be cast using only these methods and that responses returned by any other means are invalid.

The temporary regulations do not provide for the collection of votes using paper ballots because casting votes using a Web site or a telephonic system will be convenient for participants and will save time and money while providing reliable results. Providing a third voting option by also permitting votes to be cast using paper ballots would require additional time, in order for ballots to be returned by mail and authenticated and counted by hand. Voting by marking and mailing back paper ballots would also entail significant additional costs to process (such as employing additional personnel for processing and providing return postage and envelopes). The temporary regulations therefore reflect the conclusion that the most efficient and fairest approach to implementing the statutory provisions on

[1] The plan sponsor is also permitted to send this notification to any other eligible voters for whom the plan sponsor has an electronic mailing address.

administration of the vote on an approved suspension of benefits is to provide eligible voters with sufficient time to carefully consider the information furnished to them before casting their votes while seeking to avoid unnecessary time and expense processing those votes once they have been cast. The automated methods of voting, collecting, and tabulating votes set forth in these temporary regulations also have been used by pension plans for other types of elections that involve voting by plan participants (including retirees).

Determination That a Majority of Eligible Voters Has Voted to Reject the Suspension

Within 7 days after the end of the voting period, these temporary regulations provide that the Treasury Department (in consultation with the PBGC and the Labor Department) will either certify that a majority of all eligible voters has voted to reject the suspension or, if a majority of eligible voters did not vote to reject the suspension, issue a final authorization to suspend. These temporary regulations permit the Treasury Department (in consultation with the PBGC and the Labor Department) to establish necessary policies and procedures to facilitate the vote. These policies and procedures may include, but are not limited to, establishing a process for an eligible voter to challenge the vote. It is expected that the Treasury Department will resolve any challenges before the conclusion of the 7-day period following the end of the voting period.

Items Related to the Contents of the Ballot

Under these temporary regulations, the statement in opposition to the proposed suspension that is compiled from comments received on the application will be prepared by the Labor Department. Under these temporary regulations, this statement in opposition must be written in a manner that is readily understandable to the average plan participant. It is intended that the statement in opposition will be written in a manner to ensure parity with the statement in support of the suspension. If there are no comments in opposition to the proposed suspension, then the statement in opposition will indicate that there were no such comments.

These temporary regulations provide that a model ballot may be published in the form of a revenue procedure, notice, or other guidance published in the Internal Revenue Bulletin.

Effective/Applicability Date

As with the previously published temporary regulations, these regulations apply on and after June 17, 2015, and expire on June 15, 2018.

Special Analyses

Certain IRS regulations, including this one, are exempt from the requirements of Executive Order 12866, as supplemented and reaffirmed by Executive Order 13563. Therefore, a regulatory impact assessment is not required. It also has been determined that section 553(b) of the Administrative Procedure Act (5 U.S.C. chapter 5) does not apply to these regulations. For the applicability of the Regulatory Flexibility Act (5 U.S.C. chapter 6) please refer to the Special Analyses section of the preamble to the cross-referenced notice of proposed rulemaking published in the Proposed Rules section in this issue of the **Federal Register**. Pursuant to section 7805(f) of the Code, these regulations have been submitted to the Chief Counsel for Advocacy of the Small Business Administration for comment on their impact on small business.

Contact Information

For general questions regarding these temporary regulations, please contact the Department of the Treasury MPRA guidance information line at (202) 622–1559 (not a toll-free number). For information regarding a specific application for a suspension of benefits, please contact the Department of the Treasury at (202) 622–1534 (not a toll-free number).

List of Subjects in 26 CFR Part 1

Income taxes, Reporting and recordkeeping requirements.

Amendments to the Regulations

Accordingly, 26 CFR part 1 is amended as follows:

PART 1—INCOME TAXES

■ **Paragraph 1.** The authority citation for part 1 continues to read in part as follows:

Authority: 26 U.S.C. 7805 * * *

■ **Par. 2.** Section 1.432(e)(9)-1T(h) is amended by revising paragraph (h)(2) and adding paragraphs (h)(3)(iv) and (v) and (h)(7) and (8) to read as follows:

§ 1.432(e)(9)–1T Benefit suspensions for multiemployer plans in critical and declining status (temporary).

* * * * *

(h) * * *

(2) *Participant vote*—(i) *In general.* The participant vote described in paragraph (h)(1)(i) of this section requires completion of the following steps—

(A) Distribution of the ballot package described in paragraph (h)(2)(iii) of this section to the eligible voters;

(B) Voting by eligible voters and collection and tabulation of the votes, as described in paragraph (h)(2)(iv) of this section; and

(C) Determination of whether a majority of the eligible voters has voted to reject the suspension, as described in paragraph (h)(2)(v) of this section.

(ii) *Designation of service provider for limited functions.* The Secretary of the Treasury is permitted to designate one or more service providers to perform, under the supervision of the Secretary, any of the functions described in paragraphs (h)(2)(i)(A) and (B) of this section. If the Secretary designates a service provider to perform these functions then the service provider will provide the Secretary with a written report of the results of the vote, including (as applicable)—

(A) The number of ballot packages distributed to eligible voters;

(B) The number of eligible voters to whom ballot packages have not been provided (because the individuals could not be located);

(C) The number of eligible voters who voted (specifying the number of affirmative votes and the number of negative votes cast); and

(D) Any other information that the Secretary requires.

(iii) *Distribution of the ballot package to the eligible voters*—(A) *Ballot package.* The ballot package distributed to each eligible voter shall consist of—

(*1*) A ballot, approved under paragraph (h)(3)(iii) of this section, which contains the items described in section 432(e)(9)(H)(iii) and paragraph (h)(3)(i) of this section; and

(*2*) A unique identifier assigned to the eligible voter for use in voting.

(B) *Plan sponsor responsibilities*—(*1*) *In general.* This paragraph (h)(2)(iii)(B) sets forth the responsibilities of the plan sponsor with respect to the distribution of the ballot package to the eligible voters.

(*2*) *Furnish information regarding eligible voters.* No later than 7 days following the date the Secretary of the Treasury has approved an application for a suspension of benefits under paragraph (g) of this section, the plan sponsor must furnish the following—

(*i*) A list of all eligible voters;

(*ii*) For each eligible voter, the last known mailing address (or, if the plan sponsor has been unable to locate that individual using the standards that apply for purposes of paragraph (f)(1)(i)

of this section, an indication that the individual could not be located through reasonable efforts);

(*iii*) Current electronic mailing addresses for those eligible voters identified in paragraph (h)(2)(iii)(B)(*4*) of this section; and

(*iv*) The individualized estimates provided to eligible voters as part of the earlier notices described in section 432(e)(9)(F) (or, if an individualized estimate is no longer accurate for an eligible voter, a corrected version of that estimate).

(*3*) *Communicate with eligible voters.* In accordance with section 432(e)(9)(H)(iv) and paragraph (h)(1)(ii) of this section, the plan sponsor is responsible for communicating with eligible voters, which includes—

(*i*) Notifying the eligible voters described in paragraph (h)(2)(iii)(B)(*4*) of this section that a ballot package is being distributed by first-class U.S. mail; and

(*ii*) Making reasonable efforts (using the standards that apply for purposes of paragraph (f)(1)(i) of this section) as necessary to locate eligible voters for whom the plan sponsor has received notification that the mailed ballot packages are returned as undeliverable so that ballot packages can be sent to those eligible voters.

(*4*) *Eligible voters to receive electronic notification.* Those eligible voters whom the plan sponsor must notify electronically are—

(*i*) Eligible voters who previously received the notice described in paragraph (f) of this section in electronic form (as permitted under paragraph (f)(3)(ii) of this section), and

(*ii*) Any other eligible voters who regularly receive plan-related communications from the plan sponsor in electronic form.

(*5*) *Method of notifying certain eligible voters.* The notification described in paragraph (h)(2)(iii)(B)(*3*)(*i*) of this section for an eligible voter must be made using the electronic form normally used to send plan-related communications to that voter (or the form used to provide the notice in paragraph (f) of this section, if different). The plan sponsor must send this notification promptly after being informed of the ballot distribution date (within the meaning of paragraph (h)(2)(iii)(D) of this section) and the notification must include the ballot distribution date.

(*6*) *Pay costs associated with distribution.* The plan sponsor is responsible for paying all costs associated with printing, assembling, and distributing the ballot package, including postage.

(C) *Required method of distributing ballot package.* Ballot packages must be distributed to eligible voters by first-class U.S. mail. A supplemental copy of the mailed ballot package may also be sent by an electronic communication to an eligible voter who has consented to receive electronic communications.

(D) *Timing.* Ballot packages will be distributed to eligible voters no later than 30 days after the Secretary of the Treasury has approved an application for a suspension of benefits under paragraph (g) of this section. The date on which the ballot packages are mailed to the eligible voters is referred to as the ballot distribution date.

(iv) *Collection and tabulation of votes cast by eligible voters*—(A) *Voting period.* The voting period begins on the ballot distribution date. The voting period generally remains open until the 30th day following the date the Secretary of the Treasury has approved an application for a suspension of benefits under paragraph (g) of this section. However, the voting period will not close earlier than 21 days after the ballot distribution date. In addition, the Secretary (in consultation with the PBGC and the Secretary of Labor) may specify a later date to end the voting period in appropriate circumstances.

(B) *Required use of automated voting system.* Votes must be cast using an automated voting system that meets the requirements of paragraph (h)(2)(iv)(C) of this section. Votes cast by any other method are invalid.

(C) *Automated voting system.* An automated voting system meets the requirements of this paragraph (h)(2)(iv)(C) only if the system—

(*1*) Collects votes cast by eligible voters both electronically (through a Web site) and telephonically (through a toll-free number using a touch-tone or interactive voice response); and

(*2*) Accepts only votes cast during the voting period by an eligible voter who provides the eligible voter's unique identifier described in paragraph (h)(2)(iii)(A)(*2*) of this section.

(D) *Policies and procedures.* The Secretary of the Treasury (in consultation with the PBGC and the Secretary of Labor) may establish such policies and procedures as may be necessary to facilitate the administration of the vote under this paragraph (h)(2). These policies and procedures may include, but are not limited to, establishing a process for an eligible voter to challenge the vote.

(v) *Determination of whether a majority of the eligible voters has voted to reject the suspension.* Within 7 calendar days after the end of the voting period, the Secretary of the Treasury (in consultation with the PBGC and the Secretary of Labor) will—

(A) Certify that a majority of all eligible voters has voted to reject the suspension that was approved under paragraph (g) of this section, or

(B) Issue a final authorization to suspend as described in paragraph (h)(6) of this section.

* * * * *

(3) * * *

(iv) *Statement in opposition to the proposed suspension.* The statement in opposition to the proposed suspension that is prepared from comments received on the application, as required under section 432(e)(9)(H)(iii)(II), will be compiled by the Secretary of Labor and will be written in accordance with the rules of paragraph (h)(3)(ii) of this section. If no comments in opposition are received, the statement in opposition to the proposed suspension will include a statement indicating that there were no such comments.

(v) *Model ballot.* A model ballot may be published in the form of a revenue procedure, notice, or other guidance published in the Internal Revenue Bulletin.

* * * * *

(7) *Effective/applicability date.* Paragraph (h)(2) and paragraphs (h)(3)(iv) and (v) of this section apply on and after June 17, 2015.

(8) *Expiration date.* The applicability of paragraph (h)(2) and paragraphs (h)(3)(iv) and (v) of this section expires on June 15, 2018.

* * * * *

John M. Dalrymple,

Deputy Commissioner for Services and Enforcement.

Approved: August 25, 2015.

Mark J. Mazur,

Assistant Secretary of the Treasury (Tax Policy).

[FR Doc. 2015–21766 Filed 8–31–15; 11:15 am]

BILLING CODE 4830–01–P

DEPARTMENT OF THE TREASURY

Internal Revenue Service

26 CFR Part 1

[TD 9733]

RIN 1545–BJ49

United States Property Held by Controlled Foreign Corporations in Transactions Involving Partnerships; Rents and Royalties Derived in the Active Conduct of a Trade or Business

AGENCY: Internal Revenue Service (IRS), Treasury.

ACTION: Final and temporary regulations.

SUMMARY: This document contains temporary regulations regarding the treatment as United States property of property held by a controlled foreign corporation (CFC) in connection with certain transactions involving partnerships. In addition, the temporary regulations provide rules regarding when a CFC is considered to derive rents and royalties in the active conduct of a trade or business for purposes of determining foreign personal holding company income (FPHCI). These regulations affect United States shareholders of CFCs. The text of the temporary regulations also serves as the text of the proposed regulations set forth in the notice of proposed rulemaking on this subject in the Proposed Rules section of this issue of the **Federal Register**. The final regulations revise and add cross-references to coordinate the application of the temporary regulations.

DATES: *Effective Date:* These regulations are effective on September 2, 2015.

Applicability Dates: For dates of applicability, see §§ 1.954–2T(j) and 1.956–1T(g).

FOR FURTHER INFORMATION CONTACT: Rose E. Jenkins, (202) 317–6934 (not a toll-free number).

SUPPLEMENTARY INFORMATION:

Background

This document contains amendments to 26 CFR part 1 under of the Internal Revenue Code (Code). Section 956 determines the amount that a United States shareholder (as defined in section 951(b)) of a CFC must include in gross income with respect to the CFC under section 951(a)(1)(B). This amount is determined, in part, based on the average amount of United States property held, directly or indirectly, by the CFC at the close of each quarter during its taxable year. Subject to certain exceptions, United States property generally includes obligations of United States persons that are related to the CFC. Sections 956(c)(1)(C), 956(c)(2)(F), and 956(c)(2)(L). In general, the amount taken into account for section 956 purposes with respect to any United States property is the adjusted basis of the property, reduced by any liability to which the property is subject. See section 956(a) and § 1.956–1(e).

Section 956(e) grants the Secretary authority to prescribe such regulations as may be necessary to carry out the purposes of section 956, including regulations to prevent the avoidance of section 956 through reorganizations or otherwise. In addition, section 956(d) grants the Secretary authority to prescribe regulations pursuant to which a CFC that is a pledgor or guarantor of an obligation of a United States person is considered to hold the obligation.

Section 1.956–1T(b)(4) provides in relevant part that, at the District Director's discretion, a CFC will be considered to hold indirectly investments in United States property acquired by any other foreign corporation that is controlled by the CFC if one of the principal purposes for creating, organizing, or funding (through capital contributions or debt) such other foreign corporation is to avoid the application of section 956 with respect to the CFC.

This document also contains amendments to 26 CFR part 1 under section 954. Section 954 defines foreign base company income (FBCI), which generally is income earned by a CFC that is taken into account in computing the amount that a United States shareholder of the CFC must include in income under section 951(a)(1)(A). FBCI includes FPHCI, as defined in section 954(c), which, in turn, generally includes rents and royalties. Section 954(c)(1)(A). However, rents and royalties are excluded from FPHCI if they are received from a person other than a related person and derived in the active conduct of a trade or business within the meaning of section 954(c)(2)(A) and § 1.954–2(c) and (d) (active rents and royalties exception). Temporary regulations in this document provide guidance on the active rents and royalties exception, including the treatment of cost sharing arrangements for purposes of the exception.

Explanation of Provisions

1. Modifications of Anti-Avoidance Rule in § 1.956–1T(b)(4)

A. Modifications of Existing Rules

These regulations modify § 1.956–1T(b)(4) so that the rule can also apply when a foreign corporation controlled by a CFC is funded other than through capital contributions or debt. In addition, these temporary regulations add an example involving the funding of one CFC by another CFC that controls it to illustrate the application of the anti-avoidance rule when a principal purpose for funding the first CFC is to avoid the application of section 956 with respect to the funding CFC, even though there would be a section 956 inclusion with respect to the CFC that received the funding. This example illustrates that the CFCs' tax attributes associated with a section 956 inclusion (such as total earnings and profits, previously taxed earnings and profits, and foreign tax credit pools) are taken into account in determining whether a principal purpose of a funding was to avoid the application of section 956 with respect to the funding CFC. In addition, this example makes clear that if a CFC is considered to indirectly hold United States property pursuant to § 1.956–1T(b)(4), then the CFC that actually holds the United States property will not also be considered to hold the property for purposes of section 956. See *Example 3* in § 1.956–1T(b)(4)(iv).

These regulations also modify *Example 1* and *Example 2* of § 1.956–1T(b)(4) to more closely reflect the language of new § 1.956–1T(b)(4)(iv). The Department of the Treasury (Treasury Department) and the IRS do not view these modifications as a substantive change.

Moreover, § 1.956–1T(b)(4) applies if ''one of the principal purposes'' for the transaction is to avoid the application of section 956 with respect to the CFC. These temporary regulations apply when ''a principal purpose'' for the transaction is to avoid the application of section 956 with respect to the CFC. The Treasury Department and the IRS do not view this modification as a substantive change, since both formulations appropriately reflect that there may be more than one principal purpose for a transaction. Accordingly, § 1.956–1T(b)(4) may be applied if a principal purpose of a transaction is to avoid the application of section 956, even if there also were other principal purposes for the transaction.

Finally, the Treasury Department and the IRS have concluded that § 1.956–1T(b)(4) should apply without requiring the IRS to exercise its discretion, and, therefore, have modified the rule to be self-executing. This modification, as well as the modification to what constitutes a funding, is consistent with a previous change to a similar rule in § 1.304–4(b). See TD 9477, 74 FR 69021 (Dec. 30, 2009).

B. New Partnership Rule

Existing § 1.956–1T(b)(4) applies only to transactions that involve foreign corporations that are controlled by a CFC. The Treasury Department and the IRS understand that taxpayers may be using partnerships to structure transactions that are similar to the types of transactions addressed by § 1.956–1T(b)(4). For example, with a principal purpose of avoiding the application of section 956, a CFC may contribute cash to a partnership in exchange for an interest in the partnership, which in

turn lends the cash to a United States shareholder of the CFC. In such a case, a taxpayer may take the position that the CFC is not treated as indirectly holding the entire obligation of the United States shareholder but instead is treated as holding the obligation only to the extent of the CFC's interest in the partnership under § 1.956–2(a)(3).

These types of partnership transactions raise concerns similar to those that are currently addressed by § 1.956–1T(b)(4). Accordingly, these temporary regulations expand § 1.956–1T(b)(4) to include transactions involving partnerships that are controlled by the CFC. These temporary regulations also contain a coordination rule in § 1.956–1T(b)(4)(iii), which provides that the new partnership rule in § 1.956–1T(b)(4)(i)(C) applies only to the extent that the amount of United States property that a CFC would be treated as holding under the rule exceeds the amount that it would be treated as holding under § 1.956–2(a)(3).

2. New Rule Governing Foreign Partnership Distributions Funded by CFCs

The Treasury Department and the IRS also understand that CFCs are engaging in transactions in which a CFC lends funds to a foreign partnership, which then distributes the proceeds from the borrowing to a U.S. partner who is related to the CFC and whose obligation would be United States property if it were held (or treated as held) by the CFC. Alternatively, the CFC could guarantee a loan to a foreign partnership, which then could distribute the loan proceeds to a related U.S. partner. Taxpayers take the position that section 956 does not apply to these transactions even though the CFC's earnings are effectively repatriated to a related U.S. partner.

In response to these transactions, the temporary regulations add § 1.956–1T(b)(5) to address certain cases in which a CFC funds a foreign partnership (or guarantees a borrowing by a foreign partnership) and the foreign partnership makes a distribution to a U.S. partner that is related to the CFC. For purposes of section 956, § 1.956–1T(b)(5) treats the partnership obligation as an obligation of the distributee partner to the extent of the lesser of the amount of the distribution that would not have been made but for the funding of the partnership or the amount of the foreign partnership obligation. For example, if a related United States shareholder of a CFC has an interest in a foreign partnership, the CFC lends $100 to the partnership, and the partnership distributes $100 to the United States shareholder in a distribution that would not have been made but for the loan from the CFC, then the entire $100 partnership obligation held by the CFC will be treated as an obligation of the United States shareholder that qualifies as United States property. Section 1.956–1T(b)(5) generally has the same purpose and effect as proposed § 1.956–4(c)(3) contained in the notice of proposed rulemaking on this subject in the Proposed Rules section of this issue of the **Federal Register** (REG–155164–09) and will be removed upon the finalization of proposed § 1.956–4(c)(3).

3. Active Rents and Royalties Exception to FPHCI

Although rents and royalties generally are included in FPHCI under section 954(c)(1)(A), rents and royalties derived in the active conduct of a trade or business and received from a person that is not a related person are excluded from FPHCI under the active rents and royalties exception in section 954(c)(2)(A) and § 1.954–2(b)(6). The section 954 regulations provide the exclusive rules for determining whether rents and royalties are derived in the active conduct of a trade or business for purposes of section 954(c)(2)(A). Specifically, § 1.954–2(c) provides four alternative ways for rents to be derived in the active conduct of a trade or business, and § 1.954–2(d) provides two alternative ways for royalties to be derived in the active conduct of a trade or business. One way for a CFC to derive rents and royalties in the active conduct of a trade or business is to satisfy an ''active development'' test, which, among other things, requires the CFC to be ''regularly engaged'' either in the ''manufacture or production of, or in the acquisition and addition of substantial value to,'' certain property (§ 1.954–2(c)(1)(i), applicable to rents); or in the ''development, creation or production of, or in the acquisition of and addition of substantial value to,'' certain property (§ 1.954–2(d)(1)(i), applicable to royalties) (collectively, active development tests). Although certain of the alternative ways (specifically, the active management and marketing tests) in which a CFC can satisfy the active rents and royalties exception require that the relevant activities be performed by the CFC's own officers or staff of employees (§ 1.954–2(c)(1)(ii), (iv), and (d)(1)(ii)), the active development tests do not expressly contain this requirement. But see § 1.954–2(d)(3) *Example 5* (indicating that royalties received by a CFC that financed independent persons in development activities were not considered derived in the active conduct of a trade or business for purposes of section 954(c)(2)(A)).

In addition to the active development tests, another way for a CFC to derive rents and royalties in the active conduct of a trade or business is to satisfy an ''active marketing'' test, which, among other things, requires the CFC to operate in a foreign country an organization that is regularly engaged in the business of marketing, or marketing and servicing, the leased or licensed property, and that is ''substantial'' in relation to the amount of rents or royalties derived from the leased or licensed property. See § 1.954–2(c)(1)(iv) and (d)(1)(ii). Pursuant to a safe harbor in the regulations, an organization is ''substantial'' if the active leasing or licensing expenses equal or exceed 25 percent of the adjusted leasing or licensing profits. See § 1.954–2(c)(2)(ii) and (d)(2)(ii). The regulations generally define active leasing expenses and active licensing expenses to mean, subject to certain exceptions, deductions that are properly allocable to rental or royalty income and that would be allowable under section 162 if the CFC were a domestic corporation. See § 1.954–2(c)(2)(iii) and (d)(2)(iii).

In general, the active rents and royalties exception is intended to distinguish between a CFC that passively receives investment income and a CFC that derives income from the active conduct of a trade or business. See S. Rep. No. 87–1881, 87th Cong., 2d Sess., at 83 (1962). Accordingly, the policy underlying the active rents and royalties exception requires that the CFC itself actively conduct the business that generates the rents or royalties. The Treasury Department and the IRS have determined that, consistent with this policy, the CFC must perform the relevant activities (that is, activities related to the manufacturing, production, development, or creation of, or, in the case of an acquisition, the addition of substantial value to, the property at issue) through its own officers or staff of employees in order to satisfy the active development tests. Thus, § 1.954–2T(c)(1)(i) and (d)(1)(i) expressly provide that the CFC lessor or licensor must perform the required functions through its own officers or staff of employees.

The Treasury Department and the IRS also have concluded that the policy of the active rents and royalties exception allows the relevant activities undertaken by a CFC through its officers or staff of employees to be performed in more than one foreign country. Thus, § 1.954–2T(c)(1)(iv) and (d)(1)(ii) provide that (i) a CFC's officers or staff of employees may be located in one or more foreign

countries; and (ii) an organization that meets the requirements of the active marketing test can be maintained and operated by the officers or staff of employees either in a single foreign country or in multiple foreign countries collectively. Similarly, § 1.954–2T(c)(2)(ii) and (d)(2)(ii) indicate that an organization can be in a single foreign country or in multiple foreign countries collectively for purposes of determining the substantiality of the foreign organization.

In applying the active development tests and active marketing tests, questions have arisen as to the treatment of cost sharing arrangements under which a person other than the CFC actually conducts relevant activities. Consistent with the policy underlying the active rents and royalties exception that requires the CFC itself to conduct the relevant activities, § 1.954–2T(c)(2)(viii) and (d)(2)(v) clarify that CST Payments and PCT Payments (as defined in § 1.482–7(b)(1)) made by a CFC will not cause the CFC's officers and employees to be treated as undertaking the activities of the controlled participant to which the payments are made. This clarification applies for purposes of the active development tests and the active marketing tests, including for purposes of determining whether an organization that engages in marketing is substantial. Similarly, § 1.954–2T(c)(2)(iii)(E) and (d)(2)(iii)(E) provide that deductions for CST Payments and PCT Payments are excluded from the definition of active leasing expenses and active licensing expenses, respectively. Thus, CST Payments and PCT Payments are not active leasing expenses or active licensing expenses for purposes of determining whether an organization is ''substantial'' under the safe harbor test.

4. Effective/Applicability Dates

The rules in § 1.956–1T(b)(4) described in Part 1 of this preamble apply to taxable years of CFCs ending on or after September 1, 2015, and to taxable years of United States shareholders in which or with which such taxable years end, with respect to property acquired, including property treated as acquired as the result of a deemed exchange of property pursuant to section 1001, on or after September 1, 2015. The rule in § 1.956–1T(b)(5) described in Part 2 of this preamble applies to taxable years of CFCs ending on or after September 1, 2015, and to taxable years of United States shareholders in which or with which such taxable years end, in the case of distributions made on or after September 1, 2015. The rules regarding the active development test in §§ 1.954–2T(c)(1)(i) and (d)(1)(i) described in Part 3 of this preamble apply to rents or royalties, as applicable, received or accrued during taxable years of CFCs ending on or after September 1, 2015, and to taxable years of United States shareholders in which or with which such taxable years end, but only with respect to property manufactured, produced, developed, or created, or, in the case of acquired property, property to which substantial value has been added, on or after September 1, 2015. The rules regarding the active marketing test in §§ 1.954–2T(c)(1)(iv), (c)(2)(ii), (d)(1)(ii), and (d)(2)(ii) described in Part 3 of this preamble, as well as the rules regarding cost-sharing arrangements in §§ 1.954–2T(c)(2)(iii)(E), (c)(2)(viii), (d)(2)(iii)(E), and (d)(2)(v) also described in Part 3 of this preamble, apply to rents or royalties, as applicable, received or accrued during taxable years of CFCs ending on or after September 1, 2015, and to taxable years of United States shareholders in which or with which such taxable years end, to the extent that such rents or royalties that are received or accrued on or after September 1, 2015. No inference is intended as to the application of the provisions amended by these temporary regulations under current law. The IRS may, where appropriate, challenge transactions, including those described in these temporary regulations and this preamble, under currently applicable Code or regulatory provisions or judicial doctrines.

Special Analyses

Certain IRS regulations, including this one, are exempt from the requirements of Executive Order 12866, as supplemented and reaffirmed by Executive Order 13563. Therefore, a regulatory assessment is not required. It has been determined that sections 553(b) and (d) of the Administrative Procedure Act (5 U.S.C. chapter 5) do not apply to these regulations. For applicability of the Regulatory Flexibility Act (5 U.S.C. chapter 6), refer to the cross-referenced notice of proposed rulemaking published elsewhere in this issue of the **Federal Register**. Pursuant to section 7805(f) of the Internal Revenue Code, these regulations have been submitted to the Chief Counsel for Advocacy of the Small Business Administration for comment on its impact on small business.

Drafting Information

The principal authors of these regulations are Barbara E. Rasch and Rose E. Jenkins of the Office of Associate Chief Counsel (International). However, other personnel from the Treasury Department and the IRS participated in their development.

List of Subjects in 26 CFR Part 1

Income taxes, Reporting and recordkeeping requirements.

Amendments to the Regulations

Accordingly, 26 CFR part 1 is amended as follows:

PART 1—INCOME TAXES

■ **Paragraph 1.** The authority citation for part 1 is amended by adding entries in numerical order to read in part as follows:

Authority: 26 U.S.C. 7805 * * *

* * * * *

Section 1.956–1T also issued under 26 U.S.C. 956(d) and 956(e).

* * * * *

■ **Par. 2.** Section 1.954–2 is amended by:

■ a. Revising paragraphs (c)(1)(i), (c)(1)(iv), and (c)(2)(ii);

■ b. Adding paragraphs (c)(2)(iii)(E) and (c)(2)(viii);

■ c. Revising paragraphs (d)(1)(i) and (ii) and (d)(2)(ii); and

■ d. Adding paragraphs (d)(2)(iii)(E), (d)(2)(v), and (j).

The revisions and additions read as follows:

§ 1.954–2 Foreign personal holding company income.

* * * * *

(c) * * *

(1) * * *

(i) [Reserved]. For further guidance, see § 1.954–2T(c)(1)(i).

* * * * *

(iv) [Reserved]. For further guidance, see § 1.954–2T(c)(1)(iv).

(2) * * *

(ii) [Reserved]. For further guidance, see § 1.954–2T(c)(2)(ii).

(iii) * * *

(E) [Reserved]. For further guidance, see § 1.954–2T(c)(2)(iii)(E).

* * * * *

(viii) [Reserved]. For further guidance, see § 1.954–2T(c)(2)(viii).

* * * * *

(d) * * *

(1) * * *

(i) [Reserved]. For further guidance, see § 1.954–2T(d)(1)(i).

(ii) [Reserved]. For further guidance, see § 1.954–2T(d)(1)(ii).

(2) * * *

(ii) [Reserved]. For further guidance, see § 1.954–2T(d)(2)(ii).

(iii) * * *

(E) [Reserved]. For further guidance, see § 1.954–2T(d)(2)(iii)(E).

* * * * *

(v) [Reserved]. For further guidance, see § 1.954–2T(d)(2)(v).

* * * * *

(j) [Reserved]. For further guidance, see § 1.954–2T(j).

■ **Par. 3.** Section 1.954–2T is added to read as follows:

§ 1.954–2T Foreign personal holding company income (temporary).

(a)(1) through (c)(1) introductory text [Reserved]. For further guidance, see § 1.954–2(a)(1) through (c)(1).

(i) Property that the lessor, through its own officers or staff of employees, has manufactured or produced, or property that the lessor has acquired and, through its own officers or staff of employees, added substantial value to, but only if the lessor, through its officers or staff of employees, is regularly engaged in the manufacture or production of, or in the acquisition and addition of substantial value to, property of such kind;

(c)(1)(ii) and (iii) [Reserved]. For further guidance, see § 1.954–2(c)(1)(ii) and (c)(1)(iii).

(iv) Property that is leased as a result of the performance of marketing functions by such lessor through its own officers or staff of employees located in a foreign country or countries, if the lessor, through its officers or staff of employees, maintains and operates an organization either in such country or in such countries (collectively), as applicable, that is regularly engaged in the business of marketing, or of marketing and servicing, the leased property and that is substantial in relation to the amount of rents derived from the leasing of such property.

(c)(2)(i) [Reserved]. For further guidance, see § 1.954–2(c)(2)(i).

(ii) *Substantiality of foreign organization.* For purposes of paragraph (c)(1)(iv) of this section, whether an organization either in a foreign country or in foreign countries (collectively) is substantial in relation to the amount of rents is determined based on all the facts and circumstances. However, such an organization will be considered substantial in relation to the amount of rents if active leasing expenses, as defined in paragraph (c)(2)(iii) of this section, equal or exceed 25 percent of the adjusted leasing profit, as defined in paragraph (c)(2)(iv) of this section. In addition, for purposes of aircraft or vessels leased in foreign commerce, an organization will be considered substantial if active leasing expenses, as defined in paragraph (c)(2)(iii) of this section, equal or exceed 10 percent of the adjusted leasing profit, as defined in paragraph (c)(2)(iv) of this section. For purposes of paragraphs (c)(1)(iv) and (c)(2) of this section and § 1.956–2(b)(1)(vi), the term *aircraft or vessels* includes component parts, such as engines that are leased separately from an aircraft or vessel.

(c)(2)(iii) introductory text through (c)(2)(iii)(D) [Reserved]. For further guidance, see § 1.954–2(c)(2)(iii) through (c)(2)(iii)(D).

(E) Deductions for CST Payments or PCT Payments (as defined in § 1.482–7(b)).

(c)(2)(iv) through (c)(2)(vii) [Reserved]. For further guidance, see § 1.954–2(c)(2)(iv) through (c)(2)(vii).

(viii) *Cost sharing arrangements (CSAs).* For purposes of paragraphs (c)(1)(i) and (iv) of this section, CST Payments or PCT Payments (as defined in § 1.482–7(b)(1)) made by the lessor to another controlled participant (as defined in § 1.482–7(j)(1)(i)) pursuant to a CSA (as defined in § 1.482–7(a)) do not cause the activities undertaken by that other controlled participant to be considered to be undertaken by the lessor's own officers or staff of employees.

(c)(3) and (d)(1) introductory text [Reserved]. For further guidance, see § 1.954–2(c)(3) and (d)(1).

(i) Property that the licensor, through its own officers or staff of employees, has developed, created, or produced, or property that the licensor has acquired and, through its own officers or staff of employees, added substantial value to, but only so long as the licensor, through its officers or staff of employees, is regularly engaged in the development, creation, or production of, or in the acquisition and addition of substantial value to, property of such kind; or

(ii) Property that is licensed as a result of the performance of marketing functions by such licensor through its own officers or staff of employees located in a foreign country or countries, if the licensor, through its officers or staff of employees, maintains and operates an organization either in such foreign country or in such foreign countries (collectively), as applicable, that is regularly engaged in the business of marketing, or of marketing and servicing, the licensed property and that is substantial in relation to the amount of royalties derived from the licensing of such property.

(d)(2)(i) [Reserved]. For further guidance, see § 1.954–2(d)(2)(i).

(ii) *Substantiality of foreign organization.* For purposes of paragraph (d)(1)(ii) of this section, whether an organization either in a foreign country or in foreign countries (collectively) is substantial in relation to the amount of royalties is determined based on all of the facts and circumstances. However, such an organization will be considered substantial in relation to the amount of royalties if active licensing expenses, as defined in paragraph (d)(2)(iii) of this section, equal or exceed 25 percent of the adjusted licensing profit, as defined in paragraph (d)(2)(iv) of this section.

(d)(2)(iii) introductory text through (d)(2)(iii)(D) [Reserved]. For further guidance, see § 1.954–2(d)(2)(iii) through (d)(2)(iii)(D).

(E) Deductions for CST Payments or PCT Payments (as defined in § 1.482–7(b)).

(d)(2)(iv) [Reserved]. For further guidance, see § 1.954–2(d)(2)(iv).

(v) *Cost sharing arrangements (CSAs).* For purposes of paragraphs (d)(1)(i) and (ii) of this section, CST Payments or PCT Payments (as defined in § 1.482–7(b)(1)) made by the licensor to another controlled participant (as defined in § 1.482–7(j)(1)(i)) pursuant to a CSA (as defined in § 1.482–7(a)) do not cause the activities undertaken by that other controlled participant to be considered to be undertaken by the licensor's own officers or staff of employees.

(d)(3) through (i) [Reserved]. For further guidance, see § 1.954–2(d)(3) through (i).

(j) *Effective/applicability date.* Paragraphs (c)(1)(i) and (d)(1)(i) of this section apply to rents or royalties, as applicable, received or accrued during taxable years of controlled foreign corporations ending on or after September 1, 2015, and to taxable years of United States shareholders in which or with which such taxable years end, but only with respect to property manufactured, produced, developed, or created, or in the case of acquired property, property to which substantial value has been added, on or after September 1, 2015. Paragraphs (c)(1)(iv), (c)(2)(ii), (c)(2)(iii)(E), (c)(2)(viii), (d)(1)(ii), (d)(2)(ii), (d)(2)(iii)(E), and (d)(2)(v) of this section apply to rents or royalties, as applicable, received or accrued during taxable years of controlled foreign corporations ending on or after September 1, 2015, and to taxable years of United States shareholders in which or with which such taxable years end, to the extent that such rents or royalties are received or accrued on or after September 1, 2015. See §§ 1.954–2(c)(1)(i), (c)(1)(iv), (c)(2)(ii), (c)(2)(iii), (d)(1)(i), (d)(1)(ii), (d)(2)(ii), and (d)(2)(iii), as contained in 26 CFR part 1 revised as of April 1, 2015, for rules applicable to rents or royalties, as applicable, received or accrued before September 1, 2015.

(k) *Expiration date.* The applicability of paragraphs (c)(1)(i), (c)(1)(iv), (c)(2)(ii), (c)(2)(iii)(E), (c)(2)(viii),

(d)(1)(i), (d)(1)(ii), (d)(2)(ii), (d)(2)(iii)(E), and (d)(2)(v) of this section expires on or before August 31, 2018.

■ **Par. 4.** Section 1.956–1 is amended by:

■ 1. Adding paragraphs (b)(4), (b)(5), (f), and (g)(1) through (3).

■ 2. Redesignating paragraph (e)(6)(vii) as paragraph (g)(4) and revising it.

The additions and revisions read as follows:

§ 1.956–1 Shareholder's pro rata share of a controlled foreign corporation's increase in earnings invested in United States property.

* * * * *

(b) * * *

(4) [Reserved]. For further guidance, see § 1.956–1T(b)(4).

(5) [Reserved]. For further guidance, see § 1.956–1T(b)(5).

* * * * *

(f) [Reserved]. For further guidance, see § 1.956–1T(f).

(g) introductory text through (g)(3) [Reserved]. For further guidance, see § 1.956–1T(g) through (g)(3).

(4) Paragraph (e)(6) of this section applies to property acquired in exchanges occurring on or after June 24, 2011. For transactions that occur prior to June 24, 2011, see § 1.956–1T(e)(6) as contained in 26 CFR part 1 revised as of April 1, 2011.

■ **Par. 5.** Section 1.956–1T is amended by revising paragraph (b)(4), and adding paragraphs (b)(5), (e)(6), (g), and (h) to read as follows:

§ 1.956–1T Shareholder's pro rata share of a controlled foreign corporation's increase in earnings invested in United States property (temporary).

* * * * *

(b) * * *

(4) *Certain indirectly held United States property*—(i) *General rule.* For purposes of section 956, United States property held indirectly by a controlled foreign corporation includes—

(A) United States property held on behalf of the controlled foreign corporation by a trustee or a nominee;

(B) United States property acquired by any other foreign corporation that is controlled by the controlled foreign corporation if a principal purpose of creating, organizing, or funding by any means (including through capital contributions or debt) the other foreign corporation is to avoid the application of section 956 with respect to the controlled foreign corporation; and

(C) Property acquired by a partnership that is controlled by the controlled foreign corporation if the property would be United States property if held directly by the controlled foreign corporation, and a principal purpose of creating, organizing, or funding by any means (including through capital contributions or debt) the partnership is to avoid the application of section 956 with respect to the controlled foreign corporation.

(ii) *Control.* For purposes of paragraphs (b)(4)(i)(B) and (C) of this section, a controlled foreign corporation controls a foreign corporation or partnership if the controlled foreign corporation and the other foreign corporation or partnership are related within the meaning of or section 707(b). For this purpose, in determining whether two corporations are members of the same controlled group under, a person is considered to own stock owned directly by such person, stock owned for the purposes of, and stock owned with the application of section 267(c).

(iii) *Coordination rule.* Paragraph (b)(4)(i)(C) of this section applies only to the extent that the amount of United States property that is treated as held indirectly by a controlled foreign corporation under that paragraph exceeds the amount of United States property that is treated as held by the controlled foreign corporation under § 1.956–2(a)(3).

(iv) *Examples.* The following examples illustrate the rules of this paragraph (b)(4). In each example, unless otherwise provided, P is a domestic corporation that wholly owns two controlled foreign corporations, FS1 and FS2.

Example 1. (i) *Facts.* FS1 sells inventory to FS2 in exchange for trade receivables due in 60 days. Avoiding the application of section 956 with respect to FS1 was not a principal purpose of establishing the trade receivables. FS2 has no earnings and profits and FS1 has substantial accumulated earnings and profits. FS2 makes a loan to P equal to the amount it owes FS1 under the trade receivables. FS2 pays the trade receivables according to their terms.

(ii) *Result.* FS1 will not be considered to indirectly hold United States property under this paragraph (b)(4) because the funding of FS2 through the sale of inventory in exchange for the establishment of trade receivables was not undertaken with a principal purpose of avoiding the application of section 956 with respect to FS1.

Example 2. (i) *Facts.* The facts are the same as in Example 1, except that, with a principal purpose of avoiding the application of section 956 with respect to FS1, FS1 and FS2 agree to defer FS2's payment obligation, and FS2 does not timely pay the receivables.

(ii) *Result.* FS1 is considered to hold indirectly United States property under this paragraph (b)(4), because there was a funding of FS2, a principal purpose of which was to avoid the application of section 956 with respect to FS1.

Example 3. (i) *Facts.* FS1 has $100x of post-1986 undistributed earnings and profits and $100 post-1986 foreign income taxes, but does not have any cash. FS2 has earnings and profits of at least $100x, no post-1986 foreign income taxes, and substantial cash. Neither FS1 nor FS2 has earnings and profits described in section 959(c)(1) or section 959(c)(2). FS2 loans $100x to FS1. FS1 then loans $100x to P. An income inclusion by P of $100x under sections 951(a)(1)(B) and 956 with respect to FS1 would result in foreign income taxes deemed paid by P under section 960. A principal purpose of funding FS1 through the loan from FS2 is to avoid the application of section 956 with respect to FS2.

(ii) *Result.* Under paragraph (b)(4)(i)(B) of this section, FS2 is considered to indirectly hold the $100x obligation of P that is held by FS1. As a result, P has an income inclusion of $100x under sections 951(a)(1)(B) and 956 with respect to FS2, and the foreign income taxes deemed paid by P under section 960 is $0. P does not have an income inclusion under sections 951(a)(1)(B) and 956 with respect to FS1 related to the $100x loan from FS1 to P.

Example 4. (i) *Facts.* FS1 has substantial earnings and profits. P and FS1 are the only partners in a foreign partnership, FPRS. FS1 contributes $600x cash to FPRS in exchange for a 60% interest in the partnership, and P contributes real estate located outside the United States ($400x value) to FPRS in exchange for a 40% interest in the partnership. There are no special allocations in the FPRS partnership agreement. FPRS lends $100x to P. Under § 1.956–2(a)(3), FS1 is treated as holding United States property of $60x (60% × $100x) as a result of the FPRS loan to P. A principal purpose of creating, organizing, or funding FPRS is to avoid the application of section 956 with respect to FS1.

(ii) *Result.* Before taking into account paragraph (b)(4)(iii) of this section, because FS1 controls FPRS and a principal purpose of creating, organizing, or funding FPRS was to avoid the application of section 956 with respect to FS1, FS1 is considered under paragraph (b)(4)(i)(C) of this section to indirectly hold the $100x obligation of P that would be United States property if held directly by FS1. However, under paragraph (b)(4)(iii) of this section, FS1 is treated as holding United States property under paragraph (b)(4)(i)(C) only to the extent the amount held indirectly under paragraph (b)(4)(i)(C) of this section exceeds the amount of United States property that FS1 is treated as holding under § 1.956–2(a)(3). The amount of United States property that FS1 is treated as indirectly holding under paragraph (b)(4)(i)(C) of this section ($100x) exceeds the amount determined under § 1.956–2(a)(3) ($60x) by $40x. Thus, FS1 is considered to hold United States property within the meaning of section 956(c) in the amount of $100x ($60x under § 1.956–2(a)(3) and $40x under paragraphs (b)(4)(i)(C) and (b)(4)(iii) of this section).

(5) *Certain foreign partnership distributions funded by CFCs*—(i) *General rule.* For purposes of section

956, an obligation of a foreign partnership that is held (or that would be treated as held under § 1.956–2(c) if the obligation were an obligation of a United States person) by a controlled foreign corporation is treated as a separate obligation of a partner in the partnership when—

(A) The foreign partnership distributes an amount of money or property to the partner;

(B) The foreign partnership would not have made the distribution but for a funding of the partnership through the obligation; and

(C) The partner is related to the controlled foreign corporation within the meaning of section 954(d)(3).

(ii) *Amount of obligation.* Notwithstanding § 1.956–1(e), the amount that is treated as an obligation of the distributee partner pursuant to paragraph (b)(5)(i) of this section is equal to the lesser of the amount of the partnership distribution that would not have been made but for the funding of the partnership or the amount (as determined under § 1.956–1(e)) of the obligation of the foreign partnership that is held (or that would be treated as held under § 1.956–2(c) if the obligation were an obligation of a United States person) by the controlled foreign corporation.

(iii) *Example.* (A) *Facts.* P, a domestic corporation, wholly owns FS, a controlled foreign corporation. P owns a 70% interest in FPRS, a foreign partnership. A domestic corporation that is unrelated to P and FS owns the remaining 30% interest in FPRS. FPRS borrows $100x from FS, and distributes $80x to P. FPRS would not have made the distribution to P but for the funding by FS.

(B) *Result.* Under paragraph (b)(5)(i) of this section, a portion of the obligation of FPRS that FS holds is treated as an obligation of P, which constitutes United States property, because FPRS made a distribution to P that FPRS would not have made but for the funding of FPRS through the obligation held by FS. Under paragraph (b)(5)(ii) of this section, the amount that is treated as an obligation of P is the lesser of the amount of the distribution, $80x, or the amount of the entire obligation of FPRS held by FS, $100x. For purposes of section 956, therefore, on the date the loan to FPRS is made, FS is considered to hold United States property of $80x.

* * * * *

(e)(6) [Reserved]. For further guidance, see § 1.956–1(e)(6).

* * * * *

(g) *Effective/applicability date.* (1) Paragraph (b)(4) of this section applies to taxable years of controlled foreign corporations ending on or after September 1, 2015, and to taxable years of United States shareholders in which or with which such taxable years end, with respect to property acquired on or after September 1, 2015. See paragraph (b)(4) of § 1.956–1T, as contained in 26 CFR part 1 revised as of April 1, 2015, for the rules applicable to taxable years of controlled foreign corporations ending before September 1, 2015 and property acquired before September 1, 2015. For purposes of this paragraph (g)(1), a deemed exchange of property pursuant to section 1001 on or after September 1, 2015 constitutes an acquisition of the property on or after that date.

(2) Paragraph (b)(5) of this section applies to taxable years of controlled foreign corporations ending on or after September 1, 2015, and to taxable years of United States shareholders in which or with which such taxable years end, in the case of distributions made on or after September 1, 2015.

(3) [Reserved].

(4) [Reserved]. For further guidance, see § 1.956–1(g)(4).

(h) *Expiration date.* The applicability of paragraphs (b)(4) and (b)(5) of this section expires on or before August 31, 2018.

Approved: July 30, 2015.

John Dalrymple,

Deputy Commissioner for Services and Enforcement.

Mark J. Mazur,

Assistant Secretary of the Treasury (Tax Policy).

[FR Doc. 2015–21574 Filed 9–1–15; 8:45 am]

BILLING CODE 4830–01–P

DEPARTMENT OF JUSTICE

Parole Commission

28 CFR Part 2

[Docket No. UPSC 2014–01]

Paroling, Recommitting and Supervising Federal Prisoners: Prisoners Serving Sentences Under the United States and District of Columbia Codes

AGENCY: United States Parole Commission, Justice.

ACTION: Final rule.

SUMMARY: The United States Parole Commission is revising its rules pertaining to decisions to revoke terms of supervision without a revocation hearing. The rule allows for a releasee charged with administrative violations or specifically identified misdemeanor crimes to apply for a prison sanction of 8 months or less. If a releasee qualifies and applies for a sanction under this section, the Commission may approve a revocation decision that includes no more than 8 months of imprisonment without using its normal guidelines for decision-making

DATES: Effective September 2, 2015.

FOR FURTHER INFORMATION CONTACT: Stephen J. Husk, Case Operations Administrator U.S. Parole Commission, 90 K Street NE., Washington, DC 20530, telephone (202) 346–7061. Questions about this publication are welcome, but inquiries concerning individual cases cannot be answered over the phone.

SUPPLEMENTARY INFORMATION:

Background

In the notice of proposed rulemaking published at 79 FR 47603–47605, we discussed the possible revision of our rules pertaining to decisions to revoke terms of supervision without a revocation hearing for persons charged with only administrative violations or specifically identified misdemeanor crimes. We refer you to the previous publication for a review of the background material. In the notice of proposed rulemaking, we encouraged the public to comment on our proposed changes and we received two written comments from interested persons and/or organizations. However, only one public comment, submitted by the Public Defender Service for the District of Columbia, suggested modifications to the proposed rule.

Public Comment From the Public Defender Service for the District of Columbia (PDS)

PDS recommends that we develop a new risk assessment tool to be applied to all residents of the District of Columbia. While we may review the effectiveness of risk assessment tools used for all cases under our jurisdiction, we believe that the final rule for special procedures for swift and short-term sanctions should be extended only to those persons who commit low level violations of supervision.

Paragraph (d)(3) of the proposed rule stated that, notwithstanding our general policy, when revoking supervised release for administrative violations under this paragraph, we may impose new terms of supervised release that are less than the maximum authorized term. PDS recommends that we provide training to our Hearing Examiners to impose shorter terms of supervision even when revoking supervised release for other types of violations.

Based on the comments, the final rule omits the language from paragraph (d)(3) of the proposed rule. We are permitted to impose periods of supervised release that are less than the maximum authorized term for all

supervised release violators. Therefore, the language from paragraph (d)(3) of the proposed rule is unnecessary and inaccurately implies that we are not permitted to impose shorter periods of supervised release when revoking for other types of violations.

PDS suggests that the inclusion of the proposed rule under the section entitled Revocation Decision Without a Hearing inaccurately implies that a person sanctioned under this paragraph is waiving any type of hearing and not just a revocation hearing. We believe that the proposed rule was included in the correct section. All other processes for revocation without a hearing outlined in § 2.66 refer to persons that waive a revocation hearing after a probable cause determination has been made. The procedures set forth in paragraph (d) are the same in that regard.

PDS expressed a concern that persons arrested outside the District of Columbia will not receive legal advice when deciding to apply for a sanction under paragraph (d)(1) of the proposed rule. Because all alleged violators of supervision are provided with the right to request an attorney at the probable cause proceeding, we are satisfied that all alleged violators who qualify for sanction under this paragraph will be provided with an attorney if they want one.

The proposed rule allows for a prison sanction of ''no more than 8 months'' for persons sentenced pursuant to § 2.66(d). During the pilot project that preceded publishing of the proposed rule, we issued policy statements to guide our Hearing Examiners as to the expected length of the prison term within the 8 month range. The policy statements provided a guide as to the length of the prison sanction based solely on the type of administrative violation that had occurred. However, the policy statements were not included in the proposed rule. PDS commented that failure to include these policy statements is inherently unfair because it punishes all administrative violations the same.

We have determined that it is not necessary to include the policy statements in the final rule. We have decided over 1,000 cases under these procedures since the pilot project began in 2012. A review of the data for those cases showed that we were not following the policy statements in a high number of cases. When the length of the prison term differed from what was suggested by the policy statements, the term was usually shorter than what was suggested. This included the decision to sentence over 200 alleged violators who had absconded from supervision to time served despite the policy statement that suggested that they serve between 5 and 8 months. There are a number of factors other than the type of violation that we consider in determining the length of a prison sanction. Based on our extensive experience in sanctioning alleged violators during the pilot project, we believe we can fairly consider all persons that qualify for a sanction under this section without using policy statements that are based solely on the type of administrative violation that has occurred.

PDS requested that the Commission eliminate or modify the requirement in paragraph (d)(1)(v) of the proposed rule that an alleged violator cannot be sanctioned twice under this section. We find this to be an appropriate requirement and consistent with the alleged violator's agreement to modify his or her non-compliant behavior to successfully complete any remaining period of supervision as indicated in (d)(1)(iv).

The proposed rule did not include any method for an alleged violator to ask the Commission to reconsider a decision to disapprove a sanction under this paragraph or to approve a sanction that is greater than recommended by a Hearing Examiner. It also did not require a Commissioner, when disapproving a case that qualifies, to provide a written explanation. PDS requested that the final rule include these procedures.

We have determined that these procedures are not necessary. To be sanctioned under this paragraph, an alleged violator must agree to a sanction of ''no more than 8 months.'' Thus, we do not believe it is appropriate to allow that same individual the right to petition the Commission to reconsider a decision that is within the scope of the written agreement. Also, a decision not to approve an alleged violator for a sanction under this paragraph only means that the Commission has decided that a revocation hearing will be conducted. If the alleged violator is not satisfied with the result of that hearing, he or she has the right to appeal the decision.

Executive Orders 12866 and 13563

This regulation has been drafted and reviewed in accordance with Executive Order 12866, ''Regulation Planning and Review,'' section 1(b), Principles of Regulation, and in accordance with Executive Order 13565, ''Improving Regulation and Regulatory Review,'' section 1(b), General Principles of Regulation. The Commission has determined that this rule is not a ''significant regulatory action'' under Executive Order 12866, section 3(f), Regulatory Planning and Review, and accordingly this rule has not been reviewed by the Office of Management and Budget.

Executive Order 13132

This rule will not have substantial direct effects on the States, on the relationship between the national government and the States, or on the distribution of power and responsibilities among the various levels of government. Under Executive Order 13132, this rule does not have sufficient federalism implications requiring a Federalism Assessment.

Regulatory Flexibility Act

The rule will not have a significant economic impact upon a substantial number of small entities within the meaning of the Regulatory Flexibility Act, 5 U.S.C. 605(b).

Unfunded Mandates Reform Act of 1995

The rule will not cause State, local, or tribal governments, or the private sector, to spend $100,000,000 or more in any one year, and it will not significantly or uniquely affect small governments. No action under the Unfunded Mandates Reform Act of 1995 is necessary.

Small Business Regulatory Enforcement Fairness Act of 1996 (Subtitle E—Congressional Review Act)

These rule is not a ''major rule'' as defined by Section 804 of the Small Business Regulatory Enforcement Fairness Act of 1996 Subtitle E—Congressional Review Act, now codified at 5 U.S.C. 804(2). The rule will not result in an annual effect on the economy of $100,000,000 or more; a major increase in costs or prices; or significant adverse effects on the ability of United States-based companies to compete with foreign-based companies. Moreover, this is a rule of agency practice or procedure that does not substantially affect the rights or obligations of non-agency parties, and does not come within the meaning of the term ''rule'' as used in Section 804(3)(C), now codified at 5 U.S.C. 804(3)(C). Therefore, the reporting requirement of 5 U.S.C. 801 does not apply.

List of Subjects in 28 CFR Part 2

Administrative practice and procedure, Prisoners, Probation and parole.

The Final Rule

Accordingly, the U.S. Parole Commission adopts the following amendments to 28 CFR part 2.

PART 2—[AMENDED]

■ 1. The authority citation for 28 CFR part 2 continues to read as follows:

Authority: 18 U.S.C. 4203(a)(1) and 4204(a)(6).

■ 2. In § 2.66, add paragraph (d) to read as follows:

§ 2.66 Revocation decision without hearing.

(d) *Special procedures for swift and short-term sanctions for administrative violations of supervision.* (1) An alleged violator may, at the time of the probable cause hearing or preliminary interview, waive the right to a revocation hearing and apply in writing for an immediate prison sanction of no more than 8 months. Notwithstanding the reparole guidelines at § 2.21, the Commission will consider such a sanction if—

(i) The releasee has not already postponed the initial probable cause hearing/preliminary interview by more than 30 days;

(ii) The charges alleged by the Commission do not include a violation of the law;

(iii) The releasee has accepted responsibility for the violations;

(iv) The releasee has agreed to modify the non-compliant behavior to successfully complete any remaining period of supervision; and

(v) The releasee has not already been sanctioned pursuant to this paragraph (d)(1).

(2) A sanction imposed pursuant to paragraph (d)(1) of this section may include any other action authorized by § 2.52, § 2.105, or § 2.218.

(3) Any case not approved by the Commission for a revocation sanction pursuant to paragraph (d)(1) of this section shall receive the normal revocation hearing procedures including the application of the guidelines at § 2.21.

Note to paragraph (d). For purpose of paragraph (d)(1) of this section only, the Commission will consider the sanctioning of the following crimes as administrative violations if they have been charged only as misdemeanors:

1. Public Intoxication
2. Possession of an Open Container of Alcohol
3. Urinating in Public
4. Traffic Violations
5. Disorderly Conduct/Breach of Peace
6. Driving without a License or with a revoked/suspended license
7. Providing False Information to a Police Officer
8. Loitering
9. Failure to Pay court ordered support (*i.e.* child support/alimony)
10. Solicitation/Prostitution
11. Resisting Arrest
12. Reckless Driving
13. Gambling
14. Failure to Obey a Police Officer
15. Leaving the Scene of an Accident (only if no injury occurred)-
16. Hitchhiking
17. Vending without a License
18. Possession of Drug Paraphernalia (indicating purpose of personal use only)
19. Possession of a Controlled Substance (for personal use only)

Dated: August 17, 2015.

J. Patricia Wilson Smoot,

Chairman, United States Parole Commission.

[FR Doc. 2015–21094 Filed 9–1–15; 8:45 am]

BILLING CODE P

DEPARTMENT OF LABOR

Mine Safety and Health Administration

30 CFR Parts 7, 18, 44, 46, 48, 49, 56, 57, 70, 71, 72, 74, 75, and 90

MSHA Headquarters, Pittsburgh Safety and Health Technology Center, and Respirable Dust Processing Laboratory Address Changes

AGENCY: Mine Safety and Health Administration, Labor.

ACTION: Final rule; technical amendment.

SUMMARY: The Mine Safety and Health Administration (MSHA) is amending its published regulations that include the Agency's addresses. MSHA relocated its Headquarters offices and also will discontinue renting the Post Office boxes it uses for mail delivery to the Pittsburgh Safety and Health Technology Center and Respirable Dust Processing Laboratory. In addition, MSHA is amending the incorporation by reference language in some of its regulations to include current addresses, telephone numbers, and internet addresses.

DATES: *Effective Date:* September 2, 2015.

FOR FURTHER INFORMATION CONTACT: Sheila A. McConnell, Acting Director, Office of Standards, Regulations, and Variances, MSHA, at *mcconnell.sheila.a@dol.gov* (email); 202–693–9440 (voice); or 202–693–9441 (facsimile). These are not toll-free numbers.

SUPPLEMENTARY INFORMATION: On June 15, 2015, MSHA moved its Headquarters offices from 1100 Wilson Boulevard, Arlington, VA 22209–3939 to 201 12th Street South, Arlington, VA 22202–5452. MSHA is amending its regulations to include MSHA's new address.

MSHA is also amending its regulations to update the mailing address of MSHA's Office of Technical Support, Pittsburgh Safety and Health Technology Center. MSHA will discontinue renting the Post Office boxes it uses for mail delivery. The mailing address for the Pittsburgh Safety and Health Technology Center's Respirable Dust Processing Laboratory is 626 Cochrans Mill Road, Building 38, Pittsburgh, PA 15236–3611. The mailing address to submit seal design applications for approval by the Pittsburgh Safety and Health Technology Center is 626 Cochrans Mill Road, Building 151, Pittsburgh, PA 15236–3611.

In addition, MSHA made other non-substantive changes to correct inaccurate names: §§ 48.3, 48.23, and 48.32 contain a non-substantive change to the name of the Administrator for Metal and Nonmetal Mine Safety and Health; §§ 7.505, 56.2, 57.2, and 75.301 contain a non-substantive change to the name of the Office of Standards, Regulations, and Variances; and §§ 49.3, 49.4, and 49.8 contain a non-substantive change to remove an obsolete or inapplicable name.

MSHA is also amending previously approved incorporation by reference (IBR) language in some MSHA regulations. The amendments conform to current Office of the Federal Register (OFR) format requirements for an IBR regarding publisher addresses, telephone numbers, and internet addresses, and include contact information for the National Archives and Records Administration (NARA).

This technical amendment is a procedural ''rule'' under 5 U.S.C. 551(4), and is not subject to the notice-and-comment rulemaking requirements in 5 U.S.C. 553. This action also does not constitute a ''regulatory action'' subject to Executive Order 12866. Accordingly, the regulations in 30 CFR parts 7, 18, 44, 46, 48, 49, 56, 57, 70, 71, 72, 74, 75, and 90 are amended to include updated information.

List of Subjects

30 CFR Part 7

Explosives, Incorporation by reference, Mine safety and health, Reporting and recordkeeping requirements, Research.

30 CFR Part 18

Mine safety and health, Reporting and recordkeeping requirements.

30 CFR Part 44

Administrative practice and procedure, Mine safety and health, Reporting and recordkeeping requirements.

30 CFR Part 46

Education, Mine safety and health, Reporting and recordkeeping requirements.

30 CFR Part 48

Education, Mine safety and health, Reporting and recordkeeping requirements.

30 CFR Part 49

Education, Mine safety and health, Reporting and recordkeeping requirements.

30 CFR Part 56

Chemicals, Electric power, Explosives, Fire prevention, Hazardous substances, Incorporation by reference, Metals, Mine safety and health, Reporting and recordkeeping requirements.

30 CFR Part 57

Chemicals, Electric power, Explosives, Fire prevention, Gases, Hazardous substances, Incorporation by reference, Metals, Mine safety and health, Radiation protection, Reporting and recordkeeping requirements.

30 CFR Part 70

Incorporation by reference, Mine safety and health, Reporting and recordkeeping requirements.

30 CFR Part 71

Hazardous substances, Incorporation by reference, Mine safety and health, Reporting and recordkeeping requirements, Water supply.

30 CFR Part 72

Coal, Incorporation by reference, Mine safety and health.

30 CFR Part 74

Incorporation by reference, Mine safety and health, Occupational safety and health.

30 CFR Part 75

Communications equipment, Electric power, Emergency medical services, Explosives, Fire prevention, Incorporation by reference, Mine safety and health, Reporting and recordkeeping requirements.

30 CFR Part 90

Black lung benefits, Incorporation by reference, Mine safety and health, Reporting and recordkeeping requirements.

Dated: August 19, 2015.

Joseph A. Main,

Assistant Secretary of Labor for Mine Safety and Health.

For the reasons set out in the preamble, and under the authority of the Federal Mine Safety and Health Act of 1977, as amended, MSHA is amending chapter I of title 30 of the Code of Federal Regulations as follows:

PART 7—TESTING BY APPLICANT OR THIRD PARTY

■ 1. The authority citation for part 7 continues to read as follows:

Authority: 30 U.S.C. 957.

■ 2. Section 7.505 is amended by revising paragraph (b)(6) to read as follows:

§ 7.505 Structural components.

* * * * *

(b) * * *

(6) A test shall be conducted to demonstrate that each structure resists puncture and tearing when tested in accordance with ASTM D2582–07 ''Standard Test Method for Puncture-Propagation Tear Resistance of Plastic Film and Thin Sheeting.'' This publication is incorporated by reference. The Director of the Federal Register approves this incorporation by reference in accordance with 5 U.S.C. 552(a) and 1 CFR part 51. A copy may be obtained from the American Society for Testing and Materials (ASTM), 100 Barr Harbor Drive, P.O. Box C700, West Conshohocken, PA 19428–2959; 610–832–9500; *http://www.astm.org.* A copy may be inspected at any MSHA Coal Mine Safety and Health District Office; or at MSHA's Office of Standards, Regulations, and Variances, 201 12th Street South, Arlington, VA 22202–5452; 202–693–9440; or at the National Archives and Records Administration (NARA). For information on the availability of this material at NARA, call 202–741–6030, or go to: *http://www.archives.gov/federal_register/code_of_federal_regulations/ibr_locations.html.*

* * * * *

PART 18—ELECTRIC MOTOR-DRIVEN MINE EQUIPMENT AND ACCESSORIES

■ 3. The authority citation for part 18 continues to read as follows:

Authority: 30 U.S.C. 957, 961.

■ 4. Section 18.82 is amended by revising the second sentence of paragraph (a) to read as follows:

§ 18.82 Permit to use experimental electric face equipment in a gassy mine or tunnel.

(a) * * * The user shall submit a written application to the Assistant Secretary of Labor for Mine Safety and Health, 201 12th Street South, Arlington, VA 22202–5452, and send a copy to the U.S. Department of Labor, Mine Safety and Health Administration, Approval and Certification Center, 765 Technology Drive, Triadelphia, WV 26059.

* * * * *

PART 44—RULES OF PRACTICE FOR PETITIONS FOR MODIFICATION OF MANDATORY SAFETY STANDARDS

■ 5. The authority citation for part 44 continues to read as follows:

Authority: 30 U.S.C. 957.

■ 6. In § 44.10, revise the second sentence to read as follows:

§ 44.10 Filing of petition; service.

* * * All petitions must be in writing and must be filed with the Director, Office of Standards, Regulations, and Variances, Mine Safety and Health Administration, 201 12th Street South, Arlington, VA 22202–5452. * * *

■ 7. Section 44.21 is amended by revising the third sentence in paragraph (a) to read as follows:

§ 44.21 Filing and form of documents.

(a) * * * While the petition is before the Assistant Secretary at any stage of the proceeding, all documents should be filed with the Assistant Secretary of Labor for Mine Safety and Health, 201 12th Street South, Arlington, VA 22202–5452.

* * * * *

PART 46—TRAINING AND RETRAINING OF MINERS ENGAGED IN SHELL DREDGING OR EMPLOYED AT SAND, GRAVEL, SURFACE STONE, SURFACE CLAY, COLLOIDAL PHOSPHATE, OR SURFACE LIMESTONE MINES

■ 8. The authority citation for part 46 continues to read as follows:

Authority: 30 U.S.C. 811, 825.

■ 9. Section 46.2 is amended by revising paragraph (d)(1)(iii) to read as follows:

§ 46.2 Definitions.

* * * * *

(d)(1) * * *

(iii) A person who began employment as a miner after April 14, 1999, but before October 2, 2000, and who has

received new miner training under § 48.25 of this chapter or under proposed requirements published April 14, 1999, which are available from the Office of Standards, Regulations, and Variances, MSHA, 201 12th Street South, Arlington, VA 22202–5452; or,

* * * * *

■ 10. Section 46.3 is amended by revising the first sentence in paragraph (h) to read as follows:

§ 46.3 Training plans.

* * * * *

(h) If you, miners, or miners' representatives wish to appeal a decision of the Regional Manager, you must send the appeal, in writing, to the Director for Educational Policy and Development, MSHA, 201 12th Street South, Arlington, VA 22202–5452, within 30 calendar days after notification of the Regional Manager's decision. * * *

* * * * *

PART 48—TRAINING AND RETRAINING OF MINERS

■ 11. The authority citation for part 48 continues to read as follows:

Authority: 30 U.S.C. 811, 825.

■ 12. Section 48.3 is amended by revising the third sentence in paragraph (i) to read as follows:

§ 48.3 Training plans; time of submission; where filed; information required; time for approval; method for disapproval; commencement of training; approval of instructors.

* * * * *

(i) * * * A decision by the District Manager to revoke an instructor's approval may be appealed by the instructor to the Administrator for Coal Mine Safety and Health or Administrator for Metal and Nonmetal Mine Safety and Health, as appropriate, MSHA, 201 12th Street South, Arlington, VA 22202–5452. * * *

* * * * *

■ 13. Section 48.12 is amended by revising paragraph (a) to read as follows:

§ 48.12 Appeals procedures.

* * * * *

(a) In the event an operator, miner, or miners' representative decides to appeal a decision by a District Manager, such an appeal shall be submitted, in writing, to the Administrator for Coal Mine Safety and Health or the Administrator for Metal and Nonmetal Mine Safety and Health, as appropriate, MSHA, 201 12th Street South, Arlington, VA 22202–5452, within 30 days of notification of the District Manager's decision.

* * * * *

■ 14. Section 48.23 is amended by revising the third sentence in paragraph (i) to read as follows:

§ 48.23 Training plans; time of submission; where filed; information required; time for approval; method for disapproval; commencement of training; approval of instructors.

* * * * *

(i) * * * A decision by the District Manager to revoke an instructor's approval may be appealed by the instructor to the Administrator for Coal Mine Safety and Health or the Administrator for Metal and Nonmetal Mine Safety and Health, as appropriate, MSHA, 201 12th Street South, Arlington, VA 22202–5452. * * *

* * * * *

■ 15. Section 48.32 is amended by revising paragraph (a) to read as follows:

§ 48.32 Appeals procedures.

(a) In the event an operator, miner, or miners' representative decides to appeal a decision by the District Manager, such an appeal shall be submitted, in writing, to the Administrator for Coal Mine Safety and Health or the Administrator for Metal and Nonmetal Mine Safety and Health, as appropriate, MSHA, 201 12th Street South, Arlington, VA 22202–5452, within 30 days of notification of the District Manager's decision.

* * * * *

PART 49—MINE RESCUE TEAMS

■ 16. The authority citation for part 49 continues to read as follows:

Authority: 30 U.S.C. 811, 825(e).

■ 17. Section 49.3 is amended by revising the second sentence of paragraph (h)(2) to read as follows:

§ 49.3 Alternative mine rescue capability for small and remote mines.

* * * * *

(h) * * *

(2) * * * The operator may appeal this decision in writing to the Administrator for Metal and Nonmetal Mine Safety and Health, 201 12th Street South, Arlington, VA 22202–5452.

■ 18. Section 49.4 is amended by revising the second sentence of paragraph (i)(2) to read as follows:

§ 49.4 Alternative mine rescue capability for special mining conditions.

* * * * *

(i) * * *

(2) * * * The operator may appeal this decision in writing to the Administrator for Metal and Nonmetal Mine Safety and Health, 201 12th Street South, Arlington, VA 22202–5452.

■ 19. Section 49.8 is amended by revising the third sentence of paragraph (e) to read as follows:

§ 49.8 Training for mine rescue teams.

* * * * *

(e) * * * The affected instructor may appeal the decision of the District Manager by writing to the Administrator for Metal and Nonmetal Mine Safety and Health, MSHA, 201 12th Street South, Arlington, VA 22202–5452. * * *

* * * * *

PART 56—SAFETY AND HEALTH STANDARDS—SURFACE METAL AND NONMETAL MINES

■ 20. The authority citation for part 56 continues to read as follows:

Authority: 30 U.S.C. 811.

■ 21. In § 56.2, revise the definition for ''Laminated partition'' to read as follows:

§ 56.2 Definitions.

* * * * *

Laminated partition means a partition composed of the following material and minimum nominal dimensions: ½-inch-thick plywood, ½-inch-thick gypsum wallboard, ⅛-inch-thick low carbon steel, and ¼-inch-thick plywood, bonded together in that order (IME–22 Box). A laminated partition also includes alternative construction materials described in the Institute of Makers of Explosives (IME) Safety Library Publication No. 22, ''Recommendations for the Safe Transportation of Detonators in a Vehicle with Other Explosive Materials'' (May 1993), and the ''Generic Loading Guide for the IME–22 Container'' (October 1993). The IME is located at 1120 19th Street NW., Suite 310, Washington, DC 20036–3605; 202–429–9280; *https://www.ime.org.* This incorporation by reference has been approved by the Director of the Federal Register in accordance with 5 U.S.C. 552(a) and 1 CFR part 51. Copies are available at MSHA's Office of Standards, Regulations, and Variances, 201 12th Street South, Arlington, VA 22202–5452; 202–693–9440; and at all Metal and Nonmetal Mine Safety and Health District Offices, or available for inspection at the National Archives and Records Administration (NARA). For information on the availability of this material at NARA, call 202–741–6030, or go to: *http://www.archives.gov/*

federal_register/code_of_federal_regulations/ibr_locations.html.

* * * * *

■ 22. Section 56.6133 is amended by revising paragraph (b) to read as follows:

§ 56.6133 Powder chests.

* * * * *

(b) Detonators shall be kept in chests separate from explosives or blasting agents, unless separated by 4 inches of hardwood or equivalent, or a laminated partition. When a laminated partition is used, operators must follow the provisions of the Institute of Makers of Explosives (IME) Safety Library Publication No. 22, ''Recommendations for the Safe Transportation of Detonators in a Vehicle with Other Explosive Materials'' (May 1993), and the ''Generic Loading Guide for the IME–22 Container'' (October 1993). The IME is located at 1120 19th Street NW., Suite 310, Washington, DC 20036–3605; 202–429–9280; *https://www.ime.org.* This incorporation by reference has been approved by the Director of the Federal Register in accordance with 5 U.S.C. 552(a) and 1 CFR part 51. Copies are available at MSHA's Office of Standards, Regulations, and Variances, 201 12th Street South, Arlington, VA 22202–5452; 202–693–9440; and at all Metal and Nonmetal Mine Safety and Health District Offices, or available for inspection at the National Archives and Records Administration (NARA). For information on the availability of this material at NARA, call 202–741–6030, or go to: *http://www.archives.gov/federal_register/code_of_federal_regulations/ibr_locations.html.*

■ 23. Section 56.6201 is amended by revising paragraphs (a)(2) and (b)(2) to read as follows:

§ 56.6201 Separation of transported explosive material.

* * * * *

(a) * * *

(2) Separated from explosives or blasting agents by 4 inches of hardwood or equivalent, or a laminated partition. The hardwood or equivalent shall be fastened to the vehicle or conveyance. When a laminated partition is used, operators must follow the provisions of the Institute of Makers of Explosives (IME) Safety Library Publication No.22, ''Recommendations for the Safe Transportation of Detonators in a Vehicle with Other Explosive Materials'' (May 1993), and the ''Generic Loading Guide for the IME–22 Container'' (October 1993). The IME is located at 1120 19th Street NW., Suite 310, Washington, DC 20036–3605; 202–429–9280; *https://www.ime.org.* This incorporation by reference has been approved by the Director of the Federal Register in accordance with 5 U.S.C. 552(a) and 1 CFR part 51. Copies are available at MSHA's Office of Standards, Regulations, and Variances, 201 12th Street South, Arlington, VA 22202–5452; 202–693–9440; and at all Metal and Nonmetal Mine Safety and Health District Offices, or available for inspection at the National Archives and Records Administration (NARA). For information on the availability of this material at NARA, call 202–741–6030, or go to: *http://www.archives.gov/federal_register/code_of_federal_regulations/ibr_locations.html.*

(b) * * *

(2) Separated from explosives or blasting agents by 4 inches of hardwood or equivalent, or a laminated partition. The hardwood or equivalent shall be fastened to the vehicle or conveyance. When a laminated partition is used, operators must follow the provisions of IME Safety Library Publication No. 22, ''Recommendations for the Safe Transportation of Detonators in a Vehicle with Other Explosive Materials'' (May 1993), and the ''Generic Loading Guide for the IME–22 Container'' (October 1993). The IME is located at 1120 19th Street NW., Suite 310, Washington, DC 20036–3605; 202–429–9280; *https://www.ime.org.* This incorporation by reference has been approved by the Director of the Federal Register in accordance with 5 U.S.C. 552(a) and 1 CFR part 51. Copies are available at MSHA's Office of Standards, Regulations, and Variances, 201 12th Street South, Arlington, VA 22202–5452; 202–693–9440; and at all Metal and Nonmetal Mine Safety and Health District Offices, or available for inspection at the National Archives and Records Administration (NARA). For information on the availability of this material at NARA, call 202–741–6030, or go to: *http://www.archives.gov/federal_register/code_of_federal_regulations/ibr_locations.html.*

■ 24. Section 56.14130 is amended by revising paragraph (j) to read as follows:

§ 56.14130 Roll-over protective structures (ROPS) and seat belts.

* * * * *

(j) *Publications.* The incorporation by reference of these publications is approved by the Director of the Federal Register in accordance with 5 U.S.C. 552(a) and 1 CFR part 51. Copies of these publications may be examined at any Metal and Nonmetal Mine Safety and Health District Office; at MSHA's Office of Standards, Regulations, and Variances, 201 12th Street South, Arlington, VA 22202–5452; 202–693–9440; or at the National Archives and Records Administration (NARA). For information on the availability of this material at NARA, call 202–741–6030, or go to: *http://www.archives.gov/federal_register/code_of_federal_regulations/ibr_locations.html.* Copies may be purchased from the Society of Automotive Engineers, 400 Commonwealth Drive, Warrendale, PA 15096–0001; 724–776–4841; *http://www.sae.org.*

■ 25. Section 56.14131 is amended by revising paragraph (d) to read as follows:

§ 56.14131 Seat belts for haulage trucks.

* * * * *

(d) The incorporation by reference of these publications is approved by the Director of the Federal Register in accordance with 5 U.S.C. 552(a) and 1 CFR part 51. Copies of these publications may be examined at any Metal and Nonmetal Mine Safety and Health District Office; at MSHA's Office of Standards, Regulations, and Variances, 201 12th Street South, Arlington, VA 22202–5452; 202–693–9440; or at the National Archives and Records Administration (NARA). For information on the availability of this material at NARA, call 202–741–6030, or go to: *http://www.archives.gov/federal_register/code_of_federal_regulations/ibr_locations.html.* Copies may be purchased from the Society of Automotive Engineers, 400 Commonwealth Drive, Warrendale, PA 15096–0001; 724–776–4841; *http://www.sae.org.*

PART 57—SAFETY AND HEALTH STANDARDS—UNDERGROUND METAL AND NONMETAL MINES

■ 26. The authority citation for part 57 continues to read as follows:

Authority: 30 U.S.C. 811.

■ 27. In § 57.2, revise the definition for ''Laminated partition'' to read as follows:

§ 57.2 Definitions.

* * * * *

Laminated partition means a partition composed of the following material and minimum nominal dimensions: ½-inch-thick plywood, ½-inch-thick gypsum wallboard, ⅛-inch-thick low carbon steel, and ¼-inch-thick plywood, bonded together in that order (IME–22 Box). A laminated partition also includes alternative construction materials described in the Institute of Makers of Explosives (IME) Safety Library Publication No. 22, ''Recommendations for the Safe Transportation of Detonators in a Vehicle with Other Explosive Materials''

(May 1993), and the ''Generic Loading Guide for the IME–22 Container'' (October 1993). The IME is located at 1120 19th Street NW., Suite 310, Washington, DC 20036–3605; 202–429–9280; *https://www.ime.org.* This incorporation by reference has been approved by the Director of the Federal Register in accordance with 5 U.S.C. 552(a) and 1 CFR part 51. Copies are available at MSHA's Office of Standards, Regulations, and Variances, 201 12th Street South, Arlington, VA 22202–5452; 202–693–9440; and at all Metal and Nonmetal Mine Safety and Health District Offices, or available for inspection at the National Archives and Records Administration (NARA). For information on the availability of this material at NARA, call 202–741–6030, or go to: *http://www.archives.gov/federal_register/code_of_federal_regulations/ibr_locations.html.*

* * * * *

■ 28. Section 57.6133 is amended by revising paragraph (b) to read as follows:

§ 57.6133 Powder chests.

* * * * *

(b) Detonators shall be kept in chests separate from explosives or blasting agents, unless separated by 4 inches of hardwood or equivalent, or a laminated partition. When a laminated partition is used, operators must follow the provisions of the Institute of Makers of Explosives (IME) Safety Library Publication No. 22, ''Recommendations for the Safe Transportation of Detonators in a Vehicle with Other Explosive Materials'' (May 1993), and the ''Generic Loading Guide for the IME–22 Container'' (October 1993). The IME is located at 1120 19th Street NW., Suite 310, Washington, DC 20036–3605; 202–429–9280; *https://www.ime.org.* This incorporation by reference has been approved by the Director of the Federal Register in accordance with 5 U.S.C. 552(a) and 1 CFR part 51. Copies are available at MSHA's Office of Standards, Regulations, and Variances, 201 12th Street South, Arlington, VA 22202–5452; 202–693–9440; and at all Metal and Nonmetal Mine Safety and Health District Offices, or available for inspection at the National Archives and Records Administration (NARA). For information on the availability of this material at NARA, call 202–741–6030, or go to: *http://www.archives.gov/federal_register/code_of_federal_regulations/ibr_locations.html.*

■ 29. Section 57.6201 is amended by revising paragraphs (a)(2) and (b)(2) to read as follows:

§ 57.6201 Separation of transported explosive material.

* * * * *

(a) * * *

(2) Separated from explosives or blasting agents by 4 inches of hardwood or equivalent, or a laminated partition. The hardwood or equivalent shall be fastened to the vehicle or conveyance. When a laminated partition is used, operators must follow the provisions of the Institute of Makers of Explosives (IME) Safety Library Publication No. 22, ''Recommendations for the Safe Transportation of Detonators in a Vehicle with Other Explosive Materials'' (May 1993), and the ''Generic Loading Guide for the IME–22 Container'' (October 1993). The IME is located at 1120 19th Street NW., Suite 310, Washington, DC 20036–3605; 202–429–9280; *https://www.ime.org.* This incorporation by reference has been approved by the Director of the Federal Register in accordance with 5 U.S.C. 552(a) and 1 CFR part 51. Copies are available at MSHA's Office of Standards, Regulations, and Variances, 201 12th Street South, Arlington, VA 22202–5452; 202–693–9440; and at all Metal and Nonmetal Mine Safety and Health District Offices, or available for examination at the National Archives and Records Administration (NARA). For information on the availability of this material at NARA, call 202–741–6030, or go to: *http://www.archives.gov/federal_register/code_of_federal_regulations/ibr_locations.html.*

(b) * * *

(2) Separated from explosives or blasting agents by 4 inches of hardwood or equivalent, or a laminated partition. The hardwood or equivalent shall be fastened to the vehicle or conveyance. When a laminated partition is used, operators must follow the provisions of IME Safety Library Publication No. 22, ''Recommendations for the Safe Transportation of Detonators in a Vehicle with Other Explosive Materials'' (May 1993), and the ''Generic Loading Guide for the IME–22 Container'' (October 1993). The IME is located at 1120 19th Street NW., Suite 310, Washington, DC 20036–3605; 202–429–9280; *https://www.ime.org.* This incorporation by reference has been approved by the Director of the Federal Register in accordance with 5 U.S.C. 552(a) and 1 CFR part 51. Copies are available at MSHA's Office of Standards, Regulations, and Variances, 201 12th Street South, Arlington, VA 22202–5452; 202–693–9440; and at all Metal and Nonmetal Mine Safety and Health District Offices, or available for examination at the National Archives and Records Administration (NARA). For information on the availability of this material at NARA, call 202–741–6030, or go to: *http://www.archives.gov/federal_register/code_of_federal_regulations/ibr_locations.html.*

■ 30. Section 57.14130 is amended by revising paragraph (j) to read as follows:

§ 57.14130 Roll-over protective structures (ROPS) and seat belts for surface equipment.

* * * * *

(j) *Publications.* The incorporation by reference of these publications is approved by the Director of the Federal Register in accordance with 5 U.S.C. 552(a) and 1 CFR part 51. Copies of these publications may be examined at any Metal and Nonmetal Mine Safety and Health District Office; at MSHA's Office of Standards, Regulations, and Variances, 201 12th Street South, Arlington, VA 22202–5452; 202–693–9440; or at the National Archives and Records Administration (NARA). For information on the availability of this material at NARA, call 202–741–6030, or go to: *http://www.archives.gov/federal_register/code_of_federal_regulations/ibr_locations.html.* Copies may be purchased from the Society of Automotive Engineers, 400 Commonwealth Drive, Warrendale, PA 15096–0001; 724–776–4841; *http://www.sae.org.*

■ 31. Section 57.14131 is amended by revising paragraph (d) to read as follows:

§ 57.14131 Seat belts for surface haulage trucks.

* * * * *

(d) The incorporation by reference of these publications is approved by the Director of the Federal Register in accordance with 5 U.S.C. 552(a) and 1 CFR part 51. Copies of these publications may be examined at any Metal and Nonmetal Mine Safety and Health District Office; at MSHA's Office of Standards, Regulations, and Variances, 201 12th Street South, Arlington, VA 22202–5452; 202–693–9440; or at the National Archives and Records Administration (NARA). For information on the availability of this material at NARA, call 202–741–6030, or go to: *http://www.archives.gov/federal_register/code_of_federal_regulations/ibr_locations.html.* Copies may be purchased from the Society of Automotive Engineers, 400 Commonwealth Drive, Warrendale, PA 15096–0001; 724–776–4841; *http://www.sae.org.*

■ 32. Section 57.22005 is amended by revising the first sentence in paragraph (b) to read as follows:

§ 57.22005 Notice and appeal of placement or change in placement.

* * * * *

(b) The mine operator or representative of miners may obtain review of the Administrator's determination by filing a request for a hearing with the Assistant Secretary of Labor for Mine Safety and Health, Mine Safety and Health Administration, 201 12th Street South, Arlington, VA 22202–5452 within 30 days of the Administrator's determination. * * *

* * * * *

PART 70—MANDATORY HEALTH STANDARDS—UNDERGROUND COAL MINES

■ 33. The authority citation for part 70 continues to read as follows:

Authority: 30 U.S.C. 811, 813(h), 957.

■ 34. Section 70.204 is amended by revising paragraph (e) to read as follows:

§ 70.204 Approved sampling devices; maintenance and calibration.

* * * * *

(e) You must proceed in accordance with ''Calibration and Maintenance Procedures for Coal Mine Respirable Dust Samplers,'' MSHA Informational Report IR 1240 (1996), referenced in paragraph (a) of this section. The Director of the Federal Register approves this incorporation by reference in accordance with 5 U.S.C. 552(a) and 1 CFR part 51. You may obtain a copy from the MSHA Web site at *http://www.msha.gov* and you may inspect or obtain a copy at MSHA, Coal Mine Safety and Health, 201 12th Street South, Arlington, VA 22202–5452; 202–693–9500; and at each MSHA Coal Mine Safety and Health District Office, or at the National Archives and Records Administration (NARA). For information on the availability of this material at NARA, call 202–741–6030, or go to: *http://www.archives.gov/federal_register/code_of_federal_regulations/ibr_locations.html.*

■ 35. Section 70.210 is amended by revising paragraph (a) to read as follows:

§ 70.210 Respirable dust samples; transmission by operator.

(a) If using a CMDPSU, the operator shall transmit within 24 hours after the end of the sampling shift all samples collected to fulfill the requirements of this part, including control filters, in containers provided by the manufacturer of the filter cassette to: Respirable Dust Processing Laboratory, Pittsburgh Safety and Health Technology Center, 626 Cochrans Mill Road, Building 38, Pittsburgh, PA 15236–3611, or to any other address designated by the District Manager.

* * * * *

■ 36. Section 70.1900 is amended by revising paragraph (c) to read as follows:

§ 70.1900 Exhaust Gas Monitoring.

* * * * *

(c) Except as provided in § 75.325(j) of this chapter, when sampling results indicate a concentration of CO and/or NO_2 exceeding an action level of 50 percent of the threshold limit values (TLV®) adopted by the American Conference of Governmental Industrial Hygienists, the mine operator shall immediately take appropriate corrective action to reduce the concentrations of CO and/or NO_2 to below the applicable action level. The publication, ''Threshold Limit Values for Substance in Workroom Air'' (1972) is incorporated by reference and may be inspected at MSHA's Office of Standards, Regulations, and Variances, 201 12th Street South, Arlington, VA 22202–5452; 202–693–9440; at any MSHA Coal Mine Safety and Health District Office; or at the National Archives and Records Administration (NARA). For information on the availability of this material at NARA, call 202–741–6030, or go to: *http://www.archives.gov/federal_register/code_of_federal_regulations/ibr_locations.html.* This incorporation by reference was approved by the Director of the Federal Register in accordance with 5 U.S.C. 552(a) and 1 CFR part 51. In addition, copies of the document may be purchased from the American Conference of Governmental Industrial Hygienists, 1330 Kemper Meadow Drive, Attn: Customer Service, Cincinnati, OH 45240; 513–742–2020; *http://www.acgih.org.*

* * * * *

PART 71—MANDATORY HEALTH STANDARDS—SURFACE COAL MINES AND SURFACE WORK AREAS OF UNDERGROUND COAL MINES

■ 37. The authority citation for part 71 continues to read as follows:

Authority: 30 U.S.C. 811, 813(h), 957.

■ 38. Section 71.204 is amended by revising paragraph (e) to read as follows:

§ 71.204 Approved sampling devices; maintenance and calibration.

* * * * *

(e) You must proceed in accordance with ''Calibration and Maintenance Procedures for Coal Mine Respirable Dust Samplers,'' MSHA Informational Report IR 1240 (1996), referenced in paragraph (a) of this section. The Director of the Federal Register approves this incorporation by reference in accordance with 5 U.S.C. 552(a) and 1 CFR part 51. You may obtain a copy from the MSHA Web site at *http://www.msha.gov* and you may inspect or obtain a copy at MSHA, Coal Mine Safety and Health, 201 12th Street South, Arlington, VA 22202–5452; 202–693–9500; and at each MSHA Coal Mine Safety and Health District Office, or at the National Archives and Records Administration (NARA). For information on the availability of this material at NARA, call 202–741–6030, or go to: *http://www.archives.gov/federal_register/code_of_federal_regulations/ibr_locations.html.*

■ 39. Section 71.207 is amended by revising paragraph (a) to read as follows:

§ 71.207 Respirable dust samples; transmission by operator.

(a) If using a CMDPSU, the operator shall transmit within 24 hours after the end of the sampling shift all samples collected to fulfill the requirements of this part, including control filters, in containers provided by the manufacturer of the filter cassette to: Respirable Dust Processing Laboratory, Pittsburgh Safety and Health Technology Center, 626 Cochrans Mill Road, Building 38, Pittsburgh, PA 15236–3611, or to any other address designated by the District Manager.

* * * * *

■ 40. Section 71.402 is amended by revising paragraph (b) to read as follows:

§ 71.402 Minimum requirements for bathing facilities, change rooms, and sanitary flush toilet facilities.

* * * * *

(b) Bathing facilities, change rooms, and sanitary flush toilet facilities shall be constructed and equipped so as to comply with applicable State and local building codes. However, where no State or local building codes apply to these facilities, or where no State or local building codes exist, the facilities shall be constructed and equipped so as to meet the minimum construction requirements in the National Building Code (1967 edition) and the plumbing requirements in the National Plumbing Code (ASA A40.8–1955), which documents are hereby incorporated by reference and made a part hereof. These documents are available for examination at MSHA's Office of Standards, Regulations, and Variances, 201 12th Street South, Arlington, VA 22202–5452; 202–693–9440; and at every MSHA Coal Mine Safety and Health District Office. Copies of the National Plumbing Code (ASA A40.8–1955) may be purchased from the American

National Standards Institute, Inc., 25 W. 43rd Street, 4th Floor, New York, NY 10036; *http://www.ansi.org.*

* * * * *

■ 41. Section 71.700 is amended by revising paragraph (a) to read as follows:

§ 71.700 Inhalation hazards; threshold limit values for gases, dust, fumes, mists, and vapors.

(a) No operator of an underground coal mine and no operator of a surface coal mine may permit any person working at a surface installation or surface worksite to be exposed to airborne contaminants (other than respirable coal mine dust, respirable dust containing quartz, and asbestos dust) in excess of, on the basis of a time-weighted average, the threshold limit values adopted by the American Conference of Governmental Industrial Hygienists in ''Threshold Limit Values of Airborne Contaminants'' (1972), which is hereby incorporated by reference and made a part hereof. Excursions above the listed threshold limit values shall not be of greater magnitude than is characterized as permissible by the conference. This paragraph does not apply to airborne contaminants given a ''C'' designation by the conference in the document. This document is available for examination at MSHA's Office of Standards, Regulations, and Variances, 201 12th Street South, Arlington, VA 22202–5452; 202–693–9440; and at every MSHA Coal Mine Safety and Health District Office. Copies of the document may be purchased from the American Conference of Governmental Industrial Hygienists, 1330 Kemper Meadow Drive, Attn: Customer Service, Cincinnati, OH 45240; 513–742–2020; *http://www.acgih.org.*

* * * * *

PART 72—HEALTH STANDARDS FOR COAL MINES

■ 42. The authority citation for part 72 continues to read as follows:

Authority 30 U.S.C. 811, 813(h), 957.

■ 43. Revise § 72.710 to read as follows:

§ 72.710 Selection, fit, use, and maintenance of approved respirators.

In order to ensure the maximum amount of respiratory protection, approved respirators shall be selected, fitted, used, and maintained in accordance with the provisions of the American National Standards Institute's ''Practices for Respiratory Protection ANSI Z88.2–1969,'' which is hereby incorporated by reference. This publication may be obtained from the American National Standards Institute, Inc., 25 W. 43rd Street, 4th Floor, New York, NY 10036; *http://www.ansi.org,* and may be inspected at any MSHA Coal Mine Safety and Health District Office, or at MSHA's Office of Standards, Regulations, and Variances, 201 12th Street South, Arlington, VA 22202–5452; 202–693–9440; or at the National Archives and Records Administration (NARA). For information on the availability of this material at NARA, call 202–741–6030, or go to: *http://www.archives.gov/federal_register/code_of_federal_regulations/ibr_locations.html.* This incorporation by reference was approved by the Director of the Federal Register in accordance with 5 U.S.C. 552(a) and 1 CFR part 51.

PART 74—COAL MINE DUST SAMPLING DEVICES

■ 44. The authority citation for part 74 continues to read as follows:

Authority: 30 U.S.C. 957.

■ 45. Section 74.7 is amended by revising paragraphs (f)(1)(ii), (f)(2)(ii), and (g)(2) to read as follows:

§ 74.7 Design and construction requirements.

* * * * *

(f) * * *

(1) * * *

(ii) Persons may inspect a copy at MSHA, Office of Standards, Regulations, and Variances, 201 12th Street South, Arlington, VA 22202–5452, 202–693–9440, or at the National Archives and Records Administration (NARA). For information on the availability of this material at NARA, call 202–741–6030, or go to: *http://www.archives.gov/federal_register/code_of_federal_regulations/ibr_locations.html.*

(2) * * *

(ii) Persons may inspect a copy at MSHA, Office of Standards, Regulations, and Variances, 201 12th Street South, Arlington, VA 22202–5452, 202–693–9440, or at the National Archives and Records Administration (NARA). For information on the availability of this material at NARA, call 202–741–6030, or go to: *http://www.archives.gov/federal_register/code_of_federal_regulations/ibr_locations.html.*

(g) * * *

(2) Persons may inspect a copy at MSHA, Office of Standards, Regulations, and Variances, 201 12th Street South, Arlington, VA 22202–5452; 202–693–9440; or at the National Archives and Records Administration (NARA). For information on the availability of this material at NARA, call 202–741–6030, or go to: *http://www.archives.gov/federal_register/code_of_federal_regulations/ibr_locations.html.*

* * * * *

■ 46. Section 74.8 is amended by revising paragraph (f)(2) to read as follows:

§ 74.8 Measurement, accuracy, and reliability requirements.

* * * * *

(f) * * *

(2) Persons may inspect a copy at MSHA, Office of Standards, Regulations, and Variances, 201 12th Street South, Arlington, VA 22202–5452; 202–693–9440; or at the National Archives and Records Administration (NARA). For information on the availability of this material at NARA, call 202–741–6030, or go to: *http://www.archives.gov/federal_register/code_of_federal_regulations/ibr_locations.html.*

■ 47. Section 74.9 is amended by revising paragraph (a)(3) to read as follows:

§ 74.9 Quality assurance.

(a) * * *

(3) Persons may inspect a copy at MSHA, Office of Standards, Regulations, and Variances, 201 12th Street South, Arlington, VA 22202–5452; 202–693–9440; or at the National Archives and Records Administration (NARA). For information on the availability of this material at NARA, call 202–741–6030, or go to: *http://www.archives.gov/federal_register/code_of_federal_regulations/ibr_locations.html.*

* * * * *

PART 75—MANDATORY SAFETY STANDARDS—UNDERGROUND COAL MINES

■ 48. The authority citation for part 75 continues to read as follows:

Authority: 30 U.S.C. 811, 813(h), 957.

■ 49. In § 75.301, the definitions of ''Noncombustible structure or area'' and ''Noncombustible material'' are revised to read as follows:

§ 75.301 Definitions.

* * * * *

Noncombustible structure or area. Describes a structure or area that will continue to provide protection against flame spread for at least 1 hour when subjected to a fire test incorporating an ASTM E119–88 time/temperature heat input, or equivalent. The publication ASTM E119–88 ''Standard Test

Methods for Fire Tests of Building Construction and Materials'' is incorporated by reference and may be inspected at any MSHA Coal Mine Safety and Health District Office, or at MSHA's Office of Standards, Regulations, and Variances, 201 12th Street South, Arlington, VA 22202–5452; 202–693–9440; or at the National Archives and Records Administration (NARA). For information on the availability of this material at NARA, call 202–741–6030, or go to: *http://www.archives.gov/federal_register/code_of_federal_regulations/ibr_locations.html.* In addition, copies of the document can be purchased from the American Society for Testing and Materials (ASTM), 100 Barr Harbor Drive, P.O. Box C700, West Conshohocken, PA 19428–2959; 610–832–9500; *http://www.astm.org.* This incorporation by reference was approved by the Director of the Federal Register in accordance with 5 U.S.C. 552(a) and 1 CFR part 51.

Noncombustible material. Describes a material that, when used to construct a ventilation control, results in a control that will continue to serve its intended function for 1 hour when subjected to a fire test incorporating an ASTM E119–88 time/temperature heat input, or equivalent. The publication ASTM E119–88 ''Standard Test Methods for Fire Tests of Building Construction and Materials'' is incorporated by reference and may be inspected at any Coal Mine Safety and Health District Office, or at MSHA's Office of Standards, Regulations, and Variances, 201 12th Street South, Arlington, VA 22202–5452; 202–693–9440; or at the National Archives and Records Administration (NARA). For information on the availability of this material at NARA, call 202–741–6030, or go to: *http://www.archives.gov/federal_register/code_of_federal_regulations/ibr_locations.html.* In addition, copies of the document can be purchased from the American Society for Testing and Materials (ASTM), 100 Barr Harbor Drive, P.O. Box C700, West Conshohocken, PA 19428–2959; 610–832–9500; *http://www.astm.org.* This incorporation by reference was approved by the Director of the Federal Register in accordance with 5 U.S.C. 552(a) and 1 CFR part 51.

* * * * *

■ 50. Revise § 75.322 to read as follows:

§ 75.322 Harmful quantities of noxious gases.

Concentrations of noxious or poisonous gases, other than carbon dioxide, shall not exceed the threshold limit values (TLV) as specified and applied by the American Conference of Governmental Industrial Hygienists in ''Threshold Limit Values for Substance in Workroom Air'' (1972). Detectors or laboratory analysis of mine air samples shall be used to determine the concentrations of harmful, noxious, or poisonous gases. This incorporation by reference has been approved by the Director of the Federal Register in accordance with 5 U.S.C. 552(a) and 1 CFR part 51. Copies are available from MSHA's Office of Standards, Regulations, and Variances, 201 12th Street South, Arlington, VA 22202–5452; 202–693–9440; and at every MSHA Coal Mine Safety and Health District Office. The material is available for examination at the National Archives and Records Administration (NARA). For information on the availability of this material at NARA, call 202–741–6030, or go to: *http://www.archives.gov/federal_register/code_of_federal_regulations/ibr_locations.html.*

■ 51. Section 75.333 is amended by revising paragraphs (d)(1), (e)(1)(i), (e)(3), and (f) to read as follows:

§ 75.333 Ventilation controls.

* * * * *

(d) * * *

(1) Made of noncombustible material or coated on all accessible surfaces with flame-retardant materials having a flame-spread index of 25 or less, as tested under ASTM E162–87, ''Standard Test Method for Surface Flammability of Materials Using a Radiant Heat Energy Source.'' This publication is incorporated by reference and may be inspected at any MSHA Coal Mine Safety and Health District Office, or at MSHA's Office of Standards, Regulations, and Variances, 201 12th Street South, Arlington, VA 22202–5452; 202–693–9440; and at the National Archives and Records Administration (NARA). For information on the availability of this material at NARA, call 202–741–6030, or go to: *http://www.archives.gov/federal_register/code_of_federal_regulations/ibr_locations.html.* In addition, copies of the document can be purchased from the American Society for Testing and Materials (ASTM), 100 Barr Harbor Drive, P.O. Box C700, West Conshohocken, PA 19428–2959; 610–832–9500; *http://www.astm.org.* This incorporation by reference was approved by the Director of the Federal Register in accordance with 5 U.S.C. 552(a) and 1 CFR part 51.

* * * * *

(e)(1)(i) Except as provided in paragraphs (e)(2), (3), and (4) of this section, all overcasts, undercasts, shaft partitions, permanent stoppings, and regulators, installed after June 10, 1996, shall be constructed in a traditionally accepted method and of materials that have been demonstrated to perform adequately or in a method and of materials that have been tested and shown to have a minimum strength equal to or greater than the traditionally accepted in-mine controls. Tests may be performed under ASTM E72–80, ''Standard Methods of Conducting Strength Tests of Panels for Building Construction'' (Section 12–Transverse Load–Specimen Vertical, load, only), or the operator may conduct comparative in-mine tests. In-mine tests shall be designed to demonstrate the comparative strength of the proposed construction and a traditionally accepted in-mine control. The publication ASTM E72–80, ''Standard Methods of Conducting Strength Tests of Panels for Building Construction,'' is incorporated by reference and may be inspected at any MSHA Coal Mine Safety and Health District Office, or at MSHA's Office of Standards, Regulations, and Variances, 201 12th Street South, Arlington, VA 22202–5452; 202–693–9440; and at the National Archives and Records Administration (NARA). For information on the availability of this material at NARA, call 202–741–6030, or go to: *http://www.archives.gov/federal_register/code_of_federal_regulations/ibr_locations.html.* In addition, copies of the document can be purchased from the American Society for Testing and Materials (ASTM), 100 Barr Harbor Drive, P.O. Box C700, West Conshohocken, PA 19428–2959; 610–832–9500; *http://www.astm.org.* This incorporation by reference was approved by the Director of the Federal Register in accordance with 5 U.S.C. 552(a) and 1 CFR part 51.

* * * * *

(3) When timbers are used to create permanent stoppings in heaving or caving areas, the stoppings shall be coated on all accessible surfaces with a flame-retardant material having a flame-spread index of 25 or less, as tested under ASTM E162–87, ''Standard Test Method for Surface Flammability of Materials Using a Radiant Heat Energy Source.'' This publication is incorporated by reference and may be inspected at any MSHA Coal Mine Safety and Health District Office, or at MSHA's Office of Standards, Regulations, and Variances, 201 12th Street South, Arlington, VA 22202–5452; 202–693–9440; and at the National Archives and Records

Administration (NARA). For information on the availability of this material at NARA, call 202–741–6030, or go to: *http://www.archives.gov/federal_register/code_of_federal_regulations/ibr_locations.html.* In addition, copies of the document can be purchased from the American Society for Testing and Materials (ASTM), 100 Barr Harbor Drive, P.O. Box C700, West Conshohocken, PA 19428–2959; 610–832–9500; *http://www.astm.org.* This incorporation by reference was approved by the Director of the Federal Register in accordance with 5 U.S.C. 552(a) and 1 CFR part 51.

* * * * *

(f) When sealants are applied to ventilation controls, the sealant shall have a flame-spread index of 25 or less under ASTM E162–87, ''Standard Test Method for Surface Flammability of Materials Using a Radiant Heat Energy Source.'' This publication is incorporated by reference and may be inspected at any MSHA Coal Mine Safety and Health District Office, or at MSHA's Office of Standards, Regulations, and Variances, 201 12th Street South, Arlington, VA 22202–5452; 202–693–9440; and at the National Archives and Records Administration (NARA). For information on the availability of this material at NARA, call 202–741–6030, or go to: *http://www.archives.gov/federal_register/code_of_federal_regulations/ibr_locations.html.* In addition, copies of the document can be purchased from the American Society for Testing and Materials (ASTM), 100 Barr Harbor Drive, P.O. Box C700, West Conshohocken, PA 19428–2959; 610–832–9500; *http://www.astm.org.* This incorporation by reference was approved by the Director of the Federal Register in accordance with 5 U.S.C. 552(a) and 1 CFR part 51.

* * * * *

■ 52. Section 75.335 is amended by revising the introductory text to paragraph (b) to read as follows:

§ 75.335 Seal strengths, design applications, and installation.

* * * * *

(b) *Seal design applications.* Seal design applications from seal manufacturers or mine operators shall be in accordance with paragraph (b)(1) or (2) of this section and submitted for approval to MSHA's Office of Technical Support, Pittsburgh Safety and Health Technology Center, 626 Cochrans Mill Road, Building 151, Pittsburgh, PA 15236–3611.

* * * * *

■ 53. Section 75.523–1 is amended by revising the first sentence in paragraph (c) to read as follows:

§ 75.523–1 Deenergization of self-propelled electric face equipment installation requirements.

* * * * *

(c) An operator may apply to the Director of Technical Support, Mine Safety and Health Administration, Department of Labor, 201 12th Street South, Arlington, VA 22202–5452; 202–693–9440; for approval of the installation of devices to be used in lieu of devices that will quickly deenergize the tramming motors of self-propelled electric face equipment in the event of an emergency. * * *

■ 54. Section 75.818 is amended by revising paragraph (b)(4) to read as follows:

§ 75.818 Use of insulated cable handling equipment.

* * * * *

(b) * * *

(4) Be electrically tested every 6 months in accordance with publication ASTM F496–97. ASTM F496–97 (Standard Specification for In-Service Care of Insulating Gloves and Sleeves, 1997) is incorporated by reference and may be inspected at any MSHA Coal Mine Safety and Health District Office, or at MSHA's Office of Standards, Regulations, and Variances, 201 12th Street South, Arlington, VA 22202–5452; 202–693–9440; and at the National Archives and Records Administration (NARA). For information on the availability of this material at NARA, call 202–741–6030, or go to: *http://www.archives.gov/federal_register/code_of_federal_regulations/ibr_locations.html.* In addition, copies of the document can be purchased from the American Society for Testing and Materials, 100 Barr Harbor Drive, P.O. Box C700, West Conshohocken, PA 19428–2959; 610–832–9500; *http://www.astm.org.* This incorporation by reference was approved by the Director of the Federal Register in accordance with 5 U.S.C. 552(a) and 1 CFR part 51.

■ 55. Section 75.833 is amended by revising paragraph (c)(1) to read as follows:

§ 75.833 Handling high-voltage trailing cables.

* * * * *

(c) * * *

(1) The rubber gloves must be designed and maintained to have a voltage rating of at least Class 1 (7,500 volts) and tested every 30 days in accordance with publication ASTM F496–02a, ''Standard Specification for In-Service Care of Insulating Gloves and Sleeves'' (2002). The Director of the Federal Register approved this incorporation by reference in accordance with 5 U.S.C. 522(a) and 1 CFR part 51. ASTM F496–02a may be obtained from the American Society for Testing and Materials, 100 Barr Harbor Drive, P.O. Box C700, West Conshohocken, PA 19428–2959, call 610–832–9500 or go to *http://www.astm.org.* ASTM F496–02a is available for inspection at any MSHA Coal Mine Safety and Health District Office, at the MSHA Office of Standards, Regulations, and Variances, 201 12th Street South, Arlington, VA 22202–5452; 202–693–9440; or at the National Archives and Records Administration (NARA). For information on the availability of this material at NARA, call 202–741–6030, or go to: *http://www.archives.gov/federal_register/code_of_federal_regulations/ibr_locations.html.*

* * * * *

■ 56. Section 75.1710–1 is amended by revising the first sentence in paragraph (f) to read as follows:

§ 75.1710–1 Canopies or cabs; self-propelled diesel-powered and electric face equipment; installation requirements.

* * * * *

(f) An operator may apply to the Director of Technical Support, Mine Safety and Health Administration, Department of Labor, 201 12th Street South, Arlington, VA 22202–5452, for approval of the installation of devices to be used in lieu of substantially constructed canopies or cabs on self-propelled diesel-powered and electric face equipment. * * *

■ 57. In § 75.1900, the definition of ''Noncombustible material'' is revised to read as follows:

§ 75.1900 Definitions.

* * * * *

Noncombustible material. A material that will continue to serve its intended function for 1 hour when subjected to a fire test incorporating an ASTM E119–88 time/temperature heat input, or equivalent. The publication ASTM E119–88 ''Standard Test Methods for Fire Tests of Building Construction and Materials'' is incorporated by reference and may be inspected at any MSHA Coal Mine Safety and Health District Office; at MSHA's Office of Standards, Regulations, and Variances, 201 12th Street South, Arlington, VA 22202–5452; 202–693–9440; or at the National Archives and Records Administration (NARA). For information on the availability of this material at NARA,

call 202–741–6030, or go to: *http://www.archives.gov/federal_register/code_of_federal_regulations/ibr_locations.html.* This incorporation by reference was approved by the Director of the Federal Register in accordance with 5 U.S.C. 552(a) and 1 CFR part 51. In addition, copies of the document may be purchased from the American Society for Testing and Materials (ASTM), 100 Barr Harbor Drive, P.O. Box C700, West Conshohocken, PA, 19428–2959; 610–832–9500; *http://www.astm.org.*

* * * * *

PART 90—MANDATORY HEALTH STANDARDS—COAL MINERS WHO HAVE EVIDENCE OF PNEUMOCONIOSIS

■ 58. The authority citation for part 90 continues to read as follows:

Authority: 30 U.S.C. 811, 813(h), 957.

■ 59. Section 90.3 is amended by revising paragraph (d) and the first sentence in paragraph (e) to read as follows:

§ 90.3 Part 90 option; notice of eligibility; exercise of option.

* * * * *

(d) The option to work in a low dust area of the mine may be exercised for the first time by any miner employed at a coal mine who was eligible for the option under the old section 203(b) program (*http://www.msha.gov/REGSTECHAMEND.htm*), or is eligible for the option under this part by sending a written request to the Chief, Division of Health, Coal Mine Safety and Health, MSHA, 201 12th Street South, Arlington, VA 22202–5452.

(e) The option to work in a low dust area of the mine may be re-exercised by any miner employed at a coal mine who exercised the option under the old section 203(b) program (*http://www.msha.gov/REGSTECHAMEND.htm*) or exercised the option under this part by sending a written request to the Chief, Division of Health, Coal Mine Safety and Health, MSHA, 201 12th Street South, Arlington, VA 22202–5452. * * *

* * * * *

■ 61. Section 90.204 is amended by revising paragraph (e) to read as follows:

§ 90.204 Approved sampling devices; maintenance and calibration.

* * * * *

(e) You must proceed in accordance with ''Calibration and Maintenance Procedures for Coal Mine Respirable Dust Samplers,'' MSHA Informational Report IR 1240 (1996), referenced in paragraph (a) of this section. The Director of the Federal Register approves this incorporation by reference in accordance with 5 U.S.C. 552(a) and 1 CFR part 51. You may obtain a copy from the MSHA Web site at *http://www.msha.gov* and you may inspect or obtain a copy at MSHA, Coal Mine Safety and Health, 201 12th Street South, Arlington, VA 22202–5452; 202–693–9500; and at each MSHA Coal Mine Safety and Health District Office, or at the National Archives and Records Administration (NARA). For information on the availability of this material at NARA, call 202–741–6030, or go to: *http://www.archives.gov/federal_register/code_of_federal_regulations/ibr_locations.html.*

■ 62. Section 90.208 is amended by revising paragraph (a) to read as follows:

§ 90.208 Respirable dust samples; transmission by operator.

(a) If using a CMDPSU, the operator shall transmit within 24 hours after the end of the sampling shift all samples collected to fulfill the requirements of this part, including control filters, in containers provided by the manufacturer of the filter cassette to: Respirable Dust Processing Laboratory, Pittsburgh Safety and Health Technology Center, 626 Cochrans Mill Road, Building 38, Pittsburgh, PA 15236–3611, or to any other address designated by the District Manager.

* * * * *

[FR Doc. 2015–21054 Filed 9–1–15; 8:45 am]

BILLING CODE 4510–43–P

DEPARTMENT OF HOMELAND SECURITY

Coast Guard

33 CFR Part 100

[Docket No. USCG–2015–0738]

RIN 1625–AA08

Special Local Regulation; Southern California Annual Marine Events for the San Diego Captain of the Port Zone; San Diego Bay, San Diego, CA

AGENCY: Coast Guard, DHS.

ACTION: Temporary interim rule.

SUMMARY: The Coast Guard is temporarily changing the enforcement date of the special local regulation on the navigable waters of San Diego Bay, San Diego, California in support of the annual TriRock San Diego Triathlon. This temporary interim rule adjusts the date for the established special local regulations listed in 33 CFR 100.1101 (table 1, item 11). This temporary interim rule provides public notice and is necessary to ensure the safety of participants, crew, spectators, participating vessels, and other vessels and users of the waterway. Unauthorized persons and vessels are prohibited from entering into, transiting through, or anchoring within the regulated area unless authorized by the Captain of the Port (COTP), or his designated representative. The Coast Guard requests public comments on the temporary interim rule.

DATES: This rule is effective from 6:30 a.m. through 10:30 a.m. on September 20, 2015. Public comments must be received by September 19, 2015.

ADDRESSES: Submit comments using *one* of the listed methods, and see **SUPPLEMENTARY INFORMATION** for more information on public comments.

- *Online—http://www.regulations.gov* following Web site instructions.
- *Fax*—202–493–2251.
- *Mail* or *hand deliver*—Docket Management Facility (M–30), U.S. Department of Transportation, West Building Ground Floor, Room W12–140, 1200 New Jersey Avenue SE., Washington, DC 20590–0001. Hand delivery hours: 9 a.m. to 5 p.m., Monday through Friday, except Federal holidays (telephone 202–366–9329).

Documents mentioned in this preamble are part of docket [USCG–2015–0738]. To view documents mentioned in this preamble as being available in the docket, go to *http://www.regulations.gov,* type the docket number in the ''SEARCH'' box and click ''SEARCH.'' Click on Open Docket Folder on the line associated with this rulemaking. You may also visit the Docket Management Facility in Room W12–140 on the ground floor of the Department of Transportation West Building, 1200 New Jersey Avenue SE., Washington, DC 20590, between 9 a.m. and 5 p.m., Monday through Friday, except Federal holidays.

FOR FURTHER INFORMATION CONTACT: If you have questions on this rule, call or email Petty Officer Randolph Pahilanga, Waterways Management, U.S. Coast Guard Sector San Diego, Coast Guard; telephone 619–278–7656, email *D11MarineEventsSD@uscg.mil.* If you have questions on viewing or submitting material to the docket, call Cheryl Collins, Program Manager, Docket Operations, telephone (202) 366–9826.

SUPPLEMENTARY INFORMATION:

Table of Acronyms

DHS Department of Homeland Security
FR Federal Register
NPRM Notice of Proposed Rulemaking

BNM Broadcast Notice to Mariners
LNM Local Notice to Mariners
COTP Captain of the Port

A. Public Participation and Comments

We encourage you to submit comments (or related material) on this temporary interim rule. We will consider all submissions and may adjust our final action based on your comments. Comments should be marked with docket number USCG–2015–0738 and should provide a reason for each suggestion or recommendation. You should provide personal contact information so that we can contact you if we have questions regarding your comments; but please note that all comments will be posted to the online docket without change and that any personal information you include can be searchable online (see the **Federal Register** Privacy Act notice regarding our public dockets, 73 FR 3316, Jan. 17, 2008).

Mailed or hand-delivered comments should be in an unbound 8½ × 11 inch format suitable for reproduction. The Docket Management Facility will acknowledge receipt of mailed comments if you enclose a stamped, self-addressed postcard or envelope with your submission.

Documents mentioned in this notice, and all public comments, are in our online docket at *http://www.regulations.gov* and can be viewed by following the Web site's instructions. You can also view the docket at the Docket Management Facility (see the mailing address under **ADDRESSES**) between 9 a.m. and 5 p.m., Monday through Friday, except Federal holidays.

B. Regulatory History and Information

The TriRock San Diego Triathlon is an annual reoccurring event listed in 33 CFR 100.1101 (table 1, item 11) for Southern California annual marine events for the San Diego Captain of the Port Zone. Special local regulations exist for the marine event to allow for special use of the San Diego Bay waterway for one day. For 2015, the event is occurring on Sunday, September 20, 2015. This temporary interim rule is therefore necessary to ensure that the same measures normally provided are in place for that day.

The Coast Guard is issuing this temporary interim rule without prior notice and opportunity to comment pursuant to authority under section 4(a) of the Administrative Procedure Act (APA) (5 U.S.C. 553(b)). This provision authorizes an agency to issue a rule without prior notice and opportunity to comment when the agency for good cause finds that those procedures are ''impracticable, unnecessary, or contrary to the public interest.''

We did not publish a notice of proposed rulemaking (NPRM) for this regulation. Under 5 U.S.C. 553(b)(B), the Coast Guard finds that good cause exists for not publishing a NPRM because the Coast Guard did not have sufficient information about the event early enough to publish the NPRM and receive comments. The publishing of an NPRM would be impracticable since immediate action is needed to minimize potential danger to the participants and the public during the event. The danger posed by the large volume of weekend marine traffic in San Diego Bay makes special local regulations necessary to provide for the safety of participants, event support vessels, spectator craft and other vessels transiting the event area. For the safety concerns noted, it is important to have these regulations in effect during the event. The area covered by the special local regulation should have negligible impact on vessel movement. The Coast Guard will issue a broadcast notice to mariners (BNM) to advise vessel operators of navigational restrictions. In addition, the Coast Guard will also advertise notice of the event and event date changes via local notice to mariners (LNM) report.

For the same reasons, the Coast Guard finds that good cause exists for making this rule effective less than 30 days after publication in the **Federal Register**. Delaying the effective date would be contrary to the public interest, because immediate action is needed to ensure the safety of the event. However, notifications will be made to users of the affected area near San Diego Bay, San Diego, California via marine information broadcast and a local notice to mariners.

Furthermore, we are providing an opportunity for subsequent public comment and, should public comment show the need for modifications to the special local regulations during the 2015 event, we may make those modifications and will provide actual notice of those modifications to the affected public.

C. Basis and Purpose

The legal basis and authorities for this rule are found in 33 U.S.C. 1233, which authorize the Coast Guard to establish, and define special local regulations. The Captain of the Port San Diego is establishing a special local regulation for the waters of San Diego Bay, San Diego, California to protect event participants, spectators and transiting vessels. Entry into this area is prohibited unless specifically authorized by the Captain of the Port San Diego or designated representative.

D. Discussion of the Interim Rule

The TriRock San Diego Triathlon is an annual event normally held on a weekend day in September San Diego Bay, San Diego, California.

The regulation listing annual marine events within the San Diego Captain of the Port Zone and special local regulations is CFR 100.1101. Table 1 to § 100.1101 identifies special local regulations within the COTP San Diego Zone. Table 1 to § 100.1101 at item ''11'' describes the enforcement date and regulated location for this marine event.

The date listed in the Table has the marine event on a Saturday in September. However, this temporary rule changes the marine event date to Sunday, September 20, 2015 to reflect the actual date of the event.

The Coast Guard is establishing a temporary special local regulation for a marine event on San Diego Bay that will be effective from 6:30 a.m. to 10:30 a.m. on September 20, 2015 and will be enforced in that same timeframe.

The Coast Guard will temporarily suspend the regulation listed in Table 1 to § 100.1101 item ''11'', and insert this temporary regulation at Table 1 to § 100.1101, at item ''19''. This change is needed to accommodate the sponsor's event plan. No other portion of Table 1 to § 100.1101 or other provisions in § 100.1101 shall be affected by this regulation.

The special local regulations are necessary to provide for the safety of the crew, spectators, participants, and other vessels and users of the waterway for the swimming portion of this triathlon race that will consist of a 1,600 swimmers. Persons and vessels will be prohibited from entering into, transiting through, or anchoring within this regulated waterway unless authorized by the Coast Guard Captain of the Port (COTP), or his designated representative, during the proposed times. Before the effective period, the Coast Guard will publish information on the event in the weekly LNM.

E. Regulatory Analyses

We developed this rule after considering numerous statutes and executive orders related to rulemaking. Below we summarize our analyses based on these statutes and executive orders.

1. Regulatory Planning and Review

This rule is not a significant regulatory action under section 3(f) of Executive Order 12866, Regulatory Planning and Review, as supplemented by Executive Order 13563, Improving Regulation and Regulatory Review, and

does not require an assessment of potential costs and benefits under section 6(a)(3) of Executive Order 12866 or under section 1 of Executive Order 13563. The Office of Management and Budget has not reviewed it under those Orders. We expect the economic impact of this rule to be so minimal that a full Regulatory Evaluation is unnecessary. This determination is based on the size, location, and the limited duration of the marine event and associated special local regulations. Optional waterway routes exist to allow boaters to transit around the marine event area, without impacting the race. Additionally, to the maximum extent practicable, the event sponsor will assist with the movement of boaters desiring to transit the race area throughout the day.

2. Impact on Small Entities

The Regulatory Flexibility Act of 1980 (RFA), 5 U.S.C. 601–612, as amended, requires federal agencies to consider the potential impact of regulations on small entities during rulemaking. The term ''small entities'' comprises small businesses, not-for-profit organizations that are independently owned and operated and are not dominant in their fields, and governmental jurisdictions with populations of less than 50,000. The Coast Guard certifies under 5 U.S.C. 605(b) that this rule will not have a significant economic impact on a substantial number of small entities. This rule will affect the following entities, some of which may be small entities: The owners or operators of vessels intending to transit or anchor in the impacted portion of San Diego Bay, California from 6:30 a.m. to 10:30 a.m. on September 20, 2015.

This special local regulation will not have a significant economic impact on a substantial number of small entities for the following reasons. Although the special local regulations would apply to a portion of San Diego Bay, traffic would be allowed to pass around the zone or through the zone with the permission of the COTP, or his designated representative. The event sponsor, will also be advertising the event. Before the effective period, the Coast Guard will publish event information on the internet in the weekly LNM marine information report and will provide a BMM via marine radio during the event.

3. Assistance for Small Entities

Under section 213(a) of the Small Business Regulatory Enforcement Fairness Act of 1996 (Public Law 104–121), we want to assist small entities in understanding this rule. If the rule would affect your small business, organization, or governmental jurisdiction and you have questions concerning its provisions or options for compliance, please contact the person listed in the **FOR FURTHER INFORMATION CONTACT**, above.

Small businesses may send comments on the actions of Federal employees who enforce, or otherwise determine compliance with, Federal regulations to the Small Business and Agriculture Regulatory Enforcement Ombudsman and the Regional Small Business Regulatory Fairness Boards. The Ombudsman evaluates these actions annually and rates each agency's responsiveness to small business. If you wish to comment on actions by employees of the Coast Guard, call 1–888–REG–FAIR (1–888–734–3247). The Coast Guard will not retaliate against small entities that question or complain about this rule or any policy or action of the Coast Guard.

4. Collection of Information

This rule calls for no new collection of information under the Paperwork Reduction Act of 1995 (44 U.S.C. 3501–3520).

5. Federalism

A rule has implications for federalism under Executive Order 13132, Federalism, if it has a substantial direct effect on the States, on the relationship between the national government and the States, or on the distribution of power and responsibilities among the various levels of government. We have analyzed this rule under that Order and determined that this rule does not have implications for federalism.

6. Protest Activities

The Coast Guard respects the First Amendment rights of protesters. Protesters are asked to contact the person listed in the **FOR FURTHER INFORMATION CONTACT** section to coordinate protest activities so that your message can be received without jeopardizing the safety or security of people, places or vessels.

7. Unfunded Mandates Reform Act

The Unfunded Mandates Reform Act of 1995 (2 U.S.C. 1531–1538) requires Federal agencies to assess the effects of their discretionary regulatory actions. In particular, the Act addresses actions that may result in the expenditure by a State, local, or tribal government, in the aggregate, or by the private sector of $100,000,000 or more in any one year. Though this rule will not result in such an expenditure, we do discuss the effects of this rule elsewhere in this preamble.

8. Taking of Private Property

This rule will not cause a taking of private property or otherwise have taking implications under Executive Order 12630, Governmental Actions and Interference with Constitutionally Protected Property Rights.

9. Civil Justice Reform

This rule meets applicable standards in sections 3(a) and 3(b)(2) of Executive Order 12988, Civil Justice Reform, to minimize litigation, eliminate ambiguity, and reduce burden.

10. Protection of Children

We have analyzed this rule under Executive Order 13045, Protection of Children from Environmental Health Risks and Safety Risks. This rule is not an economically significant rule and does not create an environmental risk to health or risk to safety that may disproportionately affect children.

11. Indian Tribal Governments

This rule does not have tribal implications under Executive Order 13175, Consultation and Coordination with Indian Tribal Governments, because it does not have a substantial direct effect on one or more Indian tribes, on the relationship between the Federal Government and Indian tribes, or on the distribution of power and responsibilities between the Federal Government and Indian tribes.

12. Energy Effects

This action is not a ''significant energy action'' under Executive Order 13211, Actions Concerning Regulations That Significantly Affect Energy Supply, Distribution, or Use.

13. Technical Standards

This rule does not use technical standards. Therefore, we did not consider the use of voluntary consensus standards.

14. Environment

We have analyzed this rule under Department of Homeland Security Management Directive 023–01 and Commandant Instruction M16475.lD, which guide the Coast Guard in complying with the National Environmental Policy Act of 1969 (NEPA) (42 U.S.C. 4321–4370f), and have determined that this action is one of a category of actions that do not individually or cumulatively have a significant effect on the human environment. This rule involves establishment of marine event special local regulations on the navigable waters of Mission Bay. This rule is categorically excluded from further

review under paragraph 34(h) of Figure 2–1 of the Commandant Instruction. An environmental analysis checklist supporting this determination and a Categorical Exclusion Determination are available in the docket where indicated under **ADDRESSES**. We seek any comments or information that may lead to the discovery of a significant environmental impact from this rule.

List of Subjects in 33 CFR Part 100

Marine safety, Navigation (water), Reporting and recordkeeping requirements, and Waterways.

For the reasons discussed in the preamble, the Coast Guard amends 33 CFR part 100 as follows:

PART 100—SAFETY OF LIFE ON NAVIGABLE WATERS

■ 1. The authority citation for part 100 continues to read as follows:

Authority: 33 U.S.C. 1233.

■ 2. In § 100.1101, in Table 1 to § 100.1101, suspend item ''11'' and add temporary item ''19'' to read as follows:

§ 100.1101 Southern California Annual Marine Events for the San Diego Captain of the Port Zone.

* * * * *

TABLE 1 TO § 100.1101

[All coordinates referenced us datum NAD 83]

* * * * * * *

19. TriRock San Diego Triathlon

Sponsor	Competitor Group, Inc.
Event Description	Swim Race.
Date	September 20, 2015
Location	San Diego Bay, CA.
Regulated Area	The waters of San Diego Bay, off the East Basin of Embarcadero Park.

Dated: August 17, 2015.

J.S. Spaner,

Captain, U.S. Coast Guard, Captain of the Port San Diego.

[FR Doc. 2015–21791 Filed 9–1–15; 8:45 am]

BILLING CODE 9110–04–P

DEPARTMENT OF HOMELAND SECURITY

Coast Guard

33 CFR Part 100

[Docket Number USCG–2015–0663]

RIN 1625–AA08

Special Local Regulations for Marine Events, Wrightsville Channel; Wrightsville Beach, NC

AGENCY: Coast Guard, DHS.

ACTION: Temporary final rule.

SUMMARY: The Coast Guard is establishing a Special Local Regulation for the ''Swim the Loop'' and ''Motts Channel Sprint'' swim event, to be held on the waters adjacent to and surrounding Harbor Island in Wrightsville Beach, North Carolina. This Special Local Regulation is necessary to provide for the safety of life on navigable waters during the event. This action is intended to restrict vessel traffic on the Atlantic Intracoastal Waterway within 550 yards north and south of the U.S. 74/76 Bascule Bridge crossing the Atlantic Intracoastal Waterway, mile 283.1, at Wrightsville Beach, North Carolina, during the swim event.

DATES: This rule is effective on September 27, 2015 only.

This rule will be enforced from 7 a.m. to 10 a.m. on September 27, 2015.

ADDRESSES: Documents mentioned in this preamble are part of docket [USCG–2015–0663]. To view documents mentioned in this preamble as being available in the docket, go to *http://www.regulations.gov,* type the docket number in the ''SEARCH'' box and click ''SEARCH.'' Click on Open Docket Folder on the line associated with this rulemaking. You may also visit the Docket Management Facility in Room W12–140 on the ground floor of the Department of Transportation West Building, 1200 New Jersey Avenue SE., Washington, DC 20590, between 9 a.m. and 5 p.m., Monday through Friday, except Federal holidays.

FOR FURTHER INFORMATION CONTACT: If you have questions on this rule, call or email LT Derek J. Burrill, Coast Guard Sector North Carolina, Coast Guard; telephone (910) 772–2230, email *Derek.J.Burrill@uscg.mil.* If you have questions on viewing or submitting material to the docket, call Cheryl Collins, Program Manager, Docket Operations, telephone (202) 366–9826.

SUPPLEMENTARY INFORMATION:

Table of Acronyms

DHS Department of Homeland Security
FR **Federal Register**
NPRM Notice of Proposed Rulemaking

A. Regulatory History and Information

The Coast Guard is issuing this temporary final rule without prior notice and opportunity to comment pursuant to authority under section 4(a) of the Administrative Procedure Act (APA) (5 U.S.C. 553(b)). This provision authorizes an agency to issue a rule without prior notice and opportunity to comment when the agency for good cause finds that those procedures are ''impracticable, unnecessary, or contrary to the public interest.'' Under 5 U.S.C. 553(b)(B), the Coast Guard finds that good cause exists for not publishing a notice of proposed rulemaking (NPRM) with respect to this rule. The Coast Guard did not receive final information about this event with sufficient time to publish an NPRM and receive comments. Delaying the effective date to provide for a comment period would be contrary to the public interest, since immediate action is needed to ensure the safety of the event participants, patrol vessels, spectator craft and other vessels transiting the event area. The Coast Guard will provide advance notifications to users of the affected waterways of the safety zone via marine information broadcasts and local notice to mariners.

Under 5 U.S.C. 553(d)(3), the Coast Guard finds that good cause exists for making this rule effective less than 30 days after publication in the **Federal Register**. For the same reasons stated above, delaying the effective date to provide for a comment period is impracticable and would be contrary to the public interest.

B. Basis and Purpose

On September 27, 2015 from 7 a.m. to 10 a.m., Without Limits Coaching will sponsor ''Swim the Loop'' and ''Motts Channel Sprint'' on the waters adjacent to and surrounding Harbor Island in Wrightsville Beach, North Carolina. The swim event will consist of up to 200 swimmers per event swimming a 1.3 mile course or a 3.5 mile course around Harbor Island in Wrightsville Beach, North Carolina. To provide for the safety of participants, spectators and other transiting vessels, the Coast Guard will temporarily restrict vessel traffic in the event area during this event.

C. Discussion of Comments, Changes and the Final Rule

The Coast Guard is establishing a safety zone on the navigable waters of the Atlantic Intracoastal Waterway 550 yards north and south of the U.S. 74/76 Bascule Bridge, mile 283.1, latitude 34°13′06″ North, longitude 077°48′44″ West, at Wrightsville Beach, North Carolina.

To provide for the safety of participants, spectators and other transiting vessels, the Coast Guard will temporarily restrict vessel traffic in the event area during this event. Specifically, the U.S. 74/76 Bascule Bridge at Wrightsville Beach, North Carolina will remain closed during the event on September 27, 2015 from 7 a.m. to 10 a.m. During the event, general navigation within the safety zone will be restricted, no person or vessel may enter or remain in the regulated area, with the exception of participants and vessels authorized by the Coast Guard Captain of the Port or his representative.

D. Regulatory Analyses

We developed this rule after considering numerous statutes and executive orders related to rulemaking. Below we summarize our analyses based on these statutes and executive orders.

1. Regulatory Planning and Review

This rule is not a significant regulatory action under section 3(f) of Executive Order 12866, Regulatory Planning and Review, as supplemented by Executive Order 13563, Improving Regulation and Regulatory Review, and does not require an assessment of potential costs and benefits under section 6(a)(3) of Executive Order 12866 or under section 1 of Executive Order 13563. The Office of Management and Budget has not reviewed it under those Orders. Although this regulation will restrict access to the area, the effect of this rule will not be significant because the regulated area will be in effect for a limited time, from 7 a.m. to 10 a.m., on September 27, 2015. The Coast Guard will provide advance notification via maritime advisories so mariners can adjust their plans accordingly. The regulated area will apply only to the section of Atlantic Intracoastal Waterway in the immediate vicinity of U.S. 74/76 Bascule Bridge at Wrightsville Beach, North Carolina. Coast Guard vessels enforcing this regulated area can be contacted on marine band radio VHF–FM channel 16 (156.8 MHz).

2. Impact on Small Entities

The Regulatory Flexibility Act of 1980 (RFA), 5 U.S.C. 601–612, as amended, requires federal agencies to consider the potential impact of regulations on small entities during rulemaking. The term ''small entities'' comprises small businesses, not-for-profit organizations that are independently owned and operated and are not dominant in their fields, and governmental jurisdictions with populations of less than 50,000. The Coast Guard certifies under 5 U.S.C. 605(b) that this rule will not have a significant economic impact on a substantial number of small entities.

This rule will affect the following entities, some of which may be small entities: The owners or operators of recreational vessels intending to transit the specified portion of Atlantic Intracoastal Waterway from 7 a.m. to 10 a.m. on September 27, 2015.

This rule will not have a significant economic impact on a substantial number of small entities for the following reasons. This rule will only be in effect for three hours from 7 a.m. to 10 a.m. The regulated area applies only to the section of Atlantic Intracoastal Waterway in the vicinity of the U.S. 74/76 Bascule Bridge at Wrightsville Beach, North Carolina. Vessel traffic may be allowed to pass through the regulated area on a case by case basis with the permission of the Coast Guard Patrol Commander. In the case where the Patrol Commander authorizes passage through the regulated area, vessels shall proceed at the minimum speed necessary to maintain a safe course that minimizes wake near the swim course. The Patrol Commander will allow non-participating vessels to transit the event area once all swimmers are safely clear of navigation channels and vessel traffic areas. Before the enforcement period, we will issue maritime advisories so mariners can adjust their plans accordingly.

3. Assistance for Small Entities

Under section 213(a) of the Small Business Regulatory Enforcement Fairness Act of 1996 (Public Law 104–121), we want to assist small entities in understanding this rule. If the rule would affect your small business, organization, or governmental jurisdiction and you have questions concerning its provisions or options for compliance, please contact the person listed in the **FOR FURTHER INFORMATION CONTACT**, above.

Small businesses may send comments on the actions of Federal employees who enforce, or otherwise determine compliance with, Federal regulations to the Small Business and Agriculture Regulatory Enforcement Ombudsman and the Regional Small Business Regulatory Fairness Boards. The Ombudsman evaluates these actions annually and rates each agency's responsiveness to small business. If you wish to comment on actions by employees of the Coast Guard, call 1–888–REG–FAIR (1–888–734–3247). The Coast Guard will not retaliate against small entities that question or complain about this rule or any policy or action of the Coast Guard.

4. Collection of Information

This rule will not call for a new collection of information under the Paperwork Reduction Act of 1995 (44 U.S.C. 3501–3520).

5. Federalism

A rule has implications for federalism under Executive Order 13132, Federalism, if it has a substantial direct effect on the States, on the relationship between the national government and the States, or on the distribution of power and responsibilities among the various levels of government. We have analyzed this rule under that Order and determined that this rule does not have implications for federalism.

6. Protest Activities

The Coast Guard respects the First Amendment rights of protesters. Protesters are asked to contact the person listed in the **FOR FURTHER INFORMATION CONTACT** section to coordinate protest activities so that your message can be received without jeopardizing the safety or security of people, places or vessels.

7. Unfunded Mandates Reform Act

The Unfunded Mandates Reform Act of 1995 (2 U.S.C. 1531–1538) requires Federal agencies to assess the effects of their discretionary regulatory actions. In particular, the Act addresses actions that may result in the expenditure by a State, local, or tribal government, in the aggregate, or by the private sector of $100,000,000 (adjusted for inflation) or more in any one year. Though this rule will not result in such an expenditure, we do discuss the effects of this rule elsewhere in this preamble.

8. Taking of Private Property

This rule will not cause a taking of private property or otherwise have taking implications under Executive Order 12630, Governmental Actions and Interference with Constitutionally Protected Property Rights.

9. Civil Justice Reform

This rule meets applicable standards in sections 3(a) and 3(b)(2) of Executive Order 12988, Civil Justice Reform, to minimize litigation, eliminate ambiguity, and reduce burden.

10. Protection of Children

We have analyzed this rule under Executive Order 13045, Protection of Children from Environmental Health Risks and Safety Risks. This rule is not an economically significant rule and does not create an environmental risk to health or risk to safety that may disproportionately affect children.

11. Indian Tribal Governments

This rule does not have tribal implications under Executive Order 13175, Consultation and Coordination with Indian Tribal Governments, because it does not have a substantial direct effect on one or more Indian tribes, on the relationship between the Federal Government and Indian tribes, or on the distribution of power and responsibilities between the Federal Government and Indian tribes.

12. Energy Effects

This action is not a ''significant energy action'' under Executive Order 13211, Actions Concerning Regulations That Significantly Affect Energy Supply, Distribution, or Use.

13. Technical Standards

This rule does not use technical standards. Therefore, we did not consider the use of voluntary consensus standards.

14. Environment

We have analyzed this rule under Department of Homeland Security Management Directive 023–01 and Commandant Instruction M16475.lD, which guide the Coast Guard in complying with the National Environmental Policy Act of 1969 (NEPA)(42 U.S.C. 4321–4370f), and have determined that this action is one of a category of actions that do not individually or cumulatively have a significant effect on the human environment. This rule involves implementation of regulations within 33 CFR part 100 that apply to organized marine events on the navigable waters of the United States that may have potential for negative impact on the safety or other interest of waterway users and shore side activities in the event area. This special local regulation is necessary to provide for the safety of the general public and event participants from potential hazards associated with movement of vessels near the event area. This rule is categorically excluded from further review under paragraph 34(h) of Figure 2–1 of the Commandant Instruction. We seek any comments or information that may lead to the discovery of a significant environmental impact from this rule.

List of Subjects in 33 CFR Part 100

Marine safety, Navigation (water), Reporting and recordkeeping requirements, Waterways.

For the reasons discussed in the preamble, the Coast Guard proposes to amend 33 CFR part 100 as follows:

PART 100—SAFETY OF LIFE ON NAVIGABLE WATERS

■ 1. The authority citation for part 100 continues to read as follows:

Authority: 33 U.S.C. 1233.

■ 2. Add a temporary § 100.35–T05–0200 to read as follows:

§ 100.35–T05–0200 Special Local Regulations for Marine Events, Wrightsville Channel; Wrightsville Beach, NC

(a) *Regulated area.* The following location is a regulated area: All waters of the Atlantic Intracoastal Waterway within 550 yards north and south of the U.S. 74/76 Bascule Bridge, mile 283.1, latitude 34°13′06″ North, longitude 077°48′44″ West, at Wrightsville Beach, North Carolina. All coordinates reference Datum NAD 1983.

(b) *Definitions.* (1) *Coast Guard Patrol Commander* means a commissioned, warrant, or petty officer of the U.S. Coast Guard who has been designated by the Commander, Coast Guard Sector North Carolina.

(2) *Official Patrol* means any vessel assigned or approved by Commander, Coast Guard Sector North Carolina with a commissioned, warrant, or petty officer on board and displaying a Coast Guard ensign.

(3) *Participant* means all participating in the ''Swim the Loop'' and ''Motts Channel Sprint'' swim event under the auspices of the Marine Event Permit issued to the event sponsor and approved by Commander, Coast Guard Sector North Carolina.

(4) *Spectator* means all persons and vessels not registered with the event sponsor as participants or official patrol.

(c) *Special local regulations.* (1) The Coast Guard Patrol Commander will control the movement of all vessels in the vicinity of the regulated area. When hailed or signaled by an official patrol vessel, a vessel approaching the regulated area shall immediately comply with the directions given. Failure to do so may result in termination of voyage and citation for failure to comply.

(2) The Coast Guard Patrol Commander may terminate the event, or the operation of any support vessel participating in the event, at any time it is deemed necessary for the protection of life or property. The Coast Guard may be assisted in the patrol and enforcement of the regulated area by other Federal, State, and local agencies.

(3) Vessel traffic, not involved with the event, may be allowed to transit the regulated area with the permission of the Patrol Commander. Vessels that desire passage through the regulated area shall contact the Coast Guard Patrol Commander on VHF–FM marine band radio for direction. Only participants and official patrol vessels are allowed to enter the regulated area.

(4) All Coast Guard vessels enforcing the regulated area can be contacted on marine band radio VHF–FM channel 16 (156.8 MHz) and channel 22 (157.1 MHz). The Coast Guard will issue marine information broadcast on VHF–FM marine band radio announcing specific event date and times.

(d) *Enforcement period.* This section will be enforced from 7 a.m. to 10 a.m. on September 27, 2015.

Dated: August 10, 2015.

S.R. Murtagh,

Captain, U.S. Coast Guard, Captain of the Port.

[FR Doc. 2015–21792 Filed 9–1–15; 8:45 am]

BILLING CODE 9110–04–P

DEPARTMENT OF HOMELAND SECURITY

Coast Guard

33 CFR Part 100

[Docket No. USCG–2015–0813]

Annual Marine Events in the Eighth Coast Guard District, Sabine River; Orange, TX

AGENCY: Coast Guard, DHS.

ACTION: Notice of enforcement of regulation.

SUMMARY: The Coast Guard will enforce Special Local Regulations for the Southern Professional Outboard Racing Tour (S.P.O.R.T.) boat races to be held on the Sabine River in Orange, TX from 3 p.m. on September 18, 2015, through 6 p.m. on September 20, 2015. This action is necessary to provide for the safety of the participants, crew, spectators, participating vessels, non-participating vessels and other users of the waterway. During the enforcement period, the Coast Guard Patrol Commander will enforce restrictions upon, and control the movement of, vessels in the zone established by the Special Local Regulation.

DATES: The regulation in 33 CFR 100.801 will be enforced from 3 p.m. to 6 p.m. on September 18, 2015; and from 9 a.m. to 6 p.m. on September 19 and 20, 2015.

FOR FURTHER INFORMATION CONTACT: If you have questions on this notice of enforcement, call or email Mr. Scott Whalen. U.S. Coast Guard Marine Safety Unit Port Arthur, TX; telephone 409–719–5086, email *scott.k.whalen@uscg.mil.*

SUPPLEMENTARY INFORMATION: The Coast Guard will enforce Special Local Regulation for the annual S.P.O.R.T. boat races in 33 CFR 100.801 (Table 3, Line 5) on September 18, 2015, from 3 p.m. to 6 p.m. and on September 19 and 20, 2015, from 9 a.m. to 6 p.m.

This Special Local Regulation encompasses all waters of the Sabine River south of latitude 30°05′33″ N. and waters north of latitude 30°05′45″ N. (NAD 83).

Under the provisions of 33 CFR 100.801, a vessel may not enter the regulated area, unless it receives permission from the on-scene Patrol Commander. Spectator vessels may safely transit outside the regulated area but may not anchor, block, loiter, or impede participants or official patrol vessels. The Coast Guard may be assisted by other federal, state or local law enforcement agencies in enforcing this regulation.

This notice is issued under authority of 33 CFR 100.801 and 33 U.S.C. 1233. In addition to this notice in the **Federal Register**, the Coast Guard will provide the maritime community with notification of this enforcement period via Local Notice to Mariners, Marine Information Broadcasts, and Marine Safety Information Bulletins.

If the Captain of the Port or his designated on-scene Patrol Commander determines that the regulated area need not be enforced for the full duration stated in this notice, he or she may use a Broadcast Notice to Mariners to grant general permission to enter the regulated area.

Dated: August 18, 2015.

R.S. Ogrydziak,

Captain, U.S. Coast Guard, Captain of the Port, Port Arthur.

[FR Doc. 2015–21772 Filed 9–1–15; 8:45 am]

BILLING CODE 9110–04–P

DEPARTMENT OF HOMELAND SECURITY

Coast Guard

33 CFR Part 117

[Docket Number USCG–2015–0739]

Drawbridge Operation Regulation; Upper Mississippi River, Rock Island, IL

AGENCY: Coast Guard, DHS.

ACTION: Notice of deviation from drawbridge regulation.

SUMMARY: The Coast Guard has issued a temporary deviation from the operating schedule that governs the Rock Island Railroad and Highway Drawbridge across the Upper Mississippi River, mile 482.9, at Rock Island, Illinois. The deviation is necessary to allow the Quad City Marathon to cross the bridge. This deviation allows the bridge to be maintained in the closed-to-navigation position for four and a half hours.

DATES: This deviation is effective from 7:00 a.m. to 11:30 a.m. on September 27, 2015.

ADDRESSES: The docket for this deviation, [USCG–2015–0739] is available at *http://www.regulations.gov.* Type the docket number in the ''SEARCH'' box and click ''SEARCH.'' Click on Open Docket Folder on the line associated with this deviation. You may also visit the Docket Management Facility in Room W12–140 on the ground floor of the Department of Transportation West Building, 1200 New Jersey Avenue SE., Washington, DC 20590, between 9 a.m. and 5 p.m., Monday through Friday, except Federal holidays.

FOR FURTHER INFORMATION CONTACT: If you have questions on this temporary deviation, call or email Eric A. Washburn, Bridge Administrator, Western Rivers, Coast Guard; telephone 314–269–2378, email *Eric.Washburn@uscg.mil.* If you have questions on viewing the docket, call Cheryl F. Collins, Program Manager, Docket Operations, telephone 202–366–9826.

SUPPLEMENTARY INFORMATION: The U.S. Army Rock Island Arsenal requested a temporary deviation for the Rock Island Railroad and Highway Drawbridge, across the Upper Mississippi River, mile 482.9, at Rock Island, Illinois to remain in the closed-to-navigation position for a four and a half hour period from 7:00 a.m. to 11:30 a.m., September 27, 2015, while the Quad City Marathon is held between the cities of Davenport, IA and Rock Island, IL.

The Rock Island Railroad and Highway Drawbridge currently operates in accordance with 33 CFR 117.5, which states the general requirement that drawbridges shall open promptly and fully for the passage of vessels when a request to open is given in accordance with the subpart.

There are no alternate routes for vessels transiting this section of the Upper Mississippi River.

The Rock Island Railroad and Highway Drawbridge, in the closed-to-navigation position, provides a vertical clearance of 23.8 feet above normal pool. Navigation on the waterway consists primarily of commercial tows and recreational watercraft. This temporary deviation has been coordinated with waterway users. No objections were received.

In accordance with 33 CFR 117.35(e), the drawbridge must return to its regular operating schedule immediately at the end of the effective period of this temporary deviation. This deviation from the operating regulations is authorized under 33 CFR 117.35.

Dated: August 27, 2015.

David M. Frank,

Bridge Administrator, Eighth Coast Guard District.

[FR Doc. 2015–21707 Filed 9–1–15; 8:45 am]

BILLING CODE 9110–04–P

DEPARTMENT OF HOMELAND SECURITY

Coast Guard

33 CFR Part 117

[Docket No. USCG–2015–0806]

Drawbridge Operation Regulation; English Kills, Brooklyn, NY

AGENCY: Coast Guard, DHS.

ACTION: Notice of deviation from drawbridge regulation.

SUMMARY: The Coast Guard has issued a temporary deviation from the operating schedule that governs the Metropolitan Ave. Bridge, across the English Kills, mile 3.4, at Brooklyn, New York. This deviation is necessary to remove lead based paint in the bridge control house electrical room. This deviation allows the bridge to remain in the closed position for 3 days.

DATES: This deviation is effective from 12:01 a.m. on September 10, 2015 through 11:59 p.m. on September 12, 2015.

ADDRESSES: The docket for this deviation, [USCG–2015–0806] is available at *http://www.regulations.gov.* Type the docket number in the ''SEARCH'' box and click ''SEARCH.'' Click on Open Docket Folder on the line associated with this deviation. You may also visit the Docket Management Facility in Room W12–140, on the ground floor of the Department of Transportation West Building, 1200 New Jersey Avenue SE., Washington, DC 20590, between 9 a.m. and 5 p.m., Monday through Friday, except Federal holidays.

FOR FURTHER INFORMATION CONTACT: If you have questions on this temporary deviation, contact Ms. Judy K. Leung-Yee, Project Officer, First Coast Guard District, telephone (212) 514–4330, email *judy.k.leung-yee@uscg.mil.* If you have questions on viewing the docket, call Ms. Cheryl Collins, Program Manager, Docket Operations, telephone (202) 366–9826.

SUPPLEMENTARY INFORMATION: The Metropolitan Ave. Bridge, mile 3.4, across the English Kills has a vertical clearance in the closed position of 10 feet at mean high water and 15 feet at mean low water. The existing bridge operating regulations are found at 33 CFR 117.801(e).

The waterway has one commercial facility located upstream of the bridge.

New York City DOT requested this temporary deviation from the normal operating schedule to facilitate essential maintenance repairs.

Under this temporary deviation, the Metropolitan Ave. Bridge may remain in the closed position from 12:01 a.m. on September 10, 2015 through 11:59 p.m. on September 12, 2015.

The bridge will not be able to open in the event of an emergency. There is no alternate route for vessel traffic; however, vessels that can pass under the closed draws during this closure may do so at any time.

The Coast Guard will inform the users of the waterway through our Local and Broadcast Notice to Mariners of the change in operating schedule for the bridge so that vessels can arrange their transits to minimize any impact caused by the temporary deviation.

In accordance with 33 CFR 117.35(e), the drawbridge must return to its regular operating schedule immediately at the end of the effective period of this temporary deviation. This deviation from the operating regulations is authorized under 33 CFR 117.35.

Dated: August 27, 2015.

C.J. Bisignano,

Supervisory Bridge Management Specialist, First Coast Guard District.

[FR Doc. 2015–21648 Filed 9–1–15; 8:45 am]

BILLING CODE 9110–04–P

ENVIRONMENTAL PROTECTION AGENCY

40 CFR Parts 9 and 721

[EPA–HQ–OPPT–2015–0220; FRL–9932–56]

RIN 2070–AB27

Significant New Use Rule on Substituted Cyclosiloxane; Removal

AGENCY: Environmental Protection Agency (EPA).

ACTION: Final rule.

SUMMARY: EPA is removing a significant new use rule (SNUR) promulgated under the Toxic Substances Control Act (TSCA) for substituted cyclosiloxane that was the subject of a premanufacture notice (PMN). EPA published this SNUR using direct final rulemaking procedures. EPA received a notice of intent to submit adverse comments on this rule. Therefore, the Agency is removing this SNUR. EPA intends to publish a proposed SNUR for this chemical substance under separate notice and comment procedures.

DATES: This final rule is effective September 2, 2015.

ADDRESSES: The docket for this action, identified by docket identification (ID) number EPA–HQ–OPPT–2015–0220, is available at *http://www.regulations.gov* or at the Office of Pollution Prevention and Toxics Docket (OPPT Docket), Environmental Protection Agency Docket Center (EPA/DC), West William Jefferson Clinton Bldg., Rm. 3334, 1301 Constitution Ave. NW., Washington, DC. The Public Reading Room is open from 8:30 a.m. to 4:30 p.m., Monday through Friday, excluding legal holidays. The telephone number for the Public Reading Room is (202) 566–1744, and the telephone number for the OPPT Docket is (202) 566–0280. Please review the visitor instructions and additional information about the docket available at *http://www.epa.gov/dockets.*

FOR FURTHER INFORMATION CONTACT: *For technical information contact:* Kenneth Moss, Chemical Control Division (7405M), Office of Pollution Prevention and Toxics, Environmental Protection Agency, 1200 Pennsylvania Ave. NW., Washington, DC 20460–0001; telephone number: (202) 564–9232; email address: *moss.kenneth@epa.gov.*

For general information contact: The TSCA-Hotline, ABVI-Goodwill, 422 South Clinton Ave., Rochester, NY 14620; telephone number: (202) 554–1404; email address: *TSCA-Hotline@epa.gov.*

SUPPLEMENTARY INFORMATION:

I. Does this action apply to me?

A list of potentially affected entities is provided in the **Federal Register** of June 5, 2015 (80 FR 32003) (FRL–9927–67). If you have questions regarding the applicability of this action to a particular entity, consult the technical person listed under **FOR FURTHER INFORMATION CONTACT**.

II. What SNUR is being removed?

In the June 5, 2015 **Federal Register**, EPA issued a direct final SNUR for the chemical substance that is identified in this final rule. This direct final SNUR was issued pursuant to the procedures in 40 CFR part 721, subpart D. EPA is removing the direct final SNUR issued for the chemical substance identified generically as substituted cyclosiloxane, which was the subject of PMN P–14–605.

This direct final rule was issued pursuant to the procedures in 40 CFR part 721, subpart D. Section 721.170(d)(4)(i)(B) provides that EPA will withdraw the relevant portion of such a direct final rule if within 30 days of publication the Agency receives a notice of intent to submit adverse comments on the SNUR. EPA received a notice of intent to submit adverse comments on the SNUR, but mistakenly did not withdraw the direct final rule as required by § 721.170(d)(4)(i)(B). The

Agency is therefore removing the rule issued for the chemical substance that was the subject of PMN P–14–605. EPA intends to publish a proposed SNUR for this chemical substance under separate notice and comment procedures.

For further information regarding EPA's direct rulemaking process for issuing SNURs, see 40 CFR part 721, subpart D, and the **Federal Register** of July 27, 1989 (54 FR 31314).

III. Good Cause Finding

EPA determined that there is good cause to first; promulgate this final rule without opportunity for notice and comment in accordance with section 553(b)(B) of the Administrative Procedure Act (APA), and second; make the rule effective on the date of publication in accordance with section 553(d) of the APA. Good cause exists because the direct final rule was allowed to become effective in violation of § 721.170(d)(4)(i)(B).

IV. Statutory and Executive Order Reviews

This action removes regulatory requirements that were not intended to go into effect. As such, the Agency has determined that this removal will not have any adverse impacts, economic or otherwise. The statutory and Executive Order review requirements applicable to this action were discussed in the June 5, 2015 **Federal Register**. Those review requirements do not apply to this action because it is a removal and does not contain any new or amended requirements.

V. Congressional Review Act (CRA)

Pursuant to the Congressional Review Act (5 U.S.C. 801 *et seq.*), EPA will submit a report containing this rule and other required information to the U.S. Senate, the U.S. House of Representatives, and the Comptroller General of the United States prior to publication of the rule in the **Federal Register**. This action is not a ''major rule'' as defined by 5 U.S.C. 804(2). Section 808 of the CRA allows the issuing agency to make a rule effective sooner than otherwise provided by CRA if the agency makes a good cause finding that notice and public procedure is impracticable, unnecessary, or contrary to the public interest. As required by 5 U.S.C. 808(2), this determination is supported by a brief statement in Unit III.

List of Subjects

40 CFR Part 9

Environmental protection, Reporting and recordkeeping requirements.

40 CFR Part 721

Environmental protection, Chemicals, Hazardous substances, Reporting and recordkeeping requirements.

Dated: August 20, 2015.

Maria J. Doa,

Director, Chemical Control Division, Office of Pollution Prevention and Toxics.

Therefore, 40 CFR chapter I is amended as follows:

PART 9—[AMENDED]

■ 1. The authority citation for part 9 continues to read as follows:

Authority: 7 U.S.C. 135 *et seq.,* 136–136y; 15 U.S.C. 2001, 2003, 2005, 2006, 2601–2671; 21 U.S.C. 331j, 346a, 348; 31 U.S.C. 9701; 33 U.S.C. 1251 *et seq.,* 1311, 1313d, 1314, 1318, 1321, 1326, 1330, 1342, 1344, 1345(d) and (e), 1361; E.O. 11735, 38 FR 21243, 3 CFR, 1971–1975 Comp. p. 973; 42 U.S.C. 241, 242b, 243, 246, 300f, 300g, 300g–1, 300g–2, 300g–3, 300g–4, 300g–5, 300g–6, 300j–1, 300j–2, 300j–3, 300j–4, 300j–9, 1857 *et seq.,* 6901–6992k, 7401–671q, 7542, 9601–9657, 11023, 11048.

§ 9.1 [Amended]

■ 2. In the table in § 9.1, under the undesignated center heading ''Significant New Uses of Chemical Substances,'' remove § 721.10842.

PART 721—[AMENDED]

■ 3. The authority citation for part 721 continues to read as follows:

Authority: 15 U.S.C. 2604, 2607, and 2625(c).

§ 721.10842 [Removed]

■ 4. Remove § 721.10842.

[FR Doc. 2015–21800 Filed 9–1–15; 8:45 am]

BILLING CODE 6560–50–P

ENVIRONMENTAL PROTECTION AGENCY

40 CFR Part 52

[EPA–R09–OAR–2014–0256; FRL–9927–14–Region 9]

Approval and Promulgation of Implementation Plans; Arizona; Phased Discontinuation of Stage II Vapor Recovery Program

AGENCY: Environmental Protection Agency (EPA).

ACTION: Direct final rule.

SUMMARY: The Environmental Protection Agency (EPA) is taking direct final action to approve a state implementation plan (SIP) revision from the Arizona Department of Environmental Quality related to the removal of ''Stage II'' vapor recovery equipment at gasoline dispensing facilities in the Phoenix-Mesa area. Specifically, the EPA is approving a SIP revision that eliminates the requirement to install and operate such equipment at new gasoline dispensing facilities, and that provides for the phased removal of such equipment at existing gasoline dispensing facilities from October 2016 through September 2018. The EPA has previously determined that onboard refueling vapor recovery is in widespread use nationally and waived the stage II vapor recovery requirement. The EPA is approving this SIP revision because the resultant short-term incremental increase in emissions would not interfere with attainment or maintenance of the national ambient air quality standards or any other requirement of the Clean Air Act and because it would avoid longer-term increases in emissions from the continued operation of stage II vapor recovery equipment at gasoline dispensing facilities in the Phoenix-Mesa area.

DATES: This direct final rule is effective on November 2, 2015 unless the EPA receives adverse comments by October 2, 2015. If adverse comments are received, the EPA will publish a timely withdrawal of the direct final rule in the **Federal Register** informing the public that the rule will not take effect.

ADDRESSES: Submit your comments, identified by Docket No. EPA–R09–OAR–2014–0256, by one of the following methods:

1. *Federal Rulemaking Portal: http://www.regulations.gov.* Follow the on-line instructions for submitting comments.
2. *Email:* Jeffrey Buss at *buss.jeffrey@epa.gov.*
3. *Fax:* Jeffrey Buss, Air Planning Office (AIR–2), at fax number 415–947–3579.
4. *Mail:* Jeffrey Buss, Air Planning Office (AIR–2), U.S. Environmental Protection Agency, Region IX, 75 Hawthorne, San Francisco, California 94105.
5. *Hand or Courier Delivery:* Jeffrey Buss, Air Planning Section (AIR–2), U.S. Environmental Protection Agency, Region IX, 75 Hawthorne, San Francisco, California 94105. Such deliveries are only accepted during the Regional Office's normal hours of operation. Special arrangements should be made for deliveries of boxed information.

Instructions: Direct your comments to Docket ID No. EPA–R09–OAR–2014–0256. EPA's policy is that all comments received will be included in the public docket without change and may be

made available online at *www.regulations.gov*, including any personal information provided, unless the comment includes information claimed to be Confidential Business Information (CBI) or other information the disclosure of which is restricted by statute. Do not submit information through *www.regulations.gov* or email that you consider to be CBI or otherwise protected from disclosure. The *www.regulations.gov* Web site is an anonymous access system, which means the EPA will not know your identity or contact information unless you provide it in the body of your comment. If you send an email comment directly to the EPA without going through *www.regulations.gov*, your email address will be automatically captured and included as part of the comment that is placed in the public docket and made available on the Internet. If you submit an electronic comment, the EPA recommends that you include your name and other contact information in the body of your comment and with any disk or CD–ROM you submit. If the EPA cannot read your comment due to technical difficulties and cannot contact you for clarification, the EPA may not be able to consider your comment. Electronic files should avoid the use of special characters, any form of encryption, and be free of any defects or viruses.

Docket: All documents in the docket are listed in the *www.regulations.gov* index. Although listed in the index, some information is not publicly available, *e.g.*, CBI or other information whose disclosure is restricted by statute. Certain other material, such as copyrighted material, will be publicly available only in hard copy. Publicly available docket materials are available either electronically in *www.regulations.gov* or in hard copy at the Air Planning Office (AIR–2), U.S. Environmental Protection Agency, Region IX, 75 Hawthorne Street, San Francisco, California 94105. The EPA requests that if at all possible, you contact the person listed in the **FOR FURTHER INFORMATION CONTACT** section to schedule your inspection during normal business hours.

FOR FURTHER INFORMATION CONTACT:

Jeffrey Buss, Office of Air Planning, U.S. Environmental Protection Agency, Region 9, (415) 947–4152, email: *buss.jeffrey@epa.gov.*

SUPPLEMENTARY INFORMATION:

Throughout this document, the terms ''we'', ''us'', and ''our'' refer to the EPA.

Table of Contents

I. Background
II. State Submittal
III. Analysis of the State Submittal
A. SIP Revision Procedural Requirements
B. SIP Revision Substantive Requirements
IV. The EPA's Action and Request for Public Comment
V. Incorporation by reference
VI. Statutory and Executive Order Reviews

I. Background

Under the Clean Air Act (CAA or ''Act''), the EPA has promulgated national ambient air quality standards (NAAQS or ''standards'') for certain pervasive air pollutants. The NAAQS are concentration levels the attainment and maintenance of which EPA has determined to be requisite to protect public health (*i.e.*, the ''primary'' NAAQS) and welfare (*i.e.*, the ''secondary'' NAAQS). Under the CAA, states are required to develop and submit plans, referred to as state implementation plans (SIPs) to implement, maintain, and enforce the NAAQS.[1] Ozone is one of the air pollutants for which the EPA has established NAAQS.[2] The original NAAQS for ozone, established by the EPA in 1979, was 0.12 parts per million (ppm), 1-hour average (''1-hour ozone standard'').[3]

Under the CAA, the EPA is also responsible for designating areas of the country as attainment, nonattainment, or unclassifiable for the various NAAQS. States with ''nonattainment'' areas are required to submit revisions to their SIPs that include a control strategy necessary to demonstrate how the area will attain the NAAQS.

Under the CAA Amendments of 1990, the ''Phoenix metropolitan area,'' defined by the Maricopa Association of Governments' (MAGs') urban planning area boundary (but later revised to exclude the Gila River Indian Community at 70 FR 68339 (November 10, 2005)), was classified as a ''Moderate'' nonattainment area, 56 FR 56694 (November 6, 1991), and later reclassified as a ''Serious'' nonattainment area, 62 FR 60001 (November 6, 1997), for the 1-hour ozone standard.

States with ''Serious,'' ''Severe,'' or ''Extreme'' ozone nonattainment areas were required under CAA section 182(b)(3) to submit SIP revisions that require the use of ''Stage II'' vapor recovery systems at gasoline dispensing facilities (GDFs) located within the nonattainment area. Gasoline dispensing pump vapor control devices, commonly referred to as ''Stage II'' vapor recovery, are systems that control VOC vapor releases during the refueling of motor vehicles. This process takes the vapors normally emitted directly into the atmosphere when pumping gas and recycles them back into the underground fuel storage tank, preventing them from polluting the air.

In response to this requirement, the State of Arizona promulgated and submitted certain statutes and regulations that require use of Stage II vapor recovery systems in the Phoenix metropolitan area, and later extended the requirements to a larger geographic area referred to as ''Area A.''[4] The EPA approved the state's Stage-II-related statutes and regulations as a revision to the Arizona SIP. See 59 FR 54521 (November 1, 1994) and 77 FR 35279 (June 13, 2012).

The 1990 amended CAA anticipates that, over time, Stage II vapor recovery requirements at GDFs would be replaced by ''onboard refueling vapor recovery'' (ORVR) systems that the EPA was to establish for new motor vehicles under CAA section 202(a)(6). ORVR consists of an activated carbon canister installed in a motor vehicle. The carbon canister captures gasoline vapors during refueling. There the vapors are captured by the activated carbon in the canister. When the engine is started, the vapors are drawn off of the activated carbon and into the engine where they are burned as fuel. In 1994, the EPA promulgated its ORVR standards,[5] with a minimum 95% vapor capture efficiency, which fully applied to all new light duty vehicles by 2000. The ORVR requirements were phased in to apply to heavier classes of vehicles as well—reaching full effect for all new vehicles with a gross vehicle weight rating of up to 10,000 pounds by 2006. Recognizing that, over time, the number

[1] Under Arizona law, the Arizona Department of Environmental Quality (ADEQ) is responsible for adopting and submitting the Arizona SIP and SIP revisions. Within the Maricopa County portion of the Phoenix-Mesa area, the Maricopa Association of Governments (MAG) is responsible for developing regional ozone air quality plans.

[2] Ground-level ozone is an oxidant that is formed from photochemical reactions in the atmosphere between volatile organic compounds (VOC) and oxides of nitrogen (NO_X) in the presence of sunlight. These two pollutants, referred to as ozone precursors, are emitted by many types of pollution sources including on-road motor vehicles (cars, trucks, and buses), nonroad vehicles and engines, power plants and industrial facilities, and smaller area sources such as lawn and garden equipment and paints.

[3] See 44 FR 8202 (February 8, 1979).

[4] ''Area A'' is defined in Arizona Revised Statutes (ARS) section 49–541, and it includes all of the Phoenix metropolitan 1-hour ozone nonattainment area plus additional areas in Maricopa County to the north, east, and west, as well as small portions of Yavapai County and Pinal County. Area A roughly approximates the boundaries of the Phoenix-Mesa area designated by the EPA for the 1997 8-hour ozone standard.

[5] See 59 FR 16262 (April 6, 1994).

of vehicles with ORVR as a percentage of the overall motor vehicle fleet would increase with the turnover of older models not equipped with ORVR with newer models equipped with ORVR, CAA section 202(a)(6) also permits the EPA to promulgate a determination that ORVR is in ''widespread use'' throughout the motor vehicle fleet and to revise or waive Stage II vapor recovery requirements for Serious, Severe and Extreme ozone nonattainment areas.

Meanwhile, the EPA has taken certain actions that affect SIP planning in general, and the Phoenix metropolitan area and Stage II vapor recovery SIP requirements in particular, including the following:

- Revision of the NAAQS for ozone, setting it at 0.08 ppm averaged over an 8-hour timeframe (referred to herein as the ''1997 8-hour ozone standard'') (62 FR 33856, July 18, 1997), and designation of the Phoenix-Mesa area [6] as a ''Marginal'' nonattainment area (69 FR 23857, April 30, 2004; 77 FR 28424, May 14, 2012);
- Redesignation of the Phoenix metropolitan area from nonattainment to attainment for the 1-hour ozone standard (70 FR 34362; June 14, 2005), and revocation of the 1-hour ozone standard, effective June 15, 2005 (40 CFR 50.9(b));
- Revision of the 8-hour ozone standard down to 0.075 ppm (the 2008 8-hour ozone standard) (73 FR 16436, March 27, 2008), and designation of the Phoenix-Mesa area as a ''Marginal'' nonattainment area for the 2008 8-hour ozone standard (77 FR 30088, May 21, 2012); [7]
- Determination that ORVR systems are in ''widespread use'' in the nation's motor vehicle fleet (77 FR 28772, May 16, 2012; and 40 CFR 51.126); and
- Redesignation of the Phoenix-Mesa ozone area from nonattainment to attainment for the 1997 8-hour ozone standard (79 FR 55645, September 17, 2014).

In the wake of the EPA's ''widespread use'' determination, states, such as Arizona, that were required to implement Stage II vapor recovery programs under CAA section 182(b)(3) are now permitted to remove the requirement from their SIPs under certain circumstances. On August 7, 2012, the EPA released its ''Guidance on Removing Stage II Gasoline Vapor Control Programs from State Implementation Plans and Assessing Comparable Measures'' [8] (''Stage II Guidance'') to aid in the development of SIP revisions to remove Stage II controls from GDFs. The Stage II Guidance also provides a series of equations to determine the emissions impacts of removing Stage II controls.

In summary, the State of Arizona established Stage II vapor recovery requirements in the Phoenix metropolitan area to address CAA requirements for ''Serious'' nonattainment areas for the 1-hour ozone standard and later extended the requirements to a larger geographic area known as Area A that roughly approximates the boundaries of the Phoenix-Mesa 1997 8-hour ozone area. The Phoenix metropolitan area has been redesignated to attainment for the 1-hour ozone standard, and the Phoenix-Mesa area has been redesignated to attainment for the 1997 8-hour ozone standard, but the Phoenix-Mesa area remains designated ''Marginal'' nonattainment for the 2008 8-hour ozone standard. Under 40 CFR 51.126, Stage II vapor recovery is no longer a SIP requirement in ozone nonattainment areas, and existing SIP provisions establishing Stage II vapor recovery requirements may be rescinded under certain circumstances. In this action, and for the reasons set forth in the following section of this document, the EPA is approving the State of Arizona's revisions to its SIP that eliminate Stage II requirements for new GDFs and that provide for the phased removal of Stage II vapor recovery equipment at existing GDFs within the geographic area referred to as ''Area A,'' which roughly approximates the boundaries of the Phoenix-Mesa area for the 1997 8-hour ozone standard.

II. State Submittal

On September 2, 2014, ADEQ submitted a SIP revision to phase-out Stage II vapor recovery requirements in Area A by eliminating the requirement to install Stage II equipment at new GDFs and by providing for a phased decommissioning process to remove Stage II equipment at existing GDFs beginning in October 2016 and ending in September 2018. The SIP submittal includes the SIP revision itself, ''MAG State Implementation Plan Revision for the Removal of Stage II Vapor Recovery Controls in the Maricopa Eight-Hour Ozone Nonattainment Area'' (''Stage II Vapor Recovery SIP Revision'' or ''SIP Revision''), as well as supporting materials related to legal authority and completeness. The Stage II Vapor Recovery SIP Revision includes nonregulatory materials, such as a narrative and supporting technical analysis, and includes a law (House Bill 2128) passed by the Arizona Legislature and signed by the Governor providing for the phase-out of the Stage II vapor recovery requirements.

Effective for State law purposes upon the Governor's signature (*i.e.*, on April 22, 2014), HB 2128 (in relevant part) amends Arizona Revised Statutes (ARS) sections 41–2131 (''Definitions''), 41–2132 (''Stage I vapor recovery systems''), 41–2133 (''Compliance schedules''), and adds new section 41–2135 (''Stage II vapor recovery systems''). The new section ARS 41–2135 retains the existing Stage II control requirements for existing GDFs and establishes a phased decommissioning process to remove Stage II controls beginning October 1, 2016 and ending September 30, 2018.

The two-year period for decommissioning is based on the expectation of the Arizona Department of Weights and Measures (ADWM) of the time necessary to safely decommission Stage II controls at the over 1,000 existing GDFs in Area A. Decommissioning is expected to be spread evenly over each of the 24 months from October 2016 through September 2018 and to occur for existing GDFs during the month when the annual scheduled Stage II controls test would have occurred. HB 2128 repeals the new section 41–2135 on September 30, 2018 coinciding with the completion of the Stage II decommissioning process. To address the potential for adverse impacts relative to attainment and maintenance of the NAAQS, the SIP submittal includes a year-by-year analysis of the changes in VOC emissions taking into account both the elimination of Stage II controls at new GDFs and the phase-out of Stage II controls at existing GDFs from October 2016 through September 2018.

[6] The Phoenix-Mesa 1997 8-hour ozone nonattainment area covers a much larger portion of Maricopa County than the Phoenix metropolitan 1-hour ozone area and also includes the Apache Junction portion of Pinal County. The precise boundaries of the Phoenix-Mesa 1997 8-hour ozone nonattainment area and the Phoenix metropolitan 1-hour ozone nonattainment are found in 40 CFR 81.303.

[7] The nonattainment area for the 2008 8-hour ozone standard was expanded slightly to the south and west in Maricopa County as compared to the boundary established for the 1997 8-hour ozone standard. See 40 CFR 81.303 for the exact boundaries of the Phoenix-Mesa 2008 8-hour ozone nonattainment area. For both 8-hour ozone standards, the nonattainment area is referred to as the ''Phoenix-Mesa'' area. The applicable attainment date for areas initially classified as ''Marginal'' nonattainment areas for the 2008 8-hour ozone standard is July 20, 2015.

[8] ''Guidance on Removing Stage II Gasoline Vapor Control Programs from State Implementation Plans and Assessing Comparable Measures,'' EPA Office of Air Quality Planning and Standards, August 7, 2012.

III. Analysis of the State Submittal

A. SIP Revision Procedural Requirements

CAA sections 110(a)(1), 110(a)(2), and 110(l) require a state to provide reasonable public notice and opportunity for public hearing prior to the adoption and submittal of a SIP or SIP revision. To meet this requirement, every SIP submittal should include evidence that adequate public notice was given and a public hearing (if requested) was held consistent with EPA's implementing regulations in 40 CFR 51.102.

Appendix B of the Stage II Vapor Recovery SIP Revision documents the public process followed by MAG and ADEQ in developing, adopting, and submitting this SIP revision. Specifically, on May 2 and 3, 2014, ADEQ and MAG published a notice, in a newspaper of general circulation in the Phoenix area, of a joint public hearing to be held on June 3, 2014 and the availability of the draft version of the Stage II vapor recovery SIP revision for public review and comment. ADEQ and MAG conducted the public hearing on June 3, 2014. ADEQ and MAG received no comments on the draft SIP revision. On August 27, 2014, MAG's Regional Council adopted the Stage II Vapor Recovery SIP Revision. ADEQ subsequently adopted and submitted the SIP revision to EPA by letter dated September 2, 2104. As such, ADEQ and MAG have satisfied applicable statutory and regulatory procedural requirements for adoption and submittal of this SIP revision.

B. SIP Revision Substantive Requirements

As discussed above, pursuant to the EPA's determination of ''widespread use'' (of ORVR systems in the motor vehicle fleet), Stage II vapor recovery controls are no longer a SIP requirement, and thus, states are allowed to rescind such control requirements in their SIPs if doing so is consistent with the general SIP revision requirements of CAA section 110(l) and section 193. In relevant part, CAA section 110(l) prohibits the EPA from approving a SIP revision if that revision would interfere with any applicable requirement concerning reasonable further progress towards, or attainment of, any of the NAAQS, or any other applicable requirement of the CAA.

Section 193 provides, in relevant part, that no control requirement in effect, or required to be adopted, before November 15, 1990 (*i.e.*, the effective date of the CAA Amendments of 1990) in any area which is a nonattainment area for any air pollutant may be modified after November 15, 1990 in any manner unless the modification insures equivalent or greater emission reductions of such air pollutant. Arizona's Stage II vapor recovery controls were developed in response to the CAA Amendments of 1990 and thus were adopted and approved in the years following the 1990 CAA Amendments. Thus, the requirements of section 193 do not apply to this particular SIP revision.

As described in the **Background** section of this document, Stage II and ORVR are two types of emission control systems that capture fuel vapors from vehicle gas tanks during refueling. Stage II controls are installed in the dispensing pumps while ORVR is installed as part of the motor vehicle. Stage II and ORVR were initially both required by the 1990 CAA Amendments, but Congress recognized that Stage II and ORVR would eventually become largely redundant technologies as the percentage of the nation's motor vehicle fleet equipped with ORVR increases, and provided authority to the EPA to allow states to remove Stage II from their SIPs after the EPA finds that ORVR is in widespread use. The EPA's Stage II Guidance projects that, by 2015, over 84% of all the gasoline dispensed in the nation will be dispensed to ORVR-equipped motor vehicles.[9] As such, Stage II and ORVR have become largely redundant technologies, and Stage II control systems are achieving an ever-declining emissions benefit as more ORVR-equipped vehicle continue to enter the on-road motor vehicle fleet. In addition, the EPA's Stage II Guidance recognizes that, in areas where certain types of vacuum-assist Stage II control systems are used, the limited compatibility between ORVR and some configurations of this Stage II hardware may ultimately result in an area-wide emissions disbenefit. The disbenefit can result when the Stage II controls pull air into the underground tank instead of gasoline vapors when both vacuum-assist Stage II controls and ORVR are active during refueling. This increases the pressure in the underground tank and can cause venting of excess emissions into the air.

The Phoenix-Mesa ozone nonattainment area is an area where the vast majority of Stage II systems that have been installed use vacuum assist technologies.[10] As documented in chapter 2 of the Stage II Vapor Recovery SIP Revision and in MAG's technical support document (appendix A, exhibit 1 of the SIP Revision), MAG used the equations recommended by the EPA in its Stage II Guidance to calculate the areawide emission reduction benefits/disbenefits associated with Stage II controls on vehicle refueling emissions in the Phoenix-Mesa ozone nonattainment area. More specifically, MAG developed year-by-year estimates of areawide VOC emissions from motor vehicle refueling with use of Stage II controls in the Phoenix-Mesa area taking into account the fraction of gasoline throughput covered by Stage II controls, the fraction of gasoline dispensed to ORVR-equipped vehicles, the Stage II control in-use control efficiency, the fraction of gasoline dispensed through vacuum-assisted Stage II control, and the compatibility factor for the increase in underground storage tank vent emissions relative to normal conditions.

Based on MAG's estimates, assuming Stage II requirements remain in place, the VOC emissions reductions benefits from Stage II controls would continue a steady decline until 2018 when the implementation of Stage II controls will first result in an emissions disbenefit. Without rescission of Stage II control requirements, the disbenefit would then increase over time in concert with the increase in the frequency of refueling by ORVR-equipped vehicles at vacuum-assist Stage II GDFs.

The Stage II Vapor Recovery SIP Revision is intended to minimize the temporary increases in VOC emissions during the decommissioning process and to avoid the long-term disbenefit by eliminating the requirement for installing Stage II equipment at new GDFs and phasing-out the Stage II requirement for (and providing for the removal of Stage II equipment at) existing GDFs from October 2016 through September 2018. To estimate the emissions impacts due to the SIP Revision, MAG developed year-by-year VOC estimates for the foregone emissions reductions due to construction of new GDFs from 2014 through 2017 without Stage II controls and due to the decommissioning of Stage II controls at existing GDFs during the 2017 ozone season. Table 1 below compares the VOC emissions impacts with and without the Stage II Vapor Recovery SIP Revision in the Phoenix-Mesa area based on MAG's estimates.

[9] See Table A–1 of the Stage II Guidance.

[10] Table A–6 of the EPA's Stage II Guidance cites the percentages of State/Area GDF using vacuum assist Stage II technology. The listed percentage for the Phoenix-Mesa area is 85%.

TABLE 1—COMPARISON OF VOC EMISSIONS IMPACTS IN THE PHOENIX-MESA AREA WITH AND WITHOUT THE STAGE II VAPOR RECOVERY SIP REVISION

Year	Column 1: Emission reduction benefits from Stage II controls (summer, mtpd) [a]	Column 2: Emission reduction benefits from Stage II controls with SIP Revision (summer, mtpd) [b]	Column 3: Emission Impact of SIP Revision (summer, mtpd) [c]
2014	0.725	0.710	0.015
2015	0.462	0.443	0.019
2016	0.238	0.223	0.015
2017	0.060	0.029	0.031
2018	−0.108	−0.023	−0.085
2019	−0.244	0	−0.244
2020	−0.359	0	−0.359

[a] Column 1 is from table 2–3 of the Stage II Vapor Recovery SIP Revision.
[b] Column 2 is derived by combining column 1 with the estimates of total temporary increases in VOC emissions from the SIP Revision shown in table 2–7 of the Stage II Vapor Recovery SIP Revision, except for year 2018 during which a disbenefit of 0.023 mtpd is expected due to existing facilities that have not removed Stage II controls by the beginning of the 2018 ozone season.
[c] Column 3 is derived by subtracting column 2 from column 1.
Note: Negative values in the columns listing emission reduction benefits indicate increases in emissions.

As shown in table 1, without the Stage II Vapor Recovery SIP Revision, the emissions benefits from implementation of Stage II controls in the Phoenix-Mesa area would decline until 2018 when implementation of Stage II would result in an emissions increase due to the incompatibility between ORVR-equipped vehicles and vacuum-assist Stage II technology. With the SIP Revision, table 1 shows that the emissions reduction benefits from implementation of Stage II in the Phoenix-Mesa area would be reduced slightly due to the construction and operation of new GDFs without Stage II controls and due to the phase-out of Stage II vapor controls at existing GDFs during the 2017 ozone season.[11] The temporary emissions increases due to the SIP Revision (relative to the scenario in which Stage II requirements remain fully implemented) will occur during years 2014 through 2017 and range from 0.015 mtpd to 0.031 mtpd. Beginning in 2018 and increasing in magnitude thereafter, the SIP Revision will result in fewer VOC emissions than would otherwise have occurred if Stage II requirements were to remain fully implemented in the Phoenix-Mesa area (once again, due to the incompatibility of ORVR-equipped vehicles and vacuum-assist Stage II technologies).

For perspective, we note that the temporary increases in VOC emissions during years 2014 through 2017 due to the SIP Revision would represent an approximate 0.002 percent to 0.005 percent increase in the overall VOC emissions inventory in the Phoenix-Mesa area.[12] Such increases would have negligible impacts on ozone concentrations in the area. More importantly, the schedule for the phase-out of Stage II controls under the SIP Revision will maintain most of the emissions reductions benefits associated with Stage II control through 2017 while avoiding the more significant increases in VOC emissions that would otherwise occur beginning in 2019 and beyond due to the incompatibility effects described above between ORVR-equipped vehicles and vacuum-assist Stage II technologies. In 2018, the scheduled phase-out will reduce the emissions increase (due to ORVR and Stage II incompatibilities) that would otherwise be expected but would not entirely avoid an emissions increase because some existing GDFs will not yet have removed Stage II controls by the beginning of the 2018 ozone season. All Stage II controls will be decommissioned by September 30, 2018 under the Stage II Vapor Recovery SIP Revision. Lastly, the phase-out of Stage II controls by the end of the 2018 ozone season will support longer-term regional efforts to attain or maintain the 1997 and 2008 8-hour ozone standards in the Phoenix-Mesa area.

We find MAG's methods and assumptions, as documented in chapter 2 of the Stage II Vapor Recovery SIP Revision and in MAG's technical support document, to be reasonable, and we find that MAG's emissions estimates provide a reasonable basis upon which to evaluate the ozone impacts of the SIP Revision. Moreover, based on MAG's emissions estimates and for the reasons provided above, we conclude that the SIP Revision would not interfere with reasonable further progress toward, or attainment of, any of the NAAQS and would not interfere with any other applicable requirement of the CAA. Thus, we conclude that the SIP Revision is approvable under CAA section 110(l).

IV. The EPA's Action and Request for Public Comment

The EPA is taking direct final action to approve the Stage II Vapor Recovery SIP Revision submitted by ADEQ on September 2, 2014 to provide for the phased removal of ''Stage II'' vapor recovery equipment at gasoline dispensing facilities in the Phoenix-Mesa area. Specifically, the EPA is approving a SIP revision that eliminates the requirement to install and operate such equipment at new gasoline dispensing facilities, and that provides for the phased removal of such equipment at existing gasoline dispensing facilities from October 2016 through September 2018.

The EPA is approving this SIP revision because Stage II vapor recovery controls are no longer a SIP requirement under CAA section 182(b)(3) due to EPA's ''widespread use determination'' for ORVR. Additionally, we are approving this SIP revision because the temporary incremental increase in VOC emissions from 2014 through 2018 would not interfere with reasonable further progress toward, or attainment of, any of the NAAQS, and because this SIP revision avoids the longer-term VOC emissions increases associated with continued implementation of Stage II controls in the Phoenix-Mesa area. As

[11] Under the SIP Revision, the phase-out for existing GDFS begins in October 2016, and thus does not affect the 2016 ozone season.

[12] The EPA-approved MAG Eight-Hour Ozone Maintenance Plan anticipates VOC emissions between 653.9 mtpd (June ozone episode, 2005) and 659.0 mtpd (June ozone episode, 2015) during the relevant period. See our proposed approval of the maintenance plan and redesignation request at 79 FR 16734, at 16744 (March 26, 2014).

part of this final action, the EPA is approving the specific statutory provisions that provide for the phase-out of Stage II controls in Area A, *i.e.*, sections 5 through 8, and 10 through 12 of House Bill 2128, amending ARS sections 41–2131, 41–2132, 41–2133 and adding section 41–2135.[13]

We are publishing this action without prior proposal because we view this as a noncontroversial SIP revision and anticipate no adverse comments. In the Proposed Rules section of this **Federal Register** publication, however, we are publishing a separate document that will serve as the proposal to approve the state SIP revision if relevant adverse comments are filed. This rule will be effective November 2, 2015 without further notice unless we receive relevant adverse comments by October 2, 2015.

If we receive such comments, we will withdraw this action before the effective date by publishing a separate document withdrawing the direct final action. All public comments received will then be addressed in a subsequent final rule based on the proposed action. The EPA will not institute a second comment period. Any parties interested in commenting on this action should do so at this time. Please note that if the EPA receives adverse comment on an amendment, paragraph, or section of this rule and if that provision may be severed from the remainder of this rule, the EPA may adopt as final those provisions of the rule that are not the subject of an adverse comment. If we do not receive any comments, this action will be effective on November 2, 2015.

V. Incorporation by Reference

In this rule, the EPA is finalizing regulatory text that includes incorporation by reference. In accordance with requirements of 1 CFR 51.5, the EPA is finalizing the incorporation by reference of certain sections of House Bill 2128 amending various sections of the Arizona Revised Statutes related to stage II vapor recovery systems in Area A, effective April 22, 2014, as described in the amendments to 40 CFR part 52 set forth below. The EPA has made, and will continue to make, these documents generally available electronically through *www.regulations.gov* and/or in hard copy at the appropriate EPA office (see the **ADDRESSES** section of this preamble for more information).

VI. Statutory and Executive Order Reviews

Under the Clean Air Act, the Administrator is required to approve a SIP submission that complies with the provisions of the Act and applicable Federal regulations. 42 U.S.C. 7410(k); 40 CFR 52.02(a). Thus, in reviewing SIP submissions, EPA's role is to approve state choices, provided that they meet the criteria of the Clean Air Act. Accordingly, this action merely approves state law as meeting Federal requirements and does not impose additional requirements beyond those imposed by state law. For that reason, this action:

- Is not a ''significant regulatory action'' subject to review by the Office of Management and Budget under Executive Order 12866 (58 FR 51735, October 4, 1993);
- does not impose an information collection burden under the provisions of the Paperwork Reduction Act (44 U.S.C. 3501 *et seq.*);
- is certified as not having a significant economic impact on a substantial number of small entities under the Regulatory Flexibility Act (5 U.S.C. 601 *et seq.*);
- does not contain any unfunded mandate or significantly or uniquely affect small governments, as described in the Unfunded Mandates Reform Act of 1995 (Pub. L. 104–4);
- does not have Federalism implications as specified in Executive Order 13132 (64 FR 43255, August 10, 1999);
- is not an economically significant regulatory action based on health or safety risks subject to Executive Order 13045 (62 FR 19885, April 23, 1997);
- is not a significant regulatory action subject to Executive Order 13211 (66 FR 28355, May 22, 2001);
- is not subject to requirements of Section 12(d) of the National Technology Transfer and Advancement Act of 1995 (15 U.S.C. 272 note) because application of those requirements would be inconsistent with the Clean Air Act; and
- does not provide the EPA with the discretionary authority to address, as appropriate, disproportionate human health or environmental effects, using practicable and legally permissible methods, under Executive Order 12898 (59 FR 7629, February 16, 1994).

In addition, the SIP is not approved to apply on any Indian reservation land or in any other area where the EPA or an Indian tribe has demonstrated that a tribe has jurisdiction. In those areas of Indian country, this rule does not have tribal implications as specified by Executive Order 13175 (65 FR 67249, November 9, 2000), nor will it impose substantial direct costs on tribal governments or preempt tribal law.

The Congressional Review Act, 5 U.S.C. 801 *et seq.*, as added by the Small Business Regulatory Enforcement Fairness Act of 1996, generally provides that before a rule may take effect, the agency promulgating the rule must submit a rule report, which includes a copy of the rule, to each House of the Congress and to the Comptroller General of the United States. The EPA will submit a report containing this action and other required information to the U.S. Senate, the U.S. House of Representatives, and the Comptroller General of the United States prior to publication of the rule in the **Federal Register**. A major rule cannot take effect until 60 days after it is published in the **Federal Register**. This action is not a ''major rule'' as defined by 5 U.S.C. 804(2).

Under section 307(b)(1) of the Clean Air Act, petitions for judicial review of this action must be filed in the United States Court of Appeals for the appropriate circuit by November 2, 2015. Filing a petition for reconsideration by the Administrator of this final rule does not affect the finality of this action for the purposes of judicial review nor does it extend the time within which a petition for judicial review may be filed, and shall not postpone the effectiveness of such rule or action. Parties with objections to this direct final rule are encouraged to file a comment in response to the parallel notice of proposed rulemaking for this action published in the Proposed Rules section of this **Federal Register**, rather than file an immediate petition for judicial review of this direct final rule, so that the EPA can withdraw this direct final rule and address the comment in the proposed rulemaking. This action may not be challenged later in proceedings to enforce its requirements (see section 307(b)(2)).

List of Subjects in 40 CFR Part 52

Environmental protection, Air pollution control, Incorporation by reference, Intergovernmental relations, Ozone, Reporting and recordkeeping requirements, Volatile organic compounds.

Dated: March 30, 2015.

Jared Blumenfeld,

Regional Administrator, Region IX.

Editorial note: This document was received for publication by the Office of the Federal Register on August 27, 2015.

[13] Approval of these statutory provisions as revisions to the Arizona SIP supersedes the following existing SIP provisions in the Arizona SIP: ARS section 41–2131, as approved at 77 FR 35279 (June 13, 2012); ARS section 41–2132, as approved at 77 FR 35279 (June 13, 2012); and ARS section 41–2133, as approved at 77 FR 35279 (June 13, 2012).

Chapter I, title 40 of the Code of Federal Regulations is amended as follows:

PART 52—APPROVAL AND PROMULGATION OF IMPLEMENTATION PLANS

■ 1. The authority citation for part 52 continues to read as follows:

Authority: 42 U.S.C. 7401 *et seq.*

Subpart D—Arizona

■ 2. Section 52.120 is amended by adding paragraph (c)(171) to read as follows:

§ 52.120 Identification of plan.

* * * * *

(c) * * *

(171) The following plan was submitted on September 2, 2014 by the Governor's designee.

(i) *Incorporation by reference.*

(A) Arizona Department of Environmental Quality.

(*1*) House Bill 2128, effective April 22, 2014, excluding sections 1 through 4, and 9 (including the text that appears in all capital letters and excluding the text that appears in strikethrough).

(ii) Additional materials.

(A) Arizona Department of Environmental Quality.

(*1*) *MAG 2014 State Implementation Plan Revision for the Removal of Stage II Vapor Recovery Controls in the Maricopa Eight-Hour Ozone Nonattainment Area* (August 2014), adopted by the Regional Council of the Maricopa Association of Governments on August 27, 2014, excluding appendix A, exhibit 2 (''Arizona Revised Statutes Listed in Table 1–1'').

[FR Doc. 2015–21681 Filed 9–1–15; 8:45 am]

BILLING CODE 6560–50–P

DEPARTMENT OF HOMELAND SECURITY

Federal Emergency Management Agency

44 CFR Part 67

[Docket ID FEMA–2015–0001]

Final Flood Elevation Determinations

AGENCY: Federal Emergency Management Agency, DHS.

ACTION: Final rule.

SUMMARY: Base (1% annual-chance) Flood Elevations (BFEs) and modified BFEs are made final for the communities listed below. The BFEs and modified BFEs are the basis for the floodplain management measures that each community is required either to adopt or to show evidence of being already in effect in order to qualify or remain qualified for participation in the National Flood Insurance Program (NFIP).

DATES: The date of issuance of the Flood Insurance Rate Map (FIRM) showing BFEs and modified BFEs for each community. This date may be obtained by contacting the office where the maps are available for inspection as indicated in the table below.

ADDRESSES: The final BFEs for each community are available for inspection at the office of the Chief Executive Officer of each community. The respective addresses are listed in the table below.

FOR FURTHER INFORMATION CONTACT: Luis Rodriguez, Chief, Engineering Management Branch, Federal Insurance and Mitigation Administration, Federal Emergency Management Agency, 500 C Street SW., Washington, DC 20472, (202) 646–4064, or (email) *Luis.Rodriguez3@fema.dhs.gov.*

SUPPLEMENTARY INFORMATION: The Federal Emergency Management Agency (FEMA) makes the final determinations listed below for the modified BFEs for each community listed. These modified elevations have been published in newspapers of local circulation and ninety (90) days have elapsed since that publication. The Deputy Associate Administrator for Mitigation has resolved any appeals resulting from this notification.

This final rule is issued in accordance with section 110 of the Flood Disaster Protection Act of 1973, 42 U.S.C. 4104, and 44 CFR part 67. FEMA has developed criteria for floodplain management in floodprone areas in accordance with 44 CFR part 60.

Interested lessees and owners of real property are encouraged to review the proof Flood Insurance Study and FIRM available at the address cited below for each community. The BFEs and modified BFEs are made final in the communities listed below. Elevations at selected locations in each community are shown.

National Environmental Policy Act. This final rule is categorically excluded from the requirements of 44 CFR part 10, Environmental Consideration. An environmental impact assessment has not been prepared.

Regulatory Flexibility Act. As flood elevation determinations are not within the scope of the Regulatory Flexibility Act, 5 U.S.C. 601–612, a regulatory flexibility analysis is not required.

Regulatory Classification. This final rule is not a significant regulatory action under the criteria of section 3(f) of Executive Order 12866 of September 30, 1993, Regulatory Planning and Review, 58 FR 51735.

Executive Order 13132, Federalism. This final rule involves no policies that have federalism implications under Executive Order 13132.

Executive Order 12988, Civil Justice Reform. This final rule meets the applicable standards of Executive Order 12988.

List of Subjects in 44 CFR Part 67

Administrative practice and procedure, Flood insurance, Reporting and recordkeeping requirements.

Accordingly, 44 CFR part 67 is amended as follows:

PART 67—[AMENDED]

■ 1. The authority citation for part 67 continues to read as follows:

Authority: 42 U.S.C. 4001 *et seq.;* Reorganization Plan No. 3 of 1978, 3 CFR, 1978 Comp., p. 329; E.O. 12127, 44 FR 19367, 3 CFR, 1979 Comp., p. 376.

§ 67.11 [Amended]

■ 2. The tables published under the authority of § 67.11 are amended as follows:

Dated: August 20, 2015.

Roy E. Wright,

Deputy Associate Administrator for Mitigation, Department of Homeland Security, Federal Emergency Management Agency.

Flooding source(s)	Location of referenced elevation	* Elevation in feet (NGVD) + Elevation in feet (NAVD) # Depth in feet above ground ^Elevation in meters (MSL) modified	Communities affected
Clay County, Missouri, and Incorporated Areas Docket Nos.: FEMA–B–1192			
Brushy Creek	Approximately 400 feet upstream of the most downstream Clinton County boundary.	+987	City of Lawson, Unincorporated Areas of Clay County.
	At the most upstream Clinton County boundary	+1045	
Cates Branch	At the upstream side of Liberty Landing Road	+756	City of Liberty, Unincorporated Areas of Clay County.
	At the downstream side of Harrison Street	+851	
Clear Creek	At the Fishing River confluence	+775	City of Kearney, City of Mosby, Unincorporated Areas of Clay County.
	Approximately 0.5 mile upstream of Nation Road	+823	
Clear Creek Tributary 15	Approximately 0.8 mile upstream of the Clear Creek confluence.	+780	Unincorporated Areas of Clay County.
	Approximately 1 mile upstream of the Clear Creek confluence.	+788	
Clear Creek Tributary 15.1 (overflow effects from Clear Creek).	Approximately 1,375 feet upstream of the Clear Creek confluence.	+780	City of Kearney, Unincorporated Areas of Clay County.
	Approximately 377 feet upstream of 6th Street	+786	
Crockett Creek	At the Holmes Creek confluence	+766	City of Mosby, Unincorporated Areas of Clay County.
	Approximately 1,400 feet upstream of Longridge Road	+790	
Crockett Creek Tributary 3	At the Crockett Creek confluence	+771	Unincorporated Areas of Clay County.
	Approximately 0.7 mile upstream of the Crockett Creek confluence.	+791	
Crockett Creek Tributary 4	Approximately 1,400 feet upstream of Longridge Road	+790	Unincorporated Areas of Clay County.
	Approximately 390 feet upstream of Stockdale road	+814	
Dry Fork	At the downstream side of South Thompson Avenue	+773	City of Excelsior Springs, Unincorporated Areas of Clay County.
	Approximately 0.6 mile downstream of Salem Road	+905	
East Creek	Approximately 550 feet downstream of North Broadway Avenue.	+867	City of Gladstone.
	At the upstream side of Northeast 61st Street	+904	
East Fork Fishing River	At the Fishing River confluence	+744	City of Excelsior Springs, Unincorporated Areas of Clay County.
	Approximately 1,200 feet upstream of Isley Boulevard	+786	
East Fork Fishing River Tributary 2.	Approximately 154 feet downstream of Saint Louis Avenue.	+768	City of Excelsior Springs.
	Approximately 1,600 feet upstream of Saint Louis Avenue	+768	
East Fork Line Creek Tributary 1.	Approximately 1,120 feet upstream of Arrowhead Trafficway.	+909	City of Gladstone.
	Approximately 1,150 feet upstream of Arrowhead Trafficway.	+909	
First Creek	At the Second Creek confluence	+819	City of Smithville, Unincorporated Areas of Clay County.
	At the Platte County boundary	+864	
Fishing River	At the Ray County boundary	+731	City of Kearney, City of Mosby, Unincorporated Areas of Clay County, Village of Prathersville.
	Approximately 0.5 mile downstream of North Home Avenue.	+860	
Holmes Creek	At the Fishing River confluence	+763	City of Kearney, City of Mosby, Unincorporated Areas of Clay County.
	Approximately 1.1 miles upstream of North State Route 33.	+829	

Flooding source(s)	Location of referenced elevation	* Elevation in feet (NGVD) + Elevation in feet (NAVD) # Depth in feet above ground ∧Elevation in meters (MSL) modified	Communities affected
Little Platte River	Approximately 1.2 miles downstream of U.S. Route 169	+810	City of Smithville, Unincorporated Areas of Clay County.
	Approximately 0.5 mile downstream of State Route F	+815	
Little Shoal Creek	At the Shoal Creek confluence	+744	City of Glenaire, City of Liberty, City of Pleasant Valley, Village of Claycomo.
	At the upstream side of North Church Road	+800	
Little Shoal Creek Tributary 5	Approximately 0.4 mile upstream of the Little Shoal Creek confluence.	+764	City of Liberty.
	At the downstream side of South State Route 291	+843	
Little Shoal Creek Tributary 6	At the downstream side of Smiley Street	+765	City of Glenaire, City of Liberty.
	Approximately 600 feet downstream of Liberty Drive	+830	
Little Shoal Creek Tributary 7	At the Little Shoal Creek confluence	+764	City of Glenaire, City of Liberty.
	Approximately 300 feet upstream of Kings Highway	+798	
Mill Creek	At the upstream side of Randolph Road	+789	City of Gladstone, Village of Claycomo.
	At the downstream side of Northeast 62nd Terrace	+949	
Missouri River	At the Ray County boundary	+717	City of Missouri City, City of North Kansas City, Unincorporated Areas of Clay County, Village of Randolph.
	Approximately 300 feet upstream of I–29	+748	
Muddy Fork	At the Clear Creek confluence	+788	City of Holt, City of Kearney, Unincorporated Areas of Clay County.
	Approximately 0.6 mile upstream of County Road BB	+863	
Old Maids Creek	Approximately 980 feet upstream of Arrowhead Trafficway	+896	City of Gladstone.
	Approximately 990 feet upstream of Arrowhead Trafficway	+896	
Owens Branch	At the Little Platte River confluence	+812	City of Smithville, Unincorporated Areas of Clay County.
	Approximately 1,000 feet downstream of Northeast 188th Street.	+911	
Polecat Creek	At the Wilkerson Creek confluence	+884	Unincorporated Areas of Clay County.
	Approximately 0.95 mile upstream of Clementine Road	+980	
Randolph Creek	At the upstream side of the most downstream crossing of I–435.	+751	City of Randolph.
	At the downstream side of the most upstream crossing of I–435.	+779	
Randolph Creek Tributary	At the Randolph Creek confluence	+751	City of Randolph.
	Approximately 1,700 feet upstream of the Randolph Creek confluence.	+763	
Rock Creek	At the upstream side of Armour Road	+759	City of Avondale, City of North Kansas City.
	Approximately 150 feet upstream of Northeast Excelsior Street.	+780	
Rock Creek Gladstone	Approximately 150 feet upstream of North Jackson Drive	+851	City of Gladstone.
	Approximately 250 feet upstream of Northeast 72nd Street.	+934	
Rock Creek Tributary 11 (backwater effects from Rock Creek Tributary 11.2).	From the Rock Creek Tributary 11.2 confluence to the downstream side of I–29.	+761	City of North Kansas City.
Rock Creek Tributary 11.2	At the upstream side of Armour Road	+758	City of North Kansas City.
	Approximately 640 feet upstream of I–29	+784	
Rocky Branch	At the Wilkerson Creek confluence	+848	City of Smithville, Unincorporated Areas of Clay County.
	Approximately 250 feet downstream of Northeast 132nd Street.	+888	
Rush Creek	At the Missouri River confluence	+727	City of Liberty, Unincorporated Areas of Clay County.

Flooding source(s)	Location of referenced elevation	* Elevation in feet (NGVD) + Elevation in feet (NAVD) # Depth in feet above ground ∧Elevation in meters (MSL) modified	Communities affected
	At the Rush Creek Tributary 15 confluence	+826	
Second Creek	At the Little Platte River confluence	+813	City of Smithville, Unincorporated Areas of Clay County.
	At the Platte County boundary	+822	
Shoal Creek Tributary 20	At the Shoal Creek confluence	+769	City of Pleasant Valley.
	Approximately 300 feet downstream of North Corrington Avenue.	+824	
Shoal Creek Tributary 20.1	At the Shoal Creek Tributary 20 confluence	+773	City of Pleasant Valley.
	Approximately 1,400 feet upstream of Kaill Road	+805	
Town Branch	At the Shoal Creek confluence	+734	City of Liberty.
	Approximately 0.8 mile upstream of East Ruth Ewing Road.	+775	
Wilkerson Creek	Approximately 400 feet upstream of East County Road DD.	+817	City of Smithville, Unincorporated Areas of Clay County.
	Approximately 0.4 mile upstream of the Wilkerson Creek Tributary 5 confluence.	+936	
Williams Creek	At the Fishing River confluence	+758	Unincorporated Areas of Clay County, Village of Pratherville.
	Approximately 0.5 mile upstream of County Road RA	+851	
Williams Creek Tributary 14	At the Williams Creek confluence	+817	Unincorporated Areas of Clay County.
	Approximately 150 feet upstream of Northeast 161st Street.	+834	

* National Geodetic Vertical Datum.
+ North American Vertical Datum.
# Depth in feet above ground.
∧ Mean Sea Level, rounded to the nearest 0.1 meter.

ADDRESSES

City of Avondale

Maps are available for inspection at City Hall, 3007 Northeast Highway 10, Avondale, MO 64117.

City of Excelsior Springs

Maps are available for inspection at City Hall, 201 East Broadway Street, Excelsior Springs, MO 64024.

City of Gladstone

Maps are available for inspection at City Hall, 7010 North Holmes Street, Gladstone, MO 64118.

City of Glenaire

Maps are available for inspection at City Hall, 309 Smiley Road, Glenaire, MO 64068.

City of Holt

Maps are available for inspection at City Hall, 315 Main Street, Holt, MO 64048.

City of Kearney

Maps are available for inspection at City Hall, 100 East Washington Street, Kearney, MO 64060.

City of Lawson

Maps are available for inspection at City Hall, 103 South Pennsylvania Avenue, Lawson, MO 64062.

City of Liberty

Maps are available for inspection at City Hall, 101 East Kansas Street, Liberty, MO 64068.

City of Missouri City

Maps are available for inspection at the Clay County Planning and Zoning Department, 234 West Shrader Street, Suite C, Liberty, MO 64068.

City of Mosby

Maps are available for inspection at City Hall, 12312 4th Street, Mosby, MO 64024.

City of North Kansas City

Maps are available for inspection at City Hall, 2010 Howell Street, North Kansas City, MO 64116.

City of Pleasant Valley

Maps are available for inspection at City Hall, 6500 Royal Street, Pleasant Valley, MO 64068.

City of Randolph

Maps are available for inspection at City Hall, 7777 North East Birmingham Road, Randolph, MO 64161.

City of Smithville

Maps are available for inspection at City Hall, 107 West Main Street, Smithville, MO 64089.

Unincorporated Areas of Clay County

Maps are available for inspection at the Clay County Planning and Zoning Department, 234 West Shrader Street, Suite C, Liberty, MO 64068.

Village of Claycomo

Maps are available for inspection at the Village Municipal Office, 115 East Highway 69, Claycomo, MO 64119.

Village of Prathersville

Maps are available for inspection at the Clay County Planning and Zoning Department, 234 West Shrader Street, Suite C, Liberty, MO 64068.

[FR Doc. 2015–21741 Filed 9–1–15; 8:45 am]

BILLING CODE 9110–12–P

DEPARTMENT OF TRANSPORTATION

National Highway Traffic Safety Administration

49 CFR Parts 591and 592

[Docket No. NHTSA–2015–0076]

RIN 2127–AL63

Allowing Importers To Provide Information to U.S. Customs and Border Protection in Electronic Format

AGENCY: National Highway Traffic Safety Administration (NHTSA), Department of Transportation (DOT).

ACTION: Interim Final Rule; request for comments.

SUMMARY: This interim Final Rule amends NHTSA's regulation on the importation of motor vehicles and motor vehicle equipment subject to Federal safety, bumper and theft prevention standards by allowing importers to provide information to United States Customs and Border Protection (CBP) in either electronic or paper format. Presently, certain regulatory provisions require importers to provide documentation or information in a ''written statement'' or in ways that imply the submission of a paper document, including the phrases ''in duplicate,'' ''a copy of,'' a ''document,'' and ''accompanied by a statement.'' Over the course of the coming months, CBP plans to allow importers to file importation information in paper format only or electronic format only. To allow importers to choose their preferred format for filing information required by NHTSA, the agency is amending its importation regulations to specify that importers have the option to file all required information electronically, in addition to the paper option currently available.

This document is being issued as an interim Final Rule to provide timely assistance to importers by allowing alternative methods of filing with CBP the importation information required by NHTSA. The amendments in this interim Final Rule do not create any new rights or obligations, nor impose any new reporting requirements. The agency herein requests comments on the rule. The agency will publish a notice responding to any comments received, if any, and will amend provisions of the regulation if appropriate.

DATES: *Effective date:* This interim Final Rule becomes effective September 2, 2015.

Comments: Comments on this interim Final Rule are due not later than October 2, 2015.

ADDRESSES: Written comments to NHTSA may be submitted using any one of the following methods:

- *Federal eRulemaking Portal:* go to *http://www.regulations.gov.* Follow the online instructions for submitting comments.
- *Mail:* Docket Management Facility, M–30, U.S. Department of Transportation, West Building Ground Floor, Rm. W12–140, 1200 New Jersey Avenue SE., Washington, DC 20590.
- *Hand Delivery or Courier:* U.S. Department of Transportation, West Building Ground Floor, Rm. W12–140, 1200 New Jersey Avenue SE., Washington, DC 20590 between 9 a.m. and 5 p.m. ET, Monday through Friday, except Federal holidays.
- *Fax:* (202) 493–2251.

Regardless of how you submit your comments, please be sure you mention the docket number of this document located at the top of this notice in your correspondence.

You may call the Docket at 202–366–9324.

Note that all comments received will be posted without change to *http://www.regulations.gov*, including any personal information provided.

FOR FURTHER INFORMATION CONTACT: Arija Flowers, Trial Attorney, Office of the Chief Counsel, National Highway Traffic Safety Administration, 1200 New Jersey Avenue SE., Washington, DC 20590 (telephone: 202–366–5263).

SUPPLEMENTARY INFORMATION:

Table of Contents

I. Background
II. Immediate Effective Date and Request for Comments
III. Regulatory Analyses and Notices

I. Background

Under 49 CFR parts 591 and 592, importers of motor vehicles and motor vehicle equipment are required, among other things, to provide certain information to NHTSA at the time of importation, which is collected by CBP. In the past, CBP collected all information on paper but has moved to a system that allows for either paper format filing or a ''hybrid'' combination of paper and electronic filing. Beginning in the fall of 2015, and with pilot programs beginning in the summer of 2015, CBP is introducing a new data collection system that will allow importers to make an electronic reporting of commodities being presented for importation at U.S. ports. After implementation of this new system, CBP may require importation declaration documents to be filed in either all paper or all electronic format. CBP is currently advising that importers will no longer have the option of using the ''hybrid'' filing system.

Currently, there are several provisions within 49 CFR part 591, *Importation of Vehicles and Equipment Subject to Federal Safety, Bumper and Theft Prevention Standards,* and a provision in 49 CFR part 592, *Registered Importers of Vehicles Not Originally Manufactured to Conform to the Federal Motor Vehicle Safety Standards,* that either explicitly or impliedly require a paper filing for specific pieces of data. Thus, maintaining these provisions may mean that, once the new CBP data collection system is implemented, importers would be required to file on paper, imposing an unintended burden on those currently making hybrid filings. To avoid this result, this interim Final Rule amends the wording of the provisions in 49 CFR parts 591 and 592 that explicitly or impliedly require paper filings clarifying that filings can be made in any format accepted by CBP. This rulemaking does not impose additional obligations or burdens on any party and, specifically, does not require filing of any new or additional information. Rather, it provides

importers with the option of filing importation information already required under 49 CFR parts 591 and 592 in either paper or electronic format, according to their preference.

In its rulemaking establishing a continuous entry DOT conformance bond, NHTSA required an importer to present to CBP at the time of importation a copy of Customs Form (CF) 7501. The requirement to furnish a copy of the CF 7501 was initially established at 49 CFR 591.6(c) and 49 CFR 592.6. The agency stated that the CF 7501 contained certain information such as the entered value of the vehicle that was necessary if NHTSA decided to enforce forfeiture of the DOT conformance bond. NHTSA has determined that it no longer needs information from the CF 7501 to pursue DOT conformance bond forfeiture and this requirement is being deleted from the regulation. Additionally, elimination of this previously required documentation will reduce the burden on importers.

This document is being issued as an interim Final Rule to provide timely assistance to importers by allowing alternative methods of filing importation documents with CBP. The amendments in this interim Final Rule do not create any new rights or obligations, nor impose any new reporting requirements. The agency herein requests comments on the rule. The agency will publish a notice responding to any comments received and, if appropriate, will amend provisions of the regulation.

This rule also amends the delegations of authority to reflect the current CFR citations.

II. Immediate Effective Date and Request for Comments

The Administrative Procedure Act requires notice of a proposed rulemaking and opportunity for public comment unless an exception applies. 5 U.S.C. 553(b). One of these exceptions is when the agency finds good cause not to provide notice and public comment because public comment is impracticable, unnecessary, or contrary to the public interest, and the agency incorporates that finding, and briefly states the reasons for that finding, in the rule. 5 U.S.C. 553(b)(3)(B). NHTSA has determined that there is good cause for not taking public comment prior to issuing this interim Final Rule since NHTSA does not anticipate any negative comments or opposition to allowing importers to file importation documentation in any format provided by CBP, making public comment unnecessary. Further, NHTSA has determined that there is good cause for not taking public comment prior to issuing this interim Final Rule because it is contrary to the public interest to take public comment where CBP is piloting the electronic filing system in the coming weeks, with implementation throughout fall 2015, and importers could be prevented from participating in both the pilot programs and the fully operational electronic filing system until these regulatory changes are made.

Further, the amendments in this interim Final Rule do not create any new rights or obligations not already present in 49 CFR parts 591 and 592. Because this interim Final Rule does not create any rights or obligations, the impacts of this rule are insignificant, making notice and public comment unnecessary.

As an interim Final Rule, this regulation is fully in effect and binding upon its effective date. No further regulatory action by the agency is necessary to make this rule effective. However, in order to benefit from any comments that interested parties and the public may have, the agency is soliciting comments on this notice. Should any pertinent comments be submitted, following the close of the comment period, the agency will publish a notice responding to those comments and, if appropriate, will amend the provisions of this rule.

III. Regulatory Analyses and Notices

A. Executive Order 12866, Executive Order 13563, and DOT Regulatory Policies and Procedures

NHTSA has considered the impact of this rulemaking action under Executive Order 12866, Executive Order 13563, and the DOT's regulatory policies and procedures. This interim Final Rule was not reviewed by the Office of Management and Budget (OMB) under E.O. 12866, ''Regulatory Planning and Review.'' It is not considered to be significant under E.O. 12866 or the Department's regulatory policies and procedures.

This regulation amends 49 CFR parts 591 and 592 to allow importers of motor vehicles and motor vehicle equipment to file customs declarations electronically, as available and offered by CBP, in addition to the paper format filing option otherwise available. This final rule does not require importers to use electronic filing, nor file any different or additional information when utilizing electronic filing and, instead, is designed to reduce the burden on importers by enabling them to utilize their preferred customs declaration format. Importers are not required to take any action(s) that they are not otherwise already required to take. Because there are not any costs or savings associated with this rulemaking, which provides various filing options for importers, we have not prepared a separate economic analysis for this rulemaking.

B. Regulatory Flexibility Act

In compliance with the Regulatory Flexibility Act, 5 U.S.C. 601 *et seq.,* NHTSA has evaluated the effects of this action on small entities. I hereby certify that this rule would not have a significant impact on a substantial number of small entities. The interim Final Rule affects importers of motor vehicles and motor vehicle equipment, some of which qualify as small businesses. However, this rule does not significantly affect these entities because it does not require any additional actions on their part not already required by 49 CFR parts 591 and 592, but instead provides an electronic filing option, in addition to the paper filing option, for customs declarations according to the importer's preference.

C. Executive Order 13132 (Federalism)

NHTSA has examined today's rule pursuant to Executive Order 13132 (64 FR 43255, August 10, 1999) and concluded that no additional consultation with States, local governments or their representatives is mandated beyond the rulemaking process. The agency has concluded that the rulemaking would not have sufficient federalism implications to warrant consultation with State and local officials or the preparation of a federalism summary impact statement. The interim Final Rule would not have ''substantial direct effects on the States, on the relationship between the national government and the States, or on the distribution of power and responsibilities among the various levels of government.'' This interim Final Rule also will not preempt any state law.

D. National Environmental Policy Act

NHTSA has analyzed this interim Final Rule for the purposes of the National Environmental Policy Act. The agency has determined that implementation of this action will not have any significant impact on the quality of the human environment.

E. Paperwork Reduction Act

Under the procedures established by the Paperwork Reduction Act of 1995, a person is not required to respond to a collection of information by a Federal

agency unless the collection displays a valid OMB clearance number. The information collection requirements for 49 CFR part 591, *Importation of Vehicles and Equipment Subject to Federal Safety, Bumper and Theft Prevention Standards,* and 49 CFR part 592, *Registered Importers of Vehicles Not Originally Manufactured to Conform to the Federal Motor Vehicle Safety Standards,* are covered by OMB control number 2127–0002. The amendments in today's interim Final Rule have no impact on the burden associated with this information collection.

F. National Technology Transfer and Advancement Act

Under the National Technology Transfer and Advancement Act of 1995 (NTTAA) (Pub. L. 104–113), ''all Federal agencies and departments shall use technical standards that are developed or adopted by voluntary consensus standards bodies, using such technical standards as a means to carry out policy objectives or activities determined by the agencies and departments.'' The amendments in today's interim Final Rule allow importers of motor vehicles and motor vehicle equipment to file declarations with CBP electronically, using the electronic systems established by CBP, and do not involve any voluntary consensus standards as it relates to NHTSA or this rulemaking.

G. Civil Justice Reform

With respect to the review of the promulgation of a new regulation, section 3(b) of Executive Order 12988, ''Civil Justice Reform'' (61 FR 4729, February 7, 1996) requires that Executive agencies make every reasonable effort to ensure that the regulation: (1) Clearly specifies the preemptive effect; (2) clearly specifies the effect on existing Federal law or regulation; (3) provides a clear legal standard for affected conduct, while promoting simplification and burden reduction; (4) clearly specifies the retroactive effect, if any; (5) adequately defines key terms; and (6) addresses other important issues affecting clarity and general draftsmanship under any guidelines issued by the Attorney General. This document is consistent with that requirement.

Pursuant to this Order, NHTSA has considered these issues and determined that this interim Final Rule would not have any retroactive or preemptive effect. NHTSA notes further that there is no requirement that individuals submit a petition for reconsideration or pursue other administrative proceeding before they may file suit in court.

H. Unfunded Mandates Reform Act

The Unfunded Mandates Reform Act of 1995 requires agencies to prepare a written assessment of the costs, benefits and other effects of proposed or final rules that include a Federal mandate likely to result in the expenditure by State, local or tribal governments, in the aggregate, or by the private sector, of more than $100 million annually (adjusted for inflation with base year of 1995). This interim Final Rule would not result in expenditures by State, local or tribal governments, in the aggregate, or by the private sector in excess of $100 million annually.

I. Executive Order 13211

Executive Order 13211 (66 FR 28355, May 18, 2001) applies to any rulemaking that: (1) Is determined to be economically significant as defined under E.O. 12866, and is likely to have a significantly adverse effect on the supply of, distribution of, or use of energy; or (2) that is designated by the Administrator of the Office of Information and Regulatory Affairs as a significant energy action. This rulemaking is not subject to E.O. 13211.

J. Regulation Identifier Number (RIN)

The Department of Transportation assigns a regulation identifier number (RIN) to each regulatory action listed in the Unified Agenda of Federal Regulations. The Regulatory Information Service Center publishes the Unified Agenda in April and October of each year. You may use the RIN contained in the heading at the beginning of this document to find this action in the Unified Agenda.

List of Subjects in 49 CFR Parts 591 and 592

Administrative practice and procedure, Crime, Imports, Motor vehicle safety, Reporting and recordkeeping requirements, Surety bonds.

For the reasons discussed in the preamble, NHTSA amends 49 CFR parts 591 and 592 as follows:

PART 591—IMPORTATION OF VEHICLES AND EQUIPMENT SUBJECT TO FEDERAL SAFETY, BUMPER, AND THEFT PREVENTION STANDARDS

■ 1. The authority citation for Part 591 is revised to read as follows:

Authority: Pub. L. 100–562, 49 U.S.C. 322(a), 30117, 30141–30147; delegation of authority at 49 CFR 1.95.

■ 2. Amend § 591.5 by revising the introductory text to read as follows:

§ 591.5 Declarations required for importation.

No person shall import a motor vehicle or item of motor vehicle equipment into the United States unless, at the time it is offered for importation, its importer files a declaration and documentation, in a paper or electronic format accepted by U.S. Customs and Border Protection, which declares one of the following:

* * * * *

■ 3. Amend § 591.6 by revising the introductory text and paragraphs (a), (b), (c), (d), (e), (f) and (g) to read as follows:

§ 591.6 Documents accompanying declarations.

Declarations of eligibility for importation made pursuant to § 591.5 must be accompanied by the following certification and documents, filed either on paper or electronically, as applicable:

(a) A declaration made pursuant to § 591.5(a) shall be accompanied by a written or electronic statement substantiating that the vehicle was not manufactured for use on the public roads or that the equipment item was not manufactured for use on a motor vehicle or is not an item of motor vehicle equipment.

(b) A declaration made pursuant to § 591.5(e) shall be accompanied by:

(1) (For a motor vehicle) a written or electronic document meeting the requirements of § 568.4 of Part 568 of this chapter.

(2) (For an item of motor vehicle equipment) a written or electronic statement issued by the manufacturer of the equipment item which states the applicable Federal motor vehicle safety standard(s) with which the equipment item is not in compliance, and which describes the further manufacturing required for the equipment item to perform its intended function.

(c) A declaration made pursuant to paragraph (f) of § 591.5, and under a bond for the entry of a single vehicle, shall be accompanied by a written or electronic image of a bond in the form shown in appendix A to this part, in an amount equal to 150% of the dutiable value of the vehicle, or, if under bond for the entry of more than one vehicle, shall be accompanied by a written or electronic image of a bond in the form shown in appendix B to this part, for the conformance of the vehicle(s) with all applicable Federal motor vehicle safety and bumper standards, or, if conformance is not achieved, for the delivery of such vehicles to the Secretary of Homeland Security for export at no cost to the United Sates, or for its abandonment.

(d) A declaration made pursuant to § 591.5(f) by an importer who is not a Registered Importer shall be accompanied by a paper or electronic copy of the contract or other agreement that the importer has with a Registered Importer to bring the vehicle into conformance with all applicable Federal motor vehicle safety standards.

(e) A declaration made pursuant to § 591.5(h) shall be accompanied by a paper or electronic version of the importer's official orders or, if a qualifying member of the personnel of a foreign government on assignment in the United States, the name of the embassy to which the importer is accredited.

(f) A declaration made pursuant to § 591.5(j) shall be accompanied by the following documentation:

(1) A declaration made pursuant to § 591.5(j)(1)(i), (ii), (iv), or (v) and (j)(2)(i) shall be accompanied by a paper copy of the Administrator's permission letter, or for electronic reporting by entering the unique identifying number of the Administrator's permission letter into a U.S. Customs and Border Protection electronic data collection system, authorizing importation pursuant to § 591.5(j)(1)(i), (ii), (iv), or (v) and (j)(2)(i). Any person seeking to import a motor vehicle or motor vehicle equipment pursuant to these sections shall submit, in advance of such importation, a written request to the Administrator containing a full and complete statement identifying the vehicle or equipment, its make, model, model year or date of manufacture, VIN if a motor vehicle, and the specific purpose(s) of importation. The discussion of purpose(s) shall include a description of the use to be made of the vehicle or equipment. If use on the public roads is an integral part of the purpose for which the vehicle or equipment is imported, the statement shall request permission for use on the public roads, describing the purpose which makes such use necessary, and stating the estimated period of time during which use of the vehicle or equipment on the public roads is necessary. The request shall also state the intended means of final disposition, and disposition date, of the vehicle or equipment after completion of the purposes for which it is imported. The request shall be addressed to: Director, Office of Vehicle Safety Compliance, Fourth Floor, Room W43–481, Mail Code NVS–220, 1200 New Jersey Avenue SE., Washington, DC 20590.

(2) A declaration made pursuant to § 591.5(j)(1)(iii) and (j)(2)(i) shall be accompanied by a paper copy of the Administrator's permission letter, or for electronic reporting by entering the unique identifying number of the Administrator's permission letter into a U.S. Customs and Border Protection electronic data collection system, authorizing importation pursuant to § 591.5(j)(1)(iii) and (j)(2)(i). Any person seeking to import a motor vehicle or motor vehicle equipment pursuant to those sections shall submit, in advance of such importation, a written request to the Administrator containing a full and complete statement identifying the equipment item or the vehicle and its make, model, model year or date of manufacture, VIN, and mileage at the time the request is made. The importer's written request to the Administrator shall explain why the vehicle or equipment item is of historical or technological interest. The importer shall also state that until the vehicle is not less than 25 years old, (s)he shall not sell, or transfer possession of, or title to, the vehicle, and shall not license it for use, or operate it on the public roads, except under such terms and conditions as the Administrator may authorize. If the importer wishes to operate the vehicle on the public roads, the request to the Administrator shall include a description of the purposes for which (s)he wishes to use it on the public roads, a copy of an insurance policy or a contract to acquire an insurance policy, which contains as a condition thereof that the vehicle will not accumulate mileage of more than 2,500 miles in any 12-month period and a statement that the importer shall maintain such policy in effect until the vehicle is not less than 25 years old, a statement that the importer will allow the Administrator to inspect the vehicle at any time after its importation to verify that the accumulated mileage of the vehicle is not more than 2,500 miles in any 12-month period, and a statement that the vehicle will not be used on the public roads unless it is in compliance with the regulations of the Environmental Protection Agency.

(3) A declaration made pursuant to § 591.5(j)(2)(ii) shall be accompanied by the importer's written statement, or by entering in electronic format information contained in the statement, into the U.S. Customs and Border Protection electronic data collection system, describing the use to be made of the vehicle or equipment item. If use on the public roads is an integral part of the purpose for which the vehicle or equipment item is imported, the statement shall describe the purpose which makes such use necessary, state the estimated period of time during which use of the vehicle or equipment item on the public roads is necessary, and state the intended means of final disposition (and disposition date) of the vehicle or equipment item after completion of the purpose for which it is imported.

(g) A declaration made pursuant to § 591.5(l) shall be accompanied by the following documentation:

(1) A paper copy of the Administrator's permission letter, or for electronic reporting by entering the unique identifying number of the Administrator's permission letter into a U.S. Customs and Border Protection electronic data collection system, authorizing importation pursuant to § 591.5(l). A Registered Importer seeking to import a motor vehicle pursuant to this section must submit, in advance of such importation, a written request to the Administrator containing a full and complete statement identifying the vehicle, its original manufacturer, model, model year (if assigned), date of manufacture, and VIN. The statement must also declare that the specific purpose of importing this vehicle is to prepare a petition to the Administrator requesting a determination whether the vehicle is eligible for importation pursuant to Part 593 and that the importer has filed, or intends to file within 180 days of the vehicle's entry date, a petition pursuant to § 593.5. The request must be addressed to: Director, Office of Vehicle Safety Compliance, Fourth Floor, Room W43–481, Mail Code NVS–220, 1200 New Jersey Avenue SE., Washington, DC 20590.

(2) [Reserved]

PART 592—REGISTERED IMPORTERS OF VEHICLES NOT ORIGINALLY MANUFACTURED TO CONFORM TO THE FEDERAL MOTOR VEHICLE SAFETY STANDARDS

■ 4. The authority citation for Part 592 is revised to read as follows:

Authority: Pub. L. 100–562, 49 U.S.C. 322(a), 30117, 30141–30147; delegation of authority at 49 CFR 1.95.

■ 5. Amend § 592.6 by revising paragraph (a) to read as follows:

§ 592. Duties of a registered importer.

* * * * *

(a) With respect to each motor vehicle that it imports into the United States, assure that the Administrator has decided that the vehicle is eligible for importation pursuant to Part 593 of this chapter prior to such importation. The Registered Importer must also bring such vehicle into conformity with all applicable Federal motor vehicle safety standards prescribed under Part 571 of this chapter and the bumper standard

prescribed under Part 581 of this chapter, if applicable, and furnish certification to the Administrator pursuant to paragraph (e) of this section, within 120 calendar days after such entry. For each motor vehicle, the Registered Importer must furnish to the Secretary of Homeland Security at the time of importation a bond in an amount equal to 150 percent of the dutiable value of the vehicle, as determined by the Secretary of Homeland Security, to ensure that such vehicle either will be brought into conformity with all applicable Federal motor vehicle safety and bumper standards or will be exported (at no cost to the United States) by the importer or the Secretary of Homeland Security or abandoned to the United States. However, if the Registered Importer has procured a continuous entry bond, it must furnish the Administrator with such bond, and must furnish the Secretary of Homeland Security (acting on behalf of the Administrator) with a paper or electronic copy, in a format accepted by U.S. Customs and Border Protection, of such bond at the time of importation of each motor vehicle.

* * * * *

Issued in Washington, DC, on August 25, 2015 under authority delegated in 49 CFR Part 1.95.

Mark R. Rosekind,

Administrator.

[FR Doc. 2015–21505 Filed 9–1–15; 8:45 am]

BILLING CODE 4910–59–P

DEPARTMENT OF COMMERCE

National Oceanic and Atmospheric Administration

50 CFR Part 648

[Docket No. 140117052–4402–02]

RIN 0648–XE096

Fisheries of the Northeastern United States; Atlantic Bluefish Fishery; Quota Transfer

AGENCY: National Marine Fisheries Service (NMFS), National Oceanic and Atmospheric Administration (NOAA), Commerce.

ACTION: Temporary rule; quota transfer.

SUMMARY: NMFS approves the transfer of 2015 commercial Atlantic bluefish quota from the State of North Carolina and the Commonwealth of Virginia to the State of Rhode Island. These transfers comply with the Bluefish Fishery Management Plan quota transfer provisions, specified in federal regulations. This announcement also informs the public of the revised commercial quota for each state involved.

DATES: Effective September 1, 2015, through December 31, 2015.

FOR FURTHER INFORMATION CONTACT: Reid Lichwell, Fishery Management Specialist, (978) 281–9112.

SUPPLEMENTARY INFORMATION: Regulations governing the bluefish fishery are found at 50 CFR part 648. The regulations require annual specification of a commercial quota that is apportioned among the coastal states from Florida through Maine. The process to set the annual commercial quota and the percent allocated to each state are described in § 648.162.

The final rule implementing Amendment 1 to the Bluefish Fishery Management Plan published in the **Federal Register** on July 26, 2000 (65 FR 45844), provided a mechanism for transferring bluefish quota from one state to another. Two or more states, under mutual agreement and with the concurrence of the Administrator, Greater Atlantic Region, NMFS (Regional Administrator), can transfer or combine bluefish commercial quota under § 648.162(e). The Regional Administrator is required to consider the criteria in § 648.162(e) in the evaluation of requests for quota transfers or combinations.

North Carolina has agreed to transfer 100,000 lb (45,359 kg), and Virginia 50,000 lb (22,680 kg) of their 2015 commercial bluefish quotas to Rhode Island. This transfer was requested by state officials in Rhode Island to ensure their commercial bluefish quota is not exceeded. The Regional Administrator has determined that the criteria set forth in § 648.162(e)(1) are met and approves these transfers. The revised bluefish quotas for calendar year 2015 are: North Carolina, 1,380,371 lb (626,126 kg); Virginia, 422,629 lb (191,701 kg); and Rhode Island 506,826 lb (229,892 kg), based on quota defined in the final 2015 Atlantic Bluefish Specifications (80 FR 46848, published on August 6, 2015).

Classification

This action is taken under 50 CFR part 648 and is exempt from review under Executive Order 12866.

Authority: 16 U.S.C. 1801 *et seq.*

Dated: August 27, 2015.

Alan D. Risenhoover,

Director, Office of Sustainable Fisheries, National Marine Fisheries Service.

[FR Doc. 2015–21638 Filed 9–1–15; 8:45 am]

BILLING CODE 3510–22–P

DEPARTMENT OF COMMERCE

National Oceanic and Atmospheric Administration

50 CFR Part 660

[Docket No. 150316270–5270–01]

RIN 0648–XE121

Fisheries Off West Coast States; Modifications of the West Coast Commercial and Recreational Salmon Fisheries; Inseason Actions #22 through #29

AGENCY: National Marine Fisheries Service (NMFS), National Oceanic and Atmospheric Administration (NOAA), Commerce.

ACTION: Modification of fishing seasons; request for comments.

SUMMARY: NMFS announces eight inseason actions in the ocean salmon fisheries. These inseason actions modified the commercial and recreational salmon fisheries in the area from the U.S./Canada border to the U.S./Mexico border.

DATES: The effective dates for the inseason actions are set out in this document under the heading Inseason Actions. Comments will be accepted through September 17, 2015.

ADDRESSES: You may submit comments, identified by NOAA–NMFS–2015–0001, by any one of the following methods:

- *Electronic Submissions:* Submit all electronic public comments via the Federal eRulemaking Portal. Go to *www.regulations.gov/#!docketDetail;D=NOAA-NMFS-2015-0001,* click the ''Comment Now!'' icon, complete the required fields, and enter or attach your comments.
- *Mail:* William W. Stelle, Jr., Regional Administrator, West Coast Region, NMFS, 7600 Sand Point Way NE, Seattle, WA 98115–6349.

Instructions: Comments sent by any other method, to any other address or individual, or received after the end of the comment period, may not be considered by NMFS. All comments received are a part of the public record and will generally be posted for public viewing on *www.regulations.gov* without change. All personal identifying information (*e.g.,* name, address, etc.), confidential business information, or otherwise sensitive information submitted voluntarily by the sender will be publicly accessible. NMFS will accept anonymous comments (enter ''N/A'' in the required fields if you wish to remain anonymous).

FOR FURTHER INFORMATION CONTACT: Peggy Mundy at 206–526–4323.

SUPPLEMENTARY INFORMATION:

Background

In the 2015 annual management measures for ocean salmon fisheries (80 FR 25611, May 5, 2015), NMFS announced the commercial and recreational fisheries in the area from the U.S./Canada border to the U.S./Mexico border, beginning May 1, 2015, and 2016 salmon fisheries opening earlier than May 1, 2016. NMFS is authorized to implement inseason management actions to modify fishing seasons and quotas as necessary to provide fishing opportunity while meeting management objectives for the affected species (50 CFR 660.409). Inseason actions in the salmon fishery may be taken directly by NMFS (50 CFR 660.409(a)—Fixed inseason management provisions) or upon consultation with the Pacific Fishery Management Council (Council) and the appropriate State Directors (50 CFR 660.409(b)—Flexible inseason management provisions). The state management agencies that participated in the consultations described in this document were: Oregon Department of Fish and Wildlife (ODFW) and Washington Department of Fish and Wildlife (WDFW).

Management of the salmon fisheries is generally divided into two geographic areas: north of Cape Falcon (U.S./Canada border to Cape Falcon, OR) and south of Cape Falcon (Cape Falcon, OR, to the U.S./Mexico border). The inseason actions reported in this document affect fisheries north and south of Cape Falcon. All times mentioned refer to Pacific daylight time.

Inseason Actions

Inseason Action #22

Description of action: Inseason action #22 adjusted the daily bag limit in the recreational salmon fishery in the Westport Subarea (Queets River, WA to Leadbetter Point, WA) to allow retention of two Chinook salmon; previously, only one Chinook salmon could be retained daily.

Effective dates: Inseason action #22 took effect on August 15, 2015, and remains in effect until the end of the 2015 recreational salmon fishery, or until modified by further inseason action.

Reason and authorization for the action: The Regional Administrator (RA) considered fishery effort and Chinook salmon landings to date, and determined that sufficient quota remained to allow an increase in the Chinook salmon bag limit without exceeding the quota. Inseason action to modify recreational bag limits is authorized by 50 CFR 660.409(b)(1)(iii).

Consultation date and participants: Consultation on inseason action #22 occurred on August 12, 2015. Participants in this consultation were staff from NMFS, Council, WDFW, and ODFW.

Inseason Action #23

Description of action: Inseason action #23 modified the daily bag limit in the recreational salmon fishery in the Neah Bay Subarea (U.S./Canada border to Cape Alava, WA) to allow retention of one Chinook salmon per day for two days, beginning at 12:01 a.m., August 14, 2015 through 11:59 p.m., August 15, 2015. Effective 12:01 a.m., August 16, 2015, non-retention of Chinook salmon in this subarea resumed. This action superseded inseason action #18.

Effective dates: Inseason action #23 took effect on August 14, 2015, and remained in effect until it was superseded by inseason action #28 on August 21, 2015.

Reason and authorization for the action: Under inseason action #18, which took effect August 2, 2015, NMFS implemented non-retention of Chinook salmon in the recreational salmon fishery in the Neah Bay Subarea, to prevent exceeding the subarea guideline for Chinook salmon harvest. In the consultation on August 12, 2015, that lead to inseason action #23, the RA considered fishery effort and updated Chinook salmon landings to date and determined that the subarea guideline had sufficient Chinook salmon available to allow limited Chinook salmon retention. This action also made regulations in the Neah Bay Subarea consistent with regulations in adjacent state waters that allow Chinook retention through August 15, 2015. Inseason action to modify recreational bag limits is authorized by 50 CFR 660.409(b)(1)(iii).

Consultation date and participants: Consultation on inseason action #23 occurred on August 12, 2015. Participants in this consultation were staff from NMFS, Council, WDFW, and ODFW.

Inseason Action #24

Description of action: Inseason action #24 adjusted the summer quota (July through September) for the commercial salmon fishery north of Cape Falcon. Unutilized quota from the spring season was rolled over to the summer season. The adjusted summer quota is 27,830 Chinook salmon.

Effective dates: Inseason action #24 took effect August 12, 2015, and remains in effect until the end of the 2015 commercial salmon fishery.

Reason and authorization for the action: The quota for the spring commercial salmon fishing season north of Cape Falcon was 40,200 Chinook salmon, of which, 39,170 Chinook salmon were harvested, leaving 1,030 Chinook salmon unutilized. The STT calculated the quota rollover from the spring fishing season to the summer fishing season on an impact-neutral basis for the lower Columbia River natural tule Chinook salmon stock, and determined the rollover could be implemented on a 1 to 1 basis, with no adjustment needed. Therefore, 1,030 Chinook salmon were added to the summer quota that was set preseason at 26,800 Chinook salmon, resulting in an adjusted summer quota of 27,830 Chinook salmon. Modification of quotas and/or fishing seasons is authorized by 50 CFR 660.409(b)(1)(i).

Consultation date and participants: Consultation on inseason action #24 occurred on August 12, 2015. Participants in this consultation were staff from NMFS, Council, WDFW, and ODFW.

Inseason Action #25

Description of action: Inseason action #25 modified the landing and possession limit for Chinook salmon in the commercial salmon fishery north of Cape Falcon to 50 Chinook salmon per vessel per open period in all areas north of Cape Falcon. This action superseded inseason action #15 (80 FR 43336).

Effective dates: Inseason action #25 took effect on August 14, 2015, and remained in effect until it was superseded by inseason action #29 on August 21, 2015.

Reason and authorization for the action: The annual management measures (80 FR 25611) set the landing and possession limits for the summer commercial salmon fishery north of Cape Falcon at 50 Chinook salmon and 50 marked coho per vessel per open period. Inseason action #15, which took effect on July 10, 2015 (80 FR 43336), modified the Chinook salmon landing and possession limit to 60 Chinook salmon north of the Queets River or 75 Chinook salmon south of the Queets River. On August 12, the RA considered fishery effort and Chinook salmon and coho landings to date, and determined that adjusting the Chinook salmon landing limit to 50 Chinook salmon per vessel per open period, in all areas north of Cape Falcon, would allow access to remaining quota without exceeding the quota. Inseason action to modify quotas and/or fishing seasons is authorized by 50 CFR 660.409(b)(1)(i).

Consultation date and participants: Consultation on inseason action #25 occurred on August 12, 2015. Participants in this consultation were staff from NMFS, Council, WDFW, and ODFW.

Inseason Action #26

Description of action: Inseason action #26 adjusted the quota for the Cape Falcon to Humbug Mountain recreational non-mark-selective coho fishery that begins September 4, 2015. Unutilized quota from the June through August mark-selective coho fishery was rolled over to the non-mark-selective coho fishery on an impact-neutral basis. The adjusted quota is 20,700 non-mark-selective coho.

Effective dates: Inseason action #26 is effective from September 4, 2015 to the end of the 2015 recreational salmon fishery.

Reason and authorization for the action: The annual management measures (80 FR 25611) provide that any remainder of the quota from the Cape Falcon to Oregon/California border mark-selective coho fishery (June 27, 2015 through August 9, 2015) will be transferred on an impact-neutral basis to the September non-selective coho quota from Cape Falcon to Humbug Mountain. The mark-selective coho fishery had 40,092 unutilized mark-selective coho. The STT calculated that the impact-neutral rollover of that remainder from the mark-selective coho fishery yielded 8,219 non-mark-selective coho. The state of Oregon requested a reduced rollover of 8,200 non-mark-selective coho, to allow a buffer for assumed, but not yet accounted impacts. The RA concurred with the rollover, which adjusted the non-mark-selective quota from 12,500 to 20,700 non-mark-selective coho. Modification of quotas and/or fishing seasons is authorized by 50 CFR 660.409(b)(1)(i).

Consultation date and participants: Consultation on inseason action #26 occurred on August 19, 2015. Participants in this consultation were staff from NMFS, Council, WDFW, and ODFW.

Inseason Action #27

Description of action: Inseason action #27 terminated retention of Pacific halibut caught incidental to the commercial salmon fishery, at 11:59 p.m., August 20, 2015, due to attainment of the allocation that was set by the International Pacific Halibut Commission (IPHC). All halibut must be landed within 24 hours of this closure.

Effective dates: Inseason action #27 took effect August 20, 2015 and remains in effect through the end of the 2015 commercial salmon fishery.

Reason and authorization for the action: The RA considered landings and effort to date, and took action to terminate retention of Pacific halibut caught incidental to the commercial salmon fishery due to projected attainment of the allocation set by the IPHC. Inseason action to modify fishing seasons is authorized by 50 CFR 660.409(b)(1)(i).

Consultation date and participants: Consultation on inseason action #27 occurred on August 19, 2015. Participants in this consultation were staff from NMFS, Council, WDFW, ODFW, and IPHC.

Inseason Action #28

Description of action: Inseason action #28 modified the daily bag limit in the recreational salmon fishery in the Neah Bay Subarea (U.S./Canada border to Cape Alava, WA) to allow retention of one Chinook salmon per day. This action superseded inseason action #23.

Effective dates: Inseason action #28 took effect August 21, 2015, and remains in effect until the end of the 2015 recreational salmon fishery, or until modified by further inseason action.

Reason and authorization for the action: The RA considered landings and effort to date and took this action to allow access to remaining Chinook salmon without exceeding the guideline in the Neah Bay Subarea. Inseason action to modify recreational bag limits is authorized by 50 CFR 660.409(b)(1)(iii).

Consultation date and participants: Consultation on inseason action #28 occurred on August 19, 2015. Participants in this consultation were staff from NMFS, Council, WDFW, and ODFW.

Inseason Action #29

Description of action: Inseason action #29 modified the landing and possession limit for Chinook salmon in the commercial salmon fishery north of Cape Falcon to 40 Chinook salmon per vessel per open period in all areas north of Cape Falcon. This action superseded inseason action #25.

Effective dates: Inseason action #29 took effect on August 21, 2015, and remains in effect until the end of the 2015 commercial salmon fishery, or until modified by further inseason action.

Reason and authorization for the action: The RA considered fishery effort and Chinook salmon and coho landings to date, and determined that adjusting the Chinook salmon landing limit would allow access to remaining quota without exceeding the quota. Inseason action to modify quotas and/or fishing seasons is authorized by 50 CFR 660.409(b)(1)(i).

Consultation date and participants: Consultation on inseason action #28 occurred on August 19, 2015. Participants in this consultation were staff from NMFS, Council, WDFW, and ODFW.

All other restrictions and regulations remain in effect as announced for the 2015 ocean salmon fisheries and 2016 salmon fisheries opening prior to May 1, 2016 (80 FR 25611, May 5, 2015).

The RA determined that the best available information indicated that halibut, coho, and Chinook salmon catch to date and fishery effort supported the above inseason actions recommended by the states of Washington and Oregon. The states manage the fisheries in state waters adjacent to the areas of the U.S. exclusive economic zone in accordance with these Federal actions. As provided by the inseason notice procedures of 50 CFR 660.411, actual notice of the described regulatory actions was given, prior to the time the action was effective, by telephone hotline numbers 206–526–6667 and 800–662–9825, and by U.S. Coast Guard Notice to Mariners broadcasts on Channel 16 VHF–FM and 2182 kHz.

Classification

The Assistant Administrator for Fisheries, NOAA (AA), finds that good cause exists for this notification to be issued without affording prior notice and opportunity for public comment under 5 U.S.C. 553(b)(B) because such notification would be impracticable. As previously noted, actual notice of the regulatory actions was provided to fishers through telephone hotline and radio notification. These actions comply with the requirements of the annual management measures for ocean salmon fisheries (80 FR 25611, May 5, 2015), the West Coast Salmon Fishery Management Plan (Salmon FMP), and regulations implementing the Salmon FMP, 50 CFR 660.409 and 660.411. Prior notice and opportunity for public comment was impracticable because NMFS and the state agencies had insufficient time to provide for prior notice and the opportunity for public comment between the time Chinook salmon catch and effort assessments and projections were developed and fisheries impacts were calculated, and the time the fishery modifications had to be implemented in order to ensure that fisheries are managed based on the best available scientific information,

ensuring that conservation objectives and ESA consultation standards are not exceeded. The AA also finds good cause to waive the 30-day delay in effectiveness required under 5 U.S.C. 553(d)(3), as a delay in effectiveness of these actions would allow fishing at levels inconsistent with the goals of the Salmon FMP and the current management measures.

These actions are authorized by 50 CFR 660.409 and 660.411 and are exempt from review under Executive Order 12866.

Authority: 16 U.S.C. 1801 *et seq.*

Dated: August 28, 2015.

Emily H. Menashes,

Acting Director, Office of Sustainable Fisheries, National Marine Fisheries Service.

[FR Doc. 2015–21770 Filed 9–1–15; 8:45 am]

BILLING CODE 3510–22–P

Proposed Rules

Federal Register
Vol. 80, No. 170
Wednesday, September 2, 2015

This section of the FEDERAL REGISTER contains notices to the public of the proposed issuance of rules and regulations. The purpose of these notices is to give interested persons an opportunity to participate in the rule making prior to the adoption of the final rules.

DEPARTMENT OF HOMELAND SECURITY

Office of the Secretary

6 CFR Part 5

[Docket No. DHS–2015–0053]

Privacy Act of 1974: Implementation of Exemptions; Department of Homeland Security U.S. Customs and Border Protection—DHS/CBP–020 Export Information System (EIS) System of Records System of Records

AGENCY: Privacy Office, Department of Homeland Security.

ACTION: Notice of proposed rulemaking.

SUMMARY: The Department of Homeland Security is giving concurrent notice for the newly established ''Department of Homeland Security/U.S. Customs and Border Protection—DHS/CBP–020, Export Information System, System of Records'' and this proposed rulemaking. This system of records will collect and maintain records on cargo exported from the United States, as well as information pertaining to the filer, transmitter, exporter, U.S. Principal Party in Interest (USPPI), freight forwarder, shipper, consignee, other U.S. authorized agent filing for the USPPI, and individuals related to the specific cargo that is the subject of the export transaction. In accordance with the Privacy Act of 1974 and this proposed rulemaking, the Department of Homeland Security concurrently proposes to exempt portions of the system of records from one or more provisions of the Privacy Act because of criminal, civil, and administrative enforcement requirements.

DATES: Comments must be received on or before October 2, 2015.

ADDRESSES: You may submit comments, identified by docket number DHS–2015–0053, by one of the following methods:

- *Federal e-Rulemaking Portal: http://www.regulations.gov.* Follow the instructions for submitting comments.
- *Fax:* 202–343–4010.
- *Mail:* Karen L. Neuman, Chief Privacy Officer, Privacy Office, Department of Homeland Security, Washington, DC 20528.

Instructions: All submissions received must include the agency name and docket number for this notice. All comments received will be posted without change to *http://www.regulations.gov,* including any personal information provided.

Docket: For access to the docket to read background documents or comments received, go to *http://www.regulations.gov.*

FOR FURTHER INFORMATION CONTACT: For general questions please contact: John Connors (202–344–1610), CBP Privacy Officer, U.S. Customs and Border Protection, Department of Homeland Security, Washington, DC 20229. For privacy issues please contact: Karen L. Neuman, (202–343–1717), Chief Privacy Officer, Privacy Office, Department of Homeland Security, Washington, DC 20528.

SUPPLEMENTARY INFORMATION:

I. Background

In accordance with the Privacy Act of 1974, 5 U.S.C. 552a, the Department of Homeland Security (DHS), U.S. Customs and Border Protection (CBP) proposes to establish a new DHS system of records titled, ''DHS/CBP–020 Export Information System (EIS) System of Records.'' The system of records is used by DHS/CBP to collect, use, and maintain paper and electronic records required to track, control, and process cargo exported from the United States. EIS allows CBP to enhance national security, enforce U.S. law, and facilitate legitimate international trade.

DHS is issuing this Notice of Proposed Rulemaking to exempt this system of records from certain provisions of the Privacy Act. This system will be included in DHS's inventory of record systems. Elsewhere in the **Federal Register**, CBP is publishing a system of records notice (SORN) for EIS because the exporting community must report export data that contains personally identifiable information (PII) to CBP.

Subsection (a) of Section 343 of the Trade Act of 2002 (19 U.S.C. 2071) mandates that the Secretary of Homeland Security (formerly the Secretary of Treasury) collect cargo information ''through an electronic data interchange system,'' prior to the departure of the cargo from the United States by any mode of commercial transportation (*see* 19 U.S.C. 2071 note.) Pursuant to statute, CBP promulgated a regulation requiring pre-departure filing of electronic information to allow CBP to examine the data before cargo leaves the United States (*see Electronic Information for Outward Cargo Required in Advance of Departure* (19 CFR 192.14)). CBP required exporters to provide electronic cargo information through the Automated Export System (AES) to avoid redundancy as specifically mandated by Congress (*see Mandatory Pre-Departure Filing of Export Cargo Information Through the Automated Export System,* 73 FR 32466 (June 9, 2008)).

To comply with the regulation, exporters must file the Electronic Export Information (EEI), formerly the Shipper's Export Declaration (SED) [1] when the value of the commodity classified under each individual Schedule B number is over $2,500 or if a validated export license is required to export the commodity. The exporter is responsible for preparing the EEI and the carrier files it with CBP through the AES or AES Direct (operated by the U.S. Census Bureau). Cargo information collected by CBP includes PII such as a shipper's name, address, and Taxpayer Identification Number (TIN). According to the U.S. Census Bureau, in a standard export transaction, it is the U.S. Principal Party In Interest's (USPPI) responsibility to prepare the EEI. However, the USPPI can give the freight forwarder a power of attorney (POA) or written statement (WA) authorizing them to prepare and file the EEI on their behalf. In a routed export transaction, however, the Foreign Principal Party in Interest (FPPI) must provide a POA or WA to prepare the EEI to either the USPPI or a U.S. Authorized Agent.

[1] 13 U.S.C. 301 (The Census Bureau root authority to collect the SED, now EEI); pursuant to section 303, CBP (then U.S. Customs Service, Dept. of Treasury) is required to develop an automated system for collecting this export data. Through title 13, the Census Bureau holds stewardship of export data. Under the Trade Act of 2002 (19 U.S.C. 2071 note), CBP is required to collect an export manifest containing a declaration identifying the parties to the transaction, a physical description of the commodity, its quantity, mode of conveyance, and ports of origin and destination. Through title 19, CBP, similarly, holds stewardship of export data.

The Internal Transaction Number (ITN) or exemption citation must be provided by the EEI filer to the carrier when the goods are presented for export. The carrier is responsible for providing the ITN or exemption citation to CBP. CBP Officers will verify that the ITN or exemption citations clearly stated on export documents and provided to the carrier(s) within the prescribed timeframes. The procedures for filing vary by cargo type (vessel, truck, air, or rail). The timeframes for filing varies according to the method of transportation for pre-departure filing (State Department United States Munitions List (USML) shipments, and non-USML shipments).

DHS/CBP is publishing this system of records notice to provide notice of the records maintained by CBP concerning individuals who participate in exporting goods from the United States. CBP previously published a Privacy Impact Assessment (PIA) for EIS last year.[2]

Consistent with DHS's information-sharing mission, information stored in the DHS/CBP–020 EIS System of Records may be shared with other DHS components that have a need to know the information to carry out their national security, law enforcement, immigration, intelligence, or other homeland security functions. In addition, information may be shared with appropriate federal, state, local, tribal, territorial, foreign, or international government agencies or other parties consistent with the routine uses set forth in this SORN. In particular, information may be shared with the Department of Commerce, Bureau of Industry and Science, and the Department of State, Office of Defense Trade Controls, relating to compliance and enforcement of licenses issued by these respective agencies concerning the controlled nature or sensitive technology present in the exported commodities (*e.g.,* certain central processing unit designs, weapons systems).

II. Privacy Act

The Privacy Act embodies fair information practice principles in a statutory framework governing the means by which Federal Government agencies collect, maintain, use, and disseminate personally identifiable information. The Privacy Act applies to information that is maintained in a ''system of records.'' A ''system of records'' is a group of any records under the control of an agency from which information is retrieved by the name of the individual or by some identifying number, symbol, or other identifying particular assigned to the individual. In the Privacy Act, an individual is defined to encompass U.S. citizens and lawful permanent residents. As a matter of policy, DHS extends administrative Privacy Act protections to all persons where systems of records maintain information on U.S. citizens, lawful permanent residents, and non-immigrant aliens.

The Privacy Act allows government agencies to exempt certain records from the access and amendment provisions. If an agency claims an exemption, however, it must issue a Notice of Proposed Rulemaking to make clear to the public the reasons why a particular exemption is claimed.

DHS is claiming exemptions from certain requirements of the Privacy Act for DHS/CBP–020 Export Information System, System of Records.

No exemption shall be asserted with respect to information maintained in the system as it relates to data submitted by or on behalf of a person who travels from the United States, nor shall an exemption be asserted with respect to the resulting determination (authorized to travel, not authorized to travel, pending).

Some information in DHS/CBP–020 EIS System of Records relates to official DHS national security, law enforcement, and intelligence activities. These exemptions are needed to protect information relating to DHS activities from disclosure to subjects or others related to these activities. Specifically, the exemptions are required for information pertaining to the accounting of disclosures made from this system to other law enforcement or intelligence agencies (federal, state, local, foreign, international, or tribal) in accordance with the published routine uses or statutory basis for disclosure pursuant to 5 U.S.C. 552a(b). The exemptions will preclude subjects from frustrating official national security, law enforcement, or intelligence processes. Disclosure of information to the subject of the inquiry could also permit the subject to avoid detection or apprehension.

In appropriate circumstances, where compliance would not appear to interfere with or adversely affect the law enforcement purposes of this system and the overall law enforcement process, the applicable exemptions may be waived on a case by case basis.

A notice of system of records for DHS/CBP–020 EIS System of Records is also published in this issue of the **Federal Register**.

[2] *http://www.dhs.gov/publication/export-information-system-eis.*

List of Subjects in 6 CFR Part 5

Freedom of information; Privacy.

For the reasons stated in the preamble, DHS proposes to amend chapter I of title 6, Code of Federal Regulations, as follows:

PART 5—DISCLOSURE OF RECORDS AND INFORMATION

■ 1. The authority citation for part 5 continues to read as follows:

Authority: Pub. L. 107–296, 116 Stat. 2135; (6 U.S.C. 101 *et seq.*); 5 U.S.C. 301. Subpart A also issued under 5 U.S.C. 552. Subpart B also issued under 5 U.S.C. 552a.

■ 2. Add, at the end of appendix C to part 5, paragraph 74 to read as follows:

Appendix C to Part 5—DHS Systems of Records Exempt From the Privacy Act.

* * * * *

74. DHS/CBP–020 Export Information System (EIS). A portion of the following system of records is exempt from 5 U.S.C. 552a(c)(3), (e)(8), and (g)(1) pursuant to 5 U.S.C. 552a(j)(2), and from 5 U.S.C. 552a(c)(3) pursuant to 5 U.S.C. 552a(k)(2). Further, no exemption shall be asserted with respect to information maintained in the system as it relates to data submitted by or on behalf of a person who travels from the United States and crosses the border, nor shall an exemption be asserted with respect to the resulting determination (approval or denial). After conferring with the appropriate component or agency, DHS may waive applicable exemptions in appropriate circumstances and where it would not appear to interfere with or adversely affect the law enforcement purposes of the systems from which the information is recompiled or in which it is contained. Exemptions from the above particular subsections are justified, on a case-by-case basis to be determined at the time a request is made, when information in this system of records is may impede a law enforcement, intelligence activities and national security investigation:

(a) From subsection (c)(3) (Accounting for Disclosures) because making available to a record subject the accounting of disclosures from records concerning him or her would specifically reveal any investigative interest in the individual. Revealing this information could reasonably be expected to compromise ongoing efforts to investigate a violation of U.S. law, including investigations of a known or suspected terrorist, by notifying the record subject that he or she is under investigation. This information could also permit the record subject to take measures to impede the investigation, *e.g.,* destroy evidence, intimidate potential witnesses, or flee the area to avoid or impede the investigation.

(b) From subsection (e)(8) (Notice on Individuals) because to require individual notice of disclosure of information due to compulsory legal process would pose an impossible administrative burden on DHS and other agencies and could alert the subjects of counterterrorism or law enforcement investigations to the fact of

those investigations when not previously known.

(c) From subsection (g)(1) (Civil Remedies) to the extent that the system is exempt from other specific subsections of the Privacy Act.

Dated: August 19, 2015.

Karen L. Neuman,

Chief Privacy Officer, Department of Homeland Security.

[FR Doc. 2015–21674 Filed 9–1–15; 8:45 am]

BILLING CODE 9111–14–P

DEPARTMENT OF AGRICULTURE

Agricultural Marketing Service

7 CFR Part 51

[Doc. Number AMS–FV–14–0090, FV–15–327]

U.S. Standards for Grades of Fresh Fruits and Vegetables, Fruits and Vegetables for Processing, Nuts, and Specialty Crops

AGENCY: Agricultural Marketing Service, USDA.

ACTION: Notice.

SUMMARY: The Agricultural Marketing Service (AMS) of the U.S. Department of Agriculture (USDA) proposes revising 46 U.S. Standards for Grades of fresh fruits and vegetables, fruits and vegetables for processing, nuts, and specialty crops by removing the ''Unclassified'' category from each standard. This would bring these grade standards in line with other recently amended standards and current terminology. This revision would update the standards to more accurately represent today's marketing practices and provide the industry with greater flexibility.

DATES: Comments must be received by November 2, 2015.

ADDRESSES: Interested persons are invited to submit written comments to the Standardization Branch, Specialty Crops Inspection Division, Fruit and Vegetable Program, Agricultural Marketing Service, U.S. Department of Agriculture, National Training and Development Center, Riverside Business Park, 100 Riverside Parkway, Suite 101, Fredericksburg, VA 22406; Fax: (540) 361–1199, or on the web at: *www.regulations.gov.* The current U.S. Grade Standards for the 46 affected commodities are available on the AMS Web site at *www.ams.usda.gov/scistandardization.* Comments should reference the dates and page number of this issue of the **Federal Register**. Comments will be made available for public inspection in the above office during regular business hours and can also be viewed, as submitted, with any personal information provided, on the *www.regulations.gov* Web site.

FOR FURTHER INFORMATION CONTACT: Olivia Vernon, Standardization Branch, Specialty Crops Inspection Division, at the address above or by telephone at (540) 361–2743; fax (540) 361–1199; or, email *olivia.vernon@ams.usda.gov.* The current U.S. Standards for Grades are available on the AMS Web site at *www.ams.usda.gov/scistandardization.*

SUPPLEMENTARY INFORMATION: Section 203(c) of the Agricultural Marketing Act of 1946 (7 U.S.C. 1621–1627), as amended, directs and authorizes the Secretary of Agriculture ''to develop and improve standards of quality, condition, quantity, grade and packaging, and recommend and demonstrate such standards in order to encourage uniformity and consistency in commercial practices.'' AMS is committed to carrying out this authority in a manner that facilitates the marketing of agricultural commodities and makes copies of official grade standards available upon request. The U.S. Standards for Grades of Fruits and Vegetables not connected with Federal Marketing Orders or U.S. import requirements no longer appear in the Code of Federal Regulations, but are maintained by USDA, AMS, Fruit and Vegetable Program, and are available on the Internet at *www.ams.usda.gov/scihome.*

AMS is revising these voluntary U.S. standards for grades using the procedures in Part 36, Title 7 of the Code of Federal Regulations (7 CFR part 36).

Background

AMS proposes to eliminate the ''Unclassified'' section in 46 U.S. grade standards that were issued under the Agricultural Marketing Act of 1946.

The fresh fruit and vegetable grade standards covered by these proposed changes are: Sweet anise, lima beans, beets, Brussels sprouts, cabbage, celery, cucumbers, endive, garlic, collard greens or broccoli greens, mustard greens and turnip greens, honey dew and honey ball type melons, horseradish roots, greenhouse leaf lettuce, mushrooms, common green onions, onion sets, parsnips, fresh peas, southern peas, rhubarb, romaine, bunched shallots, spinach plants, summer squash, turnips or rutabagas, dewberries and blackberries, American grapes, juice grapes, Persian limes, summer and fall pears, winter pears, and raspberries.

The fresh fruit and vegetable for processing grade standards covered by these proposed changes are spinach, berries, blueberries, red sour cherries for manufacture, sweet cherries for canning or freezing, cranberries for processing, currants, raspberries, growers' stock strawberries for manufacture, and washed and sorted strawberries for freezing.

The nut and specialty crops grade standards covered by these proposed changes are: Brazil nuts in the shell, cut peonies in the bud, and tomato plants.

AMS continually reviews all fruit, vegetable, nut and specialty crop grade standards to ensure their usefulness to the industry. AMS has identified that the ''Unclassified'' section needs to be eliminated from the 46 aforementioned U.S. Standards for Grade. The ''Unclassified'' category is not a grade and only serves to show that no grade has been applied to the lot. It is no longer considered necessary.

This notice provides for a 60-day comment period for interested parties to comment on the proposed revisions in the standards.

Authority: 7 U.S.C. 1621–1627.

Dated: August 28, 2015.

Rex A. Barnes,

Associate Administrator, Agricultural Marketing Service.

[FR Doc. 2015–21836 Filed 9–1–15; 8:45 am]

BILLING CODE 3410–02–P

DEPARTMENT OF AGRICULTURE

Agricultural Research Service

7 CFR Part 504

RIN 0518–AA05

Changes to Fees and Payment Methods

AGENCY: Agricultural Research Service, USDA.

ACTION: Proposed rule.

SUMMARY: This document proposes an increase in the fees the Agricultural Research Service's (ARS) Patent Culture Collection charges, and a revision of the method of payment.

DATES: Submits comments on or before November 2, 2015.

ADDRESSES: See **FOR FURTHER INFORMATION CONTACT** section below.

FOR FURTHER INFORMATION CONTACT: Jeffrey Kurtz, ARS—Budget and Program Management Staff, George Washington Carver Center, 5601 Sunnyside Avenue, Room 4–1106, Beltsville, Maryland 20705, telephone: (301) 504–4494, email: *jeff.kurtz@ars.usda.gov.*

SUPPLEMENTARY INFORMATION: Microbial-based agriculture and biotechnology rely on superior production strains, new strains with novel characteristics, and reference strains for comparative purposes. Such strains are often difficult to acquire or are cost prohibitive for many researchers. ARS has a staff dedicated to the acquisition and distribution of microbial germplasm in which patented strains can be deposited in and distributed from its Patent Culture Collection for a one-time fee to cover maintenance and distribution costs.

ARS' Patent Culture Collection receives about 120 patent deposits per year, and distributes about 450 cultures per year. Nearly all of the accessions and distributions are requested by companies, universities, or Government agencies. Currently, ARS charges $500 for each microbial culture deposit, as set forth in 7 CFR 504.2(a). For each microbial culture distribution ARS charges $20, as set forth in 7 CFR 504.2(b). The current fees, which were established in 1985, do not reflect the actual costs of providing materials and services as set forth in the regulation. ARS proposes to increase these fees to reflect their actual costs of $670 and $40, respectively, and to apply the distribution fee to all patent deposits regardless of the date of the deposit. This will not include back billing for deposits.

ARS also requests to add *pay.gov* as a method of paying deposit and distributions fees. Currently, payment to the Department of Agriculture can only be made by check, draft, or money order (7 CFR 504.3(b)).

The proposed increased fees will enable ARS' Patent Culture Collection to continue its mission of supporting microbiological research and biotechnological innovation, and serve as a repository where patented microbial strains can be deposited and distributed to the scientific community.

The proposed new fee structure and method of receiving payments will require 7 CFR 504.2(a) and (b) and 504.3(b) to be amended.

Dated: August 11, 2015.

Simon Y. Liu,

Associate Administrator, ARS.

[FR Doc. 2015–20844 Filed 9–1–15; 8:45 am]

BILLING CODE 3410–03–P

DEPARTMENT OF AGRICULTURE

Agricultural Marketing Service

7 CFR Part 989

[Doc. No. AMS–FV–15–0032; FV15–989–2 PR]

Raisins Produced From Grapes Grown in California; Increased Assessment Rate

AGENCY: Agricultural Marketing Service, USDA.

ACTION: Proposed rule.

SUMMARY: This proposed rule would implement a recommendation from the Raisin Administrative Committee (committee) to increase the assessment rate established for the 2015–16 and subsequent crop years from $14.00 to $17.00 per ton of California raisins handled under the marketing order (order). The committee locally administers the order and is comprised of producers and handlers of raisins operating within the area of production. Assessments upon raisin handlers are used by the committee to fund reasonable and necessary expenses of the program. The crop year begins August 1 and ends July 31. The assessment rate would remain in effect indefinitely unless modified, suspended, or terminated.

DATES: Comments must be received by October 2, 2015.

ADDRESSES: Interested persons are invited to submit written comments concerning this proposed rule. Comments must be sent to the Docket Clerk, Marketing Order and Agreement Division, Fruit and Vegetable Program, AMS, USDA, 1400 Independence Avenue SW., STOP 0237, Washington, DC 20250–0237; Fax: (202) 720–8938, or Internet: *http://www.regulations.gov.* Comments should reference the docket number and the date and page number of this issue of the **Federal Register** and will be available for public inspection in the Office of the Docket Clerk during regular business hours, or can be viewed at: *http://www.regulations.gov.* All comments submitted in response to this proposed rule will be included in the record and will be made available to the public. Please be advised that the identity of the individuals or entities submitting the comments will be made public on the Internet at the address provided above.

FOR FURTHER INFORMATION CONTACT: Maria Stobbe, Marketing Specialist, or Martin Engeler, Regional Director, California Marketing Field Office, Marketing Order and Agreement Division, Fruit and Vegetable Program, AMS, USDA; Telephone: (559) 487–5901, Fax: (559) 487–5906; or Email: *Maria.Stobbe@ams.usda.gov* or *Martin.Engeler@ams.usda.gov.*

Small businesses may request information on complying with this regulation by contacting Jeffrey Smutny, Marketing Order and Agreement Division, Fruit and Vegetable Program, AMS, USDA, 1400 Independence Avenue SW., STOP 0237, Washington, DC 20250–0237; Telephone: (202) 720–2491, Fax: (202) 720–8938, or Email: *Jeffrey.Smutny@ams.usda.gov.*

SUPPLEMENTARY INFORMATION: This proposed rule is issued under Marketing Agreement and Order No. 989, both as amended (7 CFR part 989), regulating the handling of raisins produced from grapes grown in California, hereinafter referred to as the ''order.'' The order is effective under the Agricultural Marketing Agreement Act of 1937, as amended (7 U.S.C. 601–674), hereinafter referred to as the ''Act.''

The Department of Agriculture (USDA) is issuing this proposed rule in conformance with Executive Orders 12866, 13563, and 13175.

This proposed rule has been reviewed under Executive Order 12988, Civil Justice Reform. Under the marketing order now in effect, California raisin handlers are subject to assessments. Funds to administer the order are derived from assessments. It is intended that the assessment rate as proposed herein would be applicable to all assessable raisins beginning on August 1, 2015, and continue until amended, suspended, or terminated.

The Act provides that administrative proceedings must be exhausted before parties may file suit in court. Under section 608c(15)(A) of the Act, any handler subject to an order may file with USDA a petition stating that the order, any provision of the order, or any obligation imposed in connection with the order is not in accordance with law and request a modification of the order or to be exempted therefrom. Such handler is afforded the opportunity for a hearing on the petition. After the hearing, USDA would rule on the petition. The Act provides that the district court of the United States in any district in which the handler is an inhabitant, or has his or her principal place of business, has jurisdiction to review USDA's ruling on the petition, provided an action is filed not later than 20 days after the date of the entry of the ruling.

This proposed rule would increase the assessment rate established by the committee for the 2015–16 and

subsequent crop years from $14.00 to $17.00 per ton of California raisins acquired by handlers.

Sections 989.79 and 989.80, respectively, of the order provide authority for the committee, with the approval of USDA, to formulate an annual budget of expenses, and to collect assessments from handlers to administer the program. The members of the committee are producers and handlers of California raisins. They are familiar with the committee's needs and with costs for goods and services in their local area, and are, thus, in a position to formulate an appropriate budget and assessment rate. The assessment rate is formulated and discussed in a public meeting. Thus, all directly affected persons have an opportunity to participate and provide input.

For the 2010–11 and subsequent crop years, the committee recommended, and USDA approved, an assessment rate that would continue in effect from crop year to crop year unless modified, suspended, or terminated by USDA upon recommendation and information submitted by the committee or other information available to USDA.

The committee met on June 11, 2015, and recommended an assessment rate increase from $14.00 per ton to $17.00 per ton by a unanimous vote. At this meeting, the committee also recommended a budget for the 2015–16 crop year, with recommended expenses and contingency reserve totaling $5,832,496. The vote on this recommendation was also unanimous. The proposed assessment rate of $17.00 per ton is expected to generate assessment income of $5,832,496, which would be sufficient to fund the recommended 2015–16 expenses.

As previously stated, the committee's recommended budget for the 2015–16 crop year is $5,832,496, and the recommended assessment rate is $17.00 per ton, which is $3.00 per ton higher than the rate currently in effect.

The major expenditures recommended by the committee for the 2015–16 crop year include: Salaries and employee-related costs of $1,402,906; administration costs of $610,000; compliance activities of $30,000; research and studies of $129,000; operation and maintenance of the generic marketing programs of $3,520,178; and a contingency of $355,503. Subtracted from these expenses is $215,091, which represents reimbursable costs for the shared management of the State marketing program.

In comparison, last year's approved budgeted expenditures included: Salaries and employee-related costs of $1,337,100; administration costs of $493,500; compliance activities of $30,000; research and studies of $85,000; operation and maintenance of the generic marketing programs of $3,296,800; and a contingency of $100,000. Reimbursable costs for the shared management of the State marketing program of $166,860 were subtracted, resulting in a total approved budget for the 2014–15 crop year of $5,175,540.

The committee believes that more funds should be spent in promoting raisins internationally, including China. For that reason, budgeted expenses in those endeavors have been increased: Research and studies increased from $85,000 for the 2014–15 crop year to $129,000 for the 2015–16 crop year; and operation and maintenance of generic marketing programs increased from $3,296,800 for the 2014–15 crop year to $3,520,178 for the 2015–16 crop year. In addition, the committee included a contingency fund for unexpected expenses and opportunities that may occur during the year.

The quantity of assessable raisins for 2015–16 crop year was estimated to be 343,088 tons. At the recommended assessment rate of $17.00 per ton, the anticipated assessment income would be $5,832,496. Sufficient income should be generated at the higher assessment rate for the committee to meet its anticipated expenses.

Pursuant to § 989.81(a) of the order, any unexpended assessment funds from the crop year must be credited or refunded to the handlers from whom collected.

The proposed assessment rate would continue in effect indefinitely unless modified, suspended, or terminated by USDA upon recommendation and information submitted by the committee or other available information.

Although this assessment rate would be in effect for an indefinite period, the committee would continue to meet prior to or during each crop year to recommend a budget of expenses and consider recommendations for modification of the assessment rate. The dates and times of committee meetings are available from the committee or USDA. Committee meetings are open to the public and interested persons may express their views at these meetings. USDA would evaluate committee recommendations and other available information to determine whether modification of the assessment rate is needed. Further rulemaking would be undertaken as necessary. The committee's 2015–16 budget, and those for subsequent crop years, would be reviewed and, as appropriate, approved by USDA.

Initial Regulatory Flexibility Analysis

Pursuant to requirements set forth in the Regulatory Flexibility Act (RFA) (5 U.S.C. 601–612), the Agricultural Marketing Service (AMS) has considered the economic impact of this proposed rule on small entities. Accordingly, AMS has prepared this initial regulatory flexibility analysis.

The purpose of the RFA is to fit regulatory actions to the scale of businesses subject to such actions in order that small businesses will not be unduly or disproportionately burdened. Marketing orders issued pursuant to the Act, and the rules issued thereunder, are unique in that they are brought about through group action of essentially small entities acting on their own behalf.

There are approximately 3,000 producers of California raisins and approximately 28 handlers subject to regulation under the marketing order. The Small Business Administration defines small agricultural producers as those having annual receipts less than $750,000, and defines small agricultural service firms as those whose annual receipts are less than $7,000,000. (13 CFR 121.201.)

Based upon shipment data and other information provided by the committee, it may be concluded that a majority of producers and approximately 18 handlers of California raisins may be classified as small entities.

This proposed rule would increase the assessment rate established for the committee and collected from handlers for the 2015–16 and subsequent crop years from $14.00 to $17.00 per ton of assessable raisins acquired by handlers.

The committee reviewed and identified the expenses that would be reasonable and necessary to continue program operations during the 2015–16 crop year. The resulting recommended budget totals $5,832,496 for the 2015–16 crop year. This represents an overall increase from the 2014–15 budget, which totaled $5,175,540. The 2015–16 budget includes additional proposed expenditures to fund increased promotional programs in export markets, and a contingency fund of $355,503, which provides a safety net to cover unexpected expenses and opportunities that present themselves during the 2015–16 crop year.

The quantity of assessable raisins for 2015–16 crop year was estimated to be 343,088 tons. At the recommended assessment rate of $17.00 per ton, the anticipated assessment income would be $5,832,496. Sufficient income should

be generated at the higher assessment rate for the committee to meet its anticipated expenses.

The major expenditures recommended by the committee for the 2015–16 crop year include: Salaries and employee-related costs of $1,402,906; administration costs of $610,000; compliance activities of $30,000; research of $129,000; operation and maintenance of generic marketing programs of $3,520,178; and a contingency of $355,503.

In comparison, last year's approved budgeted expenditures included: Salaries and employee-related costs of $1,337,100; administration costs of $493,500; compliance activities of $30,000; research of $85,000; operation and maintenance of generic marketing programs of $3,296,800; and a contingency of $100,000. The total budget approved for the 2014–15 crop year was $5,175,540.

The committee believes that more funds should be spent in promoting raisins internationally, including China. For that reason, expenses for research and promotion activities have been increased: Operation and maintenance of generic marketing programs increased from $3,296,800 for the 2014–15 crop year to $3,520,178 for the 2015–16 crop year, and research has increased from $85,000 for the 2014–15 crop year to $129,000 for the 2015–16 crop year. In order to fund these additional proposed expenditures, the committee recommended an increased assessment rate.

Pursuant to § 989.81(a) of the order, any unexpended assessment funds from the crop year must be credited or refunded to the handlers from whom collected.

Prior to arriving at this budget and assessment rate, the committee considered information from various sources, such as the committee's Audit and Marketing Subcommittees. Alternative spending levels were discussed by the Marketing and Audit Subcommittees, which met on June 8, 2015 and June 11, 2015, to review the committee's financial operations.

The committee ultimately decided that the recommended budget and assessment rate were reasonable and necessary to properly administer the order.

A review of statistical data on the California raisin industry indicates that assessment revenue has consistently been less than one percent of grower revenue in recent years. With a $17.00 assessment rate, assessment revenue would be expected to remain at less than one percent of grower revenue.

Regarding the impact of this action on affected entities, this action would increase the assessment obligation imposed on handlers. While increased assessments impose additional costs on handlers regulated under the order, the rates are uniform on all handlers, and proportional to the size of their businesses. It is expected that these costs would be offset by the benefits derived from the operation of the order.

In addition, the meetings of the Audit and Marketing Subcommittees, and the full committee were widely publicized throughout the California raisin industry, and all interested persons were invited to attend the meetings and encouraged to participate in committee deliberations on all issues. Like all subcommittee and committee meetings, the June 8, 2015 and June 11, 2015, meetings were public meetings, and all entities, both large and small, were able to express views on this issue. Finally, interested persons are invited to submit comments on this proposed rule, including the regulatory and informational impacts of this action on small businesses.

In accordance with the Paperwork Reduction Act of 1995 (44 U.S.C. Chapter 35), the order's information collection requirements have been previously approved by the Office of Management and Budget (OMB) and assigned OMB No. 0581–0178, ''Vegetable and Specialty Crops.'' No changes in those requirements as a result of this action are necessary. Should any changes become necessary, they would be submitted to OMB for approval.

This proposed rule would impose no additional reporting or recordkeeping requirements on either small or large California raisin handlers. As with all Federal marketing order programs, reports and forms are periodically reviewed to reduce information requirements and duplication by industry and public sector agencies.

AMS is committed to complying with the E-Government Act, to promote the use of the internet and other information technologies to provide increased opportunities for citizen access to Government information and services, and for other purposes.

USDA has not identified any relevant Federal rules that duplicate, overlap, or conflict with this action.

A small business guide on complying with fruit, vegetable, and specialty crop marketing agreements and orders may be viewed at: *http://www.ams.usda.gov/MarketingOrdersSmallBusinessGuide.* Any questions about the compliance guide should be sent to Jeffrey Smutny at the previously mentioned address in the **FOR FURTHER INFORMATION CONTACT** section.

A 30-day comment period is provided to allow interested persons to respond to this proposed rule. Thirty days is deemed appropriate because: (1) The 2015–16 crop year begins on August 1, 2015, and the order requires the rate of assessment for each crop year to apply to all assessable raisins handled during the crop year; (2) the committee needs to have sufficient funds to pay its expenses, which are incurred on a continuous basis; and (3) handlers are aware of this action, which was unanimously recommended by the committee at a public meeting.

List of subjects in 7 CFR Part 989

Grapes, Marketing agreements, Raisins, Reporting and recordkeeping requirements.

For the reasons set forth in the preamble, 7 CFR part 989 is proposed to be amended as follows:

PART 989—RAISINS PRODUCED FROM GRAPES GROWN IN CALIFORNIA

■ 1. The authority citation for 7 CFR part 989 continues to read as follows:

Authority: 7 U.S.C. 601–674.

■ 2. Section 989.347 is revised to read as follows:

§ 989.347 Assessment rate.

On and after August 1, 2015, an assessment rate of $17.00 per ton is established for assessable raisins produced from grapes grown in California.

Dated: August 28, 2015.

Rex A. Barnes,

Associate Administrator, Agricultural Marketing Service.

[FR Doc. 2015–21850 Filed 9–1–15; 8:45 am]

BILLING CODE P

DEPARTMENT OF TRANSPORTATION

Federal Aviation Administration

14 CFR Part 39

[Docket No. FAA–2015–3657; Directorate Identifier 2012–SW–069–AD]

RIN 2120–AA64

Airworthiness Directives; Airbus Helicopters (Previously Eurocopter France (Eurocopter) Helicopters)

AGENCY: Federal Aviation Administration (FAA), DOT.

ACTION: Notice of proposed rulemaking (NPRM).

SUMMARY: We propose to supersede airworthiness directive (AD) 2007–25–08 for Eurocopter Model SA–365 N1, AS–365N2, AS 365 N3, SA–366G1, EC 155B, and EC155B1 helicopters. AD 2007–25–08 currently requires checking the tail rotor gearbox (TGB) oil level, inspecting the magnetic plug for chips and either replacing the TGB or further inspecting for axial play in the tail rotor hub pitch change control spider (spider), and if axial play is found in the spider, replacing the pitch control rod assembly double bearing (bearing). Since we issued the AD 2007–25–08, we have received reports of new occurrences of loss of yaw control due to failure of the control rod bearing. This proposed AD would retain some of the requirements of AD 2007–25–08, revise the inspections for play in the double bearing to improve the detection of play, require replacing the TGB control shaft guide bushes, clarify the criteria concerning particle detection, and change the inspection for play in the double bearing after the guide bushes have been replaced. The proposed actions are intended to prevent damage to the bearing resulting in end play, loss of tail rotor pitch control, and subsequent loss of control of the helicopter.

DATES: We must receive comments on this proposed AD by November 2, 2015.

ADDRESSES: You may send comments by any of the following methods:

- *Federal eRulemaking Docket:* Go to *http://www.regulations.gov.* Follow the online instructions for sending your comments electronically.
- *Fax:* 202–493–2251.
- *Mail:* Send comments to the U.S. Department of Transportation, Docket Operations, M–30, West Building Ground Floor, Room W12–140, 1200 New Jersey Avenue SE., Washington, DC 20590–0001.
- *Hand Delivery:* Deliver to the ''Mail'' address between 9 a.m. and 5 p.m., Monday through Friday, except Federal holidays.

Examining the AD Docket

You may examine the AD docket on the Internet at *http://www.regulations.gov* or in person at the Docket Operations Office between 9 a.m. and 5 p.m., Monday through Friday, except Federal holidays. The AD docket contains this proposed AD, the European Aviation Safety Agency (EASA) AD, the economic evaluation, any comments received and other information. The street address for the Docket Operations Office (telephone 800–647–5527) is in the **ADDRESSES** section. Comments will be available in the AD docket shortly after receipt.

For service information identified in this proposed AD, contact Airbus Helicopters, Inc., 2701 N. Forum Drive, Grand Prairie, TX 75052; telephone (972) 641–0000 or (800) 232–0323; fax (972) 641–3775; or at *http://www.airbushelicopters.com/techpub.* You may review service information at the FAA, Office of the Regional Counsel, Southwest Region, 10101 Hillwood Pkwy, Room 6N–321, Fort Worth, Texas 76177.

FOR FURTHER INFORMATION CONTACT: Matt Wilbanks, Aviation Safety Engineer, Rotorcraft Certification Office, Rotorcraft Directorate, FAA, 10101 Hillwood Pkwy, Fort Worth, Texas 76177; telephone (817) 222–5110; email *matt.wilbanks@faa.gov.*

SUPPLEMENTARY INFORMATION:

Comments Invited

We invite you to participate in this rulemaking by submitting written comments, data, or views. We also invite comments relating to the economic, environmental, energy, or federalism impacts that might result from adopting the proposals in this document. The most helpful comments reference a specific portion of the proposal, explain the reason for any recommended change, and include supporting data. To ensure the docket does not contain duplicate comments, commenters should send only one copy of written comments, or if comments are filed electronically, commenters should submit only one time.

We will file in the docket all comments that we receive, as well as a report summarizing each substantive public contact with FAA personnel concerning this proposed rulemaking. Before acting on this proposal, we will consider all comments we receive on or before the closing date for comments. We will consider comments filed after the comment period has closed if it is possible to do so without incurring expense or delay. We may change this proposal in light of the comments we receive.

Discussion

On November 27, 2007, we issued AD 2007–25–08, Amendment 39–15290 (72 FR 69604, December 10, 2007) for Eurocopter (now Airbus Helicopters) Model SA–365 N1, AS–365 N2, AS 365 N3, SA–366G1, EC 155B, and EC155B1 helicopters. AD 2007–25–08 requires repetitively checking the TGB oil level to ensure it is at the maximum level. AD 2007–25–08 also requires repetitively inspecting the magnetic plug for chips, and depending on the quantity of chips found, either replacing the TGB or further inspecting for axial play in the spider. If axial play is found in the spider, AD 2007–25–08 requires replacing the bearing. AD 2007–25–08 was prompted by EASA Emergency AD No. 2006–0258R1–E, dated August 29, 2006, as well as the finding that metal chips were not detected on the magnetic plug due to insufficient oil flow because the oil in the TGB was being maintained at the minimum level. The actions of AD 2007–25–08 are intended to detect metal chips on the magnetic plug and to prevent damage to the bearing resulting in end play, loss of tail rotor pitch control, and subsequent loss of control of the helicopter.

Actions Since AD 2007–25–08 Was Issued

Since we issued AD 2007–25–08 (72 FR 69604, December 10, 2007), we have received reports of new occurrences of loss of yaw control due to failure of the control rod bearing.

EASA, which is the Technical Agent for the Member States of the European Union, has since superseded EASA Emergency AD No. 2006–0258R1–E with several ADs, the most recent being EASA AD No. 2012–0170R2, dated June 20, 2014, to correct an unsafe condition for these Airbus Model helicopters. After receiving reports of several new occurrences of damage to the bearings and subsequent investigations of the incidents, EASA advises of implementing additional, revised inspection and corrective actions; reducing the interval between inspections; a modification replacing both guide bushes and improving the tolerance between the control shaft and the TGB wheel to limit the friction loads on the control bearing; and requiring the play measurement of the TGB to control rod, shaft assembly double bearing to be measured according to the type of fenestron installed. EASA AD 2012–0170R2 also excludes helicopters modified in accordance with modification (MOD) 07 65B63.

FAA's Determination

These helicopters have been approved by the aviation authority of France and are approved for operation in the United States. Pursuant to our bilateral agreement with France, EASA, its technical representative, has notified us of the unsafe condition described in its AD. We are proposing this AD because we evaluated all known relevant information and determined that an unsafe condition is likely to exist or develop on other products of the same type design.

Related Service Information Under 1 CFR Part 51

We reviewed ASB No. AS365–05.00.61, Revision 4, dated April 8, 2014, for FAA-certificated Model SA 365 N1, AS 365 N2, and AS 365 N3 helicopters and for non-FAA-certificated Model AS355F, F1, and F2 helicopters; ASB No. SA366–05.41, Revision 4, dated April 8, 2014, for FAA-certificated Model SA–366G1 and non-FAA-certificated Model SA–366GA helicopters; and ASB No. EC155–05A022, Revision 4, dated April 8, 2014, for FAA-certificated Model EC 155B and EC155B1 helicopters. All three ASBs describe procedures for monitoring the behavior of the bearing by checking its axial play by dimensional measurement and by maintaining the operating oil at the maximum level. EASA classified this service information as mandatory and issued EASA AD No. 2012–0170R2 to ensure the continued airworthiness of these helicopters. This service information is reasonably available because the interested parties have access to it through their normal course of business or by the means identified in the **ADDRESSES** section of this NPRM.

Proposed AD Requirements

This proposed AD would require:

- Checking the TGB oil level at specified intervals. An owner/operator (pilot) may perform this visual check and must enter compliance into the helicopter maintenance records in accordance with 14 CFR §§ 43.9(a)(1) through (4) and 91.417(a)(2)(v). A pilot may perform this check because it involves only a visual check for the oil level in the TGB and can be performed equally well by a pilot or a mechanic. This check is an exception to our standard maintenance regulations.
- Inspecting the magnetic plug of the TGB for chips at specified intervals.
- Within 300 hours time-in-service (TIS), replacing each affected part-numbered TGB guide bush with an airworthy guide bush, inspecting the bearing of the TGB control shaft and rod assembly for M50 type particles, and performing measurements of play in the TGB control shaft and rod assembly.
- Within 110 hours TIS after replacing the guide bush, and thereafter at intervals not to exceed 55 hours TIS, performing certain measurements for play in the TGB control shaft and rod assembly.

This proposed AD would not apply to helicopters with TGB part number 365A33–6005–09 installed. Airbus Helicopters refers to the installation of this part-numbered TGB as MOD 07 65B63.

Differences Between the Proposed AD and the EASA AD

The calendar times in the EASA AD have already passed and are not included in this proposed AD.

Costs of Compliance

We estimate that this proposed AD would affect 133 helicopters of U.S. Registry. We estimate that operators may incur the following costs in order to comply with this AD. The estimated labor cost is $85 per work-hour. We estimate .5 work-hour to check the TGB oil level for a cost of $43 per helicopter and $5,719 for the fleet each inspection cycle. We estimate .5 work-hour to inspect the magnetic plug on the TGB for chips for a cost of $43 per helicopter and $5,719 for the fleet each inspection cycle. We estimate 3 work-hours to measure the play in the TGB control shaft and rod assembly for a cost of $255 per helicopter and $33,915 for the fleet each inspection cycle. Replacing the TGB control shaft guide bushes would take 4 work-hours and required parts would cost $565, for an estimated total of $905 per helicopter and $120,365 for the U.S. operator fleet. Inspecting the TGB control shaft and rod assembly for steel particles would take 6 work-hours for a cost per helicopter of $510 and a fleet cost of $67,830. If necessary, it would cost about $30,000 per helicopter to replace the TGB and $24,000 for overhaul of the TGB to replace the bearing.

Authority for This Rulemaking

Title 49 of the United States Code specifies the FAA's authority to issue rules on aviation safety. Subtitle I, section 106, describes the authority of the FAA Administrator. ''Subtitle VII: Aviation Programs,'' describes in more detail the scope of the Agency's authority.

We are issuing this rulemaking under the authority described in ''Subtitle VII, Part A, Subpart III, Section 44701: General requirements.'' Under that section, Congress charges the FAA with promoting safe flight of civil aircraft in air commerce by prescribing regulations for practices, methods, and procedures the Administrator finds necessary for safety in air commerce. This regulation is within the scope of that authority because it addresses an unsafe condition that is likely to exist or develop on products identified in this rulemaking action.

Regulatory Findings

We determined that this proposed AD would not have federalism implications under Executive Order 13132. This proposed AD would not have a substantial direct effect on the States, on the relationship between the national Government and the States, or on the distribution of power and responsibilities among the various levels of government.

For the reasons discussed, I certify this proposed regulation:

1. Is not a ''significant regulatory action'' under Executive Order 12866;
2. Is not a ''significant rule'' under the DOT Regulatory Policies and Procedures (44 FR 11034, February 26, 1979);
3. Will not affect intrastate aviation in Alaska to the extent that it justifies making a regulatory distinction; and
4. Will not have a significant economic impact, positive or negative, on a substantial number of small entities under the criteria of the Regulatory Flexibility Act.

We prepared an economic evaluation of the estimated costs to comply with this proposed AD and placed it in the AD docket.

List of Subjects in 14 CFR Part 39

Air transportation, Aircraft, Aviation safety, Incorporation by reference, Safety.

The Proposed Amendment

Accordingly, under the authority delegated to me by the Administrator, the FAA proposes to amend 14 CFR part 39 as follows:

PART 39—AIRWORTHINESS DIRECTIVES

■ 1. The authority citation for part 39 continues to read as follows:

Authority: 49 U.S.C. 106(g), 40113, 44701.

§ 39.13 [Amended]

■ 2. The FAA amends § 39.13 by removing Airworthiness Directive (AD) 2007–25–08, Amendment 39–15290 (72 FR 69604, December 10, 2007), and adding the following new AD:

Airbus Helicopters (Previously Eurocopter France Helicopters): Docket No. FAA–2015–3657; Directorate Identifier 2012–SW–069–AD.

(a) Applicability

This AD applies to Model SA–365N1, AS–365N2, AS 365 N3, SA–366G1, EC 155B, and EC155B1 helicopters, with a tail rotor gearbox (TGB) pitch control rod assembly double bearing (bearing) installed, certificated in any category, except helicopters with TGB part number (P/N) 365A33–6005–09 installed.

(b) Unsafe Condition

This AD defines the unsafe condition as damage to the bearing, which could result in end play, loss of tail rotor pitch control, and subsequent loss of control of the helicopter.

(c) Affected ADs

This AD supersedes AD 2007–25–08, Amendment 39–15290 (72 FR 69604, December 10, 2007).

(d) Comments Due Date

We must receive comments by November 2, 2015.

(e) Compliance

You are responsible for performing each action required by this AD within the specified compliance time unless it has already been accomplished prior to that time.

(f) Required Actions

(1) Check the TGB oil level at the following intervals:

(i) For Model SA–365N1, AS–365N2, AS 365 N3 helicopters, at intervals not to exceed 10 hours time-in-service (TIS).

(ii) For Model SA366G1 helicopters, at each daily flight check.

(iii) For Model EC 155B and EC155B1 helicopters, at intervals not to exceed 15 hours TIS or 7 days, whichever occurs first.

(iv) The actions required by paragraph (f)(1) of this AD may be performed by the owner/operator (pilot) holding at least a private pilot certificate and must be entered into the aircraft records showing compliance with this AD in accordance with 14 CFR §§ 43.9(a)(1) through (4) and 14 CFR 91.417(a)(2)(v). The record must be maintained as required by 14 CFR §§ 91.417, 121.380, or 135.439.

(2) If the oil level is not at maximum, before further flight, a qualified mechanic must fill it to the maximum level.

(3) Inspect the magnetic plug of the TGB for any chips as follows:

(i) At intervals not to exceed 25 hours TIS for helicopters with a magnetic plug without a chip electrical indication in the cockpit, or

(ii) At intervals not to exceed 100 hours TIS and after any illumination of the TGB ''CHIP'' warning light for helicopters with a chip electrical indication in the cockpit.

(4) If you find any chips during the inspection in paragraph (f)(3) of this AD, determine whether the quantity of chips is within the removal criteria.

(i) If the quantity of chips on the magnetic plug is at or above the removal criteria, before further flight, replace the TGB with an airworthy TGB.

(ii) If the quantity of chips on the magnetic plug is below the removal criteria, comply with paragraph (f)(6) of this AD before further flight.

(5) Within 300 hours TIS, without removing the TGB:

(i) Replace each TGB control shaft guide bush (guide bush), P/N 365A33–6189–20 and 365A33–6189–21, with guide bush, P/N 365A33–6223–20, and replace each guide bush, P/N 365A33–6188–20, with guide bush, P/N 365A33–6222–20.

Note 1 to paragraph (f)(5)(i) of this AD: Airbus Helicopters refers to the replacement of the guide bushes as Modification 0765B58.

(ii) Inspect the bearing of the TGB control shaft and rod assembly for M50 type particles (particles) as shown in Figures 1 through 3 of Airbus Helicopters Alert Service Bulletin (ASB) No. AS365–05.00.61, Revision 4, dated April 8, 2014, for Model SA 365 N1, AS 365 N2, and AS 365 N3 helicopters (AS365–05.00.61); ASB No. SA366–05.41, Revision 4, dated April 8, 2014, for Model SA 366G1 helicopters (SA366–05.41); or ASB No. EC155–05A022, Revision 4, dated April 8, 2014, for Model EC 155B and EC155B1 helicopters (EC155–05A022). Inspect the bearing by separating the control shaft (item q of Figure 3) from the control rod (item p of Figure 3), rinse the bearing with white spirit or equivalent, collect the product on a blotting paper, and inspect for particles inside the control shaft, around the bearing, and on blotting paper.

(A) If there are no particles, clean the control shaft and control rod with white spirit or equivalent and install the control shaft and control rod.

(B) If there are any particles, replace the bearing with an airworthy bearing.

(iii) Perform measurements of play in the TGB control shaft and rod assembly bearing as follows:

(A) For the TGB side:

(1) Remove the cover and inspect the positioning of the locking of the 3 screws, as shown in the two positioning for measurement photographs in the Accomplishment Instructions under paragraph 3.B.4.a.(1) of ASB AS365–05.00.61, SA336–05.41, or EC155–05A022. Correctly lock the screws if the positioning is inconvenient for measurement. Set the pedal unit to the neutral position and rig the tail servo-control using a 6 mm diameter pin. Remove any primer and paint from the support casing face of the servo-control using 600 grit sand paper. Apply DOW 19 or equivalent protection and a coat of primer P05 or equivalent. Do not reapply primer and paint to the support casing face of the servo-control.

(2) Perform a measurement ''M1'' using a caliper gage, between the end of the control rod (item p in the three photographs in the Accomplishment Instructions under paragraph 3.B.4.a.(1) of ASB AS365–05.00.61, SA336–05.41, or EC155–05A022) and the seating face of the servo-control on the casing. Mark the position of the caliper gage on the support casing face of the servo-control as ''R1'' using a permanent felt tip pen. Position the caliper gage on R1 (shown in the first of the three photographs in the Accomplishment Instructions under paragraph 3.B.4.a.(1) of ASB AS365–05.00.61, SA336–05.41, or EC155–05A022) and on the screw (item ac in the first of the three photographs in the Accomplishment Instructions under paragraph 3.B.4.a.(1) of ASB AS365–05.00.61, SA336–05.41, or EC155–05A022) of the universal joint of the servo-control. Set the mobile part of the caliper gage against the end of the control rod. Shift the caliper gage against the control lever (item ab in the last photograph in the Accomplishment Instructions under paragraph 3.B.4.a.(1) of ASB AS365–05.00.61, SA336–05.41, or EC155–05A022) while remaining in contact with the end of the control rod.

(3) Record measurement M1 indicated on the caliper gage on the component history card or equivalent record.

(B) For the TRH side:

(1) Perform a measurement ''M2'' using a caliper gage between the flat face of the center plate (item c in the photograph in the Accomplishment Instructions under paragraph 3.B.4.a.(2) of ASB AS365–05.00.61, SA336–05.41, or EC155–05A022) and the face of the inner web (item ad in the photograph in the Accomplishment Instructions under paragraph 3.B.4.a.(2) of ASB AS365–05.00.61, SA336–05.41, or EC155–05A022) of the rotor hub on which the inner bearings of the TRH blades are installed. Position the caliper gage flat across the opening (item ae in the photograph in the Accomplishment Instructions under paragraph 3.B.4.a.(2) of ASB AS365–05.00.61, SA336–05.41, or EC155–05A022) of the pitch change spider. Mark the position of the caliper gage on the flat surface of the center plate as ''R2'' and on the opening as ''R3'' using a permanent felt tip pen.

(2) Record measurement M2 indicated on the caliper gage.

(3) Calculate a measurement ''M0'' by adding measurements M1 (required in paragraph (f)(5)(iii)(A) of this AD) and M2.

(4) Perform measurements M1 and M2 again by repeating the requirements in paragraphs (f)(5)(iii)(A) and (f)(5)(iii)(B) of this AD and calculate a second measurement M0.

(5) Calculate the difference between the two M0 measurements. If the difference is not less than 0.25 mm (0.01 inch), calculate the two M0 measurements again.

(6) Calculate the mean value of the two M0 measurements and record it on the component history card or equivalent record. This M0 measurement will be the reference measurement enabling you to evaluate any increase in the play in the bearing of the control shaft and rod assembly during later inspections.

(6) Within 110 hours TIS after replacing the guide bush, and thereafter at intervals not to exceed 55 hours TIS, perform measurements for play in the TGB control shaft and rod assembly as follows.

(i) On the TGB side:

(A) Remove the TGB fairing, set the pedal unit to the neutral position and rig the tail servo-control using a 6 mm diameter pin.

(B) Perform measurement ''M1'' using a caliper gage between the end of the control rod (item p in the three photographs in the Accomplishment Instructions under paragraph 3.B.4.b (1) of ASB AS365–05.00.61, SA336–05.41, or EC155–05A022) and the seating face of the servo-control on the casing. Position the caliper gage on mark R1 and the bearing against the screw (item ac as shown in the first of the three photographs in the Accomplishment Instructions under paragraph 3.B.4.b.(1) of ASB AS365–05.00.61, SA336–05.41, or EC155–05A022) of the universal joint of the servo-control. Set the mobile part of the caliper gage against the end of the control rod. Shift the caliper gage against the control lever (item ab as shown in the last of the three photographs in the Accomplishment Instructions under paragraph 3.B.4.b.(1) of ASB AS365–05.00.61, SA336–05.41, or EC155–05A022) while remaining in contact with the end of the control rod.

(C) Record measurement M1 indicated on the caliper gage on the component history card or equivalent record.

(ii) On the tail rotor hub (TRH) side:

(A) Remove the fairing and perform a measurement ''M2'' using a caliper gage between the flat face of the center plate (item c in the photograph in the Accomplishment Instructions under paragraph 3.B.4.b.(2) of ASB AS365–05.00.61, SA336–05.41, or EC155–05A022) and the face of the inner web (item ad in the photograph in the Accomplishment Instructions under paragraph 3.B.4.b.(2) of ASB AS365–05.00.61, SA336–05.41, or EC155–05A022) of the rotor hub on which the inner bearings of the TRH blades are installed. Position the caliper gage flat across the opening of the pitch change spider on R2 and R3 as shown in the right photograph in the Accomplishment Instructions under paragraph 3.B.4.b.(2) of ASB AS365–05.00.61, SA336–05.41, or EC155–05A022.

(B) Record measurement M2 indicated on the caliper gage on the component history card or equivalent record.

(C) Calculate a measurement ''M3'' by adding measurements M1 and M2.

(D) Calculate the difference between measurement ''M0'' indicated on the TGB component history card or equivalent record and M3.

(1) If the difference between measurement M0 and M3 is less than 0.5 mm (0.02 inch), perform an additional inspection for play in the bearing of the TGB control shaft and rod assembly by following the Accomplishment Instructions, paragraph 3.B.6., of ASB AS365–05.00.61, SA366–05.41, or EC155–05A022. If there is no axial play at the TRH pitch change spider, record value M3 on the component history card or equivalent record. If there is axial play at the TRH pitch change spider, replace the bearing with an airworthy bearing and perform a new reference measurement by following the requirements of paragraph (f)(6) of this AD.

(2) If the difference between the measurements is equal to or greater than 0.5 mm (0.02 inch), replace the bearing with an airworthy bearing and perform a new reference measurement by following the requirements of paragraph (f)(6) of this AD.

(g) Alternative Methods of Compliance (AMOCs)

(1) The Manager, Safety Management Group, FAA, may approve AMOCs for this AD. Send your proposal to: Matt Wilbanks, Aviation Safety Engineer, Rotorcraft Certification Office, Rotorcraft Directorate, FAA, 10101 Hillwood Pkwy, Fort Worth, Texas 76177; telephone (817) 222–5110; email *9-ASW-FTW-AMOC-Requests@faa.gov*.

(2) For operations conducted under a 14 CFR part 119 operating certificate or under 14 CFR part 91, subpart K, we suggest that you notify your principal inspector, or lacking a principal inspector, the manager of the local flight standards district office or certificate holding district office before operating any aircraft complying with this AD through an AMOC.

(h) Additional Information

The subject of this AD is addressed in European Aviation Safety Agency (EASA) AD No. 2012–0170R2, dated June 20, 2014. You may view the EASA AD on the internet at *http://www.regulations.gov* in Docket No. FAA–2015–3657.

(i) Subject

Joint Aircraft Service Component (JASC) Code: 6520 Tail Rotor Gearbox.

Issued in Fort Worth, Texas, on August 21, 2015.

Lance T. Gant,

Acting Directorate Manager, Rotorcraft Directorate, Aircraft Certification Service.

[FR Doc. 2015–21689 Filed 9–1–15; 8:45 am]

BILLING CODE 4910–13–P

DEPARTMENT OF TRANSPORTATION

Federal Aviation Administration

14 CFR Part 39

[Docket No. FAA–2015–3659; Directorate Identifier 2014–SW–050–AD]

RIN 2120–AA64

Airworthiness Directives; MD Helicopters Inc., Helicopters

AGENCY: Federal Aviation Administration (FAA), DOT.

ACTION: Notice of proposed rulemaking (NPRM).

SUMMARY: We propose to adopt a new airworthiness directive (AD) for MD Helicopters Inc. (MDHI) Model 369A, 369D, 369E, 369FF, 369HE, 369HM, 369HS, 500N, and 600N helicopters with a certain part-numbered main rotor blade attach pin (pin) installed. This proposed AD would require ensuring the life limit of the pin as listed in the Airworthiness Limitations section of aircraft maintenance records and Instructions for Continued Airworthiness (ICA). If the hours time-in-service (TIS) of a pin is unknown, or if a pin has exceeded its life limit, this proposed AD would require removing the affected pin from service. This proposed AD is prompted by a report from an operator who purchased pins that did not have life limit documentation. The proposed actions are intended to document the life limit to prevent a pin remaining in service beyond its fatigue life, which could result in failure of a pin, failure of a main rotor blade, and subsequent loss of control of the helicopter.

DATES: We must receive comments on this proposed AD by November 2, 2015.

ADDRESSES: You may send comments by any of the following methods:

- *Federal eRulemaking Docket:* Go to *http://www.regulations.gov*. Follow the online instructions for sending your comments electronically.
- *Fax:* 202–493–2251.
- *Mail:* Send comments to the U.S. Department of Transportation, Docket Operations, M–30, West Building Ground Floor, Room W12–140, 1200 New Jersey Avenue SE., Washington, DC 20590–0001.
- *Hand Delivery:* Deliver to the ''Mail'' address between 9 a.m. and 5 p.m., Monday through Friday, except Federal holidays.

Examining the AD Docket

You may examine the AD docket on the Internet at *http://www.regulations.gov* or in person at the Docket Operations Office between 9 a.m. and 5 p.m., Monday through Friday, except Federal holidays. The AD docket contains this proposed AD, the economic evaluation, any comments received, and other information. The street address for the Docket Operations Office (telephone 800–647–5527) is in the **ADDRESSES** section. Comments will be available in the AD docket shortly after receipt.

For service information identified in this proposed AD, contact Aerometals, 3920 Sandstone Dr., El Dorado Hills, CA 95762, telephone (916) 939–6888, fax (916) 939–6555, *www.aerometals.aero*. You may review the referenced service information at the FAA, Office of the Regional Counsel, Southwest Region, 10101 Hillwood Pkwy, Room 6N–321, Fort Worth, TX 76177.

FOR FURTHER INFORMATION CONTACT: Galib Abumeri, Aviation Safety Engineer, Los Angeles Aircraft Certification Office, Transport Airplane Directorate, FAA, 3960 Paramount Blvd., Lakewood, California 90712; telephone (562) 627–5324; email *Galib.Abumeri@faa.gov*.

SUPPLEMENTARY INFORMATION:

Comments Invited

We invite you to participate in this rulemaking by submitting written comments, data, or views. We also invite comments relating to the economic, environmental, energy, or federalism impacts that might result from adopting the proposals in this document. The most helpful comments reference a specific portion of the proposal, explain the reason for any recommended change, and include supporting data. To ensure the docket does not contain duplicate comments, commenters should send only one copy of written comments, or if comments are filed electronically, commenters should submit only one time.

We will file in the docket all comments that we receive, as well as a report summarizing each substantive

public contact with FAA personnel concerning this proposed rulemaking. Before acting on this proposal, we will consider all comments we receive on or before the closing date for comments. We will consider comments filed after the comment period has closed if it is possible to do so without incurring expense or delay. We may change this proposal in light of the comments we receive.

Discussion

We propose to adopt a new AD for MDHI Model 369A, 369D, 369E, 369FF, 369HE, 369HM, 369HS, 500N, and 600N helicopters with a pin part-number (P/N) 369X1004–5 installed. This proposed AD would require determining the number of hours TIS of each pin and whether the aircraft maintenance records contain a pin life limit. If the hours TIS are unknown, this proposed AD would require removing the pin from service. If the aircraft maintenance records do not contain a pin life limit, this proposed AD would require revising the records and establishing a life limit of 5,760 hours if the pin is installed on a Model 369A, 369HE, 369HM, or 369HS helicopter, or 7,600 hours if the pin is installed on a Model 369D, 369E, 369FF, 500N, or 600N helicopter. This proposed AD would also require revising the records to add a statement that if a pin is interchanged between different model helicopters, then its life limit must be restricted to the lower life limit even if it was originally installed on a helicopter model with a higher life limit. Lastly, this proposed AD would prohibit installing a pin on any helicopter before these proposed requirements have been accomplished.

Aerometals produces pin P/N 369X1004–5 under a parts manufacturer approval as a replacement pin for MDHI P/N 369A1004–5. This proposed AD is prompted by a report from an operator who purchased Aerometals' pins P/N 369X1004–5 without life limit documentation. The FAA inadvertently approved the pins without a life limit in the Airworthiness Limitations section and without a restriction for parts that are interchanged between models with different life limits. A total of 5,133 affected pins were sold by Aerometals without any indication that the parts were life-limited. The proposed actions are intended to correct the failure of these parts to have a documented life limit to prevent a pin remaining in service beyond its fatigue life, which could result in failure of a pin, failure of a main rotor blade, and subsequent loss of control of the helicopter.

FAA's Determination

We are proposing this AD because we evaluated all known relevant information and determined that an unsafe condition exists and is likely to exist or develop on other products of these same type designs.

Related Service Information

Aerometals has issued Aero-ICA–1001 Supplemental Instructions for Continued Airworthiness, Revision NC, dated May 22, 2014, and Service Bulletin Aero-SB–1103, dated July 2, 2014. The service bulletin specifies determining whether the helicopter has pins P/N 369X1004–5 installed and then reviewing the aircraft maintenance records to determine if the pins have a life limit identified. If the life limit is not the same as that listed in the ICA, the service bulletin specifies revising the life limit in the maintenance records. The service bulletin states that the pins were approved by the FAA as Parts Manufacturer Approval direct replacement parts with the same life limits as the parts they replace. However, they were sold without an FAA-approved supplemental ICA containing an Airworthiness Limitations Section specifically assigning these life limits to the pins.

Proposed AD Requirements

This proposed AD would require, within 100 hours TIS or during the next annual inspection, whichever comes first:

° Reviewing the maintenance records and determining the hours TIS of each pin and whether there is a pin life limit listed in the Airworthiness Limitations Section of the applicable maintenance manual or ICA. If the hours TIS on a pin are unknown, the proposed AD would require removing the pin from service.

° For Model 369A, 369HE, 369HM, and 369HS helicopters, if there is no pin life limit, establishing a new life limit of 5,760 hours TIS and removing any pin from service that has 5,760 or more hours TIS.

° For Model 369D, 369E, 369FF, 500N and 600N helicopters, if there is no pin life limit, establishing a new life limit of 7,600 hours TIS and removing any pin from service that has 7,600 or more hours TIS.

° For all model helicopters, establishing a requirement that if a pin is interchanged between model helicopters with different life limits, the life limit of the pin must be restricted to the lowest life limit.

This proposed AD would also prohibit installing a pin P/N 369X1004–5 on any helicopter until the requirements of the AD have been accomplished.

Costs of Compliance

We estimate that this proposed AD would affect 118 helicopters of U.S. Registry.

We estimate that operators may incur the following costs in order to comply with this AD. Labor costs are estimated at $85 per hour. We estimate l/2 work hour to inspect and record any update for a total of $42.50 per helicopter and $5,015 for the U.S. fleet. If required, we estimate 1 work hour per helicopter to replace 10 pins because each blade has 2 pins and each helicopter has 5 blades. Required parts are $445 for each pin. Based on these estimates, it would cost $4,535 per helicopter to replace 10 pins if the pins have exceeded their life limit.

Authority for This Rulemaking

Title 49 of the United States Code specifies the FAA's authority to issue rules on aviation safety. Subtitle I, section 106, describes the authority of the FAA Administrator. ''Subtitle VII: Aviation Programs,'' describes in more detail the scope of the Agency's authority.

We are issuing this rulemaking under the authority described in ''Subtitle VII, Part A, Subpart III, Section 44701: General requirements.'' Under that section, Congress charges the FAA with promoting safe flight of civil aircraft in air commerce by prescribing regulations for practices, methods, and procedures the Administrator finds necessary for safety in air commerce. This regulation is within the scope of that authority because it addresses an unsafe condition that is likely to exist or develop on products identified in this rulemaking action.

Regulatory Findings

We determined that this proposed AD would not have federalism implications under Executive Order 13132. This proposed AD would not have a substantial direct effect on the States, on the relationship between the national Government and the States, or on the distribution of power and responsibilities among the various levels of government.

For the reasons discussed, I certify this proposed regulation:

1. Is not a ''significant regulatory action'' under Executive Order 12866;

2. Is not a ''significant rule'' under the DOT Regulatory Policies and Procedures (44 FR 11034, February 26, 1979);

3. Will not affect intrastate aviation in Alaska to the extent that it justifies making a regulatory distinction; and

4. Will not have a significant economic impact, positive or negative, on a substantial number of small entities under the criteria of the Regulatory Flexibility Act.

We prepared an economic evaluation of the estimated costs to comply with this proposed AD and placed it in the AD docket.

List of Subjects in 14 CFR Part 39

Air transportation, Aircraft, Aviation safety, Incorporation by Reference, Safety.

The Proposed Amendment

Accordingly, under the authority delegated to me by the Administrator, the FAA proposes to amend 14 CFR part 39 as follows:

PART 39—AIRWORTHINESS DIRECTIVES

■ 1. The authority citation for part 39 continues to read as follows:

Authority: 49 U.S.C. 106(g), 40113, 44701.

§ 39.13 [Amended]

■ 2. The FAA amends § 39.13 by adding the following new airworthiness directive (AD):

MD Helicopters Inc.: Docket No. FAA–2015–3659; Directorate Identifier 2014–SW–050–AD.

(a) Applicability

This AD applies to Model 369A, 369D, 369E, 369FF, 369HE, 369HM, 369HS, 500N, and 600N helicopters with an Aerometals main rotor blade attach pin (pin) part number (P/N) 369X1004–5 installed, certificated in any category.

(b) Unsafe Condition

This AD defines the unsafe condition as a pin remaining in service beyond its fatigue life. This condition could result in failure of a pin, loss of a main rotor blade, and subsequent loss of control of the helicopter.

(c) Comments Due Date

We must receive comments by November 2, 2015.

(d) Compliance

You are responsible for performing each action required by this AD within the specified compliance time unless it has already been accomplished prior to that time.

(e) Required Actions

(1) Within 100 hours time-in-service (TIS) or during the next annual inspection, whichever occurs first:

(i) Review the maintenance records and determine the hours TIS of each pin P/N 369X1004–5 and whether there is a pin life limit listed in the Airworthiness Limitations Section of the applicable maintenance manual or Instructions for Continued Airworthiness (ICA). If the hours TIS on a pin is unknown, remove the pin from service.

(ii) For Model 369A, 369HE, 369HM, and 369HS helicopters, if there is no pin life limit, establish a new life limit of 5,760 hours TIS for each pin P/N 369X1004–5 by making pen-and-ink changes or by inserting a copy of this AD into the Airworthiness Limitations Section of the maintenance manual or the ICA. Remove from service any pin that has 5,760 or more hours TIS.

(iii) For Model 369D, 369E, 369FF, 500N, and 600N helicopters, if there is no pin life limit, establish a new life limit of 7,600 hours TIS for each pin P/N 369X1004–5 by making pen-and-ink changes or by inserting a copy of this AD into the Airworthiness Limitations Section of the maintenance manual or the ICA. Remove from service any pin that has 7,600 or more hours TIS.

(iv) For all model helicopters, add the following statement to the Airworthiness Limitations Section of the maintenance manual or the ICA by making pen-and-ink changes or by inserting a copy of this AD: If interchanged between different model helicopters, the life limit of pin P/N 369X1004–5 must be restricted to the lowest life limit indicated for the helicopter models and serial numbers affected.

(2) Do not install a pin P/N 369X1004–5 on any helicopter before the requirements of this AD have been accomplished.

(f) Alternative Methods of Compliance (AMOC)

(1) The Manager, Los Angeles Aircraft Certification Office, FAA, may approve AMOCs for this AD. Send your proposal to: Galib Abumeri, Aviation Safety Engineer, Transport Airplane Directorate, FAA, 3960 Paramount Blvd., Lakewood, California 90712; telephone (562) 627–5324 or email at *9-ANM-LAACO-AMOC-REQUESTS@faa.gov.*

(2) For operations conducted under a 14 CFR part 119 operating certificate or under 14 CFR part 91, subpart K, we suggest that you notify your principal inspector, or lacking a principal inspector, the manager of the local flight standards district office or certificate holding district office before operating any aircraft complying with this AD through an AMOC.

(g) Additional Information

Aerometals Service Bulletin Aero–SB–1103, dated July 2, 2014, and Aerometals Aero–ICA–101 Supplemental Instructions for Continued Airworthiness, Revision NC, dated May 22, 2014, which are not incorporated by reference, contain additional information about the subject of this AD. For service information identified in this AD, contact Aerometals, 3920 Sandstone Dr., El Dorado Hills, CA 95762, telephone (916) 939–6888, fax (916) 939–6555, *www.aerometals.aero.* You may review a copy of information at the FAA, Office of the Regional Counsel, Southwest Region, 10101 Hillwood Pkwy, Room 6N–321, Fort Worth, TX 76177.

(h) Subject

Joint Aircraft Service Component (JASC) Code: 6210 Main Rotor Blades.

Issued in Fort Worth, Texas, on August 21, 2015.

Lance T. Gant,

Acting Directorate Manager, Rotorcraft Directorate, Aircraft Certification Service.

[FR Doc. 2015–21680 Filed 9–1–15; 8:45 am]

BILLING CODE 4910–13–P

DEPARTMENT OF TRANSPORTATION

Federal Aviation Administration

14 CFR Part 39

[Docket No. FAA–2015–3658; Directorate Identifier 2014–SW–039–AD]

RIN 2120–AA64

Airworthiness Directives; MD Helicopters Inc. (MDHI) Helicopters

AGENCY: Federal Aviation Administration (FAA), DOT.

ACTION: Notice of proposed rulemaking (NPRM).

SUMMARY: We propose to adopt a new airworthiness directive (AD) for certain MDHI Model 369A (Army OH–6A), 369H, 369HE, 369HM, 369HS, 369D, 369E, 369F, 369FF, and 500N helicopters. This proposed AD would require inspecting the auxiliary fuel pump (fuel pump) wire routing in the left-hand fuel cell and corrective action, if necessary. This proposed AD would also require installing a warning decal on the left-hand fuel cell access cover. This proposed AD is prompted by accidents resulting from incorrectly positioned fuel pump wiring within the fuel tank interfering with the operation of the fuel quantity sensor float, which caused an erroneous fuel quantity

indication in the cockpit. The proposed actions are intended to detect and correct routing of the fuel pump wiring to prevent interference with the fuel quantity sensor float, an erroneous fuel quantity indication in the cockpit, and subsequent fuel exhaustion and emergency landing.

DATES: We must receive comments on this proposed AD by November 2, 2015.

ADDRESSES: You may send comments by any of the following methods:

- *Federal eRulemaking Docket:* Go to *http://www.regulations.gov.* Follow the online instructions for sending your comments electronically.
- *Fax:* 202–493–2251.
- *Mail:* Send comments to the U.S. Department of Transportation, Docket Operations, M–30, West Building Ground Floor, Room W12–140, 1200 New Jersey Avenue SE., Washington, DC 20590–0001.
- *Hand Delivery:* Deliver to the ''Mail'' address between 9 a.m. and 5 p.m., Monday through Friday, except Federal holidays.

Examining the AD Docket

You may examine the AD docket on the Internet at *http://www.regulations.gov* or in person at the Docket Operations Office between 9 a.m. and 5 p.m., Monday through Friday, except Federal holidays. The AD docket contains this proposed AD, the economic evaluation, any comments received, and other information. The street address for the Docket Operations Office (telephone 800–647–5527) is in the **ADDRESSES** section. Comments will be available in the AD docket shortly after receipt.

For service information identified in this proposed AD, contact MD Helicopters, Inc., Attn: Customer Support Division, 4555 E. McDowell Rd., Mail Stop M615, Mesa, AZ 85215–9734; telephone 1–800–388–3378; fax 480–346–6813; or at *http://www.mdhelicopters.com.* You may review the referenced service information at the FAA, Office of the Regional Counsel, Southwest Region, 10101 Hillwood Pkwy, Room 6N–321, Fort Worth, Texas 76177.

FOR FURTHER INFORMATION CONTACT: Danny Nguyen, Aerospace Engineer, Los Angeles Aircraft Certification Office, Transport Airplane Directorate, FAA, 3960 Paramount Blvd., Lakewood, California 90712; telephone (562) 627–5247; email *danny.nguyen@faa.gov.*

SUPPLEMENTARY INFORMATION:

Comments Invited

We invite you to participate in this rulemaking by submitting written comments, data, or views. We also invite comments relating to the economic, environmental, energy, or federalism impacts that might result from adopting the proposals in this document. The most helpful comments reference a specific portion of the proposal, explain the reason for any recommended change, and include supporting data. To ensure the docket does not contain duplicate comments, commenters should send only one copy of written comments, or if comments are filed electronically, commenters should submit only one time.

We will file in the docket all comments that we receive, as well as a report summarizing each substantive public contact with FAA personnel concerning this proposed rulemaking. Before acting on this proposal, we will consider all comments we receive on or before the closing date for comments. We will consider comments filed after the comment period has closed if it is possible to do so without incurring expense or delay. We may change this proposal in light of the comments we receive.

Discussion

We propose to adopt a new AD for certain MDHI Model 369A (Army OH–6A), 369H, 369HE, 369HM, 369HS, 369D, 369E, 369F, 369FF, and 500N helicopters. This proposed AD would require inspecting the routing of the fuel pump wiring to determine whether the fuel pump wire is properly wrapped around the fuel inlet hose and correcting the routing of the wiring if it is not. This proposed AD would also require installing a decal regarding correct installation of the fuel pump wiring. This proposed AD is prompted by two accidents and one incident that occurred on Model 369D helicopters resulting from an incorrectly positioned fuel pump wire within the fuel tank interfering with the operation of the fuel quantity sensor float, which caused an erroneous fuel quantity reading in the cockpit. Because the fuel pump is installed on all the affected model helicopters, we are including them in the applicability. According to MDHI, because maintenance personnel caused the incorrect wire routing by failing to follow procedures for installing the fuel pump, it is also necessary to install a decal on the left-hand fuel cell access cover to refer maintenance personnel to the appropriate manual procedures. The proposed actions are intended to detect and correct routing of the fuel pump wiring to prevent interference with the fuel quantity sensor float, an erroneous fuel quantity indication in the cockpit, and subsequent fuel exhaustion and emergency landing.

FAA's Determination

We are proposing this AD because we evaluated all known relevant information and determined that an unsafe condition exists and is likely to exist or develop on other products of these same type designs.

Related Service Information Under 1 CFR Part 51

MDHI issued one Service Bulletin on April 30, 2014, with five different numbers: SB369H–255, SB369E–111, SB500N–049, SB369D–213, and SB369F–098. The service bulletin specifies a one-time inspection of the routing of the fuel pump wire in the left-hand fuel cell and corrective action, if necessary. The service bulletin also specifies installing a warning decal on the left-hand fuel cell access cover that refers personnel to the procedures for routing the fuel pump wire that is contained in the appropriate maintenance manual. The service bulletin states that recent field incidents have occurred where maintenance personnel have not followed the procedures for installation of the fuel pump. Also, the service bulletin states that an incorrectly installed fuel pump wire can interfere with the fuel quantity sensor float, which can result in erroneous fuel quantity indications. To prevent this situation, the service information states that the fuel pump wire must be wrapped around the fuel inlet hose as shown in the applicable maintenance manual. This service information is reasonably available because the interested parties have access to it through their normal course of business or by the means identified in the **ADDRESSES** section of this NPRM.

Proposed AD Requirements

This proposed AD would require, within 100 hours time-in-service:

- Removing the fuel quantity sensor and, using a mirror and light, inspecting to determine whether the fuel pump wire is wrapped around the left-hand fuel cell fuel inlet hose assembly a minimum of one revolution.
  - ○ If the fuel pump wire is correctly wrapped around the left-hand fuel cell fuel inlet hose, installing the fuel quantity sensor and performing a fuel quantity sensor functional test for proper fuel float arm function.
  - ○ If the fuel pump wire is not correctly wrapped around the left-hand fuel cell fuel inlet hose, reinstalling the fuel quantity sensor, routing the fuel pump wire around the left-hand fuel cell fuel inlet hose, and performing a

fuel quantity sensor functional test for proper fuel float arm function.

• Installing a warning decal referencing the fuel pump installation procedures.

Costs of Compliance

We estimate that this proposed AD would affect 833 helicopters of U.S. Registry.

We estimate that operators may incur the following costs in order to comply with this AD. Labor costs are estimated at $85 per hour. Inspecting the fuel pump wire routing and installing a decal would take 3 hours, and parts would cost $20 for a total cost of $275 per helicopter and $229,075 for the U.S. fleet. If required, rerouting the wiring would require 1 work-hour for a total cost of $85 per helicopter.

Authority for This Rulemaking

Title 49 of the United States Code specifies the FAA's authority to issue rules on aviation safety. Subtitle I, section 106, describes the authority of the FAA Administrator. ''Subtitle VII: Aviation Programs,'' describes in more detail the scope of the Agency's authority.

We are issuing this rulemaking under the authority described in ''Subtitle VII, Part A, Subpart III, Section 44701: General requirements.'' Under that section, Congress charges the FAA with promoting safe flight of civil aircraft in air commerce by prescribing regulations for practices, methods, and procedures the Administrator finds necessary for safety in air commerce. This regulation is within the scope of that authority because it addresses an unsafe condition that is likely to exist or develop on products identified in this rulemaking action.

Regulatory Findings

We determined that this proposed AD would not have federalism implications under Executive Order 13132. This proposed AD would not have a substantial direct effect on the States, on the relationship between the national Government and the States, or on the distribution of power and responsibilities among the various levels of government.

For the reasons discussed, I certify this proposed regulation:

1. Is not a ''significant regulatory action'' under Executive Order 12866;

2. Is not a ''significant rule'' under the DOT Regulatory Policies and Procedures (44 FR 11034, February 26, 1979);

3. Will not affect intrastate aviation in Alaska to the extent that it justifies making a regulatory distinction; and

4. Will not have a significant economic impact, positive or negative, on a substantial number of small entities under the criteria of the Regulatory Flexibility Act.

We prepared an economic evaluation of the estimated costs to comply with this proposed AD and placed it in the AD docket.

List of Subjects in 14 CFR Part 39

Air transportation, Aircraft, Aviation safety, Incorporation by Reference, Safety.

The Proposed Amendment

Accordingly, under the authority delegated to me by the Administrator, the FAA proposes to amend 14 CFR part 39 as follows:

PART 39—AIRWORTHINESS DIRECTIVES

■ 1. The authority citation for part 39 continues to read as follows:

Authority: 49 U.S.C. 106(g), 40113, 44701.

§ 39.13 [Amended]

■ 2. The FAA amends § 39.13 by adding the following new airworthiness directive (AD):

MD Helicopters Inc.: Docket No. FAA–2015–3658; Directorate Identifier 2014–SW–039–AD.

(a) Applicability

This AD applies to the following helicopters, certificated in any category: (1) Model 369A (Army OH–6A), 369H, 369HE, 369HM, 369HS, and 369D;

(2) Model 369E with a serial number (S/N) 0001E through 0620E;

(3) Model 369F and 369FF with a S/N 0001FF through 0212FF, 0600FF, 0601FF, 0602FF, and 0700FF through 0711FF) and with an auxiliary fuel pump part number (P/N) 369A8143–3 installed; and

(4) Model 500N (S/N LN001 through LN0111).

(b) Unsafe Condition

This AD defines the unsafe condition as incorrect routing of the auxiliary fuel pump (fuel pump) wiring. This condition could result in an erroneous fuel quantity indication in the cockpit and subsequent fuel exhaustion and emergency landing.

(c) Comments Due Date

We must receive comments by November 2, 2015.

(d) Compliance

You are responsible for performing each action required by this AD within the specified compliance time unless it has already been accomplished prior to that time.

(e) Required Actions

Within 100 hours time-in-service:

(1) Remove the fuel quantity sensor by following the Accomplishment Instructions, paragraph 2.B., of MD Helicopters Service Bulletin SB369H–255/SB369E111/SB500N–049/SB369D–213/SB369F–098, dated April 30, 2014 (SB). Using a mirror and light, inspect the routing of the fuel pump wire in the area depicted in Figure 2 of the SB and determine whether the fuel pump wire is wrapped around the left-hand fuel cell fuel inlet hose assembly a minimum of one revolution.

(i) If the fuel pump wire is wrapped around the left-hand fuel cell fuel inlet hose a minimum of one revolution, install the fuel quantity sensor and perform a fuel quantity sensor functional test for proper fuel float arm function.

(ii) If the fuel pump wire is not wrapped around the left-hand fuel cell fuel inlet hose a minimum of one revolution, install the fuel quantity sensor, route the fuel pump wire around the left-hand fuel cell fuel inlet hose by following paragraphs 2.E.(1) through 2.E.(8) of the SB, and perform a fuel quantity sensor functional test for proper fuel float arm function.

(2) Install start pump warning decal, P/N MHS5861–66 or equivalent, on the left-hand fuel cell cover by following paragraph 2.G. of the SB.

(f) Alternative Methods of Compliance (AMOC)

(1) The Manager, Los Angeles Aircraft Certification Office, FAA, may approve AMOCs for this AD. Send your proposal to: Danny Nguyen, Aerospace Engineer Transport Airplane Directorate, FAA, 3960 Paramount Blvd., Lakewood, California 90712; telephone (562) 627–5247; email *9-ANM-LAACO-AMOC-REQUESTS@faa.gov*.

(2) For operations conducted under a 14 CFR part 119 operating certificate or under 14 CFR part 91, subpart K, we suggest that you notify your principal inspector, or lacking a principal inspector, the manager of the local flight standards district office or certificate holding district office before operating any aircraft complying with this AD through an AMOC.

(g) Subject

Joint Aircraft Service Component (JASC) Code: 2840 Fuel Quantity Indicating System.

Issued in Fort Worth, Texas, on August 21, 2015.

Lance T. Gant,

Acting Directorate Manager, Rotorcraft Directorate, Aircraft Certification Service.

[FR Doc. 2015–21686 Filed 9–1–15; 8:45 am]

BILLING CODE 4910–13–P

DEPARTMENT OF TRANSPORTATION

Federal Aviation Administration

14 CFR Part 91

[Docket No.: FAA–2015–3304; Notice No. 15–07]

RIN 2120–AK66

Temporary Flight Restrictions in the Proximity of Launch and Reentry Operations

AGENCY: Federal Aviation Administration (FAA), DOT.

ACTION: Notice of proposed rulemaking (NPRM).

SUMMARY: This proposed rulemaking would expand the temporary flight restriction provisions for launch, reentry, and amateur rocket operations and make such temporary flight restrictions applicable to all aircraft—including non-U.S. registered aircraft. The FAA also proposes revised language for consistency with other temporary flight restriction provisions and commercial space regulations and definitions. This proposed action would enhance safety in the affected airspace and would improve the readability of temporary flight restriction requirements.

DATES: Send comments on or before November 2, 2015.

ADDRESSES: Send comments identified by docket number FAA–2015–3304 using any of the following methods:

- *Federal eRulemaking Portal:* Go to *http://www.regulations.gov* and follow the online instructions for sending your comments electronically.
- *Mail:* Send comments to Docket Operations, M–30; U.S. Department of Transportation (DOT), 1200 New Jersey Avenue SE., Room W12–140, West Building Ground Floor, Washington, DC 20590–0001.
- *Hand Delivery or Courier:* Take comments to Docket Operations in Room W12–140 of the West Building Ground Floor at 1200 New Jersey Avenue SE., Washington, DC, between 9 a.m. and 5 p.m., Monday through Friday, except Federal holidays.
- *Fax:* Fax comments to Docket Operations at 202–493–2251.

Privacy: In accordance with 5 U.S.C. 553(c), DOT solicits comments from the public to better inform its rulemaking process. DOT posts these comments, without edit, including any personal information the commenter provides, to *www.regulations.gov,* as described in the system of records notice (DOT/ALL–14 FDMS), which can be reviewed at *www.dot.gov/privacy.*

Docket: Background documents or comments received may be read at *http://www.regulations.gov* at any time. Follow the online instructions for accessing the docket or go to the Docket Operations in Room W12–140 of the West Building Ground Floor at 1200 New Jersey Avenue SE., Washington, DC, between 9 a.m. and 5 p.m., Monday through Friday, except Federal holidays.

FOR FURTHER INFORMATION CONTACT: For technical questions concerning this action, contact Paul Eure, Airspace Regulations Team, AJV–113, Federal Aviation Administration, 800 Independence Avenue SW., Washington, DC 20591; telephone (202) 267–8745; email *paul.eure@faa.gov.*

For legal questions concerning this action, contact Robert Frenzel, Operations Law Branch, AGC–220, Federal Aviation Administration, 800 Independence Avenue SW., Washington, DC 20591; telephone (202) 267–3073; email *Robert.Frenzel@faa.gov.*

SUPPLEMENTARY INFORMATION:

Authority for This Rulemaking

The FAA's authority to issue rules on aviation safety is found in Title 49 of the United States Code. Subtitle I, Section 106, describes the authority of the FAA Administrator. Subtitle VII, Aviation Programs, describes in more detail the scope of the agency's authority.

This rulemaking is promulgated under the authority described in Subtitle VII, Part A, Subpart I, Section 40103, Sovereignty and use of airspace, and Subpart III, Section 44701, General requirements. Under section 40103, the FAA is charged with prescribing regulations to ensure the safety of aircraft and the efficient use of the navigable airspace. Under section 44701, the FAA is charged with prescribing regulations to ensure safety in air commerce.

This proposed regulation is within the scope of sections 40103 and 44701 because restricting aircraft operations from the area in which launch, reentry, and amateur rocket operations occur supports aviation safety and the efficient use of navigable airspace.

The Commercial Space Launch Act of 1984, as codified and amended at 51 U.S.C. Subtitle V—Commercial Space Transportation, Ch. 509, Commercial Space Launch Activities, 51 U.S.C. 50901–50923 (Chapter 509), authorizes the Department of Transportation and thus the FAA, through delegations, to oversee, license, and regulate commercial launch and reentry activities, and the operation of launch and reentry sites as carried out by U.S. citizens or within the United States. 51 U.S.C. 50904, 50905. Chapter 509 directs the FAA to exercise this responsibility consistent with public health and safety, safety of property, and the national security and foreign policy interests of the United States. 51 U.S.C. 50905. The FAA is also responsible for encouraging, facilitating, and promoting commercial space launches by the private sector. 51 U.S.C. 50903.

I. Executive Summary

14 CFR 91.143 authorizes the FAA to issue Notices to Airmen (NOTAM) prohibiting a person from operating any aircraft of U.S. registry in areas designated in the NOTAM for space flight operations. The FAA proposes to amend this provision to apply to all aircraft.

At the time of the promulgation of § 91.143, recovery operations were conducted outside of U.S. territorial boundaries, and therefore, the FAA could only restrict U.S. registered aircraft or aircraft flown by pilots using a FAA pilot certificate. This regulation, clarified in 1984, included launches (and potential emergency recovery operations) in support of the National Aeronautics and Space Administration (NASA) Space Shuttle program.

However, the initial applicability of this regulation does not adequately address present day space launch and recovery operations that are increasingly conducted within the boundaries of U.S. territory. Therefore, the agency proposes to amend this rule to better address present day operations to ensure that all aircraft—not only U.S. registered aircraft or aircraft flown by pilots using a FAA pilot certificate—are restricted from operating in airspace designated for launch, reentry, or amateur rocket operations.

Additionally, this amendment would allow the FAA to issue a NOTAM to designate a temporary flight restriction (TFR) for launch, reentry, or amateur rocket operations involving Class 2 or 3 amateur rockets when it determines a TFR is necessary to maintain safety.

Lastly, the FAA proposes other language changes that would align the language used in § 91.143 with the terminology used in Chapter 509 and the FAA space transportation regulations and definitions. For example, the terms ''launch'' and ''reentry'' are defined in 14 CFR 401.5 and are normally used to broadly categorize these types of operations. The FAA, therefore, proposes to replace ''space flight operations'' with ''launch, reentry, or amateur rocket operation.''

The FAA believes these revisions would strengthen the understandability of these requirements while enhancing safety in the affected airspace.

II. Background

The language of ''flight limitations in the proximity of space flight operations'' as utilized in 14 CFR 91.143 was first promulgated in 1964 to support NASA's Gemini and Apollo space operations. By restricting non-essential aircraft from the designated recovery area, the FAA intended to ensure the safe recovery of spacecraft while mitigating the risk of an aircraft collision. At the time this rule was promulgated most of these recovery operations occurred outside of U.S. territorial airspace and the FAA could restrict only U.S. registered aircraft or aircraft piloted under an FAA-issued airman certificate. These expanded regulations were clarified in 1984, to include launch operations (and potential emergency recovery operations) in support of NASA's space shuttle program.

The FAA now issues TFRs only for the airspace over the territory of the United States extending out to 12 nautical miles from the coastline. Since rule promulgation in 1984, an increasing number of rocket launches now occur over U.S. territorial airspace. The FAA therefore believes it is necessary to update regulations to align them with current practice.

In recent years, because technological changes have resulted in an increased growth of larger amateur rockets with greater power, the FAA has issued NOTAMs under § 91.143 to designate TFRs to segregate Class 2 and 3 amateur rockets from all other users of the National Airspace System (NAS). Class 2 and 3 amateur rockets operated under 14 CFR part 101 are capable of operating up to 93.2 miles with multiple stages. Persons intending to operate a Class 2 or 3 rocket in a manner that requires a waiver to 14 CFR part 101 subpart C, must submit a proposal for waiver or authorization to the FAA. This includes proposals to launch a Class 2 or 3 amateur rockets into controlled airspace, which may require the FAA to implement a TFR to ensure safety.

The process for the development of a TFR is extensive. For example, commercial space operators are required to file an application for a permit or license in order to conduct commercial space operations. The FAA reviews the application to determine ground and airborne hazard areas. The FAA then analyzes these proposals for safety impact, and then issues a permit or license for the operation. This license or permit application includes a letter of agreement between the operator and Air Traffic Control that may include special provisions that determine the area covered by a TFR along with detailed operational directives. Accordingly, in these circumstances, the FAA issues a NOTAM to designate a TFR that encompasses the hazardous areas necessary to avoid collisions with other NAS users.

While TFRs may impose an inconvenience to NAS users, they are necessary to provide the highest level of safety. From an efficiency standpoint, the FAA strives to integrate all operations into the NAS. The operations of most launch vehicles could result in scenarios that are hazardous to other NAS users that may be in the vicinity of the operation. The use of a TFR for the segregation of other NAS users from commercial space operations and Class 2 and 3 amateur rockets is key to ensuring safety—when it is determined that a TFR is required.

Therefore, by expanding the applicability of the TFR provision to amateur rocket operations, this proposed rulemaking would codify the FAA's ability to establish a TFR for a Class 2 or 3 amateur rocket operation, when it determines a TFR is necessary to maintain safety.

III. Discussion of the Proposal

A. Applicability

The FAA has frequently used, without incident or accident, TFRs to segregate hazardous launch, reentry, and amateur rocket operations from all other NAS users (operating by visual and instrument flight rules). While § 91.143 was intended to support NASA and DOD space operations outside U.S. airspace (over the ocean), in recent years commercial space and amateur rocket operations have increased over U.S. territorial airspace. The FAA issues TFRs only for the airspace over the territory of the U.S. extending 12 nautical miles from the coastline. Applying restrictions to all aircraft within this area is within the FAA's statutory authority and is consistent with the purpose of these restrictions (*i.e.,* to mitigate the risk of aircraft collision by segregating launch, reentry and amateur rocket operations from other NAS users).

Although current practice restricts all aircraft from areas designated by TFRs for launch, reentry and amateur rocket operations, this proposed change would ensure the applicability of the flight restrictions to U.S. and non-U.S. registered aircraft from entering into areas designated by TFR for launch, reentry, and amateur rocket operations. Accordingly, the FAA proposes to expand the applicability of § 91.143 to all aircraft in order to mitigate the safety risk of aircraft operations in proximity to launch, reentry, and Class 2 or 3 amateur rocket operations.

B. Title and Regulatory Change

The FAA proposes revisions to the title and content of § 91.143 for: (1) Consistency with other TFR provisions in 14 CFR part 91, (2) consistency with the commercial space regulations in 14 CFR chapter III, and (3) to include Class 2 and 3 amateur rockets.

Specifically, the FAA proposes replacing the title of § 91.143 ''Flight limitation in the proximity of space flight operations'' with ''Temporary Flight Restrictions in the Proximity of Launch and Reentry Operations,'' a title that more accurately reflects current practice and includes the use of the terms ''temporary flight restrictions'' and ''launch and reentry operations.''

The FAA also proposes replacing terms in the content of § 91.143, such as ''space flight operations'' with ''launch, reentry, or amateur rocket operations.'' ''Launch'' and ''reentry'' are defined in 14 CFR § 401.5 and are normally used to describe launch or reentry vehicles going to or returning from orbit or outer space, or operations associated with orbital and suborbital flight. Current references to ''space operations'' encompass both launch and reentry.

Finally, to align regulatory language with current practice, the FAA proposes the inclusion of Class 2 and 3 amateur rockets for TFR issuance when the FAA determines the proposed operation presents a safety risk. A certificate of waiver or authorization for Class 2 or 3 amateur rocket launch would identify the designated hazard area used to determine the area to be covered by the TFR.

Although these revisions address commercial space and amateur rocket operations, TFR provisions would continue to be used for DOD and NASA space operations as originally intended.

IV. Regulatory Notices and Analyses

A. Regulatory Evaluation

Changes to Federal regulations must undergo several economic analyses. First, Executive Order 12866 and Executive Order 13563 direct that each Federal agency shall propose or adopt a regulation only upon a reasoned determination that the benefits of the intended regulation justify its costs. Second, the Regulatory Flexibility Act of 1980 (*Pub. L.* 96–354) requires agencies to analyze the economic impact of regulatory changes on small

entities. Third, the Trade Agreements Act (*Pub. L.* 96–39) prohibits agencies from setting standards that create unnecessary obstacles to the foreign commerce of the United States. In developing U.S. standards, the Trade Act requires agencies to consider international standards and, where appropriate, that they be the basis of U.S. standards. Fourth, the Unfunded Mandates Reform Act of 1995 (*Pub. L.* 104–4) requires agencies to prepare a written assessment of the costs, benefits, and other effects of proposed or final rules that include a Federal mandate likely to result in the expenditure by State, local, or tribal governments, in the aggregate, or by the private sector, of $100 million or more annually (adjusted for inflation with base year of 1995). This portion of the preamble summarizes the FAA's analysis of the economic impacts of this proposed rule.

Department of Transportation Order DOT 2100.5 prescribes policies and procedures for simplification, analysis, and review of regulations. If the expected cost impact is so minimal that a proposed or final rule does not warrant a full evaluation, this order permits that a statement to that effect and the basis for it to be included in the preamble if a full regulatory evaluation of the cost and benefits is not prepared. Such a determination has been made for this proposed rule. The reasoning for this determination follows.

This proposed rule would expand the TFR provisions for launch, reentry, and amateur rocket operations. This proposed rule would formalize the current practice and apply the TFR to non-U.S. registered aircraft. No actions are required for U.S. entities. Since this proposed rule would merely amend language to improve the readability of the TFR requirements, formalize that current practice, and apply these restrictions to non-U.S. registered aircraft. The expected outcome would be a minimal impact with positive net benefits, and a regulatory evaluation was not prepared. The FAA requests comments with supporting justification about the FAA determination of minimal impact.

The FAA has therefore, determined that this proposed rule is not a ''significant regulatory action'' as defined in section 3(f) of Executive Order 12866, and is not ''significant'' as defined in DOT's Regulatory Policies and Procedures.

B. Regulatory Flexibility Determination

The Regulatory Flexibility Act of 1980 (*Pub. L.* 96–354) (RFA) establishes ''as a principle of regulatory issuance that agencies shall endeavor, consistent with the objectives of the rule and of applicable statutes, to fit regulatory and informational requirements to the scale of the businesses, organizations, and governmental jurisdictions subject to regulation.'' To achieve this principle, agencies are required to solicit and consider flexible regulatory proposals and to explain the rationale for their actions to assure that such proposals are given serious consideration.'' The RFA covers a wide-range of small entities, including small businesses, not-for-profit organizations, and small governmental jurisdictions.

Agencies must perform a review to determine whether a rule will have a significant economic impact on a substantial number of small entities. If the agency determines that it will, the agency must prepare a regulatory flexibility analysis as described in the RFA.

However, if an agency determines that a rule is not expected to have a significant economic impact on a substantial number of small entities, section 605(b) of the RFA provides that the head of the agency may so certify and a regulatory flexibility analysis is not required. The certification must include a statement providing the factual basis for this determination, and the reasoning should be clear.

Since all U.S. entities are covered by current practice, this proposed rule would expand the applicability of TFR provisions for launch, reentry and amateur rocket operations to all aircraft, including non-U.S. registered aircraft. The expected outcome would have only a minimal impact on any small entity affected by this rulemaking action. Therefore, as provided in section 605(b), the head of the FAA certifies that this rulemaking will not result in a significant economic impact on a substantial number of small entities.

C. International Trade Impact Assessment

The Trade Agreements Act of 1979 (*Pub. L.* 96–39), as amended by the Uruguay Round Agreements Act (*Pub. L.* 103–465), prohibits Federal agencies from establishing standards or engaging in related activities that create unnecessary obstacles to the foreign commerce of the United States. Pursuant to these Acts, the establishment of standards is not considered an unnecessary obstacle to the foreign commerce of the United States, so long as the standard has a legitimate domestic objective, such as the protection of safety, and does not operate in a manner that excludes imports that meet this objective. The statute also requires consideration of international standards and, where appropriate, that they be the basis for U.S. standards. The FAA has assessed the potential effect of this proposed rule and determined that it would responds to a domestic safety objective and not considered an unnecessary obstacle to trade.

D. Unfunded Mandates Assessment

Title II of the Unfunded Mandates Reform Act of 1995 (*Pub. L.* 104–4) requires each Federal agency to prepare a written statement assessing the effects of any Federal mandate in a proposed or final agency rule that may result in an expenditure of $100 million or more (in 1995 dollars) in any one year by State, local, and tribal governments, in the aggregate, or by the private sector; such a mandate is deemed to be a ''significant regulatory action.'' The FAA currently uses an inflation-adjusted value of $155 million in lieu of $100 million. This proposed rule does not contain such a mandate; therefore, the requirements of Title II of the Act do not apply.

E. Paperwork Reduction Act

The Paperwork Reduction Act of 1995 (44 U.S.C. 3507(d)) requires that the FAA consider the impact of paperwork and other information collection burdens imposed on the public. The FAA has determined that there would be no new requirement for information collection associated with this proposed rule.

F. International Compatibility and Cooperation

(1) In keeping with U.S. obligations under the Convention on International Civil Aviation, it is FAA policy to conform to International Civil Aviation Organization (ICAO) Standards and Recommended Practices to the maximum extent practicable. The FAA has determined that there are no ICAO Standards and Recommended Practices that correspond to these proposed regulations.

G. Environmental Analysis

FAA Order 1050.1F identifies FAA actions that are categorically excluded from preparation of an environmental assessment or environmental impact statement under the National Environmental Policy Act in the absence of extraordinary circumstances. The FAA has determined this rulemaking action qualifies for the categorical exclusion identified in paragraph 312f and involves no extraordinary circumstances.

V. Executive Order Determinations

A. Executive Order 13132, Federalism

The FAA has analyzed this proposed rule under the principles and criteria of Executive Order 13132, Federalism. The agency has determined that this action would not have a substantial direct effect on the States, or the relationship between the Federal Government and the States, or on the distribution of power and responsibilities among the various levels of government, and, therefore, would not have Federalism implications.

B. Executive Order 13211, Regulations That Significantly Affect Energy Supply, Distribution, or Use

The FAA analyzed this proposed rule under Executive Order 13211, Actions Concerning Regulations that Significantly Affect Energy Supply, Distribution, or Use (May 18, 2001). The agency has determined that it would not be a ''significant energy action'' under the executive order and would not be likely to have a significant adverse effect on the supply, distribution, or use of energy.

C. Executive Order 13609, Promoting International Regulatory Cooperation

Executive Order 13609, Promoting International Regulatory Cooperation, promotes international regulatory cooperation to meet shared challenges involving health, safety, labor, security, environmental, and other issues and to reduce, eliminate, or prevent unnecessary differences in regulatory requirements. The FAA has analyzed this action under the policies and agency responsibilities of Executive Order 13609, and has determined that this action would have no effect on international regulatory cooperation.

VI. Additional Information

A. Comments Invited

The FAA invites interested persons to participate in this rulemaking by submitting written comments, data, or views. The agency also invites comments relating to the economic, environmental, energy, or federalism impacts that might result from adopting the proposals in this document. The most helpful comments reference a specific portion of the proposal, explain the reason for any recommended change, and include supporting data. To ensure the docket does not contain duplicate comments, commenters should send only one copy of written comments, or if comments are filed electronically, commenters should submit only one time.

The FAA will file in the docket all comments it receives, as well as a report summarizing each substantive public contact with FAA personnel concerning this proposed rulemaking. Before acting on this proposal, the FAA will consider all comments it receives on or before the closing date for comments. The FAA will consider comments filed after the comment period has closed if it is possible to do so without incurring expense or delay. The agency may change this proposal in light of the comments it receives.

Proprietary or Confidential Business Information: Commenters should not file proprietary or confidential business information in the docket. Such information must be sent or delivered directly to the person identified in the **FOR FURTHER INFORMATION CONTACT** section of this document, and marked as proprietary or confidential. If submitting information on a disk or CD ROM, mark the outside of the disk or CD ROM, and identify electronically within the disk or CD ROM the specific information that is proprietary or confidential.

Under 14 CFR 11.35(b), if the FAA is aware of proprietary information filed with a comment, the agency does not place it in the docket. It is held in a separate file to which the public does not have access, and the FAA places a note in the docket that it has received it. If the FAA receives a request to examine or copy this information, it treats it as any other request under the Freedom of Information Act (5 U.S.C. 552). The FAA processes such a request under Department of Transportation procedures found in 49 CFR part 7.

B. Availability of Rulemaking Documents

An electronic copy of rulemaking documents may be obtained from the Internet by—

1. Searching the Federal eRulemaking Portal (*http://www.regulations.gov*);
2. Visiting the FAA's Regulations and Policies Web page at *http://www.faa.gov/regulations_policies* or
3. Accessing the Government Printing Office's Web page at *http://www.gpo.gov/fdsys/.*

Copies may also be obtained by sending a request to the Federal Aviation Administration, Office of Rulemaking, ARM–1, 800 Independence Avenue SW., Washington, DC 20591, or by calling (202) 267–9677. Commenters must identify the docket or notice number of this rulemaking.

All documents the FAA considered in developing this proposed rule, including economic analyses and technical reports, may be accessed from the Internet through the Federal eRulemaking Portal referenced in item (1) above.

List of Subjects in 14 CFR Part 91

Air traffic control, Aircraft, Airmen, Aviation safety.

The Proposed Amendment

In consideration of the foregoing, the Federal Aviation Administration proposes to amend chapter I of title 14, Code of Federal Regulations as follows:

PART 91—GENERAL OPERATING AND FLIGHT RULES

■ 1. The authority citation for part 91 is revised to read as follows:

Authority: 49 U.S.C. 106(f), 106(g), 1155, 40101, 40103, 40105, 40113, 40120, 44101, 44111, 44701, 44704, 44709, 44711, 44712, 44715, 44716, 44717, 44722, 46306, 46315, 46316, 46504, 46506–46507, 47122, 47508, 47528–47531, 47534, articles 12 and 29 of the Convention on International Civil Aviation (61 Stat. 1180), (126 Stat. 11).

■ 2. Revise § 91.143 to read as follows:

§ 91.143 Temporary flight restrictions in the proximity of launch and reentry operations.

No person may operate an aircraft contrary to a Temporary Flight Restriction established by the Administrator in a Notice to Airman (NOTAM) within an area designated for a launch, reentry, or amateur rocket operation, unless authorized by ATC.

Issued under authority provided by 49 U.S.C. 106(f), 40103(b), and 44701(a) in Washington, DC, on August 18, 2015.

Jodi S. McCarthy,

Director, Airspace Services.

[FR Doc. 2015–21567 Filed 9–1–15; 8:45 am]

BILLING CODE 4910–13–P

CONSUMER PRODUCT SAFETY COMMISSION

16 CFR Part 1211

[Docket No. CPSC–2015–0025]

Safety Standard for Automatic Residential Garage Door Operators

AGENCY: U.S. Consumer Product Safety Commission.

ACTION: Notice of proposed rulemaking.

SUMMARY: The Consumer Product Safety Commission (''Commission'' or ''CPSC'') is proposing to amend the regulations for *Safety Standard for Automatic Residential Garage Door Operators* to reflect changes made by Underwriters Laboratories, Inc. (''UL''), in the entrapment protection provisions in UL's standard UL 325, Sixth Edition,

''Standard for Safety for Door, Drapery, Gate, Louver, and Window Operators and Systems.''

DATES: Submit comments by November 16, 2015.

ADDRESSES: You may submit comments, identified by Docket No. CPSC–2015–0025, by any of the following methods:

Electronic Submissions: Submit electronic comments to the Federal eRulemaking Portal at: *http://www.regulations.gov.* Follow the instructions for submitting comments. The Commission does not accept comments submitted by electronic mail (email), except through *www.regulations.gov.* The Commission encourages you to submit electronic comments by using the Federal eRulemaking Portal, as described above.

Written Submissions: Submit written submissions by mail/hand delivery/courier to: Office of the Secretary, Consumer Product Safety Commission, Room 820, 4330 East West Highway, Bethesda, MD 20814; Telephone (301) 504–7923.

Instructions: All submissions received must include the agency name and docket number for this notice. All comments received may be posted without change, including any personal identifiers, contact information, or other personal information provided, to: *http://www.regulations.gov.* Do not submit confidential business information, trade secret information, or other sensitive or protected information that you do not want to be available to the public. If furnished at all, such information should be submitted in writing.

Docket: For access to the docket to read background documents or comments received, go to: *http://www.regulations.gov,* and insert the docket number CPSC–2015–0025, into the ''Search'' box, and follow the prompts.

FOR FURTHER INFORMATION CONTACT: Vince Amodeo, Directorate for Engineering Sciences, Consumer Product Safety Commission, 5 Research Place Rockville, MD 20850; Telephone (301) 987–2301 or email: *vamodeo@cpsc.gov.*

SUPPLEMENTARY INFORMATION:

A. Background

The Commission has regulations for residential garage door operators (''GDOs'') to protect consumers from the risk of entrapment. 16 CFR part 1211. The Commission first issued the GDO standard in 1991 at the direction of the Consumer Product Safety Improvement Act of 1990 (''Improvement Act''), Public Law 101–608. Section 203 of the Improvement Act mandated that the entrapment protection requirements of the 1988 version of UL's 325, Third Edition, ''Standard for Safety for Door, Drapery, Gate, Louver, and Window Operators and Systems,'' be considered a consumer product safety rule under the Consumer Product Safety Act. Section 203(c) of the Improvement Act established procedures for the Commission to revise the Commission's GDO standard. When UL revises the entrapment protection requirements of UL 325, UL must notify the Commission of the revision, and that revision ''shall be incorporated in the consumer product safety rule . . . unless, within 30 days of such notice, the Commission notifies [UL] that the Commission has determined that such revision does not carry out the purposes of subsection (b)'' [of section 203 of the Improvement Act which mandated the UL 325 entrapment protection requirements initially]. As provided in the Improvement Act, the Commission has revised the GDO standard after UL has notified the Commission of changes to UL 325's entrapment protection requirements several times in the past.

The Commission last updated the mandatory rule in 2007, to reflect changes made to the entrapment protection provisions of UL 325 up to that time.

B. Changes to UL 325 and the Existing Regulation

Since the last update to the current mandatory rule in 2007, UL has published 11 revisions to UL 325, including the publication of the Sixth Edition in October 2013, and another revision to the Sixth Edition in June 2015. On November 4, 2013, UL notified the CPSC that UL had revised the entrapment protection requirements of UL 325 and had published a Sixth Edition of that standard on October 14, 2013. On June 4, 2015, UL notified the Commission that UL published a revision to UL 325 Sixth Edition on May 25, 2015. On November 27, 2013, and on June 24, 2015, CPSC staff submitted briefing packages to the Commission explaining the latest revisions to the UL standard and the basis for staff's conclusion that the revisions enhance entrapment protections and are likely to reduce the possibility that children will become entrapped by partially open garage doors. On December 3, 2013, and on June 30, 2015, the Commission voted to accept the revisions to UL 325, Sixth Edition. The Commission also directed staff to prepare and send to the Commission a draft revision of 16 CFR part 1211 that would include the revised UL requirements in the codified text of the existing rule.

In accordance with the Commission's previous votes, the Commission is issuing this proposed rule that would amend the mandatory GDO rule at 16 CFR part 1211 to include the revisions to the entrapment protection requirements of UL 325.

Since the last revision of the rule in 2007, UL has made several substantive changes to the entrapment protection requirements of UL 325. These changes allow for new technological advances but do not modify the requirements for GDOs. The proposed rule modifies appropriate sections of the Commission's GDO standard to incorporate the new UL requirements, as discussed in the summary of changes to the existing rule below.

C. Description of the Proposed Rule

All of the proposed revisions are in subpart A of the GDO standard. The Commission is not proposing any changes to the certification (subpart B) or recordkeeping (subpart C) provisions of the GDO standard. Proposed revisions to some sections of the rule are fairly extensive. For those sections, §§ 1211.2 and 1211.4 through 1211.17 of the existing regulation, the proposed rule would either revise portions of the existing regulation or replace those sections completely and renumber them.

In addition, the proposed rule adds two new sections (§§ 1211.14 (unattended operation requirements) and 1211.15 (vertically moving combination rigid one-piece overhead residential garage door and operator system)). The proposal renumbers existing §§ 1211.14 through 1211.17 regarding instructions, labeling, and marking to become §§ 1211.16 through 1211.19 in the proposed rule. The proposed rule also includes some technical edits and revisions to correct typographical errors.

UL added requirements for certain types of GDOs that were not previously covered by the GDO standard. Most of the proposed revisions to the GDO standard involve adding requirements for these types of GDOs and making changes related to these provisions. In addition, UL added requirements for unattended operation of GDOs and for wireless control and communications. Finally, UL made several editorial changes throughout the standard to provide better descriptions of the appropriate requirements and test conditions, and UL also revised dimensional tolerances on test fixtures so that the fixtures can be manufactured using generally available machine tools.

As discussed in more detail below, the Commission proposes to incorporate these changes into the Commission's GDO standard at 16 CFR part 1211.

GDOs that Open Horizontally. Because UL added requirements for GDOs that open horizontally, the Commission proposes revisions to differentiate between requirements for horizontal and vertical opening GDOs (§ 1211.6(d)). Entrapment protection requirements are similar for vertically and horizontally opening GDOs. UL added and clarified test requirements to address entrapment protection for either vertical or horizontal movement and clarified wording throughout the standard, such as replacing ''downward movement'' with ''closing movement,'' and adding ''vertically'' or ''horizontally'' moving, where appropriate. Additionally, UL clarified secondary entrapment protection requirements for vertically and horizontally opening GDOs. The proposed rule incorporates these changes (§ 1211.8).

Combination Sectional Overhead GDOs. UL added requirements for combination sectional overhead GDOs, which are a door and operator combination, in which the door and hardware are an integral part of the operator, and in which the operator does not exert a driving force on the door in the closing direction. The proposed rule incorporates these changes (§ 1211.6(c)). Under UL's revised provisions, this type of GDO must comply with the common requirements for GDOs; plus, they must comply with the requirements found in the American National Standard/Door and Access Systems Manufacturers ANSI/DASMA 102–2004, *Specifications for Sectional Doors,* 2004 revision, dated October 22, 2004, which the Commission proposes to incorporate by reference in the proposed rule (§ 1211.6(c)). ANSI/DASMA 102–2004 provides requirements for installation/operation, maintenance, durability, and identification of GDO systems with the name and address of the door system manufacturer, loads, in addition to general requirements. This ANSI/DASMA standard is available from ANSI/DASMA, or the standard may be examined at the offices of the **Federal Register**.

Additionally, the revised UL standard requires that the instructions for combination sectional overhead GDOs must specify: (1) the operator by manufacturer and model; (2) the doors by manufacturer, model, and maximum and minimum door width and height required for compliance to the entrapment protection requirements; (3) the hardware required to meet the entrapment protection requirements (§ 1211.16(a)(13)); and (4) how to properly counterbalance the door ((§ 1211.16(a)(14)). Finally, combination sectional overhead GDOs must be provided with permanent labels that contain specific warnings (§ 1211.17(k)) and markings (§ 1211.17 (m)). The proposed rule includes these requirements in the sections indicated.

Unattended Operation of GDOs. UL added requirements for unattended operation of GDOs, which is permitted if additional safety features are provided. The proposed rule includes these requirements (new § 1211.14). Under UL's revised provisions, unattended operation is allowable only if proper installation instructions and markings are provided. Unattended GDOs must require one or more intentional actions to function and must require an audible and visual alarm that must signal for 5 seconds before door movement. Unattended operation is not permitted on one-piece or swinging garage doors. The word ''bulb'' is changed to ''light'' to address newer technologies that may use LEDs that may not be considered ''bulbs'' and clarifies that the visual or audio alarm during unattended operation does not require monitoring.

Combination Rigid One-Piece Overhead GDOs. UL added requirements for combination rigid one-piece overhead GDOs, which are a door and operator combination in which the door is constructed of one rigid piece. The proposed rule includes these requirements (new § 1211.15). Under UL's revised provisions, this type of GDO must comply with the common requirements for GDOs; plus, the speed of the door edge during movement must not exceed 6 inches per second. This type of GDO also must provide two additional independent secondary entrapment-protection devices, including a minimum of two sensors. Additionally, these GDOs must provide a means of mechanically detaching both door operators from the door and must have an interlock to de-energize the operator when detached. Finally, the installation instructions for combination rigid one-piece GDOs must specify attachment points for installation. The proposed rule includes these requirements for instructions (§ 1211.16(b)(2)(13)).

Wireless Control and Communication. UL added requirements for wireless control (§§ 1211.8(d) and 1211.10(f)), including additional tests for battery operation (§ 1211.10(g)) and wireless communication (§ 1211.10(h)). The proposed rule includes these requirements at the sections indicated.

Photoelectric Sensors. UL added requirements for alternate sources of light for the photoelectric sensor ambient light test. The proposed rule includes these requirements (§ 1211.11(e)(2)). The current test method specifies a specific DXC–RFL–2 flood lamp, which is becoming difficult to obtain in the marketplace. Instead, the proposed requirement would specify the minimum required wattage (500W) and maximum color temperature (3600K) of the bulb, to allow for available light sources without affecting the test results.

UL added a new test method for GDOs that use an array of ''vertical'' photoelectric sensors as a non-contact external entrapment protection device. The proposed rule includes this new test method (§ 1211.11 (d)(4) and new paragraph (f)). The new method verifies that the ''vertical'' sensors function properly.

Clarifications. UL made several clarifications throughout the standard to improve clarity and describe test conditions better. The proposed rule includes these clarifications:

- Electronic instructions (§ 1211.16(a)(10)) may be provided on alternate sources, such as CD–ROM, USB flash drive, or company Web site.
- For GDOs for one-piece doors that have an unattended operation function, certain markings are not required if the GDO automatically senses door operation (§§ 1211.16(b)(1)(ii), 1211.17(h), and 1211.18(m)),
- The requirements for UL markings for voltage, frequency, and input are clarified (§ 1211.18(b)(3) and (4)).
- UL marking requirements for risk of entrapment on GDOs that have user adjustments (§ 1211.18(i)) shall be located where visible to the user when making adjustments.
- Requirements for the external entrapment protection device (*i.e.,* photoelectric sensor and edge sensor) test criteria (§ 1211.10(b), (c), and (e) and § 1211.11(d)(4)) are clarified, and the requirements for determining whether the system is operating normally before and after each test are made consistent throughout the standard.
- The requirements for the switch or relay used in the entrapment protection circuit (§ 1211.6(f)) are clarified by stating that the switch or relay must be capable of operating at a minimum cycling of 100,000 cycles, as intended in the GDO without failing, *and* that when/if failure does occur in actual use (at any cycle count), failure shall result in preventing further operation of the door.

The Commission requests comments on whether the codification in the proposed rule accurately reflects the changes to the entrapment protection provisions of UL 325.

D. Incorporation by Reference

The proposed rule would update the existing incorporations by reference in the mandatory rule to the most recent version of the appropriate voluntary standard, as follows:

- NFPA 70 (The standard addresses the installation of electrical conductors, equipment, and raceways; signaling and communications conductors, equipment, and raceways; and optical fiber cables and raceways in commercial, residential, and industrial occupancies.) (§ 1211.2(c));
- UL 991 (The requirements apply to controls that employ solid-state devices and are intended for specified safety-related protective functions.) (§§ 1211.4(c) and 1211.5(c));
- UL 1998 (These requirements apply to non-networked embedded microprocessor software whose failure is capable of resulting in a risk of fire, electric shock, or injury to persons.) (§ 1211.8(d)); and
- UL 746C (These requirements cover parts made of polymeric materials that are used in electrical equipment and describe the various test procedures and their use in the testing of such parts and equipment.) (§§ 1211.10(d) and (e), and 1211.12(c)(2)).

In addition, § 1211.6(c) of the proposed rule would add a new incorporation by reference for ANSI/DASMA 102–2004.

The Office of the Federal Register (''OFR'') has regulations concerning incorporation by reference. 1 CFR part 51. The OFR recently revised these regulations to require that, for a proposed rule, agencies must discuss in the preamble to the NPR, the ways that the materials the agency proposes to incorporate by reference are reasonably available to interested persons or how the agency worked to make the materials reasonably available. In addition, the preamble to the proposed rule must summarize the material. 1 CFR 51.5(a).

In accordance with the OFR's requirements, this section and section C of this preamble summarize the provisions of the voluntary standards that the Commission proposes to incorporate by reference and to update:

- Specifications for Sectional Doors, ANSI/DASMA 102–2004. ANSI/DASMA 102–2004 is copyrighted. Copies may be obtained from the Door and Access Systems Manufacturers' Association, International, 1300 Sumner Avenue, Cleveland, OH 44115–2851, telephone (216) 241–7333, or online at: *http://www.dasma.com/pdf/publications/standards/102-2004.pdf.*
- National Electrical Code, NFPA 70, 2014 edition. NFPA 70 is copyrighted. Copies may be obtained from the National Fire Protection Association, 1 Batterymarch Park, Quincy, MA 02269–9101 (800) 344–3555.
- Standard for Safety for Tests for Safety-Related Controls Employing Solid-State Devices, UL 991, Third Edition, dated October 22, 2004.
- Standard for Safety for Software in Programmable Components, UL 1998, Third Edition, dated December 18, 2013.
- Standard for Safety for Polymeric Materials—Use in Electrical Equipment Evaluations, UL 746C, Sixth Edition, dated September 10, 2004.

The UL standards listed above are copyrighted. For the UL standards, may be obtained online at: *http://ulstandards.ul.com/.* One may also inspect a copy of all of the above-referenced standards at CPSC's Office of the Secretary, U.S. Consumer Product Safety Commission, Room 820, 4330 East West Highway, Bethesda, MD 20814, Telephone: (301) 504–7923.

E. Effective Date

The requirements for residential GDOs in UL 325, Sixth Edition are currently in effect. Based on reports from industry representatives, all known manufacturers and importers currently conform to the provisions. Therefore, the Commission is proposing that the effective date of the rule, if finalized, would be 30 days from the date of publication of the final rule in the **Federal Register**. This effective date would not adversely affect the cost or availability of conforming GDOs.

F. Regulatory Flexibility Act

The Regulatory Flexibility Act (''RFA'') generally requires that agencies review proposed and final rules for the rules' potential economic impact on small entities, including small businesses, and prepare regulatory flexibility analyses. 5 U.S.C. 603 and 604. Because the existing level of conformance with the revisions to UL 325, Sixth Edition, is unanimous, and no new compliance costs or other burdens would be associated with the proposed amendment, the Commission certifies under the RFA that the rule would not likely have a significant impact on a substantial number of small businesses or other small entities. Under section 605(b) of the RFA, 5 U.S.C. 605(b), the Commission certifies that this proposed rule would not have a significant impact on a substantial number of small entities.

G. Environmental Considerations

The Commission's regulations provide a categorical exclusion for Commission rules from any requirement to prepare an environmental assessment or an environmental impact statement because the rules ''have little or no potential for affecting the human environment.'' 16 CFR 1021.5(c)(2). This proposed rule falls within the categorical exclusion, so no environmental assessment or environmental impact statement is required. The Commission's regulations state that safety standards for products normally have little or no potential for affecting the human environment. 16 CFR 1021.5(c)(1). Nothing in this proposed rule alters that expectation.

H. Preemption

The Improvement Act contains a preemption provision that states: ''those provisions of laws of States or political subdivisions which relate to the labeling of automatic residential garage door openers and those provisions which do not provide at least the equivalent degree of protection from the risk of injury associated with automatic residential garage door openers as the consumer product safety rule'' are subject to preemption under 15 U.S.C. 2075. Public Law 101–608, section 203(f).

List of Subjects in 16 CFR Part 1211

Consumer protection, Imports, Incorporation by reference, Labeling, Reporting and recordkeeping requirements.

For the reasons set forth in the preamble, the Commission proposes to amend subpart A of 16 CFR part 1211, as follows:

PART 1211—SAFETY STANDARDS FOR AUTOMATIC RESIDENTIAL GARAGE DOOR OPERATORS

■ 1. The authority citation for part 1211 continues to read as follows:

Authority: Sec. 203 of Pub. L. 101–608, 104 Stat. 3110; 15 U.S.C. 2063 and 2065.

■ 2. Amend § 1211.2 by revising paragraph (c) to read as follows:

§ 1211.2 Definition.

* * * * *

(c) Is intended to be employed in ordinary locations in accordance with the National Electrical Code, NFPA 70, 2014 edition. This incorporation by reference was approved by the Director of the Federal Register in accordance with 5 U.S.C. 552(a) and 1 CFR part 51.

Copies may be obtained from the National Fire Protection Association, 1 Batterymarch Park, Quincy, MA 02269–9101, Telephone: (800) 344–3555. Copies may be inspected at the Consumer Product Safety Commission, Office of the Secretary, 4330 East West Highway, Bethesda, MD 20814 or at the National Archives and Records Administration (NARA. For information on the availability of this material at NARA, call (202) 741–6030, or go to: *http://www.archives.gov/federal_register/code_of_federal_regulations/ibr_locations.html.*

■ 3. Amend § 1211.4 by revising paragraph (c) to read as follows:

§ 1211.4 General requirements for protection against risk of injury.

* * * * *

(c) An electronic or solid-state circuit that performs a back-up, limiting, or other function intended to reduce the risk of fire, electric shock, or injury to persons, including entrapment protection circuits, shall comply with the requirements in the Standard for Safety for Tests for Safety-Related Controls Employing Solid-State Devices, UL 991, Third Edition, dated October 22, 2004, including environmental and stress tests appropriate to the intended usage of the end-product. This incorporation by reference was approved by the Director of the Federal Register in accordance with 5 U.S.C. 552(a) and 1 CFR part 51. Copies may be obtained online at *http://ulstandards.ul.com/.* Copies may be inspected at the Consumer Product Safety Commission, Office of the Secretary, 4330 East West Highway, Bethesda, MD 20814 or at the National Archives and Records Administration (NARA). For information on the availability of this material at NARA, call 202–741–6030, or go to: *http://www.archives.gov/federal_register/code_of_federal_regulations/ibr_locations.html.*

■ 4. Amend § 1112.5 by revising paragraphs (a)(1) and (6) and (b)(3) to read as follows:

§ 1211.5 General testing parameters.

(a) * * *

(1) With regard to electrical supervision of critical components, an operator being inoperative with respect to closing movement of the door meets the criteria for trouble indication.

* * * * *

(6) When a Computational Investigation is conducted, λ_p shall not be greater than 6 failures/10^6 hours for the entire system. For external secondary entrapment protection devices or systems that are sold separately, λ_p shall not be greater than 0 failures/10^6 hours. For internal secondary entrapment protection devices or systems whether or not they are sold separately, λ_p shall not be greater than 0 failures/10^6 hours. The operational test is conducted for 14 days. An external secondary entrapment protection device or system that is sold separately, and that has a λ_p greater than 0 failures/10^6 hours meets the intent of the requirement when for the combination of the operator and the specified external secondary entrapment protection device λ_p does not exceed 6 failures/10^6 hours. See § 1211.18(j) through (l).

* * * * *

(b) * * *

(3) During the Power Cycling Safety for Tests in accordance with the Standard for Safety for Tests for Safety-Related Controls Employing Solid-State Devices, UL 991, Third Edition, dated October 22, 2004. This incorporation by reference was approved by the Director of the Federal Register in accordance with 5 U.S.C. 552(a) and 1 CFR part 51. Copies may be obtained online at *http://ulstandards.ul.com/.* Copies may be inspected at the Consumer Product Safety Commission, Office of the Secretary, 4330 East West Highway, Bethesda, MD 20814 or at the National Archives and Records Administration (NARA). For information on the availability of this material at NARA, call 202–741–6030, or go to: *http://www.archives.gov/federal_register/code_of_federal_regulations/ibr_locations.html.*

■ 5. Revise § 1211.6 to read as follows:

§ 1211.6 General entrapment protection requirements.

(a) A residential garage door operator system shall be provided with inherent primary entrapment protection that complies with the requirements as specified in § 1211.7.

(b) In addition to the inherent primary entrapment protection as required by paragraph (a) of this section, a vertically moving residential garage door operator shall comply with one of the following:

(1) Shall be constructed to:

(i) Require constant pressure on a control intended to be installed and activated within line of sight of the door to lower the door;

(ii) Reverse direction and open the door to the upmost position when constant pressure on a control is removed prior to operator reaching its lower limit, and

(iii) Limit a portable transmitter, when supplied, to function only to cause the operator to open the door;

(2) Shall be provided with a means for connection of an external secondary entrapment protection device as described in §§ 1211.8, 1211.10, and 1211.11; or

(3)(i) Shall be provided with an inherent secondary entrapment protection device as described in §§ 1211.8(a), 1211.8(c), 1211.8(f), 1211.10, and 1211.12 and is:

(A) A combination sectional overhead garage door operator system as described in § 1211.6(c); and

(B) For use only with vertically moving garage doors.

(ii) With respect to § 1211.6(b)(3)(i)(A), trolley-driven operators do not meet the definition of a combination sectional overhead garage door operator system.

(c) In the case of a vertically moving combination sectional overhead garage door operator system, the door shall comply with the requirements in Specifications for Sectional Doors, ANSI/DASMA 102, 2004 revision, dated October 22, 2004. This incorporation by reference was approved by the Director of the Federal Register in accordance with 5 U.S.C. 552(a) and 1 CFR part 51. Copies may be obtained from the Door and Access Systems Manufacturers' Association, International, 1300 Sumner Avenue, Cleveland, OH 44115–2851, telephone (216) 241–7333, or online at *http://www.dasma.com/pdf/publications/standards/102-2004.pdf.* Copies may be inspected at the Consumer Product Safety Commission, Office of the Secretary, 4330 East West Highway, Bethesda, MD 20814 or at the National Archives and Records Administration (NARA). For information on the availability of this material at NARA, call 202–741–6030, or go to: *http://www.archives.gov/federal_register/code_of_federal_regulations/ibr_locations.html.*

(d) In addition to the inherent primary entrapment protection as required by § 1211.6(a), a horizontally sliding residential garage door operator shall comply with one of the following:

(1) Shall be constructed to:

(i) Require constant pressure on a control to close the door;

(ii) Reverse direction and open the door a minimum of 2 in (50.8 mm) when constant pressure on a control is removed prior to operator reaching its position limit; and

(iii) Stop the door if a second obstruction is detected in the reverse direction.

(2) Shall be provided with a means for connection of an external secondary entrapment protection device for each leading edge as described in § 1211.8.

(e) A mechanical switch or a relay used in an entrapment protection circuit of an operator shall withstand 100,000 cycles of operation controlling a load no less severe (voltage, current, power factor, inrush and similar ratings) than it controls in the operator, and shall function normally upon completion of the test.

(f) In addition to complying with paragraph (e) of this section, in the event of a malfunction of a switch or relay (open or short) described in paragraph (c) of this section results in loss of any entrapment protection required by §§ 1211.7(a), 1211.7(b)(7), 1211.7(c)(7), 1211.8(a), or 1211.8(b), the door operator shall become inoperative at the end of the opening or closing operation, the door operator shall move the door to, and stay within, 1 foot (305 mm) of the uppermost position.

■ 6. Revise § 1211.7 to read as follows:

§ 1211.7 Inherent primary entrapment protection requirements.

(a) *General requirements.* A vertically moving residential garage door operator system shall be supplied with inherent primary entrapment protection that complies with the requirements as specified in paragraph (b) of this section. A horizontally sliding residential garage door operator system shall be supplied with inherent primary entrapment protection that complies with the requirements as specified in paragraph (c) of this section.

(b) *Inherent primary entrapment protection, vertically moving doors.* (1)(i) For a vertically moving residential garage door operator system, other than for the first 1 foot (305mm) of door travel from the full upmost position both with and without any secondary external entrapment protection device functional, the operator of a downward moving residential garage door shall initiate reversal of the door within 2 seconds of contact with the obstruction as specified in subparagraph (b)(3) of this section. After reversing the door, the operator shall return the door to, and stop at, the full upmost position. Compliance shall be determined in accordance with paragraphs (b)(3) through (10) of this section.

(ii) The door operator is not required to return the door to, and stop the door at, the full upmost position when the operator senses a second obstruction during the upward travel.

(iii) The door operator is not required to return the door to, and stop the door at, the full upmost position when a control is actuated to stop the door during the upward travel—but the door can not be moved downward until the operator reverses the door a minimum of 2 inches (50.8 mm).

(2) The test shall be performed on a representative operating system installed in accordance with the manufacturer's installation instructions with the operator exerting a 25-lbf (111.21-N) pull or its rated pull, whichever is greater.

(3)(i) A solid object is to be placed on the floor of the test installation and at various heights under the edge of the door and located in line with the driving point of the operator. When tested on the floor, the object shall be 1 inch (25.4 mm) high. In the test installation, the bottom edge of the door under the driving force of the operator is to be against the floor when the door is fully closed.

(ii) For operators other than those attached to the door, a solid object is not required to be located in line with the driving point of the operator. The solid object is to be located at points at the center, and within 1 foot of each end of the door.

(iii) To test operators for compliance with requirements in paragraphs (b)(1)(iii), (b)(7)(iii), and (b)(8)(iii) of this section and § 1211.13(c), a solid rectangular object measuring 4 inches (102 mm) high by 6 inches (152 mm) wide by a minimum of 6 inches (152 mm) long is to be placed on the floor of the test installation to provide a 4-inch (102 mm) high obstruction when operated from a partially open position.

(4) An operator is to be tested for compliance with paragraph (b)(1) of this section for 50 open-and-close cycles of operation while the operator is connected to the type of residential garage door with which it is intended to be used or with the doors specified in paragraph (b)(6) of this section. For an operator having a force adjustment on the operator, the force is to be adjusted to the maximum setting or at the setting that represents the most severe operating condition. Any accessories having an effect on the intended operation of entrapment protection functions that are intended for use with the operator, are to be attached and the test is to be repeated for one additional cycle.

(5) For an operator that is to be adjusted (limit and force) according to instructions supplied with the operator, the operator is to be tested for 10 additional obstruction cycles using the solid object described in paragraph (b)(3) of this section at the maximum setting or at the setting that represents the most severe operating condition.

(6) For an operator that is intended to be used with more than one type of door, one sample of the operator is to be tested on a sectional door with a curved track and one sample is to be tested on a one-piece door with jamb hardware and no track. For an operator that is not intended for use on either or both types of doors, a one-piece door with track hardware or a one-piece door with pivot hardware shall be used for the tests. For an operator that is intended for use with a specifically dedicated door or doors, a representative door or doors shall be used for the tests. See the marking requirements at § 1211.18.

(7)(i) An operator, employing an inherent entrapment protection system that measures or monitors the actual position of the door, shall initiate reversal of the door and shall return the door to, and stop the door at, the full upmost position in the event the inherent door operating ''profile'' of the door differs from the originally set parameters. The entrapment protection system shall measure or monitor the position of the door at increments not greater than 1 inch (25.4 mm).

(ii) The door operator is not required to return the door to, and stop the door at, the full upmost position when an inherent entrapment circuit senses an obstruction during the upward travel.

(iii) The door operator is not required to return the door to, and stop the door at, the full upmost position when a control is actuated to stop the door during the upward travel—but the door can not be moved downward until the operator reverses the door a minimum of 2 inches (50.8 mm).

(8)(i) An operator, using an inherent entrapment protection system that does not measure or monitor the actual position of the door, shall initiate reversal of the door and shall return the door, to and stop the door at the full upmost position, when the lower limiting device is not actuated in 30 seconds or less following the initiation of the close cycle.

(ii) The door operator is not required to return the door to, and stop the door at, the full upmost position when an inherent entrapment circuit senses an obstruction during the upward travel. When the door is stopped manually during its descent, the 30 seconds shall be measured from the resumption of the close cycle.

(iii) The door operator is not required to return the door to, and stop the door at, the full upmost position when a control is actuated to stop the door during the upward travel—but the door can not be moved downward until the operator reverses the door a minimum of 2 inches (50.8 mm). When the door is stopped manually during its descent, the 30 seconds shall be measured from the resumption of the close cycle.

(9) To determine compliance with paragraph (b)(7) or (8) of this section, an operator is to be subjected to 10 open-and-close cycles of operation while connected to the door or doors specified in paragraphs (b)(4) and (6) of this section. The cycles are not required to be consecutive. Motor cooling-off periods during the test meet the intent of the requirement. The means supplied to comply with the requirement in paragraph (b)(1) of this section and § 1211.8(a) or (b) are to be defeated during the test. An obstructing object is to be used so that the door is not capable of activating a lower limiting device.

(10) During the closing cycle referred to in paragraph (b)(9) of this section, the system providing compliance with paragraphs (b)(1) and (7) of this section or paragraphs (b)(1) and (8) of this section shall function regardless of a short- or open-circuit anywhere in any low-voltage external wiring, any external entrapment devices, or any other external component.

(c) *Inherent primary entrapment protection, horizontally sliding doors.* (1)(i) For a horizontally sliding residential garage door operator system, other than for the first 1 foot (305mm) of door travel from the full closed position both with and without any external entrapment protection device functional, the operator of a closing residential garage door shall initiate reversal of the door within 2 seconds of contact with the obstruction as specified in paragraph (c)(3) of this section. After reversing the door, the operator shall open the door a minimum of 2 inches (50.8 mm) from the edge of the obstruction. Compliance shall be determined in accordance with paragraphs (c)(2) through (10) of this section.

(ii) The door operator is not required to open the door a minimum 2 inches (50.8 mm) when the operator senses a second obstruction during the closing direction of travel.

(iii) The door operator is not required to open the door a minimum 2 inches (50.8 mm) when a control is actuated to stop the door during movement towards the open position—but the door can not be moved towards the open position until the operator reverses the door a minimum of 2 inches (50.8 mm).

(2) The test shall be performed on a representative operating system installed in accordance with the manufacturer's installation instructions with the operator exerting a 25-lbf (111.21-N) pull or its rated pull, whichever is greater.

(3)(i) A solid object is to be placed on the floor of the test installation and rigidly supported within the bottom track and then repeated with the solid object placed on the floor and rigidly supported external to the track. The test shall then be repeated with the solid object rigidly supported at heights of 1 ft (305 mm), 3 ft (914 mm), 5 ft (1524 mm), and within 1 ft (305 mm) of the top edge. The object shall be 1 inch (25.4 mm) in width.

(ii) For operators other than those attached to the door, a solid object is not required to be located in line with the driving point of the operator. The solid object is to be located at points at the center and within 1 ft of each end of the door opening.

(iii) To test operators for compliance with paragraphs (c)(1)(iii), (c)(7)(iii), and (c)(8)(iii) of this section, and § 1211.13(c), a solid rectangular object measuring 4 inches (102 mm) high by 6 inches (152 mm) wide by a minimum of 6 in (152 mm) long is to be placed on the floor of the test installation to provide a 4 in (102 mm) high obstruction when operated from a partially open position with the test repeated with the bottom edge of the obstruction rigidly supported at heights of 1 ft (305 mm), 3ft (914 mm), 5ft (1524 mm), and within 1 ft (305 mm) of the top edge.

(4) An operator is to be tested for compliance with paragraph (c)(1) of this section for 50 open-and-close cycles of operation while the operator is connected to the type of residential garage door with which it is intended to be used or with the doors specified in paragraph (c)(6) of this section. For an operator having a force adjustment on the operator, the force is to be adjusted to the maximum setting or at the setting that represents the most severe operating condition. Any accessories having an effect on the intended operation of entrapment protection functions that are intended for use with the operator, are to be attached and the test is to be repeated for one additional cycle.

(5) For an operator that is to be adjusted (limit and force) according to instructions supplied with the operator, the operator is to be tested for 10 additional obstruction cycles using the solid object described in paragraph (c)(3) of this section at the maximum setting or at the setting that represents the most severe operating condition.

(6) For an operator that is intended to be used with more than one type of door, one sample of the operator is to be tested on a sectional door with a curved track and one sample is to be tested on a one-piece door with jamb hardware and no track. For an operator that is not intended for use on either or both of these types of doors, a one-piece door with track hardware or a one-piece door with pivot hardware shall be used for the tests. For an operator that is intended for use with a specifically dedicated door or doors, a representative door or doors shall be used for the tests. See the marking requirements in § 1211.18.

(7)(i) An operator, employing an inherent entrapment protection control that measures or monitors the actual position of the door, shall initiate reversal of the door and shall return the door to, and stop the door at, the fully closed position in the event the inherent door operation ''profile'' of the door differs from the originally set parameters. The system shall measure or monitor the position of the door at increments not greater than 1 inch (25.4 mm).

(ii) The door operator is not required to open the door a minimum 2 inches (50.8 mm) when an inherent entrapment circuit senses an obstruction during the reversing travel.

(iii) The door operator is not required to open the door a minimum 2 inches (50.8 mm) when a control is actuated to stop the door during the opening direction—but the door can not be moved in the closing direction until the operator reverses the door a minimum of 2 inches (50.8 mm).

(8)(i) An operator, using an inherent entrapment protection system that does not measure or monitor the actual position of the door, shall initiate reversal of the door and shall open the door a minimum 2 inches (50.8 mm) when the closed position limit device is not actuated within 30 seconds or less following the initiation of the close cycle.

(ii) The door operator is not required to open the door a minimum 2 inches (50.8 mm) when an inherent entrapment circuit senses an obstruction during the reversing travel.

(iii) The door operator is not required to open the door a minimum 2 inches (50.8 mm) when a control is actuated to stop the door during the opening direction—but the door can not be moved in the closing direction until the operator has reversed the door a minimum of 2 inches (50.8 mm). When the door is stopped manually during its closing, the 30 seconds shall be measured from the resumption of the close cycle.

(9) To determine compliance with paragraph (c)(7) or (8) of this section, an operator is to be subjected to 10 open-and-close cycles of operation while connected to the door or doors specified in paragraphs (c)(4) and (6) of this section. The cycles are not required to

be consecutive. Motor cooling-off periods during the test meet the intent of the requirement. The means supplied to comply with paragraph (c)(1) of this section and § 1211.8(b) are to be inoperative or defeated during the test. An obstructing object is to be used so that the door is not capable of activating a position limiting device.

(10) During the closing cycle referred to in paragraph (c)(9) of this section, the system providing compliance with paragraphs (c)(1) and (7) of this section or paragraphs (c)(1) and (8) of this section shall function regardless of a short- or open-circuit anywhere in any low-voltage external wiring, any external entrapment devices, or any other external component.

■ 7. Revise § 1211.8 to read as follows:

§ 1211.8 Secondary entrapment protection requirements.

(a)(1) For a vertically moving door operator, a secondary entrapment protection device supplied with, or as an accessory to, an operator shall consist of:

(i) An external photoelectric sensor that when activated results in an operator that is closing a door to reverse direction of the door, returns the door to, and stops the door at the fully open position, and the sensor prevents an operator from closing an open door,

(ii) An external edge sensor installed on the edge of the door that, when activated results in an operator that is closing a door to reverse direction of the door, returns the door to, and stops the door at the fully open position, and the sensor prevents an operator from closing an open door,

(iii) An inherent door sensor independent of the system used to comply with § 1211.7 that, when activated, results in an operator that is closing a door to reverse direction of the door and the sensor prevents an operator from closing an open door, or

(iv) Any other external or internal device that provides entrapment protection equivalent to paragraph (a)(1)(i), (ii), or (iii) of this section.

(2) The door operator is not required to return the door to, and stop the door at, the fully open position when an inherent entrapment circuit senses an obstruction during the opening travel.

(3) The door operator is not required to return the door to, and stop the door at, the fully open position when a control is actuated to stop the door during the opening travel—but the door cannot be moved towards the closing direction until the operator has reversed the door a minimum of 2 inches (50.8 mm).

(b) For horizontal sliding garage door operators, a secondary entrapment protection device supplied with, or as an accessory to, an operator shall consist of:

(1) An external photoelectric sensor that, when activated, results in an operator that is closing or opening a door to reverse direction of the door for a minimum of 2 inches (50.8 mm); or

(2) An external edge sensor installed on the edge of the door that, when activated, results in an operator that is closing or opening a door to reverse direction of the door for a minimum of 2 inches (50.8 mm).

(c) With respect to paragraphs (a) and (b) of this section, the operator shall monitor for the presence and correct operation of the device at least once during each close cycle. Should the device not be present or a fault condition occurs which precludes the sensing of an obstruction, including an interruption of the wireless signal to the wireless device or an open or short circuit in the wiring that connects an external entrapment protection device to the operator and device's supply source, the operator shall be constructed such that:

(1) For a vertically moving door, the closing door shall open and an open door shall not close more than 1 foot (305 mm) below the upmost position;

(2) For a horizontally sliding door, the door shall not move in the opening or closing direction; or

(3) The operator shall function as required by § 1211.6(b)(1).

(d) An external entrapment protection device or system, when employing a wireless control, shall comply with paragraph (e) of this section when installed at its farthest distance from the operator as recommended in the installation instructions.

(e) An external entrapment protection device shall comply with the applicable requirements in §§ 1211.10, 1211.11 and 1211.12.

(f) An inherent secondary entrapment protection device shall comply with the applicable requirements in § 1211.13. Software used in an inherent entrapment protection device shall comply with the Standard for Safety for Software in Programmable Components, UL 1998, Third Edition, December 18, 2013. This incorporation by reference was approved by the Director of the Federal Register in accordance with 5 U.S.C. 552(a) and 1 CFR part 51. Copies may be obtained online at *http://ulstandards.ul.com/.* Copies may be inspected at the Consumer Product Safety Commission, Office of the Secretary, 4330 East West Highway, Bethesda, MD 20814 or at the National Archives and Records Administration (NARA). For information on the availability of this material at NARA, call 202–741–6030, or go to: *http://www.archives.gov/federal_register/code_of_federal_regulations/ibr_locations.html.*

■ 8. Amend § 1211.9 by:

■ a. Revising paragraph (a);

■ b. Revising paragraph (b)(2); and

■ c. Revising paragraph (c).

The revisions read as follows:

§ 1211.9 Additional entrapment protection requirements.

(a) A means to manually detach the door operator from the door shall be supplied. The gripping surface (handle) shall be colored red and shall be easily distinguishable from the rest of the operator. It shall be capable of being adjusted to a height of 6 feet (1.8 m) above the garage floor when the operator is installed according to the instructions specified in § 1211.16(a)(2). The means shall be constructed so that a hand firmly gripping it and applying a maximum of 50 pounds (223 N) of force shall detach the operator with the door obstructed in the down position. The obstructing object, as described in § 1211.7(b)(3)(i), is to be located in several different positions. A marking with instructions for detaching the operator shall be provided as required by § 1211.17(a), (b), and (j), as applicable.

(b) * * *

(2) The door is capable of being moved to the 2-inch (50.8-mm) point from any position between closed and the 2-inch (50.8-mm) point.

(c) Actuation of a control that initiates movement of a door shall stop and may reverse the door on the closing cycle. On the opening cycle, actuation of a control shall stop the door but not reverse it.

* * * * *

■ 9. Revise § 1121.10 to read as follows:

§ 1211.10 Requirements for all entrapment protection devices.

(a) *General requirements.* (1) An external entrapment protection device shall perform its intended function when tested in accordance with paragraphs (a)(2) through (4) of this section.

(2) The device is to be installed in the intended manner and its terminals connected to circuits of the door operator as indicated by the installation instructions.

(3) The device is to be installed and tested at minimum and maximum heights and widths representative of recommended ranges specified in the installation instructions. For doors, if

not specified, devices are to be tested on a minimum 7 foot (2.1 m) wide door and maximum 20 foot (6.1 m) wide door.

(4) If powered by a separate source of power, the power-input supply terminals are to be connected to supply circuits of rated voltage and frequency.

(5) An external entrapment protection device requiring alignment, such as a photoelectric sensor, shall be provided with a means, such as a visual indicator, to show proper alignment and operation of the device.

(b) *Current protection test.* (1) There shall be no damage to the entrapment protection circuitry if low voltage field-wiring terminals or leads are shortened or miswired to adjacent terminals.

(2) To determine compliance with paragraph (b)(1) of this section, an external entrapment protection device is to be connected to a door operator or other source of power in the intended manner, after which all connections to low voltage terminals or leads are to be reversed as pairs, reversed individually, or connected to any low voltage lead or adjacent terminal.

(3) After restoring the connections in the intended manner:

(i) A photoelectric sensor shall comply with the Normal Operation tests per § 1211.11(a) through (c); and

(ii) An edge sensor shall comply with the Normal Operation test, per § 1211.12(a).

(c) *Splash test.* (1) An external entrapment protection device intended to be installed inside a garage 3 feet or less above the floor shall withstand a water exposure as described in paragraph (c)(2) of this section without resulting in a risk of electric shock and shall function as intended, per paragraph (c)(3) of this section. After exposure, the external surface of the device may be dried before determining its functionality.

(2) External entrapment protection devices are to be indirectly sprayed using a hose having the free end fitted with a nozzle as illustrated in figure 2 of this subpart and connected to a water supply capable of maintaining a flow rate of 5 gallons (19 liters) per minute as measured at the outlet orifice of the nozzle. The water from the hose is to be played, from all sides and at any angle against the floor under the device in such a manner most likely to cause water to splash the enclosure of electric components. However, the nozzle is not to be brought closer than 10 feet (3.05 m) horizontally to the device. The water is to be sprayed for 1 minute.

(3) After drying the external surface of the device:

(i) A photoelectric sensor shall comply with the Normal Operation Tests per § 1211.11(a) through (c); and

(ii) An edge sensor shall comply with the Normal Operation Test, per § 1211.12(a).

(iii) There shall be no water on uninsulated live parts of a line voltage circuit.

(d) *Ultraviolet light exposure test.* A polymeric material used as a functional part of a device that is exposed to outdoor weather conditions shall comply with the Ultraviolet Light Exposure Test described in the Standard for Safety for Polymeric Materials—Use in Electrical Equipment Evaluations, UL 746C, Sixth Edition, dated September 10, 2004. This incorporation by reference was approved by the Director of the Federal Register in accordance with 5 U.S.C. 552(a) and 1 CFR part 51. Copies may be obtained online at *http://ulstandards.ul.com/.* Copies may be inspected at the Consumer Product Safety Commission, Office of the Secretary, 4330 East West Highway, Bethesda, MD 20814 or at the National Archives and Records Administration (NARA). For information on the availability of this material at NARA, call 202–741–6030, or go to: *http://www.archives.gov/federal_register/code_of_federal_regulations/ibr_locations.html.*

(e) *Resistance to impact test.* (1) An external entrapment protection device employing a polymeric or elastomeric material as a functional part shall be subjected to the impact test specified in paragraph (e)(2) of this section. As a result of the test:

(i) There shall be no cracking or breaking of the part; and

(ii) The part shall operate as intended, per paragraph (e)(4) of this section, or, if dislodged after the test, is capable of being restored to its original condition.

(2) Samples of the external entrapment protection device are to be subjected to the Resistance to Impact Test described in the Standard for Polymeric Materials—Use in Electrical Equipment Evaluations, UL 746C, Sixth Edition, dated September 10, 2004, as incorporated by reference in paragraph (d) of this section. The external entrapment protection device is to be subjected to 5 foot-pound (6.8 J) impacts. Three samples are to be tested, each sample being subjected to three impacts at different points.

(3) In lieu of conducting the room temperature test described in paragraph (e)(2) of this section, each of three samples of a device exposed to outdoor weather when the door is the closed position are to be cooled to a temperature of minus 31.0±3.6 °F (minus 35.0±2.0 °C) and maintained at this temperature for 3 hours. Three samples of a device employed inside the garage are to be cooled to a temperature of 32.0 °F (0.0 °C) and maintained at this temperature for 3 hours. While the sample is still cold, the samples are to be subjected to the impact test described in paragraph (e)(1) of this section.

(4) To determine compliance with paragraph (e)(1)(ii) of this section:

(i) A photoelectric sensor shall comply with the Normal Operation tests per § 1211.11(a) through (c); and

(ii) An edge sensor shall comply with the Normal Operation Test, per § 1211.12(a).

(f) *External entrapment protection devices with wireless control*—(1) *Initial test set-up.* (i) For a wireless device intended to be powered by a non-rechargeable battery, a fully charged battery shall be installed per the instructions or markings on the product. See § 1211.16 (a)(7).

(ii) An entrapment protection device or system employing a wireless control, or separately supplied for, shall be installed per the manufacturer's instructions.

(2) *Radiated immunity test.* (i) An external entrapment protection device when employing wireless control shall operate as specified in § 1211.8(a) through (e) as applicable; or is rendered inoperative (any case in which the operator will not complete a full cycle, open and close, of travel) when tested in accordance with paragraph (f)(2)(ii) of this section.

(ii) Compliance to paragraph (f)(2)(i) of this section is verified by simulating an obstruction during the period of the electric field strength test of § 1211.4(c).

(g) *Battery test for wireless devices.* (1) An external entrapment protection device when employing a battery powered wireless control shall operate as specified in § 1211.8(a) through (e) as applicable; or is rendered inoperative (any case in which the operator will not complete a full cycle, open and close, of travel) when tested in accordance with paragraph (g)(2) of this section.

(2) Compliance with paragraph (g)(1) of this section shall be verified with battery charge at the following levels:

(i) Fully charged; and

(ii) Discharged per the manufacturer's recommendations to the wireless device's lowest operational voltage.

(3) An external entrapment protection device employing a battery powered wireless device operating under conditions with a fully discharged battery or when the battery is discharged sufficiently to cause the device or system to render the moving door inoperative, shall be considered a

single point fault for complying with §§ 1211.5(b) and 1211.8(c).

(h) *Ambient light test for wireless device with IR communication.* (1) An external entrapment protection device, when employing an IR communication shall operate as specified in § 1211.8(a) through (e) as applicable; or is rendered inoperative (any case in which the operator will not complete a full cycle, open and close, of travel) when subjected to ambient light impinging at an angle of 15 to 20 degrees from the axis of the beam when tested in accordance with paragraph (h)(2) of this section.

(2) An external entrapment protection device when employing an IR communication shall be set up at maximum range per paragraph (h)(1) of this section. The ambient light test described in § 1211.11(e)(2) shall be conducted with the light source impinging on each IR receiver, one at a time that is part of the wireless control system between the external entrapment protection device and the operator.

■ 10. Revise § 1211.11 to read as follows:

§ 1211.11 Requirements for photoelectric sensors.

(a) *Normal operation test.* When installed as described in § 1211.10(a)(1) through (4), a photoelectric sensor of a vertically moving door shall sense an obstruction as described in paragraph (c) of this section that is to be placed on the floor at three points over the width of the door opening, at distances of 1 foot (305 mm) from each end and the midpoint.

(b) When installed as described in § 1211.10(a)(1) through (4), a photoelectric sensor of a horizontally moving door shall be tested per paragraph (c) of this section that is to be placed on a level surface within the path of the moving door. The sensor is to be tested with the obstruction at a total of five different locations over the height of the door or gate opening. The locations shall include distances 1 in (25.4 mm) from each end, 1 ft (305 mm) from each end, and the midpoint.

(c) The obstruction noted in paragraphs (a) and (b) of this section shall consist of a white vertical surface 6 inches (152 mm) high by 12 inches (305 mm) long. The obstruction is to be centered in the opening perpendicular to the plane of the door when in the closed position. See figure 3 of this subpart.

(d) *Sensitivity test.* (1) When installed as described in § 1211.10(a)(1) through (4), a photoelectric sensor shall sense the presence of a moving object when tested according to paragraph (d)(2) of this section.

(2) The moving object is to consist of a 1⅞ inch (47.6 mm) diameter cylindrical rod, 34½ inches (876 mm) long, with the axis point being 34 inches (864 mm) from the end. The axis point is to be fixed at a point centered directly above the beam of the photoelectric sensor 36 inches (914 mm) above the floor. The photoelectric sensor is to be mounted at the highest position as recommended by the manufacturer. The rod is to be swung as a pendulum through the photoelectric sensor's beam from a position 45 degrees from the plane of the door when in the closed position. See figure 4 of this subpart.

(3) The test described in paragraph (d)(2) of this section is to be conducted at three points over the width of the door opening, at distances of 1 foot (305 mm) from each end and the midpoint.

(4) When the test fixture of figure 4 of this subpart, prior to conduct of the test, interferes with the photoelectric sensor detection zone, the tests per paragraphs (d)(1) through (4) of this section may be conducted instead per paragraph (f)(4) of this section.

(e) *Ambient light test.* (1) A photoelectric sensor shall operate as specified in § 1211.8(a) and (c) when subjected to ambient light impinging at an angle of 15 to 20 degrees from the axis of the beam when tested according to paragraph (e)(2) of this section and, if appropriate, paragraph (e)(3) of this section.

(2) To determine compliance with paragraph (e)(1) of this section, a 500 watt incandescent or equivalent minimum rated, 3600K or lower color rated flood lamp is to be energized from a 120-volt, 60-hertz source. The lamp is to be positioned 5 feet from the front of the receiver and aimed directly at the sensor at an angle of 15 to 20 degrees from the axis of the beam. See figure 5 of this subpart.

(3) If the photoelectric sensor uses a reflector, this test is to be repeated with the lamp aimed at the reflector.

(f) *Photoelectric sensor vertical arrays* (1) A vertical array shall be tested as required by paragraphs (a) through (e) of this section, except as noted in paragraphs (f)(2) through (5) of this section.

(2) The array shall comply with the Normal Operation tests specified in paragraphs (a) through (c) of this section, with the solid obstruction placed on the floor. In addition, the obstruction shall be placed at various locations over the height of the light curtain array in accordance with the light curtain coverage area per the manufacturer's instructions.

(3) In conducting the tests specified in paragraphs (a) through (c) of this section, when the product includes a blanking function whereby the light array is located directly in-line with the path of the door travel, and the door system is intended to detect any obstruction other than one in the ''next'' successive position that the door is programmed to travel, the obstruction is placed at any location other than the next successive door position expected by the system.

(4) The array shall comply with the Sensitivity Test specified in paragraph (d) of this section, except that the edge of the pendulum nearest to the array is to be located 2 in. (50.8 mm) from one side of the plane of the array, rather than directly above one photoelectric sensor pair. For vertical arrays, this test need only be conducted with the test pendulum at the vertical height indicated in paragraph (d)(2) of this section.

(5) When conducting the Ambient Light Test specified in paragraph (e) of this section, the position of the light source shall be aligned per paragraph (e)(2) of this section based on the axis of the lowest beam or detection zone. This arrangement shall be used to determine compliance with the requirements specified in paragraph (f)(2) of this section (with the obstruction at the floor/ground level) and paragraph (f)(4) of this section, which are the only conditions for which the ambient light is required to be applied.

■ 11. Amend § 1211.12 by revising paragraphs (a)(1), (c)(1) and (2), and (d) to read as follows:

§ 1211.12 Requirements for edge sensors.

(a) * * * (1) When installed on a representative residential door edge, an edge sensor shall actuate upon the application of a 15 pounds (66.7 N) or less force in the direction of the application. For an edge sensor intended to be used on a sectional door, the force is to be applied by the longitudinal edge of a 1⅞ inch (47.6 mm) diameter cylinder placed across the switch so that the axis is perpendicular to the plane of the door. For an edge sensor intended to be used on a one piece door, the force is to be applied so that the axis is at an angle 30 degrees from the direction perpendicular to the plane of the door. See figure 6 of this subpart.

* * * * *

(c) * * *

(1) An elastomeric material used as a functional part of an edge sensor shall function as intended when subjected to:

(i) Accelerated Aging Test of Gaskets, stated in paragraph (c)(3) of this section,

(ii) Compliance to the Standard for Gaskets and Seals, UL 157, fulfills this requirement; and

(iii) Puncture Resistance Test, stated in paragraph (d) of this section.

(2) An elastomeric material used for a functional part that is exposed to outdoor weather conditions when the door is in the closed position shall have physical properties as specified in the table to this subpart after being conditioned in accordance with the Ultraviolet Light Exposure Test described in the Standard for Safety for Polymeric Materials—Use in Electrical Equipment Evaluations, UL 746C, Sixth Edition, dated September 10, 2004. This incorporation by reference was approved by the Director of the Federal Register in accordance with 5 U.S.C. 552(a) and 1 CFR part 51. Copies may be obtained online at: *http://ulstandards.ul.com/.* Copies may be inspected at the Consumer Product Safety Commission, Office of the Secretary, 4330 East West Highway, Bethesda, MD 20814 or at the National Archives and Records Administration (NARA). For information on the availability of this material at NARA, call 202–741–6030, or go to: *http://www.archives.gov/federal_register/code_of_federal_regulations/ibr_locations.html.*

* * * * *

(d) *Puncture resistance test.* (1) After being subjected to the tests described in paragraph (d)(2) or (3) of this section, an elastomeric material that is a functional part of an edge sensor shall:

(i) Not be damaged in a manner that would adversely affect the intended operation of the edge sensor, and

(ii) Maintain enclosure integrity if it serves to reduce the likelihood of contamination of electrical contacts.

(2) For a vertically moving door, a sample of the edge sensor is to be installed in the intended manner on a representative door edge. The probe described in figure 7 of this subpart is to be applied with a 20 pound-force (89N) to any point on the sensor that is 3 inches (76 mm) or less above the floor is to be applied in the direction specified in the Edge Sensor Normal Operation Test, figure 6 of this subpart. The test is to be repeated on three locations on each surface of the sensor being tested.

(3) For horizontally sliding doors, sample of the edge sensor is to be installed in the intended manner on a representative door edge. The probe described in figure 7 of this subpart is to be applied with a 20 lbf (89 N) to any point on the sensor when the door is within 3 in (76 mm) of its fully open position and within 3 in (76 mm) of any stationary wall. For each type of door, the force is to be applied in the direction specified in the Edge Sensor Normal Operation Test, figure 6 of this subpart. The test is to be repeated on three locations on each surface of the sensor being tested.

■ 13. Revise § 1211.13 to read as follows:

1211.13 Inherent force activated secondary door sensors.

(a) *General.* (1) A force activated door sensor of a door system installed according to the installation instructions shall actuate in accordance with paragraphs (b) through (f) of this section, which are to be conducted in sequence on a single system sample, except for the separate test sequences of paragraph (a)(2) of this section.

(2) The system shall actuate with the maximum and minimum specifications of the door, operator, and hardware.

(3) Tests conducted per paragraphs (b) through (f) of this section shall be performed with the force exerted by a drive adjusted to its highest value if the force can be adjusted by the user during use or user maintenance.

(4) The test cylinder referred to in paragraph (b)(7) of this section shall be a 1–7/8 in (47.6 mm) diameter cylinder placed under the door so that the axis is perpendicular to the plane of the door. See figure 6 of this subpart.

(5) The measuring device referred to in paragraph (b)(1) of this section shall:

(i) Have an accuracy of ±1%;

(ii) Have a rise and fall time not exceeding 5 ms;

(iii) Have the equivalence of a spring constant of 2855 lb/in ±285 lb/in (500 N/mm, ±50 N/mm);

(iv) Be placed on a rigid, level surface; and

(v) Have a rigid plate with a diameter of 3.1 in (80 mm).

(vi) See paragraph (a)(6) of this section for test equipment alternatives for force measurements at 1 ft (305 mm) or greater for the tests conducted per paragraphs (b) and (d) of this section.

(6) With regard to the alternative test equipment referred to in paragraph (a)(5)(vi) of this section, the test device described in paragraph (b)(5) of this section for force measurements at 1 foot (305 mm) or greater shall be:

(i) A spring constant means such as specified in paragraph (a)(5) of this section;

(ii) A gravity based weight displacing means that suspends a weight off its supporting surface upon exceeding 15 lbf (67 N) such as the example shown in figures 8 through 10 of this subpart if the equipment described in paragraph (a)(5) of this section is applied before the tests specified in paragraph (c) of this section and after the tests specified in paragraph (d) of this section at the 1 ft (305 mm) height specified in paragraph (b)(6) of this section; or

(iii) The equivalent requirements of paragraphs (a)(6)(i) or (ii) of this section.

(7) The cycles specified in paragraph (d) of this section are not required to be consecutive. Continuous operation of the motor without cooling is not required.

(b) *Closing force test.* (1) The door shall stop and reverse within 2 seconds after contacting the obstruction. The door shall apply the following forces at the locations noted in paragraph (b)(2) of this section:

(i) 90 lbf (400 N) or less average during the first 0.75 seconds after 15 lbf (67 N) is exceeded from initial impact; and

(ii) 15 lbf (67 N) or less from 0.75 seconds after 15 lbf (67 N) is exceeded from initial impact until the door reverses.

(2) The test referred to in paragraph (b)(1) of this section shall be conducted at the following test height and locations along the edge of the door:

(i) The center point, at a height of 2 in (50.8) from the floor;

(ii) Within 1 ft (305 mm) of the end of the door, at a height of 2 in (50.8) from the floor; and

(iii) Within 1 ft (305 mm) of the other end of the door, at a height of 2 in (50.8) from the floor.

(3) The maximum force specified in paragraph (b)(1) of this section shall be tested by the door applying a force against the longitudinal edge of the test cylinder described in paragraph (a)(4) of this section.

(4) The equipment used to measure force for the test described in paragraph (b)(1) of this section shall be in accordance with the requirements of paragraph (a)(5) of this section.

(5) The door shall stop and reverse within 2 seconds after contacting the obstruction. The door shall apply a load of 15 lbf (67 N) or less in the closing direction along the path of door travel at the locations noted in paragraph (b)(6) of this section.

(6) The test described in paragraph (b)(5) of this section shall be conducted at the following points along the edge of the door:

(i) At the center at heights of 1 ft, 3 ft, and 5 ft (305 mm, 914 mm and 1.52 m) from the floor;

(ii) Within 1 ft (305 mm) of the end of the door, at heights of 1 ft, 3 ft, and 5 ft from the floor; and

(iii) Within 1 ft of the other end of the door at heights of 1 ft, 3 ft, and 5 ft from the floor.

(7) The maximum force described in paragraph (b)(5) of this section shall be tested by the door applying a force against the longitudinal edge of the test cylinder as described in paragraph (a)(4) of this section.

(8) The equipment used to measure forces for the test described in paragraph (b)(1) of this section shall be in accordance with the requirements of paragraph (a)(5) or (6) of this section.

(c) *Opening force test.* (1) The door shall stop within 2 seconds after a weight of 44 lb (20 kg) is applied to the door.

(2) The test described in paragraph (c)(1) of this section shall be conducted with the door starting from the fully closed position and at heights of approximately 1 ft, 3 ft, and 5 ft (305 mm, 914 mm and 1.52 m) from the floor.

(3) Test weight(s) shall be applied to sections of the door that are vertical in the initial stopped position for each test height prior to operator activation.

(d) *Fifty cycle test.* (1) With the door(s) at the test point(s) determined by the tests described in paragraphs (b) and (c) of this section to be most severe with respect to both reversal time and force, the door system shall function as intended after 50 cycles of operation. After the last cycle, the system shall complete one additional cycle of opening the door to its fully open condition and closing the door to its fully closed position.

(2) The tests described in paragraphs (b) and (c) of this section shall be repeated upon completion of cycling test.

(e) *Adjustment of door weight.* At the point determined by the test described in paragraph (b)(5) of this section to be the most severe, weight is to be added to the door in 5.0 pound (2.26 Kg) increments and the tests of paragraphs (b) and (c) of this section are to be repeated until a total of 15.0 pounds (66.72 N) has been added to the door. Before performing each test cycle, the door is to be cycled 2 times to update the profile. Similarly, starting from normal weight plus 15.0 pounds, the tests described in paragraphs (b) and (c) of this section are to be repeated by subtracting weight in 5.0 pound increments until a total of 15.0 pounds has been subtracted from the door.

(f) *Obstruction test.* For a door traveling in the downward direction, when an inherent secondary entrapment protection device senses an obstruction and initiates a reversal, any control activation shall not move the door downward until the operator reverses the door a minimum of 2 inches (50.8 mm). The test is to be performed as described in § 1211.7(b)(3)(iii). The system may be initially manually re-profiled for the purpose of this test.

§§ 1211.14 through 1211.17 [Redesignated as §§ 1211.16 through 1211.19]

■ 13. Redesignate §§ 1211.14 through 1211.17 as §§ 1211.16 through 1211.19 respectively.

■ 14. Add new § 1211.14 to read as follows:

§ 1211.14 Unattended operation requirements.

(a) *General requirements.* (1) A residential garage door operator or system may permit unattended operation to close a garage door, provided the operator system complies with the additional requirements of paragraphs (b) through (e) of this section.

(2) Unattended operation shall not be permitted on one-piece garage doors or swinging garage doors. An operator intended for use with both sectional doors and one-piece or swinging doors that have an unattended operation close feature shall identify that the unattended operation closing feature is only permitted to be enabled when installed with a sectional door by complying with:

(i) The installation instructions stated in § 1211.16(b)(1)(ii);

(ii) The markings specified in § 1211.17(h); and

(iii) The carton markings specified in § 1211.18(m) when the carton references the unattended operation close feature.

(b) *Operator system.* The operator system shall require one or more intentional actions to enable unattended operation, such as setting a power head switch or wall-control switch. For an accessory requiring installation and set-up in order to enable unattended operation, the installation and set-up may be considered satisfying this requirement.

(c) *Alarm signal.* (1) The operator system shall provide an audible and visual alarm signal.

(2) The alarm shall signal for a minimum of 5 seconds before any unattended closing door movement.

(3) The audible signal shall be heard within the confines of a garage. The audio alarm signals for the alarm specified in paragraph (c)(1) of this section shall be generated by devices such as bells, horns, sirens, or buzzers. The signal shall have a frequency in the range of 700 to 3400 Hz, either a cycle of the sound level pulsations of 4 to 5 per second or one continuous tone, a sound level at least 45 dB 10 ft (305 cm) in front of the device over the voltage range of operation.

(4) The visual alarm signal described in paragraph (c)(1) of this section shall be visible within the confines of a garage using a flashing light bulb of at least 40 watt incandescent or 360 lumens.

(d) *Controls.* (1) During the pre-motion signaling period defined in paragraph (c)(2) of this section, activation of any user door control (*e.g.,* wall control, wireless remote, keypad) shall prevent the pending unattended door movement. Door movement resulting from activation of a user door control is not prohibited.

(2) Upon activation of a user door control during unattended door movement, the door shall stop, and may reverse the door on the closing cycle. On the opening cycle, activation of a user door control shall stop the door but not reverse it.

(3) If an unattended door travelling in the closing direction is stopped and reversed by an entrapment protection device, the operator system shall be permitted one additional unattended operation attempt to close the door.

(4) After two attempts per paragraph (d)(3) of this section, the operator system shall suspend unattended operation. The operator system shall require a renewed, intended input, via user door control (*e.g.,* wall control wireless remote, keypad) other than the unattended activation device, prior to re-enabling unattended operation.

(e) *Entrapment protection.* For a moving door, entrapment protection shall comply with §§ 1211.7 and 1211.8.

■ 15. Add new § 1211.15 to read as follows:

§ 1211.15 Vertically moving combination rigid one-piece overhead residential garage door and operator system.

(a) A vertically moving combination rigid one-piece overhead residential garage door and operator system shall comply with the applicable residential garage door operator requirements in this standard and shall additionally comply with the following:

(1) The speed of the door edge during the opening or closing motion shall not exceed 6 in (152 mm) per second.

(2) The system shall be supplied with two additional independent secondary entrapment protection devices complying with Secondary Entrapment Protection, § 1211.8. When photoelectric sensors are used, a minimum of two sensors in addition to a third secondary device shall be supplied. The instructions shall state that one photoelectric sensor shall be positioned to comply with § 1211.11 and the

other(s) shall be positioned on the left and right sides of the door to detect solid objects that would be within the space where the door moves as it opens or closes.

(3) A means to manually detach both door operators from the door shall be provided. For systems where the mechanical drive is located on a wall adjacent to the door, the manual detachment means is not required to comply with § 1211.9(a). Instead, the manual detachment means shall be located 5 ft (1.52 m) above the floor, shall not require a torque of more than 5 ft-lb (6.78 N-m) to initiate disconnection when the door is obstructed, and shall be clearly marked with operating instructions adjacent to the mechanism. The gripping surface (handle) shall be colored red and shall be distinguishable from the rest of the operator. The marking which includes instructions for detaching the operator shall be provided in accordance with § 1211.17(a), (b), and (j) as applicable.

(4) A means (interlock) shall be supplied to de-energize the operator whenever the operator is manually detached from the door.

(5) A means (interlock) shall be supplied to de-energize the operator whenever an operable window or access (service) door that is mounted in the garage door is opened perpendicular to the surface of the garage door.

(6) The door shall not move outward from the exterior wall surface during the opening or closing cycle.

(7) The moving parts of the door or door system (mounting hardware, track assembly, and components that make up the door) shall be guarded.

(8) A horizontal track assembly, including installation hardware, shall support a dead load equal to the door weight when the door is in the horizontal position.

(9) Instructions for the installation of operable windows and access (service) doors and the interlocks specified in paragraph (a)(5) of this section shall be supplied with the operator.

(b) [Reserved]

■ 16. Revise newly designated § 1211.16 to read as follows:

§ 1211.16 Instruction manual.

(a) *General.* (1) A residential garage door operator shall be provided with an instruction manual. The instruction manual shall give complete instructions for the installation, operation, and user maintenance of the operator.

(2) Instructions that clearly detail installation and adjustment procedures required to effect proper operation of the safety means provided shall be provided with each door operator.

(3) A residential garage door or door operator shall be provided with complete and specific instructions for the correct adjustment of the control mechanism and the need for periodic checking and, if needed, adjustment of the control mechanism so as to maintain satisfactory operation of the door.

(4) The instruction manual shall include the important instructions specified in paragraphs (b)(1) and (2) of this section. All required text shall be legible and contrast with the background. Upper case letters of required text shall be no less than 5⁄64 inch (2.0 mm) high and lower case letters shall be no less than 1⁄16 inch (1.6 mm) high. Heading such as ''Important Installation Instructions,'' ''Important Safety Instructions,'' ''Save These Instructions'' and the words ''Warning—To reduce the risk of severe injury or death to persons:'' shall be in letters no less than 3⁄16 inch (4.8 mm) high.

(5) The instructions listed in paragraphs (b)(1) and (2) of this section shall be in the exact words specified or shall be in equally definitive terminology to those specified. No substitutes shall be used for the word ''Warning.'' The items may be numbered. The first and last items specified in paragraph (b)(2) of this section shall be first and last respectively. Other important and precautionary items considered appropriate by the manufacturer may be inserted.

(6) The instructions listed in paragraph (b)(1) of this section shall be located immediately prior to the installation instructions. The instructions listed in paragraph (b)(2) of this section shall be located immediately prior to user operation and maintenance instructions. In each case, the instructions shall be separate in format from other detailed instructions related to installation, operation and maintenance of the operator. All instructions, except installation instructions, shall be a permanent part of the manual(s).

(7) For an operator or system provided with an external entrapment protection device requiring a non-rechargeable battery, instructions shall be provided with the operator and/or the device for:

(i) The rating, size, number, and type of battery(s) to be used; and

(ii) The proper insertion, polarity, orientation, and replacement of the battery(s).

(8) For an operator or system provided with an external entrapment protection device or system utilizing wireless control, instructions shall be provided with the operator and/or the device for:

(i) The proper method of configuring and initializing the wireless communication link between device and operator;

(ii) The proper orientation, antenna positioning, and mounting location with regard to maintaining communication link between device and operator;

(iii) The maximum range at which the wireless device will operate; and

(iv) The proper location of the device where the transmission of the signals are not obstructed or impeded by building structures, natural landscaping or similar obstruction.

(9) When provided with a detachable supply cord, the operator instructions shall contain complete details concerning proper selection of the power supply cord replacement.

(10) The installation, operation, and maintenance instructions may be provided in electronic read-only media format only, such as CD–ROM, USB flash drive, or company Web site, if the following instructions are additionally provided with the operator in an instruction sheet, manual, booklet, or similar printed material:

(i) Residential garage doors and door operators, instructions of this section, as applicable.

(ii) [Reserved]

(11) The printed instruction material referenced in this section shall contain detailed instructions of how to obtain a printed copy of the material contained in electronic format.

(12) All printed instruction material referenced in this section shall also be provided in the electronic read-only media format.

(13) Instructions of a combination sectional overhead garage door operator system shall specify:

(i) The operator by manufacturer and model;

(ii) The door(s) by manufacturer(s), model(s), and maximum and minimum door width and height required for compliance to § 1211.6(a) and (c); and

(iii) Hardware required for compliance to § 1211.6(a) and (c).

(14) Installation and maintenance instructions of a combination sectional overhead garage door operator system shall indicate how to properly counter-balance the door.

(b) *Specific required instructions for residential garage door operators and systems.*

(1)(i) The Installation Instructions shall include the following instructions:

Important Installation Instructions

Warning—To reduce the risk of severe injury or death:

1. Read and follow all Installation Instructions.

2. Install only a properly balanced garage door. An improperly balanced door could cause severe injury. Have a qualified service person make repairs to cables, spring assemblies and other hardware before installing opener.

3. Remove all ropes and remove or make inoperative all locks connected to the garage door before installing opener.

4. Where possible, install door opener 7 feet or more above the floor. For products requiring an emergency release, mount the emergency release within reach, but at least 6 feet above the floor and avoiding contact with vehicles to avoid accidental release.

5. Do not connect opener to source of power until instructed to do so.

6. Locate control button: (a) within sight of door, (b) at a minimum height of 5 feet so small children cannot reach it, and (c) away from all moving parts of the door.

7. Install Entrapment Warning Label next to the control button in a prominent location. Install the Emergency Release Marking. Attach the marking on or next to the emergency release.

8. After installing opener, the door must reverse when it contacts a 1½ inch high object (or a 2 by 4 board laid flat) on the floor.

9. For horizontally sliding doors, Item 2 shall be replaced with ''Have a qualified service person make repairs and hardware adjustments before installing the opener.''

(ii) In accordance with § 1211.14(a)(2), the installation instructions in paragraph (b)(1) of this section for a residential garage door operator intended for use with both sectional and one-piece door that has an unattended operation close feature shall comply with paragraph (b)(1) of this section and include:

''WARNING: To reduce the risk of injury to persons—Only enable [+] feature when installed with a sectional door,'' where + is the unattended operation function.

(iii) Exception: For operators that automatically sense one piece door operation, the warning in paragraph (b)(1)(ii) of this section is not required.

(iv) For residential garage door operators that do not have permanent connection of the wiring system, the installation instructions shall include the following or equivalent text: ''This operator not equipped for permanent wiring. Contact licensed electrician to install a suitable receptacle if one is not available.''

(2) The User Instructions shall include the following instructions:

Important Safety Instructions

Warning—To reduce the risk of severe injury or death:

1. Read and follow all instructions.

2. Never let children operate, or play with door controls. Keep the remote control away from children.

3. Always keep the moving door in sight and away from people and objects until it is completely closed. No one should cross the path of the moving door.

4. NEVER GO UNDER A STOPPED PARTIALLY OPEN DOOR.

5. Test door opener monthly. The garage door MUST reverse on contact with a 1½ inch object (or a 2 by 4 board laid flat) on the floor. After adjusting either the force or the limit of travel, retest the door opener. Failure to adjust the opener properly may cause severe injury or death.

6. For products requiring an emergency release, if possible, use the emergency release only when the door is closed. Use caution when using this release with the door open. Weak or broken springs may allow the door to fall rapidly, causing injury or death.

7. Keep garage door properly balanced. See users's manual. An improperly balanced door could cause severe injury or death. Have a qualified service person make repairs to cables, spring assemblies and other hardware.

8. For operator systems equipped with an unattended operation feature, the following statement shall be included: ''This operator system is equipped with an unattended operation feature. The door could move unexpectedly. NO ONE SHOULD CROSS THE PATH OF THE MOVING DOOR.''

9. Save these Instructions.

10. For horizontally moving doors, Item 4 shall be replaced with ''NEVER GO THROUGH A STOPPED, PARTIALLY OPEN DOOR''.

11. For horizontally moving doors, Item 6 is not required.

12. For horizontally moving doors, Item 7 shall be replaced with ''Have a qualified service person make repairs and hardware adjustments before installing the opener.''

13. The installation instructions provided with a combination rigid one-piece overhead residential garage door and operator system shall specify the locations where attachments to the horizontal track shall be made for the purpose of supporting the track.

■ 17. Amend newly designated § 1211.17 by:

■ a. Adding paragraph (g)(2)(v);

■ b. Redesignating paragraphs (h) and (i) as paragraphs (i) and (j) respectively;

■ c. Adding new paragraph (h); and

■ d. Adding paragraphs (k) through (m).

The revisions and additions read as follows:

§ 1211.17 Field-installed labels.

* * * * *

(g) * * *

(2) * * *

(v) For products equipped with an unattended operation feature, the instructions shall include the following: ''This operator system is equipped with an unattended operation feature. The door could move unexpectedly.''

* * * * *

(h)(i) The instructions of a residential garage door operator intended for use with both sectional doors and either one-piece or swinging doors and are provided with an unattended operation feature shall comply with paragraph (g) of this section and include the following under the avoidance statements of paragraph (g)(2) of this section:

''Only enable [+] feature when installed with a sectional door.'', or equivalent, where + is the unattended operation closing function.

(ii) For operators that automatically sense one piece door operation, this warning is not required.

* * * * *

(k) Both the operator and the door that comprise a combination sectional overhead garage door operator system shall be provided with permanent labels. The labels shall contain the following statement or the equivalent: ''WARNING: THIS OPERATOR AND DOOR FUNCTION AS A SYSTEM. IF EITHER THE DOOR OR THE HARDWARE MUST BE REPLACED, THE REPLACEMENT DOOR OR HARDWARE MUST BE IDENTICAL TO THE ORIGINAL EQUIPMENT WITH RESPECT TO MANUFACTURER AND MODEL TO MAINTAIN THE SAFETY OF THE SYSTEM. SEE INSTRUCTION MANUAL.'' The marking shall be visible to the user after installation without the need to remove any covers.

(l) A label specified in paragraph (m) of this section when intended to be affixed during installation shall:

(1) Be provided with the operator or door assembly; and

(2) Have installation instructions of how and where to install the label so that it is visible to the user after installation.

(m) The operator of a combination sectional overhead garage door operator system shall be provided with a permanent marking that contains the following statement or the equivalent: ''NO USER SERVICEABLE PARTS INSIDE.''

■ 18. Amend newly designated § 1211.18 by:

■ a. Revising paragraphs (b)(3) and (c);
■ b. Redesignating paragraphs (f) through (k) as paragraphs (g) through (l);
■ c. Adding new paragraph (f);
■ d. Revise newly redesignated paragraphs (i), (j), and (k); and
■ d. Adding paragraphs (m) and (n).
■ The revisions and additions read as follows:

§ 1211.18 UL marking requirements.

* * * * *

(b)* * *

(3) The voltage, frequency, and input in amperes, VA, or watts. The ampere or VA rating shall be included unless the full-load power factor is 80 percent or more, or, for a cord-connected appliance, unless the rating is 50 W or less. The number of phases shall be indicated when an appliance is for use on a polyphase circuit; and

* * * * *

(c) The date code repetition cycle shall not be less than 20 years.

* * * * *

(f) Exception No 3: The input in amperes or watts may be shown as part of the motor nameplate, if the appliance employs a single motor, the nameplate is readily visible after the appliance has been installed.

* * * * *

(i) For products with user adjustments, a residential garage door operator shall be marked with the word ''WARNING'' and the following or equivalent, ''Risk of entrapment. After adjusting either the force or limits of travel adjustments, insure that the door reverses on a 1½ inch (or a 2 by 4 board laid flat) high obstruction on the floor.'' This marking shall be located where visible to the user when making the adjustments.

(j) For a separately supplied accessory, including external entrapment protection device, the instructions, packaging, or marking on the product shall indicate the accessory manufacturer's name and or model number and the type of appliance or appliances with which it is intended to be used—such as a residential garage door operator. Additionally, installation instructions, accompanying specifications sheet, or packaging of the accessory shall identify the appliance or appliances with which it is intended to be used by specifying the manufacturer's name and catalog or model number or by any other positive means to serve the identification purpose.

(k) An appliance provided with terminals or connectors for connection of a separately supplied accessory, such as an external entrapment protection device or system, shall be marked to identify the accessory intended to be connected to the terminals or connectors. The accessory identification shall be by manufacturer's name and catalog or model number or other means to allow for the identification of accessories intended for use with the appliance.

* * * * *

(m)(i) A residential garage door operator intended for use with both sectional and one-piece or swinging door that has an unattended operation close feature indicating the function in the carton markings shall include the following carton marking:

''WARNING: To reduce the risk of injury to persons—Only enable [+] feature when installed with sectional door,'' where + is the unattended operation closing function.

(ii) Exception: For operators that automatically sense one piece door operation, this warning is not required.

(n) A residential garage door operator is not required to be provided with permanent wiring systems when marked with the following or equivalent text: ''This operator not equipped for permanent wiring. Contact licensed electrician to install a suitable receptacle if one is not available.'' This marking is to be placed adjacent to the power cord entry.

■ 19. Amend newly designated § 1211.19 by revising paragraph (b) to read as follows:

§ 1211.19 Statutory labeling requirement.

* * * * *

(b) The display of the UL logo or listing mark, and compliance with the date marking requirements stated in § 1211.18 of this subpart, on both the container and the system, shall satisfy the requirements of this subpart.

Figures 1 Through 10 and Table to Subpart A of Part 1211—[Added]

■ 20. Add figures 1 through 10 to subpart A and the table to subpart A to the end of subpart A to part 1211, and add the headings to the table of contents under subpart A of part 1211 to read as follows:

BILLING CODE 6355–01–P

Figure 1 to Subpart A of Part 1211 –Critical Condition Flow Chart for Residential Garage Door Operator Entrapment Protection Devices and Functions

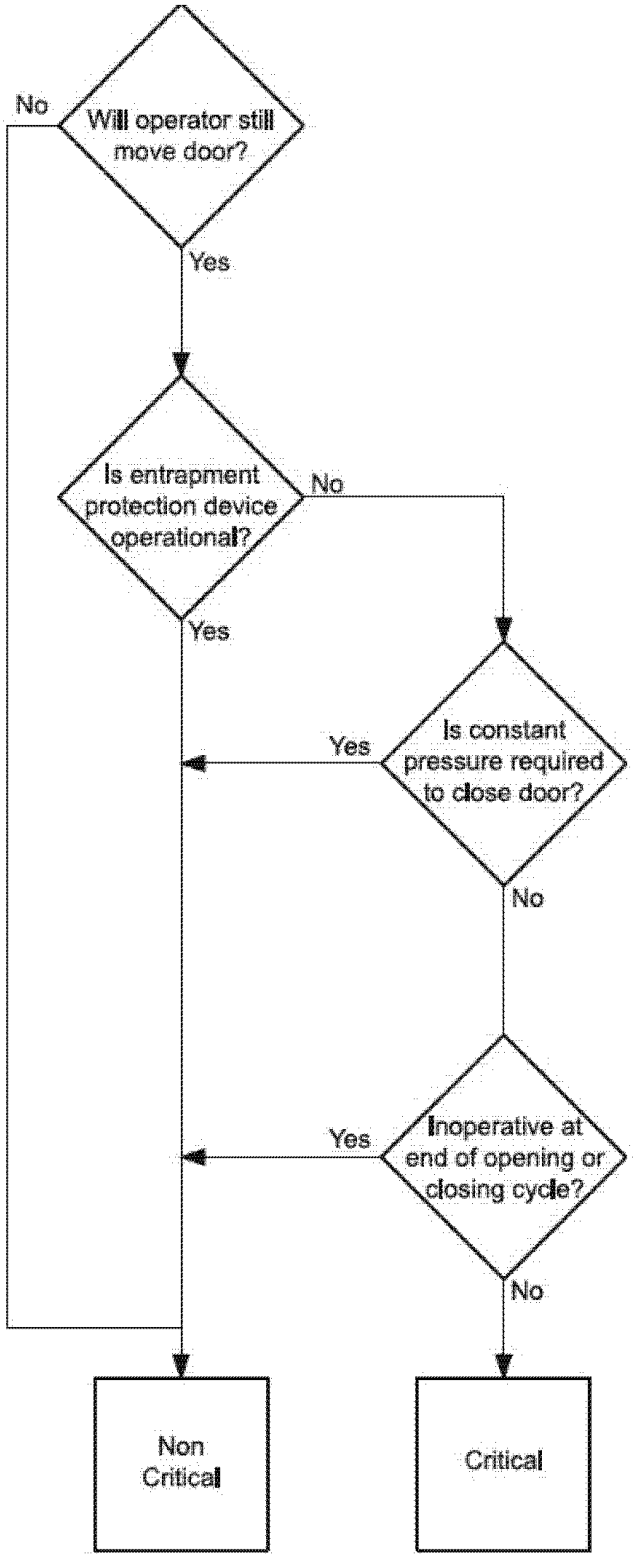

Figure 2 to Subpart A of Part 1211—Nozzle SECTION A-A

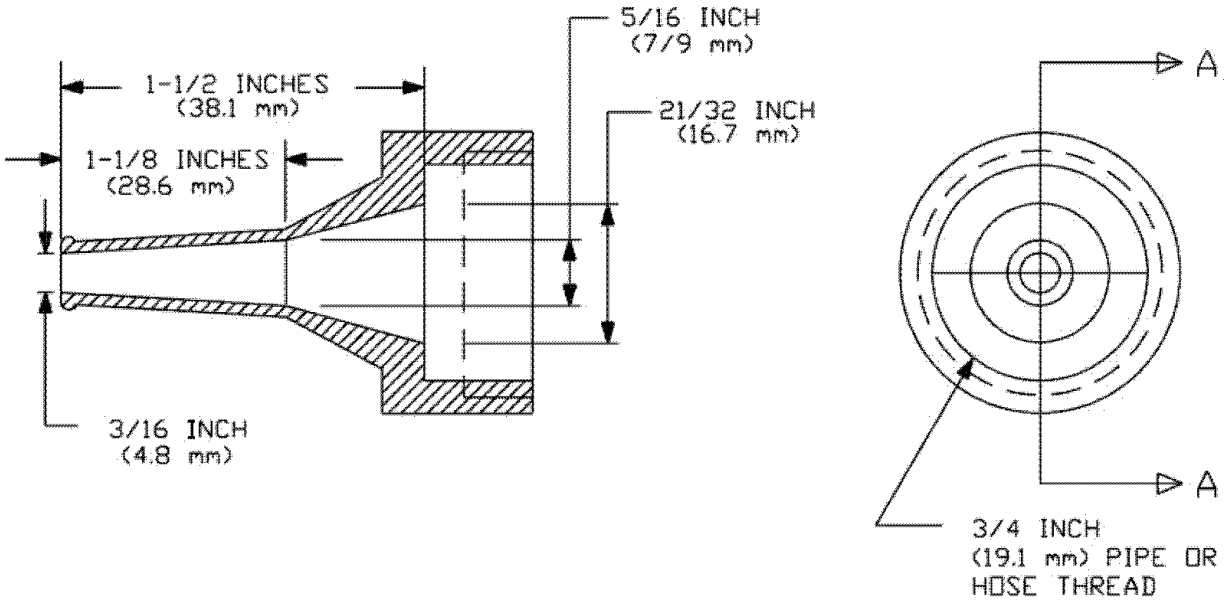

Figure 3 to Subpart A of Part 1211—Stationary Obstruction

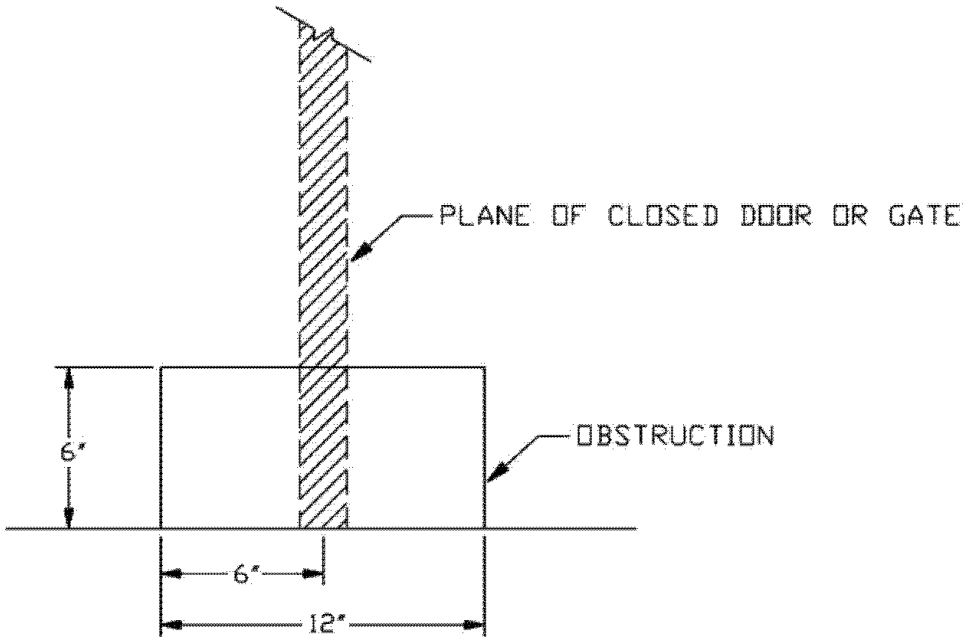

Figure 4 to Subpart A of Part 1211—Moving Obstruction

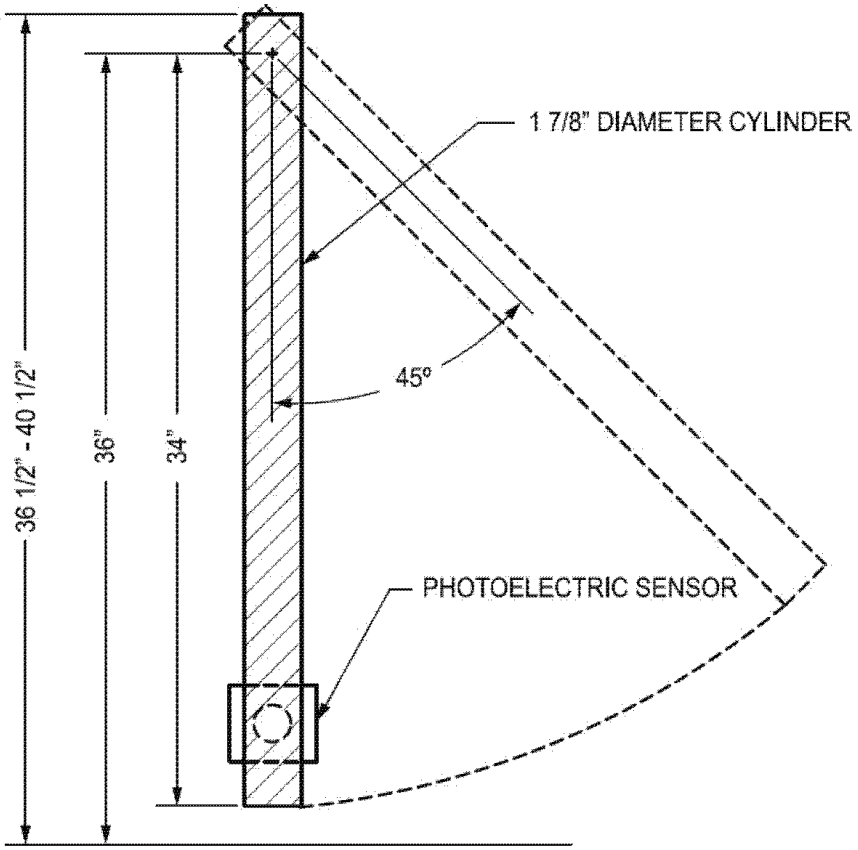

Figure 5 to Subpart A of Part 1211—Ambient Light Test

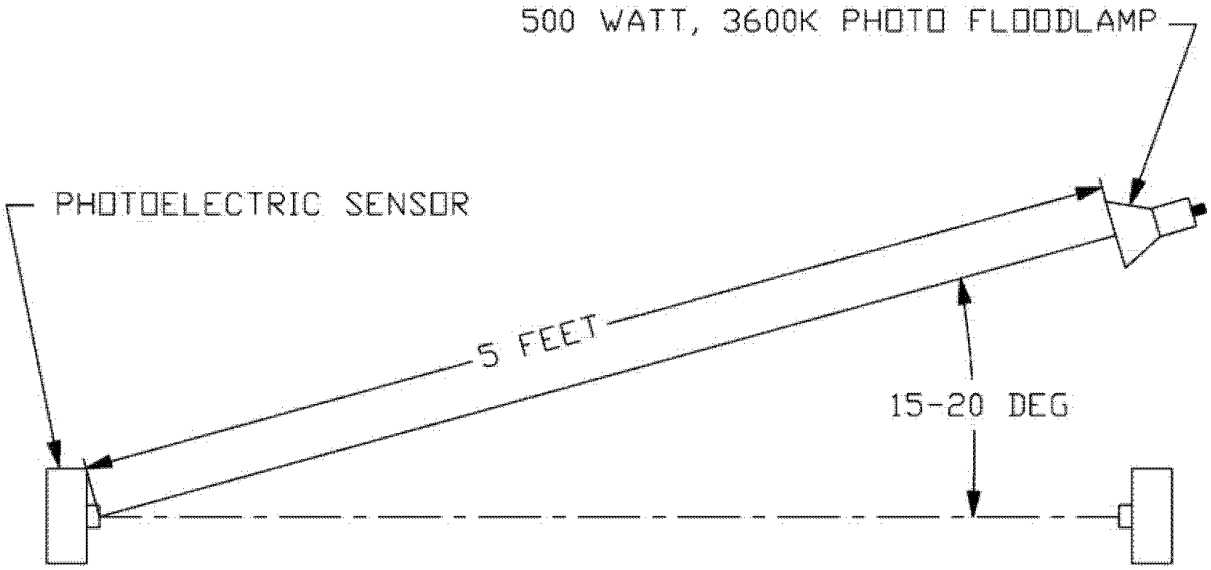

Figure 6 to Subpart A of Part 1211—Edge Sensor Normal Operation Test

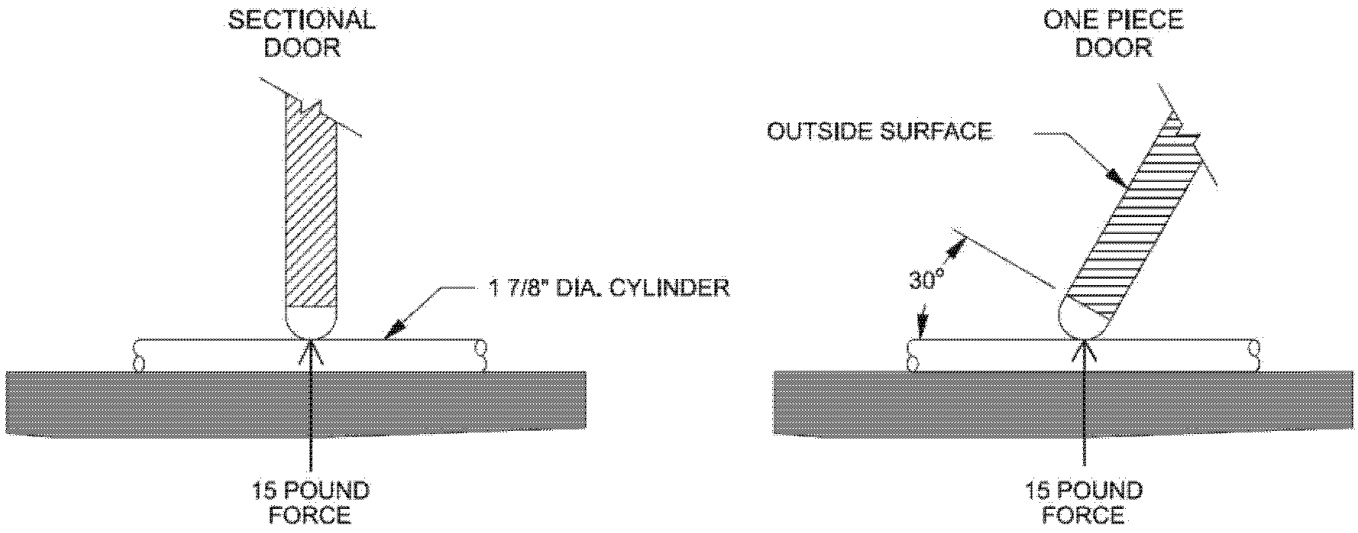

Figure 7 to Subpart A of Part 1211—PUNCTURE PROBE

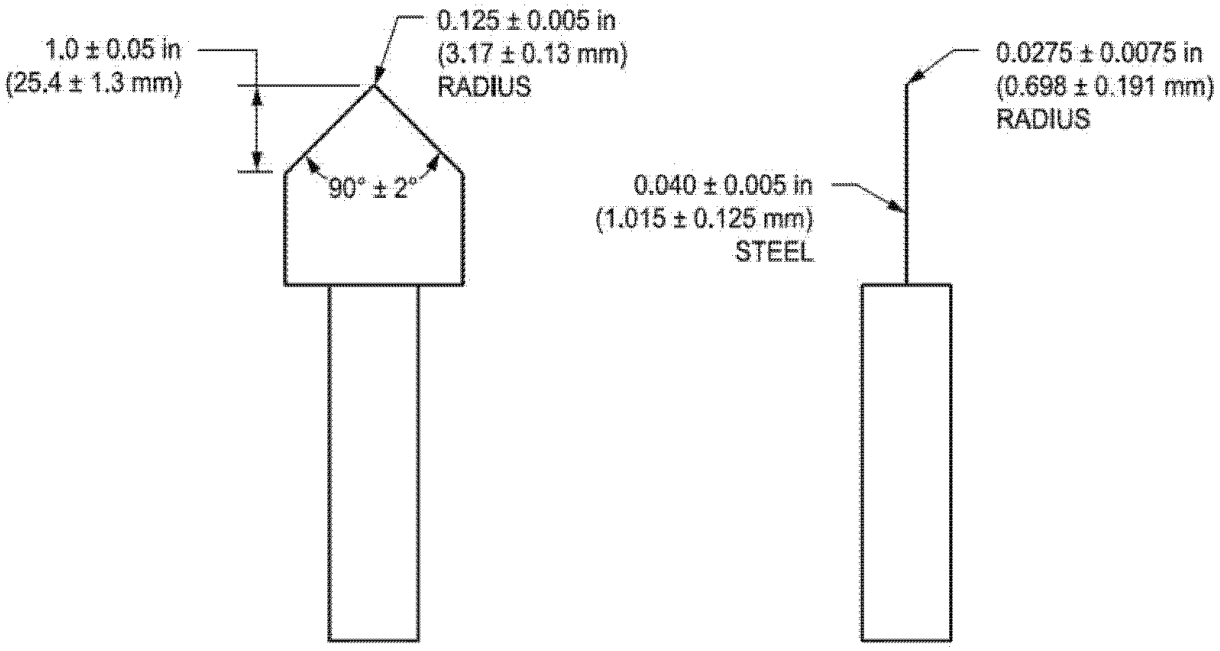

Figure 8 to Subpart A of Part 1211—Example Test Apparatus for Measurements At 12 Inches or Greater

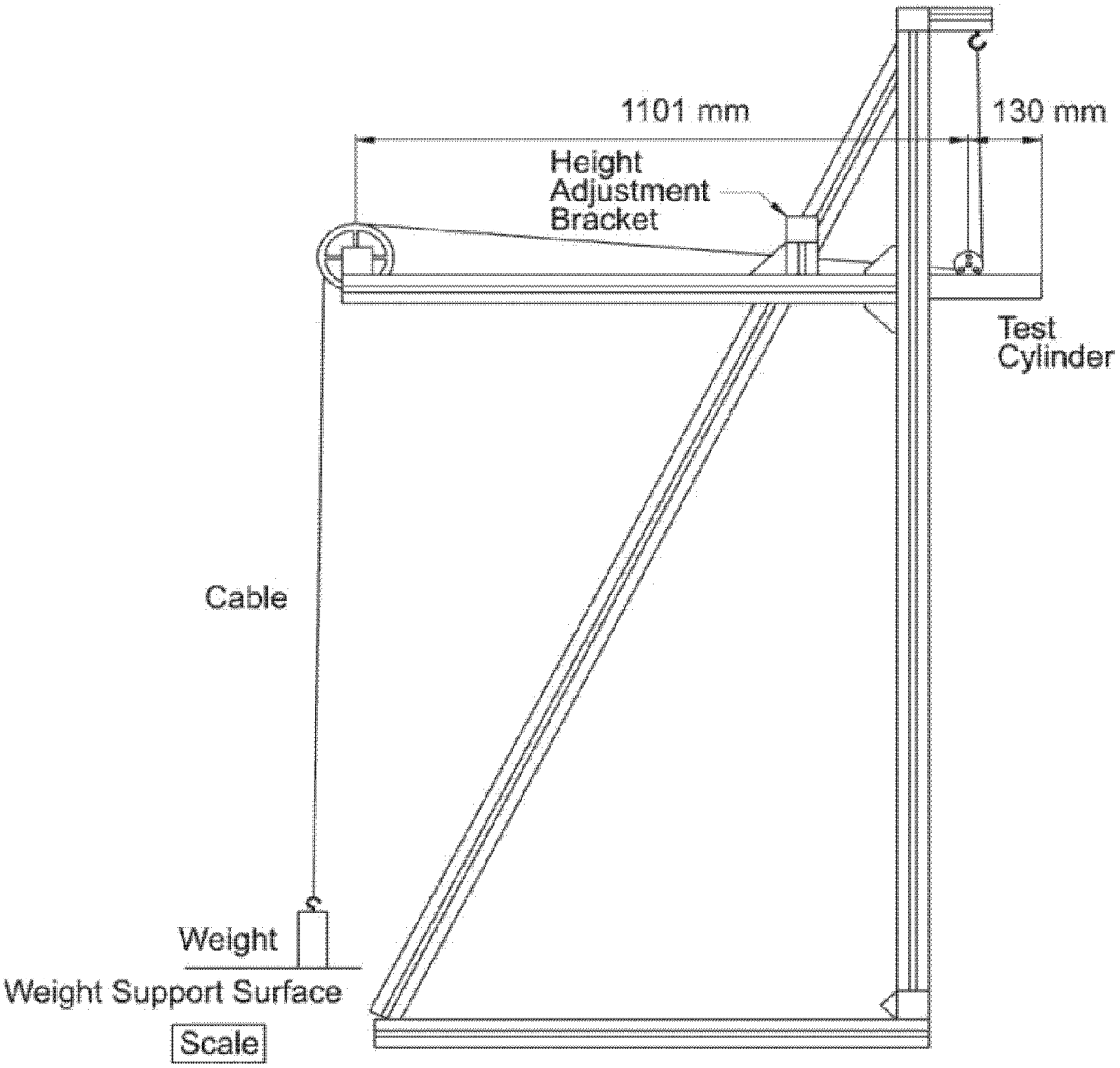

Figure 9 to Subpart A of Part 1211—Example Test Apparatus for Measurements At 12 Inches or Greater

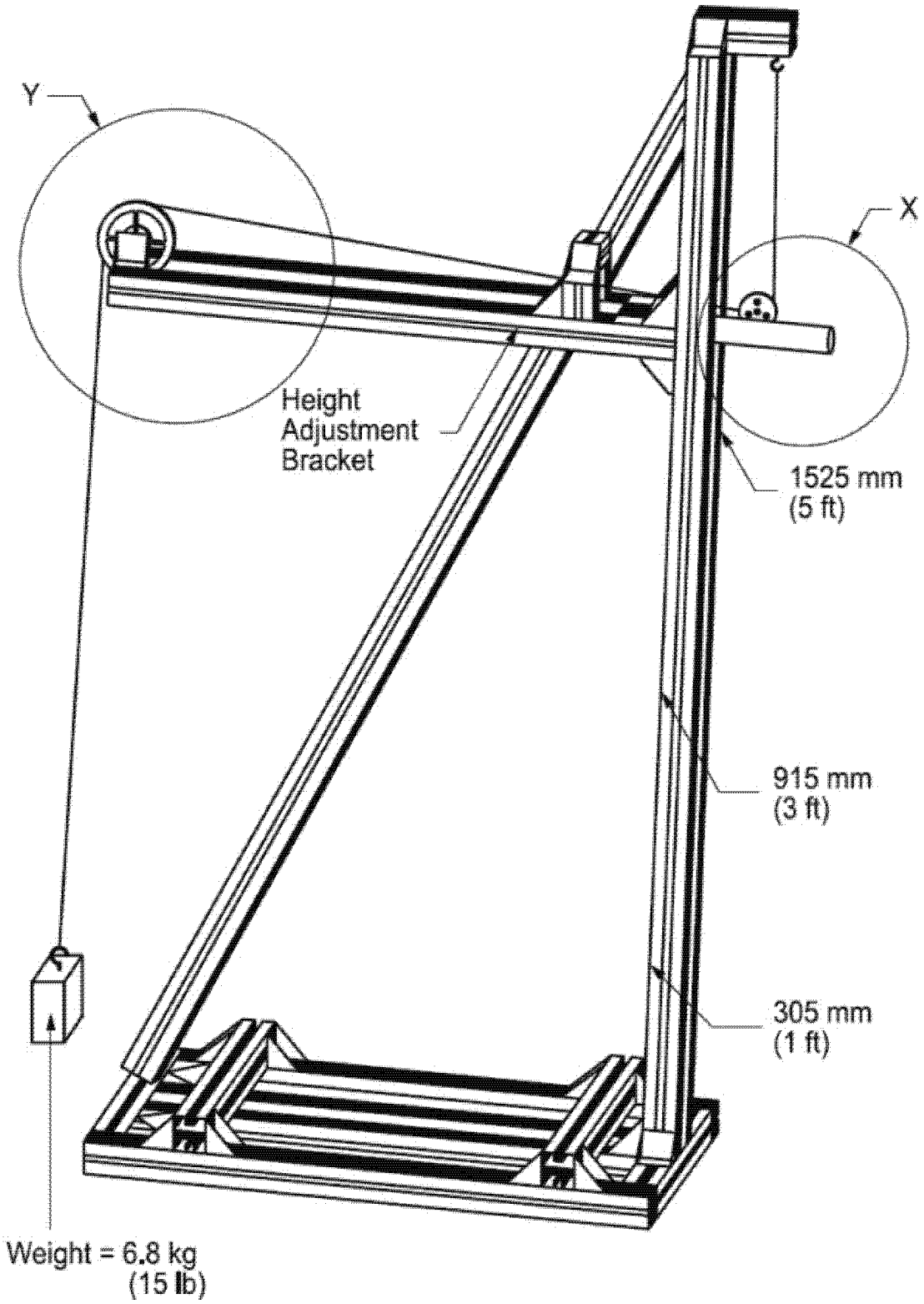

Figure 10 to Subpart A of Part 1211—Example Test Apparatus for Measurements At 12 Inches or Greater

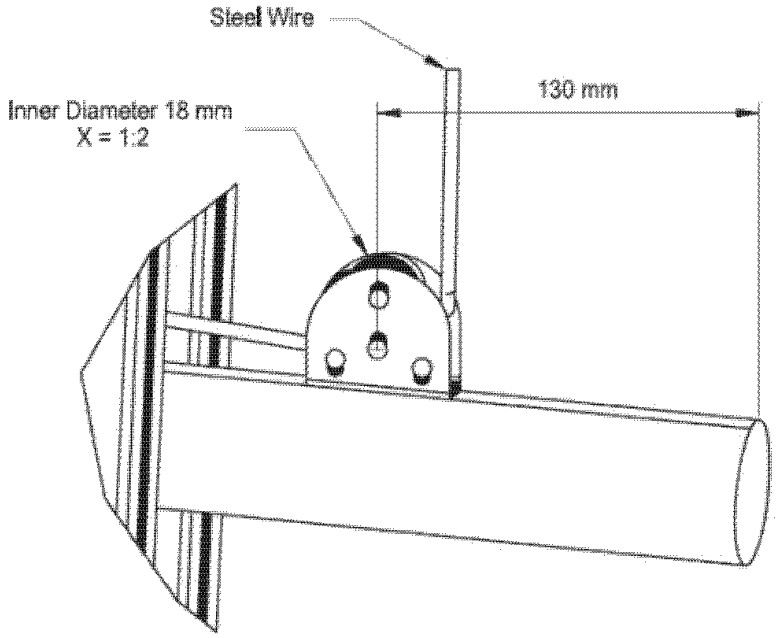

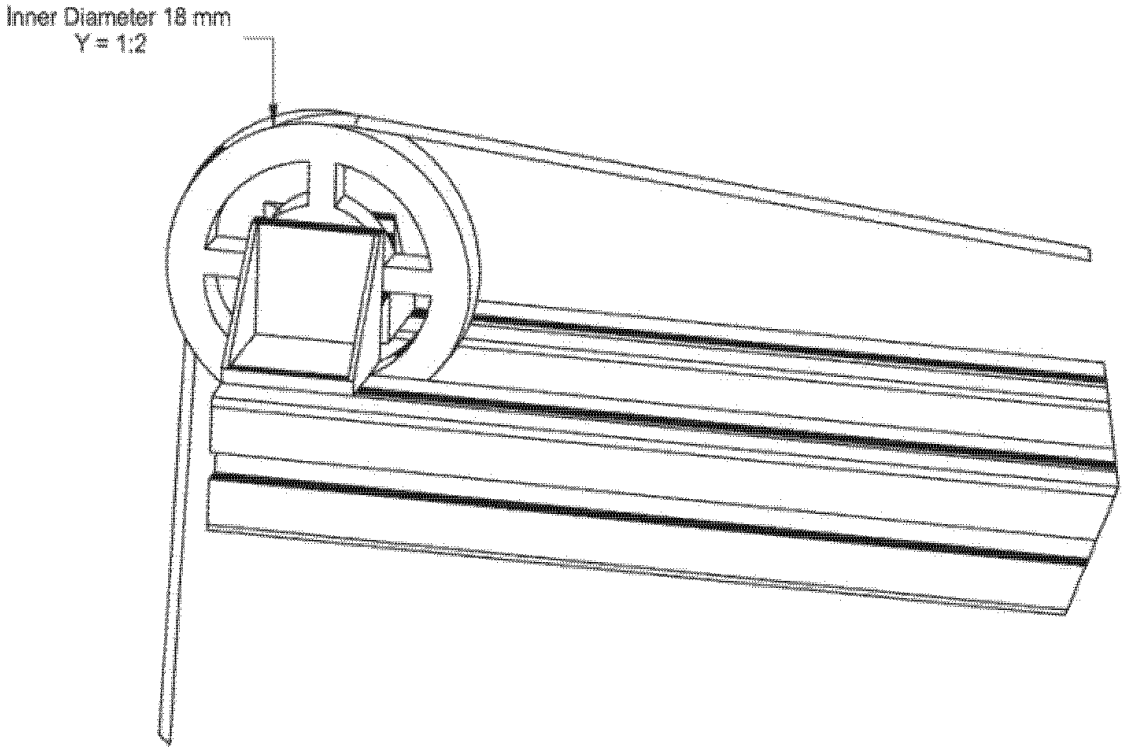

Table to Subpart A of Part 1211—Physical Properties of Gasket-Accelerated Aging Test

Table 1

PHYSICAL PROPERTIES OF GASKET-ACCELERATED AGING TEST

	Before Accelerated Aging	After Accelerated Aging
Recovery -- Maximum set when 2-inch (50.8-mm) gauge marks are stretched to 5 inches (127 mm), held for 2 minutes, and measured 2 minutes after release	1/2 inch (12.7 mm)	--
Elongation -- Minimum increase in distance between 2-inch gauge marks at break	250 percent [2 to 7 inches (50.8—178.8 mm)]	65 percent of original
Tensile Strength -- Minimum force at breaking point	850 pounds per square inch (59 mPa)	75 percent of original

Dated: August 25, 2015.

Todd A. Stevenson,

Secretary, Consumer Product Safety Commission.

[FR Doc. 2015–21340 Filed 9–1–15; 8:45 am]

BILLING CODE 6355–01–C

DEPARTMENT OF THE TREASURY

Internal Revenue Service

26 CFR Part 1

[REG–155164–09]

RIN 1545–BJ48

United States Property Held by Controlled Foreign Corporations in Transactions Involving Partnerships; Rents and Royalties Derived in the Active Conduct of a Trade or Business

AGENCY: Internal Revenue Service (IRS), Treasury.

ACTION: Notice of proposed rulemaking; notice of proposed rulemaking by cross-reference to temporary regulation.

SUMMARY: This document contains proposed regulations that provide rules regarding the treatment as United States property of property held by a controlled foreign corporation (CFC) in connection with certain transactions involving partnerships. In addition, in the Rules and Regulations section of this issue of the **Federal Register**, the Department of Treasury (Treasury Department) and the IRS are issuing temporary regulations under sections 954 and 956, the text of which also serves as the text of certain provisions of these proposed regulations. The proposed regulations affect United States shareholders of CFCs.

DATES: Written or electronic comments and requests for a public hearing must be received by December 1, 2015.

ADDRESSES: Send submissions to: CC:PA:LPD:PR (REG–155164–09), Room 5203, Internal Revenue Service, P.O. Box 7604, Ben Franklin Station, Washington, DC 20044. Submissions may be hand-delivered Monday through Friday between the hours of 8 a.m. and 4 p.m. to CC:PA:LPD:PR (REG–155164–09), Courier's Desk, Internal Revenue Service, 1111 Constitution Avenue NW., Washington, DC, or sent electronically via the Federal eRulemaking Portal at *http://www.regulations.gov* (IRS REG–155164–09).

FOR FURTHER INFORMATION CONTACT: Concerning the proposed regulations, Rose E. Jenkins, (202) 317–6934; concerning submissions of comments or requests for a public hearing, Regina Johnson, (202) 317–6901 (not toll-free numbers).

SUPPLEMENTARY INFORMATION:

Background

This document contains proposed amendments to 26 CFR part 1 under section 956. Section 956 determines the amount that a United States shareholder (as defined in section 951(b)) of a CFC must include in gross income with respect to the CFC under section 951(a)(1)(B). This amount is determined, in part, based on the average amount of United States property held, directly or indirectly, by the CFC at the close of each quarter during its taxable year. For this purpose, in general, the amount taken into account with respect to any United States property is the adjusted basis of the property, reduced by any liability to which the property is

subject. See section 956(a) and § 1.956–1(e).

Section 956(e) grants the Secretary authority to prescribe such regulations as may be necessary to carry out the purposes of section 956, including regulations to prevent the avoidance of section 956 through reorganizations or otherwise. In addition, section 956(d) grants the Secretary authority to prescribe regulations pursuant to which a CFC that is a pledgor or guarantor of an obligation of a United States person is considered to hold the obligation.

The current regulations under section 956 do not specifically address when the obligations of a foreign partnership will be treated as United States property. The preamble to proposed regulations under section 954(i) (REG–106418–05), published in the **Federal Register** on January 17, 2006 (71 FR 2496), requested comments regarding the application of section 956 to loans made by a CFC to a foreign partnership in which one or more partners are United States shareholders of the CFC. After considering the comments received, the Treasury Department and the IRS have determined to issue these regulations that propose new rules concerning the treatment of obligations of, and United States property held by, a foreign partnership for purposes of section 956.

The temporary regulations in the Rules and Regulations section of this issue of the **Federal Register** amend the Income Tax Regulations (26 CFR part 1) relating to sections 954 and 956. The text of the temporary regulations also serves as the text of certain provisions of the proposed regulations herein. The preamble to the temporary regulations explains the temporary regulations and the corresponding proposed regulations.

Explanation of Provisions

1. Obligations of Foreign Partnerships

A. General Rule

Comments received in response to the request for comments in the preamble to the proposed regulations under section 954(i) recommended that the general rule under section 956 should treat an obligation of a foreign partnership held by a CFC as an obligation of a foreign person, rather than as an obligation of its partners, including any partners that are United States persons. Those comments noted that the inclusion of a domestic partnership in the definition of a United States person in section 7701 causes an obligation of a domestic partnership to be treated as an obligation of a United States person for purposes of section 956. Based on that observation, the comments asserted that section 956 implicitly treats both domestic and foreign partnerships as entities, rather than as aggregates of their partners, for purposes of determining whether an obligation of a partnership is United States property, such that an obligation of a foreign partnership with one or more partners that are United States persons should not be treated as an obligation of a United States person for purposes of section 956. The comments further stated that a general rule that treated an obligation of a foreign partnership as an obligation of a foreign person, rather than a United States person, would be consistent with the purposes of section 956.

The definition of United States person in section 7701(a)(30) includes a domestic partnership, such that an obligation of a domestic partnership generally is an obligation of a United States person for purposes of section 956. In contrast, section 7701 contains no corresponding definition of foreign person that includes a foreign partnership, nor any residual definition treating a person that is not a United States person as a foreign person. Moreover, section 956 does not address the status of an obligation of a foreign partnership as an obligation of a United States person or as United States property. Section 956(e), however, provides that the Secretary shall prescribe such regulations as may be necessary to carry out the purposes of section 956, including regulations to prevent the avoidance of section 956. Additionally, the Code and Regulations alternately treat partnerships either as aggregates of their partners or as entities, depending on the context and relevant policy considerations. For example, current law under section 956 employs both approaches with regard to domestic partnerships, applying an aggregate approach with respect to United States property held through a domestic partnership and an entity approach with respect to the obligations of a domestic partnership.

Section 956 is intended to prevent a United States shareholder of a CFC from inappropriately deferring U.S. taxation of CFC earnings and profits by ''prevent[ing] the repatriation of income to the United States in a manner which does not subject it to U.S. taxation.'' H.R. Rep. No. 87–1447, 87th Cong., 2d Sess., at 58 (1962). In the absence of section 956, a United States shareholder of a CFC could access the CFC's funds (untaxed earnings and profits) in a variety of ways other than by the payment of an actual taxable dividend, such that there would be no reason for the United States shareholder to incur the dividend tax. Section 956 ensures that, to the extent CFC earnings are made available for use in the United States or for use by the United States shareholder, the United States shareholder of the CFC is subject to current U.S. taxation with respect to such amounts. Accordingly, under section 956, the investment by a CFC of its earnings and profits in United States property is ''taxed to the [CFC's] shareholders on the grounds that this is substantially the equivalent of a dividend.'' S. Rep. No. 87–1881, 87th Cong., 2d Sess., at 88 (1962).

The Treasury Department and the IRS have determined that failing to treat an obligation of a foreign partnership as an obligation of its partners could allow deferral of U.S. taxation of CFC earnings and profits in a manner inconsistent with the purposes of section 956. When a United States shareholder can conduct operations through a foreign partnership using deferred CFC earnings, those earnings effectively have been made available to the United States shareholder. Additionally, because assets of a partnership generally are available to the partners without additional U.S. tax, a United States shareholder potentially could directly access deferred CFC earnings lent to a foreign partnership in which the United States shareholder is a partner without those earnings becoming subject to current U.S. tax by causing the partnership to make a distribution.

In light of these considerations, these proposed regulations treat an obligation of a foreign partnership as an obligation of its partners for purposes of section 956, subject to the exception described in Part I.B of this preamble for obligations of foreign partnerships in which neither the lending CFC nor any person related to the lending CFC is a partner. More specifically, proposed § 1.956–4(c)(1) generally treats an obligation of a foreign partnership as an obligation of the partners to the extent of each partner's share of the obligation as determined in accordance with the partner's interest in partnership profits. The Treasury Department and the IRS have considered various methods for determining a partner's share of a partnership obligation, including the regulations under section 752 for determining a partner's share of partnership liabilities, the partner's liquidation value percentage (discussed in Part 3 of this preamble), and the partner's interest in partnership profits. Using the partner's interest in partnership profits to determine a partner's share of a partnership obligation is consistent with the observation that, to the extent the

proceeds of a partnership borrowing are used by the partnership to invest in profit-generating activities, partners in the partnership (including service partners with limited or no partnership capital) will benefit from the partnership obligation to the extent of their interests in the partnership profits. Taking this into account along with considerations of administrability, the Treasury Department and the IRS believe that it is appropriate to determine a partner's share of a foreign partnership's obligation in accordance with the partner's interest in partnership profits. However, the Treasury Department and the IRS solicit comments on whether the liquidation value percentage method or another method would be a more appropriate basis for determining a partner's share of a foreign partnership's obligation.

The determination of a partner's share of the obligation will be made as of the close of each quarter of the CFC's taxable year in connection with the calculation of the amount of United States property held by the CFC for purposes of section 956(a)(1)(B). Thus, for example, if a partner in a foreign partnership is a United States shareholder of a CFC, an obligation of the partnership that is held by the CFC will be treated as United States property (subject to the exception described in Part 1.B of this preamble for obligations of foreign partnerships in which neither the lending CFC nor any person related to the lending CFC is a partner) to the extent of the United States shareholder partner's share of the obligation as determined in accordance with the partner's interest in partnership profits as of the close of each quarter of the CFC's taxable year.

The general rule in proposed § 1.956–4(c)(1) also applies to determine the extent to which a CFC guarantees or otherwise supports an obligation of a related United States person when the related United States person is a partner in a foreign partnership that incurred the obligation that is the subject of the CFC's credit enhancement. Likewise, if a CFC is a partner in a foreign partnership that owns property that would be United States property if held by the CFC, and the property is subject to a liability that would constitute a specific charge within the meaning of § 1.956–1(e)(1), the CFC's share of the liability, as determined under proposed § 1.956–4(c)(1), would be treated as a specific charge that, under § 1.956–1(e)(1), could reduce the amount taken into account by the CFC in determining the amount of its share of the United States property, as determined under proposed § 1.956–4(b).

One commenter asserted that if a United States shareholder of a CFC is a partner in a foreign partnership and is treated as having an inclusion under section 956 when the CFC makes a loan to the partnership, as can occur under these proposed regulations, and that partner later receives an actual distribution from the partnership, the partner could have an inappropriate second inclusion when it is deemed to receive a distribution from the partnership upon the partnership's repayment of the loan. The second inclusion in this fact pattern could arise under subchapter K to the extent the partner is required to reduce its basis in its partnership interest under section 733 on the actual distribution and again reduce its basis as a result of a deemed distribution under section 752(b) when its share of the loan is repaid. If the distributions exceed the partner's basis in its partnership, including the increase to basis under section 752(a) when the partnership originally undertook the obligation, the partner could recognize gain under section 731. The commenter suggested that having inclusions under both section 956 and subchapter K in this fact pattern is inappropriate and that changes should be made to the subchapter K rules to prevent this result.

The Treasury Department and the IRS have determined that these proposed regulations and the existing rules under subchapter K and section 959 provide the appropriate result in the fact pattern described in the comment. The potential for gain under subchapter K in the fact pattern exists regardless of the application of section 956. The required inclusion under these proposed regulations to the extent a CFC is treated as holding an obligation of a United States person reflects policy considerations distinct from the policy considerations underlying the potential results under subchapter K. Moreover, in the fact pattern, the United States property held by the CFC in connection with its loan to the partnership generates previously taxed earnings and profits described in section 959(c)(1)(A) that, in general, are available for distribution by the CFC to its United States shareholder without further U.S. tax on the distributed amount. Accordingly, these proposed regulations do not include rules under subchapter K to address this comment.

B. Exception for Obligations of Partnerships in Which Neither the Lending CFC Nor Any Person Related to the Lending CFC Is a Partner

The Treasury Department and the IRS have determined that certain obligations of foreign partnerships should not be treated as United States property. Under section 956(c)(2)(L), obligations of a domestic partnership are excluded from the definition of United States property if neither the CFC nor any related person (as defined in section 954(d)(3)) is a partner in the domestic partnership immediately after the acquisition by the CFC of any obligation of the partnership. The Treasury Department and the IRS have determined that the policy considerations underlying this rule are also relevant for comparable foreign partnerships. See H.R. Conf. Rep. No. 108–755, 108th Cong., 2d Sess., at 391 (2004); H.R. Rep. No. 108–548, 108th Cong., 2d Sess., at 198 (2004); S. Rep. No 108–192, 108th Cong., 1st Sess., at 46 (2003). Accordingly, proposed § 1.956–4(c)(2) provides that an obligation of a foreign partnership is treated as an obligation of the foreign partnership (and not as an obligation of its partners) for purposes of determining whether a CFC holds United States property if neither the CFC nor any person related to the CFC (within the meaning of section 954(d)(3)) is a partner in the partnership.

C. Special Obligor Rule in the Case of Certain Distributions

The proposed regulations include a special rule that increases the amount of a foreign partnership obligation that is treated as United States property under the general rule when the following requirements are satisfied: (i) a CFC lends funds (or guarantees a loan) to a foreign partnership whose obligation is, in whole or in part, United States property with respect to the CFC pursuant to proposed § 1.956–4(c)(1); (ii) the partnership distributes the proceeds to a partner that is related to the CFC (within the meaning of section 954(d)(3)) and whose obligation would be United States property if held by the CFC; (iii) the foreign partnership would not have made the distribution but for a funding of the partnership through an obligation held (or treated as held) by the CFC; and (iv) the distribution exceeds the partner's share of the partnership obligation as determined in accordance with the partner's interest in partnership profits. When these requirements are satisfied, proposed § 1.956–4(c)(3) provides that the amount of the partnership obligation that is treated as an obligation of the distributee partner (and thus as United States property held by the CFC) is the lesser of the amount of the distribution that would not have been made but for the funding of the partnership and the amount of the partnership obligation.

For example, assume a United States shareholder of a CFC that is related to the CFC within the meaning of section 954(d)(3) has a 60 percent interest in the profits of a foreign partnership and the CFC lends $100 to the partnership. If the partnership, in turn, distributes $100 to the United States shareholder in a distribution that would not have been made but for the funding by the CFC, the CFC will be treated as holding United States property in the amount of $100.

Section 1.956–1T(b)(5) of the temporary regulations published elsewhere in the Rules and Regulations section of this issue of the **Federal Register** under section 956 also addresses the funded distribution fact pattern discussed above. That temporary rule also provides that the obligation of the foreign partnership is treated as an obligation of the distributee partner when similar conditions are satisfied. The Treasury Department and the IRS expect to withdraw § 1.956–1T(b)(5) as unnecessary when proposed § 1.956–4(c), including § 1.956–4(c)(3), is adopted as a final regulation.

2. Pledges and Guarantees

Existing § 1.956–2(c)(1) provides that, subject to an exception, any obligation of a United States person with respect to which a CFC is a pledgor or guarantor is considered for purposes of section 956 to be United States property held by the CFC. In order to better align the regulations with the statutory text of section 956(d), these regulations propose to revise § 1.956–2(c)(1) to clarify that a CFC that is a pledgor or guarantor of an obligation of a United States person is treated as holding the obligation. Accordingly, under the proposed rule, the general exceptions to the definition of United States property would apply to the obligation treated as held by the CFC.

A. Pledges and Guarantees of Foreign Partnership Obligations by CFCs

These proposed regulations provide that the pledge and guarantee rules under § 1.956–2(c) apply to a CFC that directly or indirectly guarantees an obligation of a foreign partnership that is treated as an obligation of a United States person under proposed § 1.956–4(c). Accordingly, if an obligation of a foreign partnership is treated as an obligation of a United States person pursuant to proposed § 1.956–4(c) and a CFC directly or indirectly guarantees the partnership obligation, the CFC will be treated as holding an obligation of the United States person.

B. Pledges and Guarantees of United States Persons' Obligations by Domestic or Foreign Partnerships

These proposed regulations extend the pledge and guarantee rule in § 1.956–2(c)(1) to pledges and guarantees made by partnerships. Thus, proposed § 1.956–2(c)(1) provides that a partnership that guarantees an obligation of a United States person will be treated as holding the obligation for purposes of section 956. As a result, as discussed in Parts 2.D and 3 of this preamble, proposed § 1.956–4(b) will then treat the partners of the partnership that is the pledgor or guarantor as holding shares of that obligation. For example, if a partnership with one CFC partner guarantees an obligation of the CFC's United States shareholder, the CFC will be treated as holding a share of the obligation under proposed §§ 1.956–1(e)(2), 1.956–2(c)(1), and 1.956–4(b).

Under current § 1.956–2(c)(2), a CFC is treated as a pledgor or guarantor of an obligation of a United States person if its assets serve at any time, even though indirectly, as security for the performance of the obligation. Consistent with this rule, a partnership should be considered a pledgor or guarantor of an obligation of a United States person if the partnership's assets serve indirectly as security for the performance of the obligation, for example, because the partnership agrees to purchase the obligation at maturity if the United States person does not repay it. Thus, proposed § 1.956–2(c)(2) applies the indirect pledge or guarantee rule to domestic and foreign partnerships.

In the case of a partnership that is considered a pledgor or guarantor of an obligation under proposed § 1.956–2(c)(2), however, it would not be appropriate to separately apply § 1.956–2(c)(2) directly to a CFC partner in the partnership to treat the partner as a pledgor or guarantor (in addition to treating the partnership as a pledgor or guarantor) solely as a result of the partnership's indirect pledge or guarantee. Therefore, proposed § 1.956–2(c)(2) provides that when a partnership is considered a pledgor or guarantor of an obligation, a CFC that is a partner in the partnership will not be treated as a pledgor or guarantor of the obligation solely as a result of its ownership of an interest in the partnership. Accordingly, the CFC will be treated under proposed § 1.956–4(b) as holding its share of the obligation to which the pledge or guarantee relates as described in Part 2.D of this preamble but will not also be treated as a separate indirect pledgor or guarantor of the obligation. As a result, the CFC will not be treated as holding more than its share of the obligation, as determined under § 1.956–4(b).

C. Pledges and Guarantees of United States Persons' Obligations by CFC Partners

As discussed in Part 1.A of this preamble, under proposed § 1.956–4(c) an obligation of a foreign partnership generally is treated as an obligation of the partners in the partnership. In addition, as discussed in Part 3 of this preamble, a partner in a partnership is treated as holding its attributable share of property held by the partnership. The application of these two rules and the proposed indirect pledge or guarantee rule could create uncertainty. For example, if a CFC and a related United States person were the only partners in a foreign partnership that borrowed from a person unrelated to the partners, an issue could arise as to whether the partnership assets attributed to the CFC under proposed § 1.956–4(b) are considered under proposed § 1.956–2(c)(2) to indirectly serve as security for the performance of the portion of the partnership obligation that is treated as an obligation of the United States person under proposed § 1.956–4(c).

A CFC that is a partner in a partnership should not be treated as a pledgor or guarantor of an obligation of the partnership merely because the CFC partner is treated under proposed § 1.956–4(b) as owning a portion of the partnership assets that support an obligation that is allocated under proposed § 1.956–4(c) to a partner that is a United States person. Accordingly, proposed § 1.956–4(d) provides that, for purposes of section 956 and proposed § 1.956–2(c)(2), if a CFC is a partner in a partnership, the attribution of the assets of the partnership to the CFC under proposed § 1.956–4(b) does not in and of itself give rise to an indirect pledge or an indirect guarantee of an obligation of the partnership that is allocated under proposed § 1.956–4(c) to a partner that is a United States person. This rule is consistent with the new rule under proposed § 1.956–2(c)(2) providing that a CFC that is a partner in a partnership will not be treated, solely as a result of its interest in the partnership, as a pledgor or guarantor of an obligation with respect to which the partnership is considered to be a pledgor or guarantor. However, as under current law, the determination of whether a CFC's assets serve as security for the performance of an obligation for purposes of proposed § 1.956–2(c)(2) is based on all of the facts and circumstances. In appropriate

circumstances, the existence of other factors, such as the use of proceeds from a partnership borrowing, the use of partnership assets as security for a partnership borrowing, or special allocations of partnership income or gain, may result in a CFC partner being considered a pledgor or guarantor of an obligation of the partnership pursuant to proposed § 1.956–2(c)(2) when taken into account in conjunction with the attribution of the assets of the partnership to the CFC.

D. Amount Taken Into Account With Respect to Pledges or Guarantees

Under existing § 1.956–1(e)(2), the amount taken into account by a CFC in determining the amount of its United States property with respect to a pledge or guarantee described in § 1.956–2(c)(1) is the unpaid principal amount of the obligation with respect to which the CFC is a pledgor or guarantor. In connection with the proposed revision to § 1.956–2(c)(1), which treats a partnership as holding an obligation with respect to which it is a pledgor or guarantor (as discussed in Part 2.B of this preamble), these regulations propose to revise § 1.956–1(e)(2) to also apply in cases in which partnerships are pledgors or guarantors of an obligation.

Accordingly, under proposed § 1.956–1(e)(2), as under current law, each pledgor or guarantor is treated as holding the entire unpaid principal amount of the obligation to which its pledge or guarantee relates. As a result, in cases in which there are, with respect to a single obligation, multiple pledgors or guarantors that are CFCs or partnerships in which a CFC is a partner, the aggregate amount of United States property treated as held by CFCs may exceed the unpaid principal amount of the obligation. To the extent that the CFCs have sufficient earnings and profits, there could be multiple section 951 inclusions with respect to the same obligation that exceed, in the aggregate, the unpaid principal amount of the obligation.

The Treasury Department and the IRS are considering whether to exercise the authority granted under section 956(e) to prescribe regulations as may be necessary to carry out the purposes of section 956 to allocate the amount of the obligation among the relevant CFCs so as to eliminate the potential for multiple inclusions and, instead, limit the aggregate inclusions to the unpaid principal amount of the obligation. Comments are requested on whether the Treasury Department and the IRS should adopt such a limitation, and if such a limitation were adopted, on methods to implement the limitation. One approach to implementing such a limitation would be to allow a taxpayer to allocate the unpaid principal amount of the obligation among the guarantor CFCs and partnerships based on any consistently applied, reasonable method selected by the taxpayer that results in aggregate section 951 inclusions equal to the unpaid principal amount.

Alternatively, the Treasury Department and the IRS could seek to establish a generally applicable method for allocating the unpaid principal amount of the obligation among the various guarantors. Allocating the unpaid principal amount of the obligation among multiple CFCs and partnerships in accordance with their available credit capacities measured, for example, by the relative net values of their assets might be broadly consistent with a creditor's analysis of the support for the obligation, but such an approach would give rise to administrability concerns. A more administrable option would be to require taxpayers to allocate the unpaid principal amount of the obligation based on the earnings and profits of the CFCs that are treated as holding the obligation (or portion thereof). Several allocation methods based on earnings and profits are possible, including methods that allocate the unpaid principal amount of the obligation: (i) to all of the CFCs in accordance with their applicable earnings; (ii) to all of the CFCs in accordance with their earnings and profits described in section 959(c)(3); or (iii) first to the CFCs with only earnings and profits described in section 959(c)(3) (in accordance with their section 959(c)(3) earnings and profits), and then to the remainder of the CFCs, based on applicable earnings. All of these approaches could result in aggregate section 951 inclusions (for the year) totaling less than the unpaid principal amount of the obligation (for example, where one or more CFCs has previously taxed earnings and profits that reduce its section 951 inclusion).

In considering the options, the Treasury Department and the IRS will consider whether it is appropriate to select a method that could result in aggregate section 951 inclusions for a year totaling less than the unpaid principal amount of the obligation, the extent to which a particular method creates planning opportunities inconsistent with the policies underlying sections 956 and 959, and how administrable and effective the method is over multiple years. In particular, the Treasury Department and the IRS are concerned that certain proration methods could create an incentive for taxpayers to include as additional pledgors or guarantors of an obligation CFCs with substantial amounts of previously taxed earnings and profits, solely to allocate substantial portions of the obligation to these CFCs and thereby minimize the current section 951 inclusions. There are also a number of complexities that could affect the application of a rule that limits multiple inclusions, including differences in taxable years among the relevant CFCs and fluctuations in the unpaid principal amount of the obligation as well as the earnings and profits of the CFCs. The Treasury Department and the IRS request that comments on potential allocation methods address the issues described in this paragraph.

3. Partnership Property Indirectly Held by a CFC Partner

Under current § 1.956–2(a)(3), if a CFC is a partner in a partnership that holds property that would be United States property if held directly by the CFC partner, the CFC partner is treated as holding an interest in the property based on its interest in the partnership. These proposed regulations provide rules on the determination of the amount that the CFC partner is treated as holding under this rule, which is redesignated in these proposed regulations as proposed § 1.956–4(b).

Under proposed § 1.956–4(b), a CFC partner will be treated as holding its share of partnership property determined in accordance with the CFC partner's liquidation value percentage, taking into account any special allocation of income, or, where appropriate, gain from that property that is not disregarded or reallocated under section 704(b) or any other Code section, regulation, or judicial doctrine and that does not have a principal purpose of avoiding the purposes of section 956. See § 1.704–1(b)(1)(iii). This rule serves, in general, as a reasonable measure of a partner's interest in property held by a partnership because it generally results in an allocation of specific items of property that corresponds with each partner's economic interest in that property, including any income, or gain, that may be subject to special allocations.

These proposed regulations include examples illustrating the application of this proposed rule, including an example that illustrates a case in which it is appropriate to take into account a special allocation of gain because the property is anticipated to appreciate in value but generate relatively little income. Although, proposed § 1.956–4(b) would apply only to property

acquired on or after publication in the **Federal Register** of the Treasury decision adopting the rule as a final regulation, it generally would be reasonable to use the method set forth in proposed § 1.956–4(b) to determine a partner's interest in property acquired prior to finalization.

Although the method provided by proposed § 1.956–4(b) generally should reflect a partner's economic interest in partnership property, the Treasury Department and the IRS solicit comments on whether there may be situations in which the method would not reflect the partners' economic interest in the partnership or its property, and, if so, whether there are alternative measures or rules to better address such circumstances. Furthermore, the Treasury Department and the IRS solicit comments on whether a single method should be used as the general rule for determining both a partner's share of a partnership obligation (as determined under proposed § 1.956–4(c)), discussed in Part 1.A of this preamble) and a partner's share of partnership assets, and, if so, whether the appropriate measure would be a partner's interest in partnership profits, a partner's liquidation value percentage, or an alternative measure.

4. Trade or Service Receivables Acquired From Related United States Persons

Section 956(c)(3) provides that United States property generally includes trade or service receivables acquired from a related United States person in a factoring transaction when the obligor with respect to the receivables is a United States person. Section 1.956–3T(b)(2) provides rules for determining whether a trade or service receivable has been indirectly acquired from a related United States person for purposes of section 956(c)(3). These provisions include a rule that applies to receivables held on a CFC's behalf by a partnership in which the CFC owns (directly or indirectly) a beneficial interest. See § 1.956–3T(b)(2)(ii)(A). This rule is similar to the rule in both current § 1.956–2(a)(3) and proposed § 1.956–4(b). Section 1.956–3T(b)(2) also includes a rule that applies to receivables held on a CFC's behalf by another foreign corporation controlled by the CFC if one of the principal purposes for creating, organizing, or funding such other foreign corporation (through capital contributions or debt) is to avoid the application of section 956. See § 1.956–3T(b)(2)(ii)(B). This rule is similar to a rule in § 1.956–1T(b)(4).

The Treasury Department and the IRS have determined that the rules in § 1.956–3T(b)(2)(ii) applicable to factoring transactions involving partnerships should be consistent with the rules provided in § 1.956–1T(b)(4) and proposed § 1.956–4(b), which generally apply when partnerships own property that would be United States property in the hands of a CFC partner. Accordingly, these proposed regulations propose to revise the rules governing factoring transactions so that rules similar to the rules in current § 1.956–1T(b)(4) and proposed § 1.956–4(b) apply to factoring transactions involving partnerships. These proposed regulations also propose to revise the rules governing factoring transactions to remove the reference to S corporations, which are treated as partnerships for purposes of subpart F, including section 956. See section 1373(a).

5. Obligations of Disregarded Entities and Domestic Partnerships

The Treasury Department and the IRS understand that issues have arisen as to the proper treatment under section 956 of obligations of entities that are disregarded as entities separate from their owner for federal tax purposes. Accordingly, these proposed regulations state explicitly in proposed § 1.956–2(a)(3) that, for purposes of section 956, an obligation of a disregarded entity is treated as an obligation of the owner of the disregarded entity. Thus, for example, an obligation of a disregarded entity that is owned by a domestic corporation is treated as an obligation of the domestic corporation for purposes of section 956. The rule in proposed § 1.956–2(a)(3) follows from the application of the entity classification rules of § 301.7701–3 and is therefore not a change from current law.

In addition, proposed § 1.956–4(e) confirms that, for purposes of section 956, an obligation of a domestic partnership is an obligation of a United States person, regardless of whether the partners in the partnership are United States persons. Under section 956(c)(1)(C), an obligation of a United States person generally is United States property for purposes of section 956 unless an exception in section 956(c)(2) applies to the obligation. For example, as noted in Part 1.B of this preamble, section 956(c)(2)(L) would apply to exclude an obligation of a domestic partnership held by a CFC from the definition of United States property if neither the CFC nor a person related to the CFC (within the meaning of section 954(d)(3)) were a partner in the partnership.

6. Proposed Effective/Applicability Dates

These proposed regulations are proposed to be effective for taxable years of CFCs ending on or after the date of publication in the **Federal Register** of the Treasury decision adopting these rules as final regulations, and taxable years of United States shareholders in which or with which such taxable years end. Most of these rules are proposed to apply to property acquired, or pledges or guarantees entered into, on or after September 1, 2015, including property considered acquired, or pledges or guarantees considered entered into, on or after September 1, 2015 as a result of a deemed exchange pursuant to section 1001. See proposed § 1.956–4(c) (dealing with obligations of foreign partnerships, described in Part 1 of this preamble); proposed §§ 1.956–2(c), 1.956–4(d), and 1.956–1(e)(2) (dealing with pledges or guarantees, including pledges or guarantees either by a partnership or with respect to obligations of a foreign partnership, described in Part 2 of this preamble); and proposed § 1.956–3 (dealing with trade or service receivables acquired from related United States persons, described in Part 4 of this preamble). Two rules, however, are proposed to apply to obligations held on or after the date of publication in the **Federal Register** of the Treasury decision adopting these rules as final regulations. See proposed §§ 1.956–2(a)(3) and 1.956–4(e) (dealing with obligations of disregarded entities and domestic partnerships, respectively, described in Part 5 of this preamble). Finally, proposed § 1.956–4(b) (dealing with partnership property indirectly held by a CFC, described in Part 3 of this preamble) is proposed to apply to property acquired on or after the date of publication in the **Federal Register** of the Treasury decision adopting these rules as final regulations. No inference is intended as to the application of the provisions proposed to be amended by these proposed regulations under current law, including in transactions involving obligations of foreign partnerships. The IRS may, where appropriate, challenge transactions under currently applicable Code or regulatory provisions or judicial doctrines.

Special Analyses

Certain IRS regulations, including this one, are exempt from the requirements of Executive Order 12866, as supplemented and reaffirmed by Executive Order 13563. Therefore, a regulatory assessment is not required. It

has also been determined that section 553(b) of the Administrative Procedure Act (5 U.S.C. Chapter 5) does not apply to these regulations, and because the regulations do not impose a collection of information on small entities, the Regulatory Flexibility Act (5 U.S.C. chapter 6) does not apply. Pursuant to section 7805(f), this notice of proposed rulemaking has been submitted to the Chief Counsel of Advocacy of the Small Business Administration for comment on its impact on small business.

Comments and Requests for Public Hearing

Before these proposed regulations are adopted as final regulations, consideration will be given to any comments that are submitted timely to the IRS as prescribed in this preamble under the ''Addresses'' heading. Treasury and the IRS request comments on all aspects of the proposed rules. All comments will be available at *www.regulations.gov* or upon request. A public hearing will be scheduled if requested in writing by any person that timely submits electronic or written comments. If a public hearing is scheduled, notice of the date, time, and place for the public hearing will be published in the **Federal Register**.

Drafting Information

The principal authors of these proposed regulations are Barbara E. Rasch and Rose E. Jenkins of the Office of Associate Chief Counsel (International). However, other personnel from the Treasury Department and the IRS participated in their development.

List of Subjects in 26 CFR Part 1

Income taxes, Reporting and recordkeeping requirements.

Proposed Amendments to the Regulations

Accordingly, 26 CFR part 1 is proposed to be amended as follows:

PART 1—INCOME TAXES

■ **Paragraph 1.** The authority citation for part 1 is amended by adding entries in numerical order to read in part as follows:

Authority: 26 U.S.C. 7805.

* * * * *

Section 1.956–1 also issued under 26 U.S.C. 956(d) and 956(e).

Section 1.956–2 also issued under 26 U.S.C. 956(d) and 956(e).

Section 1.956–3 also issued under 26 U.S.C. 864(d)(8) and 956(e).

Section 1.956–4 also issued under 26 U.S.C. 956(d) and 956(e).

* * * * *

■ **Par. 2.** Section 1.954–2 is amended by revising paragraphs (c)(1)(i), (c)(1)(iv), (c)(2)(ii), (c)(2)(iii)(E), (c)(2)(viii), (d)(1)(i) and (ii), (d)(2)(ii), (d)(2)(iii)(E), (d)(2)(v), and (j) to read as follows:

§ 1.954–2 Foreign personal holding company income.

* * * * *

(c) * * *

(1) * * *

(i) [The text of proposed amendments to § 1.954–2(c)(1)(i) is the same as the text of § 1.954–2T(c)(1)(i) published elsewhere in this issue of the **Federal Register**].

* * * * *

(iv) [The text of proposed amendments to § 1.954–2(c)(1)(iv) is the same as the text of § 1.954–2T(c)(1)(iv) published elsewhere in this issue of the **Federal Register**].

(2) * * *

(ii) [The text of proposed amendments to § 1.954–2(c)(2)(ii) is the same as the text of § 1.954–2T(c)(2)(ii) published elsewhere in this issue of the **Federal Register**].

(iii) * * *

(E) [The text of proposed amendments to § 1.954–2(c)(2)(iii)(E) is the same as the text of § 1.954–2T(c)(2)(iii)(E) published elsewhere in this issue of the **Federal Register**].

* * * * *

(viii) [The text of proposed amendments to § 1.954–2(c)(2)(viii) is the same as the text of § 1.954–2T(c)(2)(viii) published elsewhere in this issue of the **Federal Register**].

* * * * *

(d) * * *

(1) * * *

(i) [The text of proposed amendments to § 1.954–2(d)(1)(i) is the same as the text of § 1.954–2T(d)(1)(i) published elsewhere in this issue of the **Federal Register**].

(ii) [The text of proposed amendments to § 1.954–2(d)(1)(ii) is the same as the text of § 1.954–2T(d)(1)(ii) published elsewhere in this issue of the **Federal Register**].

(2) * * *

(ii) [The text of proposed amendments to § 1.954–2(d)(2)(ii) is the same as the text of § 1.954–2T(d)(2)(ii) published elsewhere in this issue of the **Federal Register**].

(iii) * * *

(E) [The text of proposed amendments to § 1.954–2(d)(2)(iii)(E) is the same as the text of § 1.954–2T(d)(2)(iii)(E) published elsewhere in this issue of the **Federal Register**].

* * * * *

(v) [The text of proposed amendments to § 1.954–2(d)(2)(v) is the same as the text of § 1.954–2T(d)(2)(v) published elsewhere in this issue of the **Federal Register**].

* * * * *

(j) [The text of proposed amendments to § 1.954–2(j) is the same as the text of § 1.954–2T(j) published elsewhere in this issue of the **Federal Register**].

■ **Par. 3.** Section 1.956–1 is amended by revising paragraphs (b)(4) and (5), (e)(2), and (g), to read as follows:

§ 1.956–1 Shareholder's pro rata share of a controlled foreign corporation's increase in earnings invested in United States property.

* * * * *

(b) * * *

(4) [The text of proposed amendments to § 1.956–1(b)(4) is the same as the text of § 1.956–1T(b)(4) published elsewhere in this issue of the **Federal Register**].

(5) [The text of proposed amendments to § 1.956–1(b)(5) is the same as the text of § 1.956–1T(b)(5) published elsewhere in this issue of the **Federal Register**].

* * * * *

(e) * * *

(2) *Rule for pledges and guarantees.* For purposes of this section, the amount of an obligation treated as held (before application of § 1.956–4(b)) as a result of a pledge or guarantee described in § 1.956–2(c) is the unpaid principal amount of the obligation on the applicable determination date.

* * * * *

(g) through (g)(2) [The text of proposed amendments to § 1.956–1(g) through (g)(2) is the same as the text of § 1.956–1T(g) through (g)(2) published elsewhere in this issue of the **Federal Register**].

(3) Paragraph (e)(2) of this section applies to taxable years of controlled foreign corporations ending on or after the date of publication in the **Federal Register** of the Treasury decision adopting this rule as a final regulation, and taxable years of United States shareholders in which or with which such taxable years end, with respect to pledges or guarantees entered into on or after September 1, 2015. For purposes of this paragraph (g)(3), a pledgor or guarantor is treated as entering into a pledge or guarantee when there is a significant modification, within the meaning of § 1.1001–3(e), of an obligation with respect to which it is a pledgor or guarantor on or after September 1, 2015.

* * * * *

■ **Par. 4.** Section 1.956–2 is amended by:

■ a. Revising paragraphs (a)(3) and (c)(1) and (2).

■ b. Adding *Example 4* to paragraph (c)(3);
■ c. Adding reserved paragraph (g); and
■ d. Adding paragraph (h).

The revisions and additions read as follows:

§ 1.956–2 Definition of United States property.

(a) * * *

(3) *Treatment of disregarded entities.* For purposes of section 956, an obligation of a business entity (as defined in § 301.7701–2(a) of this chapter) that is disregarded as an entity separate from its owner for federal tax purposes under §§ 301.7701–1 through 301.7701–3 of this chapter is treated as an obligation of its owner.

* * * * *

(c) * * * (1) *General rule.* Except as provided in paragraph (c)(4) of this section, for purposes of section 956, any obligation of a United States person with respect to which a controlled foreign corporation or a partnership is a pledgor or guarantor will be considered to be held by the controlled foreign corporation or the partnership, as the case may be. See § 1.956–1(e)(2) for rules that determine the amount of the obligation treated as held by a pledgor or guarantor under this paragraph (c). For rules that treat an obligation of a foreign partnership as an obligation of the partners in the foreign partnership for purposes of section 956, see § 1.956–4(c).

(2) *Indirect pledge or guarantee.* If the assets of a controlled foreign corporation or a partnership serve at any time, even though indirectly, as security for the performance of an obligation of a United States person, then, for purposes of paragraph (c)(1) of this section, the controlled foreign corporation or partnership will be considered a pledgor or guarantor of that obligation. If a partnership is considered a pledgor or guarantor of an obligation, a controlled foreign corporation that is a partner in the partnership will not also be treated as a pledgor or guarantor of the obligation solely as a result of its ownership of an interest in the partnership. For purposes of this paragraph, a pledge of stock of a controlled foreign corporation representing at least 66 2/3 percent of the total combined voting power of all classes of voting stock of such corporation will be considered an indirect pledge of the assets of the controlled foreign corporation if the pledge is accompanied by one or more negative covenants or similar restrictions on the shareholder effectively limiting the corporation's discretion to dispose of assets and/or incur liabilities other than in the ordinary course of business. See § 1.956–4(d) for guidance on the treatment of indirect pledges or guarantees of an obligation of a partnership attributed to its partners under § 1.956–4(c).

(3) * * *

* * * * *

Example 4. (i) *Facts.* USP, a domestic corporation, owns 70% of the stock of FS, a controlled foreign corporation, and a 90% interest in FPRS, a foreign partnership. X, an unrelated foreign person, owns 30% of the stock of FS. Y, an unrelated foreign person, owns a 10% interest in FPRS. There are no special allocations in the FPRS partnership agreement. FPRS borrows $100x from Z, an unrelated person. FS pledges its assets as security for FPRS's performance of its obligation to repay the $100x loan. USP's share of the $100x FPRS obligation, determined in accordance with its interest in partnership profits, is $90x. Under § 1.956–4(c), $90x of the FPRS obligation is treated as an obligation of USP for purposes of section 956.

(ii) *Result.* For purposes of section 956, under paragraph (c)(1) of this section, FS is considered to hold an obligation of USP in the amount of $90x, and thus is treated as holding United States property in the amount of $90x.

* * * * *

(h) *Effective/applicability date.* (1) Paragraph (a)(3) of this section applies to taxable years of controlled foreign corporations ending on or after the date of publication in the **Federal Register** of the Treasury decision adopting this rule as a final regulation, and taxable years of United States shareholders in which or with which such taxable years end, with respect to obligations held on or after the date of publication in the **Federal Register** of the Treasury decision adopting this rule as a final regulation.

(2) Paragraphs (c)(1), (c)(2), and *Example 4* of paragraph (c)(3) of this section apply to taxable years of controlled foreign corporations ending on or after the date of publication in the **Federal Register** of the Treasury decision adopting these rules as final regulations, and taxable years of United States shareholders in which or with which such taxable years end, with respect to pledges and guarantees entered into on or after September 1, 2015. For purposes of this paragraph (h)(2), a pledgor or guarantor is treated as entering into a pledge or guarantee when there is a significant modification, within the meaning of § 1.1001–3(e), of an obligation with respect to which it is a pledgor or guarantor on or after September 1, 2015.

■ **Par. 5.** Section § 1.956–3 is added to read as follows:

§ 1.956–3 Certain trade or service receivables acquired from United States persons.

(a) through (b)(2)(i) [Reserved]. For further guidance, see § 1.956–3T(a) through (b)(2)(i).

(ii) *Acquisition by nominee, pass-through entity, or related foreign corporation.* A controlled foreign corporation is treated as holding a trade or service receivable that is held by a nominee on its behalf, or by a simple trust or other pass-through entity (other than a partnership) to the extent of its direct or indirect ownership or beneficial interest in such simple trust or other pass-through entity. See §§ 1.956–1T(b)(4) and 1.956–4(b) for rules that may treat a controlled foreign corporation as indirectly holding a trade or service receivable held by a foreign corporation or partnership. A controlled foreign corporation that is treated as holding a trade or service receivable held by another person (the *direct holder*) (or that would be treated as holding the receivable if the receivable were United States property or would be United States property if held directly by the controlled foreign corporation) is considered to have acquired the receivable from the person from whom the direct holder acquired the receivable. This paragraph (b)(2)(ii) does not limit the application of paragraph (b)(2)(iii) of this section. The following examples illustrate the application of this paragraph (b)(2)(ii):

Example 1. (i) *Facts.* A domestic corporation, P, wholly owns a controlled foreign corporation, FS, with substantial earnings and profits. FS contributes $200x of cash to a partnership, PRS, in exchange for an 80% partnership interest. An unrelated foreign person contributes real estate located in a foreign country with a fair market value of $50x to PRS for the remaining 20% partnership interest. There are no special allocations in the PRS partnership agreement. PRS uses the $200x of cash received from FS to purchase trade receivables from P. The obligors with respect to the trade receivables are United States persons that are not related to any partner in PRS. The liquidation value percentage, as determined under § 1.956–4(b), for FS with respect to PRS is 80%. A principal purpose of funding PRS (through FS's cash contribution) is to avoid the application of section 956 with respect to FS.

(ii) *Result.* Under § 1.956–4(b)(1), FS is treated as holding 80% of the trade receivables acquired by PRS from P, with a basis equal to $160x (80% × $200x, PRS's basis in the trade receivables). However, because FS controls PRS and a principal purpose of FS funding PRS was to avoid the application of section 956 with respect to FS, under § 1.956–1T(b)(4), if the trade receivables would be United States property if held directly by FS, FS additionally would be treated as holding the trade receivables to the extent that they exceed the amount of the

receivables it holds under § 1.956–4(b), which is $40x ($200x − $160x). Accordingly, under this paragraph (b)(2)(ii), FS is treated as having acquired from P, a related United States person, the trade receivables that it is treated as holding with a basis equal to $200x ($160x + $40x). Thus, FS is treated as holding United States property with a basis of $200x under paragraph (a) of this section.

Example 2. (i) *Facts.* A domestic corporation, P, wholly owns a controlled foreign corporation, FS1, that has earnings and profits of at least $300x. FS1 organizes a foreign corporation, FS2, with a $200x cash contribution. FS2 uses the cash contribution to purchase trade receivables from P. The obligors with respect to the trade receivables are unrelated United States persons. A principal purpose of funding FS2 (through FS1's cash contribution) is to avoid the application of section 956 with respect to FS1.

(ii) *Result.* Under § 1.956–1T(b)(4), if the trade receivables held by FS2 were United States property, FS1 would be treated as holding the trade receivables held by FS2 because FS1 controls FS2 and a principal purpose of FS1 funding FS2 was to avoid the application of section 956 with respect to FS1. Accordingly, under this paragraph (b)(2)(ii), FS1 is treated as having acquired from P, a related United States person, the trade receivables that it would be treated as holding with a basis equal to $200x. Thus, FS1 is treated as holding United States property with a basis of $200x under paragraph (a) of this section.

(b)(2)(iii) through (c) [Reserved]. For further guidance, see § 1.956–3T(b)(2)(iii) through (c).

(d) *Effective/applicability date.* Paragraph (b)(2)(ii) of this section applies to taxable years of controlled foreign corporations ending on or after the date of publication in the **Federal Register** of the Treasury decision adopting this rule as a final regulation, and taxable years of United States shareholders in which or with which such taxable years end, with respect to trade or service receivables acquired on or after September 1, 2015. For purposes of this paragraph (d), a significant modification, within the meaning of § 1.1001–3(e), of a trade or service receivable on or after September 1, 2015 constitutes an acquisition of the trade or service receivable on or after that date.

■ **Par. 6.** Section 1.956–4 is added to read as follows:

§ 1.956–4 Certain rules applicable to partnerships.

(a) *Overview.* This section provides rules concerning the application of section 956 to certain obligations of and property held by a partnership. Paragraph (b) of this section provides rules concerning United States property held indirectly by a controlled foreign corporation through a partnership. Paragraph (c) of this section provides rules that generally treat obligations of a foreign partnership as obligations of the partners in the foreign partnership, as well as a special rule that treats a partner that is a United States person as owing additional amounts of a partnership obligation in certain circumstances. Paragraph (d) of this section sets forth a rule concerning the application of the indirect pledge or guarantee rule to obligations of partnerships. Paragraph (e) of this section provides that obligations of a domestic partnership are obligations of a United States person. Paragraph (f) of this section provides effective and applicability dates. See §§ 1.956–1T(b)(4) and 1.956–2(c) for additional rules applicable to partnerships.

(b) *Property held indirectly through a partnership*—(1) *General rule.* For purposes of section 956, a partner in a partnership is treated as holding its attributable share of any property held by the partnership (including an obligation that the partnership is treated as holding as a result of the application of § 1.956–2(c)). A partner's attributable share of partnership property is determined under the rules set forth in paragraph (b)(2) of this section. An upper-tier partnership's attributable share of the property of a lower-tier partnership is treated as property of the upper-tier partnership for purposes of applying this paragraph (b)(1) to the partners of the upper-tier partnership. For purposes of section 956, a partner's adjusted basis in the property of the partnership equals the partner's attributable share of the partnership's adjusted basis in the property (taking into account any adjustments to basis under section 743(b) (with respect to the partner) or section 734(b) or any similar adjustments to basis), as determined under the rules set forth in paragraph (b)(2) of this section. The rules in § 1.956–1(e)(2) apply to determine the amount of an obligation treated as held by a partnership as a result of the application of § 1.956–2(c). See § 1.956–1T(b)(4) for special rules that may treat a controlled foreign corporation as holding a greater amount of United States property held by a partnership than the amount determined under this section.

(2) *Methodology*—(i) *Liquidation value percentage.* Except as otherwise provided in paragraph (b)(2)(ii) of this section, for purposes of paragraph (b)(1) of this section, a partner's attributable share of partnership property is determined in accordance with the partner's liquidation value percentage. For purposes of this paragraph (b)(2)(i), the liquidation value of a partner's interest in a partnership is the amount of cash the partner would receive with respect to the interest if, immediately after the occurrence of the most recent event described in § 1.704–1(b)(2)(iv)(*f*)(*5*) or § 1.704–1(b)(2)(iv)(*s*)(*1*) (a *revaluation event*), or, if there has been no revaluation event, immediately after the formation of the partnership, as the case may be, the partnership sold all of its assets for cash equal to the fair market value of such assets (taking into account section 7701(g)), satisfied all of its liabilities (other than those described in § 1.752–7), paid an unrelated third party to assume all of its § 1.752–7 liabilities in a fully taxable transaction, and then liquidated. A partner's liquidation value percentage, which is determined upon the formation of a partnership and redetermined upon any revaluation event, irrespective of whether the capital accounts of the partners are adjusted under § 1.704–1(b)(2)(iv)(*f*), is the ratio (expressed as a percentage) of the liquidation value of the partner's interest in the partnership divided by the aggregate liquidation value of all of the partners' interests in the partnership.

(ii) *Special allocations.* For purposes of paragraph (b)(1) of this section, if a partnership agreement provides for the allocation of income (or, where appropriate, gain) from partnership property to a partner that differs from the partner's liquidation value percentage in a particular taxable year (a *special allocation*), then the partner's attributable share of that property is determined solely by reference to the partner's special allocation with respect to the property, provided the special allocation does not have a principal purpose of avoiding the purposes of section 956.

(3) *Examples.* The following examples illustrate the rule of this paragraph (b):

Example 1. (i) *Facts.* USP, a domestic corporation, wholly owns FS, a controlled foreign corporation, which, in turn, owns an interest in FPRS, a foreign partnership. The remaining interest in FPRS is owned by an unrelated foreign person. FPRS holds non-depreciable property, with an adjusted basis of $100x, that would be United States property (''US property'') if held by FS directly. At the close of quarter 1 of year 1, the liquidation value percentage, as determined under paragraph (b)(2) of this section, for FS with respect to FPRS is 25%. There are no special allocations in the FPRS partnership agreement.

(ii) *Result.* Under paragraph (b)(1) of this section, for purposes of section 956, FS is treated as holding its attributable share of the property held by FPRS with an adjusted basis equal to its attributable share of FPRS's adjusted basis in the property. Under paragraph (b)(2) of this section, FS's

attributable share of FPRS's property is determined in accordance with FS's liquidation value percentage, which is 25%. Thus, FS's attributable share of property held by FPRS is 25%, and its attributable share of FPRS's basis in the property is $25x. Accordingly, for purposes of determining the amount of US property held by FS as of the close of quarter 1 of year 1, FS is treated as holding US property with an adjusted basis of $25x.

Example 2. (i) *Facts.* The facts are the same as in Example 1, except that the FPRS partnership agreement, which satisfies the requirements of section 704(b), specially allocates 80% of the income with respect to US property to FS. The special allocation does not have a principal purpose of avoiding the purposes of section 956.

(ii) *Result.* Under paragraph (b)(1) of this section, for purposes of section 956, FS is treated as holding its attributable share of the property held by FPRS with an adjusted basis equal to its attributable share of FPRS's adjusted basis in the property. In general, FS's attributable share of FPRS property is determined in accordance with FS's liquidation value percentage. However, under paragraph (b)(2)(ii) of this section, FS's attributable share of US property is determined in accordance with its special allocation. FS's special allocation percentage for US property is 80%, and thus FS's attributable share of US property held by FPRS is 80% and its attributable share of FPRS's basis in US property is $80x. Accordingly, for purposes of determining the amount of US property held by FS as of the close of quarter 1 of year 1, FS is treated as holding US property with an adjusted basis of $80x.

Example 3. (i) *Facts.* USP, a domestic corporation, wholly owns FS, a controlled foreign corporation, which, in turn, owns an interest in FPRS, a foreign partnership. USP owns the remaining interest in FPRS. FPRS holds property (the ''FPRS property'') that would be United States property (''US property'') if held by FS directly. The FPRS property is anticipated to appreciate in value but generate relatively little income. The US property has an adjusted basis of $100x. The FPRS partnership agreement, which satisfies the requirements of section 704(b), specially allocates 80% of the income with respect to the FPRS property to USP and 80% of the gain with respect to the disposition of FPRS property to FS. The special allocation does not have a principal purpose of avoiding the purposes of section 956.

(ii) *Result.* Under paragraph (b)(2)(ii) of this section, the partners' attributable shares of the FPRS property are determined in accordance with the special allocation of gain. Accordingly, for purposes of determining the amount of US property held by FS in each year that FPRS holds FPRS property, FS's attributable share of the FPRS property is 80% and its attributable share of FPRS's basis in US property is $80x. Thus, FS is treated as holding US property with an adjusted basis of $80x.

(c) *Obligations of a foreign partnership*—(1) *In general.* Except as provided in paragraphs (c)(2) and (3) of this section, for purposes of section 956, an obligation of a foreign partnership is treated as a separate obligation of each of the partners in the partnership to the extent of each partner's share of the obligation. A partner's share of the partnership's obligation is determined in accordance with the partner's interest in partnership profits. The partner's interest in partnership profits is determined by taking into account all facts and circumstances relating to the economic arrangement of the partners. An upper-tier partnership's share of an obligation of a lower-tier partnership is treated as an obligation of the upper-tier partnership for purposes of applying this paragraph (c)(1) to the partners of the upper-tier partnership.

(2) *Exception for obligations of partnerships in which neither the lending controlled foreign corporation nor any person related to the lending controlled foreign corporation is a partner.* For purposes of applying section 956 with respect to a controlled foreign corporation, an obligation of a foreign partnership is treated as an obligation of a foreign partnership, and not as an obligation of its partners, if neither the controlled foreign corporation nor any person related to the controlled foreign corporation within the meaning of section 954(d)(3) is a partner in the partnership. For purposes of section 956, an obligation treated as an obligation of a foreign partnership pursuant to this paragraph (c)(2) is not an obligation of a United States person.

(3) *Special obligor rule in the case of certain partnership distributions.* For purposes of determining a partner's share of a foreign partnership's obligation under section 956, if the foreign partnership distributes an amount of money or property to a partner that is related to a controlled foreign corporation within the meaning of section 954(d)(3) and whose obligation would be United States property if held (or if treated as held) by the controlled foreign corporation, and the foreign partnership would not have made the distribution but for a funding of the partnership through an obligation held (or treated as held) by a controlled foreign corporation, notwithstanding § 1.956–1(e), the partner's share of the partnership obligation is the greater of—

(i) The partner's share of the partnership obligation as determined under paragraph (c)(1) of this section; and

(ii) The lesser of the amount of the distribution that would not have been made but for the funding of the partnership and the amount of the obligation (as determined under § 1.956–1(e)).

(4) *Examples.* The following examples illustrate the rules of this paragraph (c):

Example 1. (i) *Facts.* USP, a domestic corporation, wholly owns FS, a controlled foreign corporation, and owns a 90% interest in the partnership profits of FPRS, a foreign partnership. X, a foreign person that is unrelated to USP or FS, owns a 10% interest in the partnership profits of FPRS. FPRS borrows $100x from FS. FS's basis in the FPRS obligation is $100x.

(ii) *Result.* Under paragraph (c)(1) of this section, for purposes of section 956, the obligation of FPRS is treated as obligations of its partners (USP and X) to the extent of each partner's interest in the partnership profits of FPRS. Because USP, a partner in FPRS, is related to FS within the meaning of section 954(d)(3), the exception in paragraph (c)(2) of this section does not apply. Based on its interest in FPRS's profits, USP's attributable share of the FPRS obligation is $90x. Accordingly, for purposes of section 956, $90x of the FPRS obligation held by FS is treated as an obligation of USP and is United States property within the meaning of section 956(c). Therefore, on the date the loan is made, FS is treated as holding United States property of $90x.

Example 2. (i) *Facts.* The facts are the same as in paragraph (i) of Example 1, except that USP owns 40% of the stock of FS and is not a related person (as defined in section 954(d)(3)) with respect to FS. Y, a United States person that is unrelated to USP or X, owns the remaining 60% of the stock of FS.

(ii) *Result.* Because neither FS nor any person related to FS within the meaning of section 954(d)(3) is a partner in FPRS, the exception in paragraph (c)(2) of this section applies to treat the FPRS obligation as an obligation of a foreign partnership and not an obligation of a United States person. Therefore, paragraph (c)(1) of this section does not apply, and FS is not treated as holding United States property.

Example 3. (i) *Facts.* USP, a domestic corporation, wholly owns FS, a controlled foreign corporation. USP has a 60% interest in the partnership profits of FPRS, a foreign partnership. FS has a 30% interest in the partnership profits of FPRS. U.S.C., a domestic corporation that is unrelated to USP and FS, has a 10% interest in the partnership profits of FPRS. FPRS borrows $100x from an unrelated person. FS guarantees the FPRS obligation.

(ii) *Result.* Under paragraph (c)(1) of this section, for purposes of section 956, the obligation of FPRS is treated as obligations of its partners (USP, FS, and U.S.C.) to the extent of each partner's interest in the partnership profits of FPRS. Because USP, a partner in FPRS, is related to FS within the meaning of section 954(d)(3), and because FS is a partner in FPRS, the exception in paragraph (c)(2) of this section does not apply. Based on their interests in partnership profits, USP's attributable share of the FPRS obligation is $60x, and U.S.C.'s attributable share of the FPRS obligation is $10x. For purposes of section 956, $60x of the FPRS obligation is treated as an obligation of USP,

and $10x of the FPRS obligation is treated as an obligation of U.S.C.. Under § 1.956–2(c)(1), FS is treated as holding the obligations of USP and U.S.C. that FS guaranteed. All of the exceptions to the definition of United States property contained in section 956 and § 1.956–2 apply to determine whether the obligations of USP and U.S.C. treated as held by FS constitute United States property. Accordingly, the obligation of U.S.C. is not United States property under section 956(c)(2)(F) and § 1.956–2(b)(1)(viii). The obligation of USP, however, is United States property within the meaning of section 956(c). Therefore, on the date the guarantee is made, FS is treated as holding United States property of $60x.

Example 4. (i) *Facts.* USP, a domestic corporation, wholly owns FS, a controlled foreign corporation. USP has a 70% interest in the partnership profits of FPRS, a foreign partnership. A domestic corporation that is unrelated to USP and FS has a 30% interest in the partnership profits of FPRS. FPRS borrows $100x from FS and makes a distribution of $80x to USP. FPRS would not have made the distribution to USP but for the funding of FPRS by FS.

(ii) *Result.* Because USP, a partner in FPRS, is related to FS within the meaning of section 954(d)(3), the exception in paragraph (c)(2) of this section does not apply. Moreover, an obligation of USP held by FS would be United States property. USP's attributable share of the FPRS obligation as determined under paragraph (c)(1) of this section in accordance with USP's interest in partnership profits is $70x. Under paragraph (c)(3) of this section, USP's share of the FPRS obligation is the greater of (i) USP's attributable share of the obligation, $70x, or (ii) the lesser of the amount of the distribution, $80x, or the amount of the obligation, $100x. For purposes of section 956, therefore, $80x of the FPRS obligation is treated as an obligation of USP and is United States property within the meaning of section 956(c). Thus, on the date the loan is made, FS is treated as holding United States property of $80x.

(d) *Limitation on a partner's indirect pledge or guarantee.* For purposes of section 956 and § 1.956–2(c), a controlled foreign corporation that is a partner in a partnership is not considered a pledgor or guarantor of the portion of an obligation of the partnership attributed to its partners that are United States persons under paragraph (c) of this section solely as a result of the attribution of a portion of the partnership's assets to the controlled foreign corporation under paragraph (b) of this section.

(e) *Obligations of a domestic partnership.* For purposes of section 956, an obligation of a domestic partnership is an obligation of a United States person. See section 956(c)(2)(L) for an exception from the treatment of such an obligation as United States property.

(f) *Effective/applicability dates.* (1) Paragraph (b) of this section applies to taxable years of controlled foreign corporations ending on or after [DATE OF PUBLICATION OF FINAL RULE], and taxable years of United States shareholders in which or with which such taxable years end, with respect to property acquired on or after [DATE OF PUBLICATION OF FINAL RULE]. For purposes of this paragraph (f)(1), a deemed exchange of property pursuant to section 1001 on or after [DATE OF PUBLICATION OF FINAL RULE] constitutes an acquisition of the property on or after that date.

(2) Paragraph (c) of this section applies to taxable years of controlled foreign corporations ending on or after [DATE OF PUBLICATION OF FINAL RULE], and taxable years of United States shareholders in which or with which such taxable years end, with respect to obligations acquired, or pledges or guarantees entered into, on or after September 1, 2015. For purposes of this paragraph (f)(2), a significant modification, within the meaning of § 1.1001–3(e), of an obligation on or after September 1, 2015 constitutes an acquisition of the obligation on or after that date. Furthermore, for purposes of this paragraph (f)(2), a pledgor or guarantor is treated as entering into a pledge or guarantee when there is a significant modification, within the meaning of § 1.1001–3(e), of an obligation with respect to which it is a pledgor or guarantor on or after September 1, 2015.

(3) Paragraph (d) of this section applies to taxable years of controlled foreign corporations ending on or after [DATE OF PUBLICATION OF FINAL RULE], and taxable years of United States shareholders in which or with which such taxable years end, with respect to pledges or guarantees entered into on or after September 1, 2015. For purposes of this paragraph (f)(3), a pledgor or guarantor is treated as entering into a pledge or guarantee when there is a significant modification, within the meaning of § 1.1001–3(e), of an obligation with respect to which it is a pledgor or guarantor on or after September 1, 2015.

(4) Paragraph (e) of this section applies to taxable years of controlled foreign corporations ending on or after [DATE OF PUBLICATION OF FINAL RULE], and to taxable years of United States shareholders in which or with which such taxable years end, with respect to obligations held on or after [DATE OF PUBLICATION OF FINAL RULE].

John Dalrymple,

Deputy Commissioner for Services and Enforcement.

[FR Doc. 2015–21572 Filed 9–1–15; 8:45 am]

BILLING CODE 4830–01–P

DEPARTMENT OF THE TREASURY

Internal Revenue Service

26 CFR Part 1

[REG–123640–15]

RIN 1545–BM86

Administration of Multiemployer Plan Participant Vote on an Approved Suspension of Benefits Under MPRA

AGENCY: Internal Revenue Service (IRS), Treasury.

ACTION: Notice of proposed rulemaking by cross-reference to temporary regulations.

SUMMARY: Temporary regulations relating to the administration of a multiemployer plan participant vote on an approved suspension of benefits under the Multiemployer Pension Reform Act of 2014 (MPRA) are being issued in the Rules and Regulations section of this issue of the **Federal Register**. The text of those regulations also serves as the text of these proposed regulations.

DATES: Comments and requests for a public hearing must be received by November 2, 2015.

ADDRESSES: Send submissions to: CC:PA:LPD:PR (REG–123640–15), Room 5205, Internal Revenue Service, P.O. Box 7604, Ben Franklin Station, Washington DC 20044. Submissions may be hand-delivered Monday through Friday between the hours of 8 a.m. and 4 p.m. to: CC:PA:LPD:PR (REG–123640–15), Courier's Desk, Internal Revenue Service, 1111 Constitution Avenue NW., Washington, DC, or sent electronically via the Federal eRulemaking Portal at *http://www.regulations.gov* (IRS REG–123640–15).

FOR FURTHER INFORMATION CONTACT: Concerning the regulations, the Department of the Treasury MPRA guidance information line at (202) 622–1559; concerning submission of comments, and the previously-scheduled hearing, Regina Johnson at (202) 317–6901 (not toll-free numbers).

SUPPLEMENTARY INFORMATION:

Paperwork Reduction Act

The collection of information contained in this notice of proposed

rulemaking has been submitted to the Office of Management and Budget for review in accordance with the Paperwork Reduction Act of 1995 (44 U.S.C. 3507(d)) and approved under OMB control number 1545–2260.

The collection of information in the paragraphs of these proposed regulations that cross-reference the temporary regulations that are being published elsewhere in this issue of the **Federal Register** is required for sponsor of a multiemployer defined benefit plan in critical and declining status to satisfy the criteria with respect to the required vote of plan participants and other eligible voters following approval of the plan sponsor's application for a suspension of benefits.

Comments on the collection of information should be sent to the Office of Management and Budget, Attn: Desk Officer for the Department of the Treasury, Office of Information and Regulatory Affairs, Washington, DC 20503, with copies to the Internal Revenue Service, Attn: IRS Reports Clearance Officer, SE:W:CAR:MP:T:T:SP, Washington, DC 20224. Comments on the collection of information should be received by November 2, 2015.

Comments are specifically requested concerning:

Whether the proposed collection of information is necessary for the proper performance of the functions of the IRS, including whether the information will have practical utility;

The accuracy of the estimated burden associated with the proposed collection of information;

How the quality, utility, and clarity of the information to be collected may be enhanced;

How the burden of complying with the proposed collections of information may be minimized, including through the application of automated collection techniques or other forms of information technology; and

Estimates of capital or start-up costs and costs of operation, maintenance, and purchase of service to provide information.

For the paragraphs of the proposed regulations that cross-reference the temporary regulations:

Estimated total average annual reporting or recordkeeping burden: 56 hours.

Estimated average annual burden per recordkeeper: 2 hours.

Estimated number of recordkeepers: 28.

An agency may not conduct or sponsor, and a person is not required to respond to, a collection of information unless it displays a valid control number assigned by the Office of Management and Budget.

Books or records relating to a collection of information must be retained as long as their contents may become material in the administration of any internal revenue law. Generally, tax returns and tax return information are confidential, as required by 26 U.S.C. 6103.

Background and Explanation of Provisions

Section 432(e)(9) of the Internal Revenue Code (Code), as amended by the Multiemployer Pension Reform Act of 2014 (MPRA), permits plan sponsors of certain multiemployer plans to reduce the plan benefits payable to participants and beneficiaries (referred to as a ''suspension of benefits'') if specified conditions are satisfied. Under section 432(e)(9)(H), no suspension of benefits may take effect prior to a vote of the participants of the plan with respect to the suspension. Section 432(e)(9)(H) requires that the vote be administered by the Secretary of the Treasury, in consultation with the Pension Benefit Guaranty Corporation and the Secretary of Labor, within 30 days after approval of a suspension application.

On June 19, 2015, the Treasury Department and the Internal Revenue Service published temporary regulations (TD 9723) under section 432(e)(9) in the **Federal Register** (80 FR 35207) (June 2015 temporary regulations). The June 2015 temporary regulations provide general guidance regarding section 432(e)(9) and outline the requirements for a plan sponsor of a plan that is in critical and declining status to apply for a suspension of benefits and for the Treasury Department to begin processing such an application. A notice of proposed rulemaking cross-referencing the June 2015 temporary regulations (REG–102648–15) was also published in the same issue of the **Federal Register** (80 FR 35262) (June 2015 proposed regulations). Both the June 2015 temporary and proposed regulations reflect consideration of comments received in response to the Request for Information on Suspensions of Benefits under the Multiemployer Pension Reform Act of 2014 published in the **Federal Register** on February 18, 2015 (80 FR 8578).

A public hearing concerning the June 2015 proposed regulations is scheduled for September 10, 2015, beginning at 9:00 a.m. in the Amphitheater of the Ronald Reagan Building and International Trade Center, 1300 Pennsylvania Ave. NW., Washington, DC Persons who wish to present oral comments at that hearing regarding the June 2015 proposed regulations were required to submit written or electronic comments, including an outline of topics to be discussed, by August 18, 2015. Anyone who has submitted a timely request to speak at the September 10, 2015, hearing is also permitted to discuss these proposed regulations at that hearing (without submitting a separate request to discuss these proposed regulations at that hearing).

The June 2015 temporary and proposed regulations set forth many of the rules relating to the participant vote under section 432(e)(9)(H). However, neither the June 2015 temporary regulations nor the June 2015 proposed regulations provide detailed guidance on how the Treasury Department would administer the vote.

The temporary regulations in the Rules and Regulations section of this issue of the **Federal Register** (August 2015 temporary regulations) amend the Income Tax Regulations (26 CFR part 1) relating to the previously reserved paragraph in the June 2015 temporary and proposed regulations regarding the participant vote required under section 432(e)(9)(H).

The August 2015 temporary regulations specify that a participant vote requires the completion of three steps. First, a package of ballot materials is distributed to eligible voters. Second, the eligible voters cast their votes and the votes are collected and tabulated. Third, the Treasury Department (in consultation with the PBGC and Labor Department) determines whether a majority of the eligible voters has voted to reject the proposed suspension. The August 2015 temporary regulations also provide guidance regarding the statement in opposition to the proposed suspension and allow for the publication of a model ballot. The text of the August 2015 temporary regulations also serves as the text of these proposed regulations.

Special Analyses

Certain IRS regulations, including this one, are exempt from the requirements of Executive Order 12866, as supplemented and reaffirmed by Executive Order 13563. Therefore, a regulatory impact assessment is not required. It also has been determined that section 553(b) of the Administrative Procedure Act (5 U.S.C. chapter 5) does not apply to these regulations.

The Regulatory Flexibility Act (RFA) (5 U.S.C. chapter 6) requires an agency to consider whether the rules it proposes will have a significant economic impact on a substantial number of small entities. In this case,

the IRS and the Treasury Department believe that the regulations likely would not have a ''significant economic impact on a substantial number of small entities.'' 5 U.S.C. 605. This certification is based on the fact that the number of small entities affected by this rule is unlikely to be substantial because it is unlikely that a substantial number of small multiemployer plans in critical and declining status will suspend benefits under section 432(e)(9). Pursuant to section 7805(f) of the Code, this notice of proposed rulemaking has been submitted to the Chief Counsel of Advocacy of the Small Business Administration for comment on its impact on small business.

Comments and Request for a Public Hearing

Before these proposed regulations are adopted as final regulations, consideration will be given to any comments that are submitted timely to the Treasury Department and the IRS as prescribed in this preamble under the ''Addresses'' heading. The Treasury Department and the IRS request comments on all aspects of the proposed rules. All comments will be available for public inspection and copying at *www.regulations.gov* or upon request. **Please Note:** All comments will be made available to the public. Do not include any personally identifiable information (such as Social Security number, name, address, or other contact information) or confidential business information that you do not want publicly disclosed. All comments may be posted on the Internet and can be retrieved by most Internet search engines.

If requested in writing by any person who timely submits written comments on these proposed regulations, a public hearing will be scheduled on the contents of this document. Comments and requests for a public hearing must be received by November 2, 2015. If a public hearing is scheduled, notice of the date, time, and place for the public hearing will be published in the **Federal Register**. Please see the ''Background and Explanation of Provisions'' heading for information regarding a public hearing scheduled for September 10, 2015, concerning the June 2015 proposed regulations regarding the Suspension of Benefits under the Multiemployer Pension Reform Act of 2014, during which individuals who have already requested to speak regarding those regulations may also address the substance of these proposed regulations.

Contact Information

For general questions regarding these regulations, please contact the Department of the Treasury MPRA guidance information line at (202) 622–1559 (not a toll-free number). For information regarding a specific application for a suspension of benefits, please contact the Department of the Treasury at (202) 622–1534 (not a toll-free number).

List of Subjects in 26 CFR Part 1

Income taxes, reporting and recordkeeping requirements.

Proposed Amendments to the Regulations

Accordingly, 26 CFR part 1 is proposed to be amended as follows:

PART 1—INCOME TAXES

■ **Paragraph 1.** The authority citation for part 1 continues to read in part as follows:

Authority: 26 U.S.C. 7805 * * *

■ **Par. 2.** Section 1.432(e)(9)–1(h) is amended by revising paragraph (h)(2) and adding paragraphs (h)(3)(iv) and (v) to read as follows:

§ 1.432(e)(9)–1 Benefit suspensions for multiemployer plans in critical and declining status.

* * * * *

(h) * * *

(2) *Participant vote.* [The text of the proposed amendments to § 1.432(e)(9)–1(h)(2) is the same as § 1.432(e)(9)–1T(h)(2) published elsewhere in this issue of the **Federal Register**.]

* * * * *

(3) * * *

(iv) *Statement in opposition to the proposed suspension.* [The text of the proposed amendments to § 1.432(e)(9)–1(h)(3)(iv) is the same as § 1.432(e)(9)–1T(h)(3)(iv) published elsewhere in this issue of the **Federal Register**.]

(v) *Model ballot.* [The text of the proposed amendments to § 1.432(e)(9)–1(h)(3)(v) is the same as § 1.432(e)(9)–1T(h)(3)(v) published elsewhere in this issue of the **Federal Register**.]

* * * * *

John M. Dalrymple,

Deputy Commissioner for Services and Enforcement.

[FR Doc. 2015–21765 Filed 8–31–15; 11:15 am]

BILLING CODE 4830–01–P

DEPARTMENT OF LABOR

Mine Safety and Health Administration

30 CFR Part 75

[Docket No. MSHA–2014–0019]

RIN 1219–AB78

Proximity Detection Systems for Mobile Machines in Underground Mines

AGENCY: Mine Safety and Health Administration, Labor.

ACTION: Proposed rule.

SUMMARY: The Mine Safety and Health Administration (MSHA) is proposing to require underground coal mine operators to equip coal hauling machines and scoops with proximity detection systems. Miners working near these machines face pinning, crushing, and striking hazards that result in accidents involving life threatening injuries and death. The proposal would strengthen protections for miners by reducing the potential for pinning, crushing, or striking accidents in underground coal mines. MSHA is also interested in the application of these proposed requirements to underground metal and nonmetal mines.

DATES: Comments must be received or postmarked by midnight Eastern Daylight Saving Time on December 1, 2015.

ADDRESSES: Submit comments and informational materials, identified by RIN 1219–AB78 or Docket No. MSHA–2014–0019, by one of the following methods:

- *Federal e-Rulemaking Portal: http://www.regulations.gov.* Follow the instructions for submitting comments.
- *Email: zzMSHA-comments@dol.gov.*
- *Fax:* 202–693–9441.
- *Mail:* MSHA, Office of Standards, Regulations, and Variances, 201 12th Street South, Suite 4E401, Arlington, Virginia 22209–3939.
- *Hand Delivery/Courier:* MSHA, 201 12th Street South, Suite 4E401, Arlington, Virginia, between 9:00 a.m. and 5:00 p.m. Monday through Friday, except Federal holidays. Sign in at the receptionist's desk on the 4th floor.

Instructions: All submissions must include MSHA and RIN 1219–AB78 or Docket No. MSHA–2014–0019. Do not include personal information that you do not want publicly disclosed; MSHA will post all comments without change to *http://www.regulations.gov* and *http://www.msha.gov/currentcomments.asp,* including any personal information provided.

Docket: For access to the docket to read comments received, go to *http://www.regulations.gov* or *http://www.msha.gov/currentcomments.asp.* To read background documents, go to *http://www.regulations.gov.* Review the docket in person at MSHA, Office of Standards, Regulations, and Variances, 201 12th Street South, Suite 4E401, Arlington, Virginia, between 9:00 a.m. and 5:00 p.m. Monday through Friday, except Federal Holidays. Sign in at the receptionist's desk on the 4th floor.

Information Collection Supporting Statement: MSHA posts Information Collection Supporting Statements on *http://www.regulations.gov* and on MSHA's Web site at *http://www.msha.gov/regs/fedreg/informationcollection/informationcollection.asp.* A copy of the information collection package is also available from the Department of Labor by request to Michel Smyth at *smyth.michel@dol.gov* (email) or 202–693–4129 (voice).

Preliminary Regulatory Economic Analysis (PREA): MSHA will post the PREA on *http://www.regulations.gov* and on MSHA's Web site at *http://www.msha.gov/rea.htm.*

E-Mail Notification: To subscribe to receive an email notification when MSHA publishes rules, program information, instructions, or policy, in the **Federal Register**, go to *http://www.msha.gov/subscriptions/subscribe.aspx.*

FOR FURTHER INFORMATION CONTACT: Sheila McConnell, Acting Director, Office of Standards, Regulations, and Variances, MSHA, at *mcconnell.sheila.a@dol.gov* (email), 202–693–9440 (voice), or 202–693–9441 (facsimile).

SUPPLEMENTARY INFORMATION:

Table of Contents

I. Introduction
A. Regulatory Authority
B. Background
II. Section-by-Section Analysis
A. § 75.1733(a) Machines Covered
B. § 75.1733(b) Requirements for Proximity Detection Systems
C. § 75.1733(c) Proximity Detection System Checks
D. § 75.1733(d) Certification and Records
III. Preliminary Regulatory Economic Analysis
A. Executive Orders (E.O.) 12866 and 13563
B. Population at Risk
C. Net Benefits
D. Benefits
E. Compliance Costs
IV. Feasibility
A. Technological Feasibility
B. Economic Feasibility
V. Regulatory Flexibility Act and Small Business Regulatory Enforcement Fairness Act
A. Definition of a Small Mine
B. Factual Basis for Certification
VI. Paperwork Reduction Act of 1995
A. Summary
B. Procedural Details
VII. Other Regulatory Considerations
A. The Unfunded Mandates Reform Act of 1995
B. Executive Order 13132: Federalism
C. The Treasury and General Government Appropriations Act of 1999: Assessment of Federal Regulations and Policies on Families
D. Executive Order 12630: Government Actions and Interference With Constitutionally Protected Property Rights
E. Executive Order 12988: Civil Justice Reform
F. Executive Order 13045: Protection of Children From Environmental Health Risks and Safety Risks
G. Executive Order 13175: Consultation and Coordination With Indian Tribal Governments
H. Executive Order 13211: Actions Concerning Regulations That Significantly Affect Energy Supply, Distribution, or Use
I. Executive Order 13272: Proper Consideration of Small Entities in Agency Rulemaking
VIII. References

I. Introduction

The proposed rule would require underground coal mine operators to equip coal hauling machines and scoops on working sections, except longwall working sections, with proximity detection systems according to a phase-in schedule for newly manufactured and existing equipment. The proposed requirements would strengthen protections for miners by reducing the potential for pinning, crushing, or striking injuries to miners who work near these machines. MSHA is also interested in the application of these proposed requirements to underground metal and nonmetal mines.

Proximity detection systems consist of machine-mounted components and, if applicable, miner-wearable components. For proximity detection systems with miner-wearable components, the mine operator would be required to provide a miner-wearable component to be worn by each miner on the working section. The proposed rule would establish performance and maintenance requirements for proximity detection systems and would require training for persons performing the installation and maintenance.

A. Regulatory Authority

This proposed rule is issued under section 101 of the Federal Mine Safety and Health Act of 1977 (Mine Act), as amended.

B. Background

Proximity detection is a technology that uses electronic sensors to detect motion or the location of one object relative to another. Proximity detection systems provide a warning and stop mobile machines before a pinning, crushing, or striking accident occurs that could result in injury or death to miners.

Traditionally, coal hauling machines (shuttle cars, ram cars, and continuous haulage systems) are self-propelled equipment used to transport coal from the working face to a point where the coal is loaded into mine cars or onto a conveyor for transfer to the surface. Scoops are self-propelled general utility vehicles for cleanup of loose coal or debris and moving equipment or supplies. MSHA has evaluated all accident reports involving coal hauling machines and scoops between 1984 and 2014. MSHA has determined that a proximity detection system could have prevented 42 fatalities and 179 injuries resulting from these accidents that occurred on the working section.

In 1998, MSHA evaluated accidents involving remote controlled mining machines and determined that proximity detection systems have the potential to prevent accidents that occur when the machine operator or another miner gets too close to the machine (Dransite, 1998). MSHA noted that if changes in work practices or machine design do not prevent miners from being placed in unsafe locations, the Agency should consider a requirement for proximity detection with automatic machine shutdown. No MSHA-approved proximity detection systems were commercially available for use in underground mines at that time.

In 2002, following a series of fatal pinning, crushing, and striking accidents, MSHA decided to work with the coal mining industry to develop a proximity detection system for use on underground continuous mining machines. Since that time, manufacturers adapted proximity detection for use on other mobile machines. MSHA evaluated several systems and conducted field testing.

In 2010, MSHA introduced an initiative titled ''Safety Practices around Shuttle Cars and Scoops in Underground Coal Mines.'' MSHA initiated this safety campaign to raise the mining industry's awareness of pinning, crushing, or striking hazards associated with mobile mining machines. This initiative included training programs and best practices to

encourage mine operators to train underground coal miners to exercise caution when working around mobile machines. Information regarding this initiative is available at: *http://www.msha.gov/focuson/watchout/watchout.asp.* Even so, 41 pinning, crushing, or striking accidents involving coal hauling machines and scoops have occurred since 2010: 23 that involved coal hauling machines and 18 that involved scoops. Three fatalities occurred in 2013, one involving a scoop and two involving coal hauling machines; and one fatality occurred in 2014 involving a scoop. MSHA determined that proximity detection systems could have prevented these accidents (since these miners were located in a proximity detection system warning/stopping zone).

The Agency published a Request for Information (RFI) on proximity detection systems in the **Federal Register** on February 1, 2010 (75 FR 5009). The comment period closed on April 2, 2010. MSHA received comments from mining associations; mining companies; manufacturers; and state, federal, and international governments.

Comments received in response to the RFI addressed specific questions regarding function, application, training, costs, and benefits of proximity detection systems to reduce the risk of accidents. Some commenters stated that proximity detection systems are beneficial and can prevent pinning, crushing, and striking accidents. Commenters stated that conditions in the mining environment, including blocked visibility and limited space, or simply the lack of sight due to limited light, can cause an accident and that the only way to address these hazards is to equip mining vehicles with a proximity detection system. A commenter stated that, when it comes to safety, engineering barriers are sometimes required when the behavior of everyone, whether due to the lack of training or taking shortcuts, cannot be relied on. Several commenters stated that the technology needs further development and testing.

RFI comments related to specific provisions of the proposed rule are addressed in the section-by-section analysis later in this preamble.

In April 2010, MSHA observed the use of proximity detection systems in three underground mines in the Republic of South Africa (South Africa), demonstrating successful use of this technology. One of the mines visited began testing a proximity detection system in 2008 and, at the time of the MSHA visit, had equipped the mobile machines with the system on three sections in an underground coal mine. This mine used the proximity detection system on remote controlled continuous mining machines, shuttle cars, roof bolting machines, feeder breakers, and scoops.

One system observed in South Africa, not used in the United States, used multiple technologies: Very low frequency (VLF) electromagnetic technology in combination with ultra-high frequency (UHF) radio frequency identification (RFID) and a 2.4 gigahertz (GHz) radar system. The VLF electromagnetic system provided great accuracy at close distances for slower moving machines. The UHF RFID system provided greater range for faster moving machines. The radar system provided an object detection system, which communicated with the other two systems to validate potential danger.

There are four proximity detection systems approved under existing regulations for permissibility in 30 CFR part 18. These approvals are intended to ensure that the systems will not introduce an ignition hazard when operated in potentially explosive atmospheres. MSHA's approval regulations under 30 CFR part 18 do not address how systems will perform in reducing pinning, crushing, or striking hazards. Two of these systems have been installed on coal hauling machines and scoops.

The four MSHA-approved proximity detection systems operate using electromagnetic technology and require a miner to wear a component. A microprocessor sends a signal to activate a warning signal or stop machine movement when a miner wearing the component is within a distance pre-set for the machine and mine conditions.

In September 2011, MSHA observed two coal hauling machines equipped with an MSHA-approved proximity detection system being used in an underground coal mine in the United States. MSHA observed the systems provide appropriate activation of warning signals and stop the coal hauling machines. MSHA also observed the coal hauling machines and continuous mining machines equipped with proximity detection systems function properly to protect miners equipped with miner-wearable components.

In June 2013, MSHA observed an MSHA-approved proximity detection system on a coal hauling machine and on a scoop at an underground coal mine in the United States. MSHA observed the system activate a warning signal and stop the machines as designed.

MSHA monitors the installation and development of proximity detection systems to maintain up-to-date information on the number and capabilities of systems in use. MSHA estimates that, as of January 2015, there were 583 machines in underground coal mines in the United States equipped with proximity detection systems. Equipped machines include continuous mining machines, scoops, coal hauling machines, a loading machine, a feeder breaker, and a roof bolting machine. MSHA accident data supports a proposed rule that applies to coal hauling machines (shuttle cars, ram cars, and continuous haulage systems) and scoops. At this time, MSHA does not have accident data that justifies applying the proposed requirements to other mobile machines on the working section, such as roof bolting machines.

MSHA published a final rule on Proximity Detection Systems for Continuous Mining Machines in Underground Coal Mines on January 15, 2015 (80 FR 2188). The final rule addressed equipping continuous mining machines with proximity detection systems, phased in over 8 to 36 months, and is separate from this rulemaking.

MSHA developed this proposed rule on proximity detection systems for mobile machines in underground mines to be comparable to the requirements for proximity detection systems on continuous mining machines. MSHA intends that this proposed rule would take advantage of existing proven technology, to minimize the burden on mine operators, and allow for advances in proximity detection technology. Additional information on proximity detection systems and technology is available on the NIOSH's Web page at *http://www.cdc.gov/niosh/mining/topics/ProximityDetection.html.*

MSHA solicits information and data on the advantages and disadvantages of applying proximity detection systems on mobile machines in underground metal and nonmetal mines.

II. Section-by-Section Analysis

A. § 75.1733(a) Machines Covered

Proposed § 75.1733(a) would require underground coal mine operators to equip coal hauling machines and scoops on working sections, except longwall working sections, with the machine-mounted components of a proximity detection system in accordance with the proposed phase-in schedule. At this time, all MSHA-approved proximity detection systems include a miner-wearable component. Together, the

machine-mounted components and any miner-wearable components make up the proximity detection system. This proposed rule would also accommodate possible future technologies that may not require a miner-wearable component.

For MSHA-approved proximity detection systems with miner-wearable components, the proposed rule would require the mine operator to provide a miner-wearable component to be worn by each miner on the working section, except longwall working sections. The proposal would apply to coal hauling machines and scoops on working sections using continuous mining machines, including full-face continuous mining machines, or using conventional mining methods. The proposal would apply to production and maintenance shifts.

A commenter, in response to the RFI, stated that MSHA's approval process does not include an evaluation of the systems' functional readiness to perform in the underground mine environment. This commenter indicated that only a handful of mines have operational experience with approved systems and that a thorough examination of the operational readiness of these systems must be undertaken to address safety issues before they are required. Several other commenters stated that proximity detection systems have not proven reliable and that more testing is needed.

A representative of a South African mining company that uses a proximity detection system on continuous mining machines, shuttle cars, scoops, roof bolting machines, and feeder breakers, stated in comments to the RFI that the system is reliable. This South African mining company reported that it did not have a single reliability problem over a period of 18 months.

A proximity detection system manufacturer stated that its proximity detection system is installed on many types of underground mobile machines in Canada and Australia and that there has not been a serious injury or fatality reported on any machine using its proximity detection system. Another commenter stated that applying proximity detection systems to all mobile machines should be a long-term goal that could provide safety benefits.

Coal hauling machines include shuttle cars, diesel- and battery-powered ram cars, and continuous haulage systems. Scoops in underground coal mines include both diesel-powered and electrical-powered scoops. Mobile machines travel through narrow entryways at faster speeds than continuous mining machines. Miners work and travel in the same narrow entryways and the on-board machine operators have limited visibility of the area around the machine. Coal hauling machines also travel through ventilation curtains where they can encounter miners without warning. Continuous haulage systems include mobile bridge conveyors or carriers and flexible conveyor trains. Continuous haulage systems consist of two or more mobile units. When a continuous haulage system is used to transport coal to the conveyor, MSHA considers the working section to be all areas of the mine from the loading point to and including the working faces. These machines are long and extend beyond the visual range of the machine operator. Miners on working sections using continuous haulage systems can be near the systems without the machine operators' knowledge and can be pinned, crushed, or struck.

MSHA has determined that miners are exposed to pinning, crushing, and striking hazards when working near these machines in underground coal mines, and that working near these machines on the working section has resulted in a significant number of injuries and fatalities. A proximity detection system could have prevented 42 pinning, crushing, or striking fatalities on these machines from 1984 through 2014 (since the miners were located in a proximity detection system warning/stopping zone), which occurred on working sections: 31 associated with coal hauling machines and 11 associated with scoops. (See Table 1.) Use of proximity detection systems could have prevented these accidents by stopping machine movement before miners were pinned, crushed, or struck by the machine.

TABLE 1—NUMBER OF UNDERGROUND COAL MINE PREVENTABLE INJURIES/FATALITIES ON THE WORKING SECTION (1984–2014) BY MACHINE TYPE

Machine type	Injuries	Fatalities
Coal Hauling Machines	123	31
Scoops	56	11
Total	179	42

Note: Of these 42 fatalities, nine occurred from 2010 through 2014. Four of those fatalities occurred in 2013 and 2014: two involving coal hauling machines and two involving scoops.

MSHA would consider alternative technologies that might provide protection from pinning, crushing, or striking hazards at least equivalent to that provided by proximity detection systems. MSHA requests that commenters include specific information on alternatives, rationale for suggested alternatives, safety benefits to miners, costs of implementation, technological and economic feasibility considerations, and supporting data.

1. Exceptions

The proposal would exclude longwall working sections. In MSHA's experience, coal hauling machines and scoops are not routinely used on longwall working sections. The working section includes all areas of the coal mine from the loading point of the section to and including the working faces.

MSHA solicits information and data addressing whether scoops or coal haulage machines cause a hazard to miners on longwall working sections such that they may require the use of proximity detection. MSHA requests that commenters include specific information on rationale for not excluding longwall working sections, safety benefits to miners, costs of implementation, technological and economic feasibility considerations, and supporting data.

MSHA is aware that some machines operate both on and off the working section and that some machines are only used off the working section. The proposal would require mine operators to equip only coal hauling machines and scoops used on the working section with the machine-mounted components of a proximity detection system. From 1984 through 2014, however, two fatal accidents involving scoops occurred off working sections. MSHA is not aware of a fatal accident involving a coal hauling machine traveling off a working section. In addition, 13 nonfatal accidents occurred off working sections (two involving coal hauling machines and 11 involving scoops) and 16 occurred in an unknown location (one involving a coal hauling machine and 15 involving scoops).

MSHA solicits comments on whether the proposed requirements should apply to any mobile machines, other than coal hauling machines and scoops, in use on or off the working section. MSHA also solicits comments on whether the proposed requirements should apply to coal hauling machines and scoops in use off the working section. MSHA requests that commenters include specific information on their rationale, safety benefits to miners, costs of implementation, technological and economic feasibility considerations, and supporting data.

2. MSHA-Approved Proximity Detection Systems

The three methods to obtain MSHA approval to add the machine-mounted components of a proximity detection system to a machine are as follows:

(1) A machine manufacturer can apply for a Revised Approval Modification Program (RAMP) approval.

(2) A mine operator can apply to the Approval and Certification Center (A&CC) for a field modification.

(3) A mine operator can notify the MSHA district manager through a district field change application for electric machines.

MSHA offers an optional Proximity Detection Acceptance (PDA) program which allows a proximity detection system manufacturer to obtain MSHA acceptance for a proximity detection system. This acceptance states that the proximity detection system has been evaluated under 30 CFR part 18 and is suitable for incorporation on an MSHA-approved machine. It permits the manufacturer or owner of a machine to add the proximity detection system to a machine by requesting MSHA to add the acceptance number (PDA Number) to the machine approval under one of three methods listed above.

MSHA has approved four proximity detection systems under existing regulations for permissibility in 30 CFR part 18 for use on continuous mining machines. Two of these approved systems have been installed on coal hauling machines or scoops.

As of January 2015, there were 79 coal hauling machines and 50 scoops equipped with a proximity detection system in use in underground coal mines in the United States. Proximity detection was adapted for use on coal hauling machines and scoops by adjusting the field generator configuration to create appropriately sized zones and by changing the method for stopping machine movement. For example, a proximity detection system may be configured, as needed, to de-energize the pump motor to stop continuous haulage machine movement while a system installed on a shuttle car may be configured to apply brakes.

MSHA is aware that a manufacturer has installed machine-mounted components on a continuous haulage system and that the manufacturer has demonstrated its performance to a mine operator. MSHA has not observed the operation of a proximity detection system installed on a continuous haulage system in an underground mine. MSHA anticipates challenges with adapting proximity detection systems to continuous haulage systems due to the length of these machines and the unique interaction with continuous mining machines.

MSHA solicits comments on other types of mobile machines that should be required to be equipped with proximity detection systems. MSHA specifically solicits comments on circumstances where it may be appropriate to require loading machines, roof bolting machines, and feeder breakers to be equipped with a proximity detection system. Comments should provide specific information on rationale for requiring other types of mobile machines to be equipped with proximity detection systems, safety benefits to miners, technological and economic feasibility considerations, and supporting data.

Each proximity detection system currently approved by MSHA for use in underground coal mines in the United States uses miner-wearable components. These systems cannot protect any miner who is not wearing a miner-wearable component.

Miners on the working section often work near coal hauling machines and scoops. Each miner on a working section can be exposed to pinning, crushing, or striking hazards from these machines and would need to wear a miner-wearable component for protection. The proposal would require the mine operator to provide a miner-wearable component to be worn by each miner on the working section, except longwall working sections. A working section is defined in existing § 75.2 as all areas of the coal mine from the loading point of the section up to and including the working faces.

To assess the costs of the proposed rule, MSHA estimated that there are seven miners per working section. In addition, other persons may visit the working section on occasion, such as dust samplers, surveyors, electricians, or mine examiners, and would need a miner-wearable component.

MSHA solicits comments on the numbers of persons who may be on the working section during a single shift. Comments should be specific and include alternatives, rationale for suggested alternatives, safety benefits to miners, technological and economic feasibility considerations, and supporting data.

3. Proposed Phase-In Schedule for Proximity Detection Systems on Coal Hauling Machines and Scoops

Proposed § 75.1733(a) would phase in the use of proximity detection systems according to the following schedule.

Proposed § 75.1733(a)(1) would require coal hauling machines and scoops manufactured after the effective date of a final rule to meet the rule's requirements no later than 8 months after the effective date of the final rule. These machines would need to meet the requirements in this section when placed in service with a proximity detection system. The Agency intends that a machine is placed in service when the machine equipped with a proximity detection system is placed in the underground coal mine.

Proposed § 75.1733(a)(2) would require coal hauling machines or scoops manufactured and equipped with a proximity detection system on or before the effective date of a final rule to meet the rule's requirements no later than 8 months after the effective date of the final rule when modifications to the existing proximity detection system can be made underground; or 36 months after the effective date of the final rule when the existing proximity detection system cannot be modified underground or needs to be replaced with a new proximity detection system.

Proposed § 75.1733(a)(3) would require coal hauling machines and scoops manufactured and not equipped with a proximity detection system on or before the effective date of a final rule to meet the rule's requirements no later than 36 months after the effective date of the final rule. These machines would need to meet the requirements in this section when placed in service with a proximity detection system.

Several commenters on the RFI recommended that MSHA consider a phase-in approach with separate compliance dates addressing new equipment, rebuilt equipment, and equipment in service. One commenter encouraged MSHA to proceed cautiously and to provide the time required to assure the development of reliable and effective systems. Another commenter stated that machines should be retrofitted with proximity detection systems in a shop or during rebuild.

The proposed phase-in schedule would provide an appropriate amount of time for manufacturers to produce proximity detection systems; for manufacturers and mine operators to install proximity detection systems on newly manufactured machines or modify in-service proximity detection systems and machines; and for mine operators to install proximity detection systems on machines not equipped by the effective date of a final rule.

In determining the schedule, MSHA considered the availability of MSHA-approved proximity detection systems, the estimated number of machines that would be replaced by newly manufactured machines during this

period, manufacturers' capacity to produce and install systems for these machines, and manufacturers' and mine operators' ability to produce and install systems on existing equipment. The phase-in schedule would allow mine operators time to train their workforce on proximity detection systems.

MSHA considers the date that the machine was manufactured as the date identified on the machine or otherwise provided by the manufacturer. MSHA considers coal hauling machines and scoops to be equipped with a proximity detection system when the machine-mounted components are installed on the machine and miners are provided with the miner-wearable components.

The proposed rule would allow 8 months for mine operators to install proximity detection systems on coal hauling machines and scoops manufactured after the effective date of a final rule. These newly manufactured machines can be equipped with proximity detection systems as part of the manufacturing process. MSHA believes that this 8-month time period would allow manufacturers and mine operators sufficient time to obtain MSHA approval under existing 30 CFR parts 18 or 36 and install proximity detection systems. The proposed 8-month time period would also allow mine operators time to inform and train their workforce on proximity detection systems. MSHA believes it is important for coal hauling machines and scoops equipped with a proximity detection system to meet requirements when placed in service to assure that miners are protected from pinning, crushing, and striking hazards.

The proposed rule would allow 8 months for mine operators to make any needed modifications to proximity detection systems that were installed on coal hauling machines and scoops before the effective date of a final rule. Proximity detection systems approved and in use on coal hauling machines or scoops in underground mines have a visual warning signal on the machine-mounted component and both a visual and audible warning signal on the miner-wearable component. These systems might require modification of the proximity detection warning signals to make them distinguishable from other signals. MSHA believes that these modifications could be done underground during a maintenance shift. Allowing 8 months for these machines would also provide operators time to obtain MSHA approvals for the modifications and to provide training. MSHA estimates that, as of January 2015, at least 79 coal hauling machines and 50 scoops in use in underground coal mines have been equipped with a proximity detection system.

The proposed rule would allow 36 months for mine operators to install proximity detection systems on coal hauling machines and scoops manufactured and not equipped with a proximity detection system on or before the effective date of a final rule. This time period would allow mine operators time to schedule installations during planned rebuilds or scheduled maintenance and to train their workforce on proximity detection systems. MSHA believes it is important for coal hauling machines and scoops equipped with a proximity detection system to meet requirements when placed in service to assure that miners are protected from pinning, crushing, and striking hazards. MSHA estimates that, as of January 2015, there are 1,283 coal hauling machines and 704 scoops in service on the working sections in underground coal mines that would need to be equipped with a proximity detection system. MSHA would also provide 36 months to mine operators with mobile machines already equipped with a proximity detection system that would require the installation of a new proximity detection system or modifications to the system could not be done underground to meet the rule's requirements.

This proposed rule would also apply to diesel-powered coal hauling machines and scoops on the working section. MSHA is unaware of any permissible diesel-powered machines equipped with proximity detection systems in the United States. MSHA anticipates challenges with installing proximity detection systems on diesel-powered machines due to the additional modifications required to the mechanical systems.

MSHA acknowledges that it will take time to obtain MSHA approvals to equip coal hauling machines and scoops with proximity detection systems. MSHA must approve miner-wearable components and electrical machines equipped with proximity detection systems as permissible equipment under existing regulations in 30 CFR part 18. Diesel-powered machines must be approved under existing regulations in 30 CFR part 36.

MSHA solicits comments on the proposed phase-in schedules. MSHA also solicits comments on what, if any, modifications may be needed on mobile machines already equipped with proximity detection systems. MSHA also solicits comments on whether the modifications could be made underground, and whether there are any issues that may impact the proposed phase-in schedules. Comments should be specific and include alternatives, rationale for suggested alternatives, safety benefits to miners, technological and economic feasibility considerations, and supporting data.

4. Training Requirements for Miners Working Near Machines Equipped With Proximity Detection Systems

In response to the RFI, some commenters stated that miners will need task training when machines are equipped with a proximity detection system. As the proximity detection systems are phased in, mine operators would be required to provide miners with new task training under existing part 48. MSHA intends that mine operators would address safety issues that might arise during the proposed phase-in schedule, such as some machines being equipped with proximity detection systems while others are not, through existing new task training requirements, with an emphasis on basic safety rules and practices. MSHA believes that as mobile machines are equipped with proximity detection there will be an added layer of safety to the basic safety rules and practices, assuring that the risk of injury would not increase during the phase-in period.

Miners working near mobile machines equipped with proximity detection systems would engage in different and unfamiliar machine operating procedures resulting from new work positions, machine movements, and new visual or auditory signals. Existing § 48.7(a) requires that miners assigned to new work tasks as mobile equipment operators not perform new work tasks until training has been completed. As required under existing § 48.7(a)(3) for new or modified machines and equipment, equipment and machine operators must be instructed in safe operating procedures applicable to new or modified machines or equipment to be installed or put into operation in the mine, which require new or different operating procedures. In addition, existing § 48.7(c) requires miners assigned a new task not covered in existing § 48.7(a) be instructed in the safety and health aspects and safe work procedures of the task prior to performing such task.

Mine operators would be required to provide new task and equipment training on the proper functioning of the proximity detection system before requiring miners to operate or work near a machine equipped with a proximity detection system. New task training (which is separate from new miner training under existing § 48.5 and annual refresher training under existing

§ 48.8) must occur before miners operate machines equipped with a proximity detection system. New task training helps assure that miners have the necessary skills to perform new tasks prior to assuming responsibility for the tasks. Mine operators should assure that this training includes hands-on training during supervised non-production activities. The hands-on training allows miners to experience how the systems work and to locate the appropriate work positions around machines. Based on Agency experience, the hands-on training is most effective when provided in miners' work locations.

MSHA solicits comments on the proposed training for miners who operate or work near machines equipped with proximity detection systems. Comments should address the type, frequency, and content of training in addition to which miners should be trained. Comments should be specific and include alternatives, rationale for suggested alternatives, safety benefits to miners, technological and economic feasibility considerations, and supporting data.

5. Request for Comments on Requiring Proximity Detection Systems on Mobile Machines in Underground Metal and Nonmetal Mines

Metal and nonmetal mine operators would not be required to equip machines with proximity detection systems under this proposal. In response to the RFI, some commenters suggested that proximity detection systems should not be required in underground stone mines. These commenters stated that they were not aware of pinning, crushing, or striking accidents in underground stone mines that might have been prevented by proximity detection systems. One commenter stated that applying proximity detection technology to the equipment used in underground stone mines would not serve to reduce the risk of injuries and fatalities. Two commenters stated that underground stone miners work in enclosed cabs and are not exposed to the hazards presented by remote controlled equipment. Three commenters stated that an electromagnetic field from a proximity detection system could set off electric detonators used in underground stone mines. Two commenters also stated that proximity detection systems had not been tested on equipment in underground metal and nonmetal mines.

MSHA has analyzed data on pinning, crushing, and striking accidents in underground metal and nonmetal mines, and related equipment. MSHA estimates that, based on the Agency's most recent analysis, there are 66 continuous mining machines, 80 shuttle cars, and 1,371 scoops, loaders, load-haul-dumps, and mucking machines used in underground metal and nonmetal mines. Since 1984, five fatalities have occurred in underground metal and nonmetal mines where the use of a proximity detection system could have prevented the accident (since these miners were found in a proximity detection system warning/stopping zone): one involving a continuous mining machine and four involving a scoop, loader, load-haul-dump machine, or mucking machine.

Generally, mining conditions in underground metal and nonmetal mines are not the same as conditions in underground coal mines. Differences include wider and higher entries, which improve visibility and allow more room for miners to work around the equipment. The Agency's experience with use of proximity detection systems in the United States has focused on underground coal mines. Therefore, in response to comments to the RFI and the less frequent occurrence of crushing, striking, and pinning accidents in underground metal and nonmetal mines, the proposed requirements are limited to underground coal mines.

MSHA solicits comments on whether the Agency should require proximity detection systems on machines used in underground metal and nonmetal mines, and if so, which types of machines and in what timeframes. Comments should be specific and include alternatives, rationale for suggested alternatives, safety benefits to miners, technological and economic feasibility considerations, and supporting data.

6. Request for Comments on Requiring Miners To Wear Reflective Clothing in Underground Coal and Metal and Nonmetal Mines

MSHA is also considering a requirement that miners in underground mines wear reflective material in order to reduce the hazards associated with poor visibility. Existing § 75.1719–4(d) requires that each person who goes underground in a coal mine wear a hard hat or hard cap with a minimum of six square inches of reflecting tape or equivalent paint or material on each side and back. Metal and nonmetal mines do not have a similar requirement. In MSHA's experience, however, many miners in underground coal and metal and nonmetal mines also wear clothing with reflective material. One of the recommendations in MSHA's 2010 safety initiative, *Safety Practices around Shuttle Cars and Scoops in Underground Coal Mines,* was that ''Miners should always wear reflective clothing so that they can be clearly seen by the shuttle car and scoop drivers.''

MSHA solicits comments on whether the Agency should require that miners wear reflective material to make them more visible to equipment operators and, if so, how much and where. Comments should be specific and include alternatives, rationale for suggested alternatives, safety benefits to miners, feasibility considerations, and supporting data.

B. § 75.1733(b) Requirements for Proximity Detection Systems

Proposed § 75.1733(b)(1) would require that a proximity detection system cause a machine to stop before contacting a miner except for a miner who is in the on-board operator's compartment. This proposed requirement would apply to coal hauling machines and scoops on the working section to prevent pinning, crushing, or striking accidents. MSHA intends that the proximity detection system would stop all movement of the machine, such as tramming, conveyor chain movement, and raising or lowering the bucket of a scoop that could cause the machine to contact a miner. The machine would remain stopped while any miner is within a programmed stop zone.

In the RFI, MSHA asked for comments on the size and shape of the area around machines that a proximity detection system monitors and how systems can be programmed and installed to provide different zones of protection depending on machine function. Some commenters stated that an effective proximity detection system should cause the machine to stop before a miner enters the hazardous area around the machine. Several commenters suggested that protection zones should be largest when tramming and that reduced protection zones are needed for certain mining operations.

Some commenters stated that zone size should be determined using a risk assessment considering the speed at which the proximity detection system can alert the operator, the reaction time of the operator, and the number of people in the working area. Another commenter stated that work practices vary among mines so that one specified zone may not work for all mines.

In its comments on the RFI, NIOSH stated that the goal of a proximity detection system should be to prevent machine actions or situations that injure workers while not placing restrictions on how the workers do their jobs.

NIOSH also stated that the total time required for performing proximity detection system functions, plus a safety factor, should be used to define the size of detection zones around machines. NIOSH stated that the total time required includes: (1) Detection of a potential victim; (2) decision processing to determine if a collision-avoidance function is needed; (3) initiation of the collision-avoidance function; and (4) implementation of the collision-avoidance function. NIOSH stated that any rule should be performance-based.

MSHA's experience with proximity detection systems indicates that causing a machine to stop before contacting a miner would provide appropriate protection to prevent pinning, crushing, and striking accidents. Machines traveling at faster speeds generally need more time to stop. MSHA has observed proximity detection systems that are designed to slow a machine before causing it to stop. A performance-based approach would allow mine operators and manufacturers to address mine- and machine-specific conditions when determining the appropriate settings for a proximity detection system. Performance-based requirements focus on attaining objectives, such as stopping a machine before contacting a miner, rather than being prescriptive in how the result is achieved, such as stopping within a specified distance. Mine- and machine-specific conditions could include steep or slippery roadways, tramming speed of machinery, location of the miner-wearable component, and the accuracy of the proximity detection system. Mine operators would be responsible for programming a proximity detection system to initiate the stop-movement function so that the machine stops before contacting a miner.

MSHA solicits comments on whether to require a proximity detection system to cause the machine to slow before causing it to stop and, if so, what requirement would be appropriate. MSHA also solicits comments on effective methods or controls, working in conjunction with the proximity detection system, to protect the on-board operator from sudden stops. MSHA also requests comments on what types of machine movement the proximity detection system should stop, beyond movement related to tramming coal hauling machines and scoops. Comments addressing these issues should be specific, and include alternatives, rationale for suggested alternatives, safety benefits to miners, technological and economic feasibility considerations, and supporting data.

During MSHA's visit to South Africa, staff observed that one mine operator designed its proximity detection systems to stop scoops eight feet from a miner and to stop shuttle cars six feet from a miner. Prior to the introduction of proximity detection systems at their mines, the company's policy was that miners must maintain a minimum distance of one meter (approximately three feet) from all operating mobile machines. MSHA considered proposing a prescriptive requirement that would specify that a machine must stop no closer than three feet from a miner. MSHA also considered proposing other specific stopping distances, *e.g.,* six feet from a miner, but decided on a performance-based approach.

MSHA solicits comments on whether a performance-based approach would be appropriate. Comments should be specific, and include alternatives, rationale for suggested alternatives, safety benefits to miners, technological and economic feasibility considerations, and supporting data.

The interaction of multiple machine types equipped with proximity detection systems is likely to cause changes in work practices. These changes would affect where miners are positioned near machines and routes that machines travel. For example, continuous mining machines and coal hauling machines must get close, and often touch, during the transfer of material from one machine to the other. When a coal hauling machine equipped with a proximity detection system gets near a continuous mining machine with a proximity detection system, the overlap of the two protection zones may limit where miners may position themselves (1) to remain safe, (2) avoid activation of warning signals, or (3) avoid unintentionally stopping the machines.

MSHA solicits comments on how the use of proximity detection systems and the overlap of protection zones on multiple types of machines operating on the same working section might affect miners' work positions, such as a continuous mining machine operator who may need to work close to the continuous mining machine when cutting coal or rock. Comments should be specific, and include alternatives, rationale for suggested alternatives, safety benefits to miners, technological and economic feasibility considerations, and supporting data.

Proposed § 75.1733(b)(1) would provide an exception for a miner who is in an on-board operator's compartment. Machines with an on-board operator would not function if the proximity detection system prevents machine movement when a miner is on the machine. The proposed rule would require machines to stop before contacting any miner not in the operator's compartment.

MSHA observed that, in South Africa, the continuous mining machine operator was provided a smaller protection zone around the shuttle car than for other miners. This allowed the continuous mining machine operator to be closer to the shuttle car when it got near the continuous mining machine for loading. The proximity detection system on the shuttle car caused the machine to slow down as it neared the continuous mining machine operator, reducing the pinning, crushing, or striking hazard. Similarly, an underground coal mine operator in the United States, working with a proximity detection system manufacturer, developed a system which would stop a coal hauling machine when it got within approximately ten feet of a miner. However, the continuous mining machine operator can press a button on the miner-wearable component and allow the coal hauling machine to slowly approach the continuous mining machine.

Commenters to the RFI generally stated that machines with an on-board operator's compartment should have a proximity detection system that allows machines to function when the operator is in the operator's compartment. One commenter stated that a proximity detection system can include exclusion zones to allow mobile machines to move while a miner is in the exclusion zone but still protect other miners.

Some coal hauling machines and scoops may be used to transport mine personnel if certain safeguards are in place. (MSHA Program Policy Manual, Vol. V—Coal Mines, Criteria—Mantrips, October 2003 (Release V–34), pp. 126–127.) Under the proposed rule, a coal hauling machine or scoop equipped with a proximity detection system that is being used to transport mine personnel would not operate if miners wore their miner-wearable components. Both the coal hauling machine or scoop being used to transport miners and the miners being transported, however, would have to be equipped with a properly functioning proximity detection component before they enter the working section. Under one possible scenario, the coal hauling machine or scoop could stop to allow miners to get off before it continues onto the working section. Miners could then don a miner-wearable component before entering the working section.

MSHA solicits comments on the exclusion zone for the on-board

operator. MSHA also requests information on issues related to the use of coal hauling machines or scoops, equipped with proximity detection systems, to transport miners to the working section. Comments should be specific, and include alternatives, rationale for suggested alternatives, safety benefits to miners, technological and economic feasibility considerations, and supporting data.

Proposed § 75.1733(b)(2) would require the proximity detection system to provide warning signals, distinguishable from other signals, that alert miners before the system causes a machine to stop: an audible and visual warning signal on any miner-wearable component and a visual warning signal on the machine.

In the RFI, MSHA asked for information on the most effective protection that proximity detection systems could provide. In response, some commenters stated that a proximity detection system should include a warning prior to causing the machine to stop movement. One commenter stated that proximity detection systems should include a range of escalating alerts depending on the proximity to a hazard.

MSHA-approved proximity detection systems alert miners before causing machine movement to stop. The proposal would require audible and visual warning signals on any miner-wearable component and a visual warning signal on the machine before the system causes the machine to stop. The audible and visual warnings provided by miner-wearable components allow the miner wearing the component to move away from the machine before the proximity detection system causes the machine to stop. The visual warning provided on the machine would be required to alert the on-board operator.

Two proximity detection systems currently approved for use on mobile machines in the United States provide an audible and visual warning signal from a miner-wearable component and a visual warning signal from the machine before causing a machine to stop. In MSHA's experience, providing warning signals before causing the machine to stop provides a margin of safety to allow a miner near the moving machine an opportunity to be proactive and move away from the machine to avoid danger.

MSHA solicits comments on the proposed requirement that the proximity detection system provide audible and visual warning signals on miner-wearable components and a visual warning signal on the mobile machines. Early research suggests that providing warnings at varying distances may be appropriate dependent on the machine speed. (Sanders and Kelly, 1981.) Machine operators often need to redirect their attention from the front to the rear of the machine, and in some cases, must switch seats when changing directions. As a result, a visual warning signal on the machine may not always be in the operator's direct line of sight.

MSHA solicits comments on whether requiring audible warning signals in addition to visual warning signals on the machine would help assure that miners, including the machine operator, know that a miner is in the warning zone and the machine is about to stop. MSHA also solicits comments on whether requiring the use of a specific visual warning on the machine, *e.g.*, strobe lights, clustered light-emitting diode (LED) lights, or other types of visual signals, would help assure that the visual warning alerts miners near the machine, including the machine operator. Comments should be specific and include alternatives, rationale for suggested alternatives, address how the alternatives would practically and effectively be implemented, safety benefits to miners, technological and economic feasibility considerations, and supporting data.

Proposed § 75.1733(b)(3) would require that a proximity detection system provide a visual signal on the machine that indicates the machine-mounted components are functioning properly.

Commenters, in response to the RFI, generally stated that a proximity detection system should include system diagnostics and indicate that the system is functioning properly. In its comments on the RFI, NIOSH stated that each proximity detection system should perform self-diagnostics to identify software or hardware problems.

In MSHA's experience, proximity detection systems used on coal hauling machines and scoops provide a visual signal to indicate the system is functioning properly. This provides an added margin of safety and is consistent with standard safety practices. The visual signal allows miners to readily determine that a proximity detection system is functioning properly. MSHA believes that an unobstructed visual signal is preferable to an audible signal for providing feedback to miners because a visual signal cannot be obscured by surrounding noise. An LED may be an acceptable visual signal.

MSHA considers the proximity detection system to be functioning properly when the system is working as designed and will cause the machine to stop before contacting a miner; provide audible and visual warning signals, distinguishable from other signals, that alert miners, including the machine operator, before causing the machine to stop; provide the required warning signals on the machine; and prevent movement of the machine, except for purposes of repair, if any machine-mounted component is not working as intended.

MSHA solicits comments on the proposed requirement. Comments should be specific and include alternatives, rationale for suggested alternatives, safety benefits to miners, technological and economic feasibility considerations, and supporting data.

Proposed § 75.1733(b)(4) would require that a proximity detection system prevent movement of the machine if any machine-mounted component of the system is not functioning properly. However, a system may allow machine movement if an audible or visual warning signal, distinguishable from other signals, is provided during movement. Such movement would be permitted only for purposes of relocating the machine from a location that is unsafe for the miner conducting repairs.

Commenters in response to the RFI had different opinions on whether MSHA should permit an operator to override the shutdown feature of a proximity detection system to allow machine movement in a particular circumstance. One commenter stated that a proximity detection system must provide a continuous self-check capability so that if the system is not functioning properly, the machine cannot be operated. This same commenter stated that only an appointed person should have the authority to override a proximity detection system. Several commenters stated that a proximity detection system should allow for temporary deactivation, such as an emergency override, in case a system is not functioning properly while a machine is under unsupported roof. Another commenter, however, stated that a proximity detection system should not have an override feature.

MSHA intends that proximity detection systems would prevent all machine movement if any machine-mounted component is not functioning properly. This prevention of movement includes tramming, conveyor chain movement, raising or lowering the bucket of a scoop, and any movements that could cause the machine to contact a miner. A coal hauling machine or scoop equipped with a proximity detection system that is malfunctioning

could expose miners to pinning, crushing, and striking hazards. When any machine-mounted component of the system is not functioning properly, preventing all machine movement helps to assure that miners are protected.

The proposed rule would allow the machine's proximity detection system to be overridden or bypassed to move the machine from an unsafe location to protect miners. Overriding or bypassing the proximity detection system should only occur for the time necessary to move the machine to a safe repair location. The proposed provision to allow the machine to be moved would require an audible or visual warning signal during the movement. In MSHA's experience, either type of warning signal is sufficient to warn miners that the machine-mounted component of the proximity detection system is not functioning properly.

MSHA solicits comments on the proposed requirements. MSHA requests comments addressing whether requiring both an audible and visual warning signal is needed to assure that all miners on the working section know that the machine-mounted component is not functioning properly. Comments should be specific and include alternatives, rationale for suggested alternatives, safety benefits to miners, technological and economic feasibility considerations, and supporting data.

Proposed § 75.1733(b)(5) would require that a proximity detection system be installed to prevent interference that adversely affects performance of any electrical system.

Some commenters in response to the RFI stated that interference of proximity detection systems with other mine electrical systems is a concern. However, manufacturers of the approved proximity detection systems stated that their systems do not have interference issues. A commenter stated that electromagnetic interference may prevent these systems from providing complete protection to miners. Several commenters stated that systems must be designed and tested for possible and known sources of interference before a requirement for proximity detection is issued. A commenter expressed concern that a proximity detection system may detonate explosives due to electromagnetic field interference.

Electrical systems used in the mine, including proximity detection systems, can adversely affect the function of other electrical systems through the generation of electromagnetic interference, which includes radio frequency interference. MSHA has not received reports of adverse interference, with or from other electrical systems, associated with the approximately 583 proximity detection systems in use in underground coal mines. However, there have been instances of adverse performance of a remote controlled system, an atmospheric monitoring system, and a machine-mounted methane monitoring system when a hand-held radio was in use near the affected systems. Electromagnetic output of approved proximity detection systemsis substantially lower and uses different frequencies than other mine electrical systems, such as communication and atmospheric monitoring systems. It is less likely for a proximity detection system to encounter interference, even in low seam mines. Under the proposal, the mine operator would be required to evaluate a proximity detection system used on coal hauling machines and scoops for interference that adversely affects other electrical systems, including blasting circuits and other proximity detection systems, in the mine and take adequate steps to prevent adverse interference. Steps could include design considerations, such as the addition of shielding, or providing adequate separation between electrical systems.

MSHA solicits comments on the proposed requirement that a proximity detection system be installed in a manner that prevents interference that adversely affects performance of any electrical system. MSHA also solicits comments on any experience or issues related to the use of proximity detection systems from different manufacturers on the same working section. MSHA requests comments on any experience or issues related to the use of a single miner-wearable component with proximity detection systems from different manufacturers or with different models from the same manufacturer. Comments should be specific and include alternatives, rationale for suggested alternatives, safety benefits to miners, technological and economic feasibility considerations, and supporting data.

Proposed § 75.1733(b)(6) would require that a proximity detection system be installed and maintained in proper operating condition by a person trained in the installation and maintenance of the system.

A commenter in response to the RFI stated that maintenance personnel and machine operators will need training to assure that they understand how the proximity detection system functions and any maintenance requirements. This commenter also stated that proper installation of a proximity detection system is critical for reliable performance. Another commenter said that a few hours of classroom instruction and approximately one hour of underground training for machine operators has proven adequate and that maintenance training requires about four hours.

Based on MSHA's experience with proximity detection systems, proper functioning of a proximity detection system is directly related to the quality of the installation and maintenance of the system. This proposed training requirement for installing and maintaining a proximity detection system is in addition to training required under existing 30 CFR part 48. The new training requirement would help assure that the person performing installation and maintenance of a proximity detection system understands the system and can perform the work necessary to assure that the system operates properly. Appropriate training could include adjusting detection zones, trouble-shooting electrical connections, and replacing and adjusting machine-mounted and miner-wearable components.

MSHA anticipates that mine operators would assign miners to perform most maintenance activities, but representatives of the manufacturer may perform some maintenance. Based on Agency experience, mine operators would generally arrange for proximity detection system manufacturers to provide appropriate training to miners for installation and maintenance. Miners receiving training from manufacturers' representatives would, in most cases, provide training for other miners who may undertake installation and maintenance duties at the mine. In MSHA's experience, many mines use the train-the-trainer concept for installation and maintenance activities related to certain mining equipment.

A system must operate properly to protect miners near the machine. This includes the machine-mounted components and the miner-wearable components. MSHA would expect the mine operator to demonstrate that a proximity detection system in use at their mine, on a coal hauling machine or scoop, is installed and maintained in proper operating condition. Mine operators could determine if the system is maintained in proper operating condition using the procedures described in the system manufacturer's instructions.

When determining whether the proximity detection system is installed and maintained in proper operating condition, the position of the miner-wearable component on the miner and the distance from the closest surface of

the machine to the miner-wearable component should be considered. Mine- and machine-specific conditions, including steep or slippery roadways, tramming speed of machinery, location of the miner-wearable component, and the accuracy of the proximity detection system, should also be considered.

MSHA solicits comments on mine operators' experiences with maintaining proximity detection systems in proper operating condition. Comments should be specific and include alternatives, rationale for suggested alternatives, safety benefits to miners, technological and economic feasibility considerations, and supporting data.

C. § 75.1733(c) Proximity Detection System Checks

Proposed § 75.1733(c) would address requirements for proximity detection system checks.

Proposed § 75.1733(c)(1) would require that mine operators designate a person to perform a check of machine-mounted components of the proximity detection system to verify that components are intact and the system is functioning properly, and to take action to correct defects: (1) Before the machine is operated at the beginning of each shift when the machine is to be used; (2) immediately prior to the time the machine is to be operated if not in use at the beginning of a shift; or (3) within one hour of a shift change if the shift change occurs without an interruption in production. For (1) and (2), MSHA anticipates that the check would occur before the machine is permitted to enter the working section.

In response to the RFI, several commenters stated that a proximity detection system should be checked at the beginning of each shift to verify that it is functioning properly. NIOSH commented that the machine operator should have a set of procedures to evaluate the system at the start of each shift.

The person designated to perform the check would verify that machine-mounted components are intact and the system is functioning properly. Machine-mounted components mounted on the outer surfaces of a machine could be damaged when the machine contacts a rib or heavy material falls against the machine. The check would also include observation of appropriate audible and visual warning signals. If any defect is found, the proposal would require it to be corrected before using the machine. Correcting defects before the machine is used helps assure that the system functions properly and helps prevent miners' exposure to pinning, crushing, and striking hazards.

The check of the machine-mounted components would supplement the design requirement in proposed paragraph (b)(4) that the systems prevent movement of the machine if any machine-mounted component is not functioning properly. For example, the system may not be able to detect a displaced field generator, which could affect proper function. The check would help assure that machine-mounted components are positioned correctly and mounted properly on the machine and that the system will warn miners and stop machine movement appropriately.

Under existing § 48.7, miners who perform the required check must receive training in the health and safety aspects and safe operating procedures for work tasks, equipment, and machinery. In most cases, MSHA anticipates that the mine operator will designate the person operating a coal hauling machine or scoop to make the check of the proximity detection system.

The check in proposed § 75.1733(c)(1) would help assure that proximity detection systems function properly between the weekly examinations required under existing §§ 75.512 and 75.1914. The examination of electric machines under existing § 75.512 must include the machine-mounted components of a proximity detection system. Existing § 75.512 requires electric equipment, including the machine-mounted components of proximity detection systems, to be examined, tested, and properly maintained by a qualified person at least weekly to assure safe operating conditions. When the qualified person finds a potentially dangerous condition on electric equipment, such equipment must be removed from service until such condition is corrected. Under existing § 75.1725, mobile and stationary machinery and equipment, which includes coal hauling machines and scoops, must be maintained in safe operating condition or removed from service. In addition, existing § 75.1914(a) requires that diesel-powered equipment be maintained in approved and safe condition or removed from service. Under existing § 75.1914(f), machine-mounted components of proximity detection systems on diesel-powered machines must be examined weekly.

MSHA solicits comments on the proposed requirement. Comments should be specific and include alternatives, rationale for suggested alternatives, safety benefits to miners, technological and economic feasibility considerations, and supporting data.

Proposed § 75.1733(c)(2) would require that miner-wearable components be checked for proper operation at the beginning of each shift that the component is to be used and that defects be corrected before the components are used.

Several commenters on the RFI stated that the miner-wearable component should be checked at the beginning of each shift and that minimal training is necessary for miners to learn this task.

The proposed requirement that miner-wearable components be checked for proper operation at the beginning of each shift that the component is to be used would help assure that the miner is protected before getting near a machine. MSHA anticipates that each miner equipped with a miner-wearable component would check the component to see that it is not damaged and has sufficient power. The proximity detection systems that use these components can only function properly if the miner-wearable components have sufficient power.

MSHA intends that this check would be similar to the check that a miner performs on a cap lamp prior to the beginning of a shift. A mine operator, however, could also designate a person to check miner-wearable components before they are used. Mine operators must provide new task training, under 30 CFR part 48, for miners who will be checking the miner-wearable components. If any defect is found, the proposal would require it to be corrected before using the component. This helps assure that the miner-wearable component functions properly and helps prevent miners' exposure to pinning, crushing, and striking hazards. If a miner-wearable component malfunctions during the shift, the miner wearing the component would have to leave the section until provided with a properly functioning miner-wearable component.

MSHA solicits comments on the proposed requirements. Comments should be specific and include alternatives, rationale for suggested alternatives, safety benefits to miners, technological and economic feasibility considerations, and supporting data.

D. § 75.1733(d) Certification and Records

Proposed § 75.1733(d) would address certification and records requirements for proximity detection systems.

Proposed § 75.1733(d)(1) would require, at the completion of the check under proposed paragraph (c)(1), that a certified person under existing § 75.100

certify by initials, date, and time that the check was conducted. Defects found as a result of the check, including corrective actions and date of corrective action, would be required to be recorded.

The certification that would be required under proposed paragraph (d)(1) would help assure compliance and provide miners on the section a means to confirm that the required check under proposed (c)(1) was made. MSHA anticipates that, in most cases, the person making the certification of the on-shift examination under existing § 75.362(g)(2) would also make the certification of this check at the same time. The person making the check could communicate to a certified person that the check was performed.

The record of defects and corrective actions as a result of the check required under proposed paragraph (c)(1) of this section would be made by the completion of the shift, which is consistent with the requirements for records of hazardous conditions in existing § 75.363(b). If no defect is found, no record is needed. The requirement in proposed paragraph (d)(1) of this section would require a record of defects and corrective actions. Records of defects and corrective actions can be used to show a history of machine-mounted component defects at the mine and alert miners, representatives of miners, mine management, manufacturers, and MSHA of recurring problems and ways to address problems.

Proposed § 75.1733(d)(2) would require the operator to record defects found as a result of the check of miner-wearable components in proposed paragraph (c)(2) of this section, including corrective actions and date of corrective action. This record can be used to show a history of miner-wearable component defects that can be used to alert miners, representatives of miners, mine management, manufacturers, and MSHA of recurring problems and ways to address problems. For miner-wearable components, no record would be needed unless a defect is found. A certification of the check for proper operation of miner-wearable components that would be required under proposed paragraph (c)(2) is not necessary because miners can readily check to confirm that the component is working.

Proposed § 75.1733(d)(3) would require that the operator make and retain records of the persons trained in the installation and maintenance of proximity detection systems. MSHA anticipates that many mine operators would train qualified persons, as defined by existing § 75.153, to install and perform maintenance on proximity detections systems; but the mine operator may train another miner who is not included on the list of certified and qualified persons required by existing § 75.159. A mine operator may make this record of the persons trained using existing MSHA Form 5000–23. Consistent with existing practice, mine operators would not need to make and retain records of training for proximity detection system manufacturers' employees who install or perform maintenance on the systems.

Proposed § 75.1733(d)(4) would require that the mine operator maintain records under proposed § 75.1733(d)(1), (d)(2), and (d)(3) in a secure book or electronically in a secure computer system not susceptible to alteration. Based on MSHA's experience with other safety and health records, the Agency believes that records should be maintained so that they cannot be altered. In addition, electronic storage of information and access through computers is an increasingly common business practice in the mining industry. This proposed provision would permit the use of electronically stored records provided they are secure, are not susceptible to alteration, are able to capture the information and signatures required, and are accessible to the representative of miners and MSHA.

Care must be taken in the use of electronic records to assure that the secure computer system will not allow information to be overwritten or deleted after being entered. MSHA believes that electronic records meeting these criteria are practical and as reliable as paper records. MSHA also believes that once records are properly completed and reviewed, mine management can use them to evaluate whether the same conditions or problems, if any, are recurring, and whether corrective measures are effective. The proposal provides mine operators flexibility to maintain the records in a secure book or electronically in a secure computer system that they already use to satisfy existing recordkeeping requirements.

Proposed § 75.1733(d)(5) would require that the mine operator retain records under proposed § 75.1733(d)(1), (d)(2), and (d)(3) for at least one year and make them available for inspection by authorized representatives of the Secretary and representatives of miners. The operator may provide access electronically or by providing paper copies of records. MSHA believes that keeping records for one year provides a history of the conditions documented at the mine to alert miners, representatives of miners, mine management, manufacturers, and MSHA of recurring problems and ways to correct problems.

MSHA solicits comments on the recordkeeping requirements in proposed § 75.1733(d). Comments should be specific and include alternatives, rationale for suggested alternatives, safety benefits to miners, technological and economic feasibility considerations, and supporting data.

III. Preliminary Regulatory Economic Analysis

A. Executive Orders (E.O.) 12866 and 13563

Executive Orders 12866 and 13563 direct agencies to assess all costs and benefits of available regulatory alternatives and, if regulation is necessary, to select regulatory approaches that maximize net benefits (including potential economic, environmental, public health and safety effects, distributive impacts, and equity). Executive Order 13563 emphasizes the importance of quantifying both costs and benefits, of reducing costs, of harmonizing rules, and of promoting flexibility. To comply with these Executive Orders, MSHA has prepared a Preliminary Regulatory Economic Analysis (PREA) for the proposed rule. The PREA contains supporting data and explanation, which is summarized in this preamble, including the covered mining industry, costs and benefits, feasibility, small business impacts, and information collection requirements. The PREA can be accessed electronically at *http://www.msha.gov/REGSINF5.HTM.* A copy of the PREA can be obtained from MSHA's Office of Standards, Regulations and Variances at the address in the **ADDRESSES** section of this preamble. MSHA is seeking robust comments on the validity of the Agency's costs and benefits estimates presented in this preamble and in the PREA, and on the supporting data and assumptions the Agency used to develop these estimates.

Under E.O. 12866, a significant regulatory action is one meeting any of a number of specified conditions, including the following: Having an annual effect on the economy of $100 million or more, creating a serious inconsistency or interfering with an action of another agency, materially altering the budgetary impact of entitlements or the rights of entitlement recipients, or raising novel legal or policy issues. The Office of Management and Budget (OMB) has determined that the proposed rule is a significant

regulatory action because it raises novel legal and policy issues.

B. Population at Risk

The proposed rule would apply to all underground coal mines in the United States. In 2014, there were approximately 300 active underground coal mines using mobile machines on the working section. These mines employ approximately 39,870 miners (excluding office workers).

C. Net Benefits

Under the Mine Act, MSHA is not required to use estimated net benefits as the basis for its decision. At a 0 percent discount rate over 10 years, the estimated annualized values for net benefits of the proposed rule would be $2.1 million. At a 3 percent discount rate over 10 years, the estimated annualized values for net benefits of the proposed rule would be $0.3 million. At a 7 percent discount rate over 10 years, the estimated annualized values for net benefits of the proposed rule would be −$2.0 million.

MSHA anticipates the proposed rule would provide several benefits that were not quantified due to a lack of definitive information. For example, the proposed rule would result in additional savings to mine operators who would be able to avoid production delays typically associated with mine accidents. Pinning, crushing, and striking accidents can disrupt production at a mine during the time it takes to remove the injured miners, investigate the cause of the accident, and clean up the accident site. Such delays can last for a shift or more. Factors such as lost production, damaged equipment, and other miscellaneous expenses could result in significant costs to mine operators; however, MSHA has not quantified these savings due to the imprecision of the data.

The dollar estimate of benefits and costs are explained further in the Benefits (D) and Compliance Costs (E) sections.

D. Benefits

The proposed rule would significantly improve safety protections for underground coal miners by reducing their risk of being crushed, pinned, or struck by mobile machines. MSHA projects that the benefits of the proposed rule would gradually increase over time as the number of proximity detection systems in operation increases during the first 36 months after the effective date of a final rule.

MSHA reviewed the Agency's investigation reports for all powered haulage and machinery accidents that occurred from 1984 through 2014 (31 years) and determined that the use of proximity detection systems could have prevented 42 fatalities and 179 nonfatal injuries involving pinning, crushing, or striking accidents with coal hauling machines and scoops (since these miners were located in a proximity detection system warning/stopping zone). This count excludes fatalities and injuries that would not have been prevented by proximity detection systems on mobile machines, such as when a roof or rib fall pins a miner against a mobile machine or a mobile machine strikes and pushes another machine into a miner.

To estimate the number of injuries and fatalities that the proposed rule would prevent, MSHA projected the number of injuries and fatalities that proximity detection systems installed on mobile machines would prevent over the next 10 years. This projection was based on MSHA's review of the historical data involving injuries and fatalities occurring from 1984 through 2014. Based on the review of the historical data, MSHA projects that the proposed rule's requirements would prevent approximately 70 injuries and 15 fatalities over the next 10 years.

To estimate the monetary values of the reductions in deaths and nonfatal injuries, MSHA uses an analysis of the imputed values based on a Willingness-to-Pay approach. This approach relies on the theory of compensating wage differentials (*i.e.,* the wage premiums paid to workers to accept the risk associated with various jobs) in the labor market. A number of studies have shown a correlation between higher job risk and higher wages, suggesting that employees demand monetary compensation in return for incurring greater risk. The benefit of preventing a fatality is measured by what is conventionally called the Value of a Statistical Life (VSL), defined as the additional cost that individuals would be willing to bear for improvements in safety (that is, reductions in risks) that, in the aggregate, reduce the expected number of fatalities by one. MSHA emphasizes that the VSL is a statistical concept for comparing risk reduction and not the value of an individual's life. For the primary estimate, MSHA used a VSL of $9.4 million (2014 dollars), 40 percent of the VSL for permanent disabilities, and approximately 1 percent of the VSL for non-disabling injuries. Detailed information about how MSHA estimated the benefits are available in the PREA supporting this proposed rule. MSHA estimates the total undiscounted benefit of the proposed rule over 10 years would be $182.6 million at a 0 percent discount rate, $151.5 million at a 3 percent discount rate, and $120.0 million at a 7 percent discount rate. The total annualized benefits over 10 years would be approximately $18.3 million at a 0 percent discount rate, $17.2 million at a 3 percent discount rate, and $16.0 million at a 7 percent discount rate.

E. Compliance Costs

This section presents MSHA's estimates of the total costs to underground coal mine operators to comply with the proposed rule over a 10-year period. MSHA based the cost estimates on the likely actions that the Agency believes would be necessary to comply with the proposed rule. MSHA estimates that the total costs of the proposed rule over a 10-year period would be approximately $161 million at a 0 percent discount rate, $149 million at a 3 percent discount rate, and $135 million at a 7 percent discount rate. The total cost annualized over 10 years would be approximately $16.1 million per year at a 0 percent discount rate, $16.9 million per year at a 3 percent discount rate, and $17.9 million per year at a 7 percent discount rate.

As noted earlier, more detailed information about how MSHA estimated benefits and costs are available in the Preliminary Regulatory Economic Analysis (PREA) supporting this proposed rule. The PREA is available on MSHA's Web site, at *http://www.msha.gov/REGSINF5.HTM.*

IV. Feasibility

MSHA has concluded that the requirements of the proposed rule would be both technologically and economically feasible, and that the 36-month phase-in period would facilitate implementation of the proposed rule.

A. Technological Feasibility

MSHA has concluded that the proposal is technologically feasible. Mine operators are capable of equipping coal hauling machines and scoops with proximity detection systems in accordance with the proposed compliance dates. Proximity detection systems required under the proposal already exist and are commercially available for use in underground coal mines.

MSHA has experience with manufacturers of proximity detection systems and mine operators who have installed proximity detection systems on coal hauling machines and scoops. MSHA has approved two proximity detection systems for permissibility under existing regulations in 30 CFR

part 18, which can be installed on coal hauling machines and scoops. As of January 2015, at least 79 coal hauling machines and 50 scoops equipped with a proximity detection system are operating in underground coal mines in the United States. MSHA observed these systems provide warnings and stop coal hauling machines and scoops appropriately. MSHA also observed these coal hauling machines function properly while interacting with a continuous mining machine equipped with a proximity detection system. There were approximately eight people equipped with miner-wearable components during this demonstration.

MSHA also observed mobile machines, including coal hauling machines, scoops, and continuous mining machines, equipped with proximity detection systems operate in South Africa. MSHA observed proximity detection systems from several manufacturers provide warnings and slow and stop machines at appropriate distances.

Based on MSHA's experience with approving four proximity detection systems under 30 CFR part 18 as permissible for use on continuous mining machines and its observations in South Africa, the Agency anticipates that other manufacturers may develop proximity detection systems for use with coal hauling machines and scoops in the United States.

Continuous haulage systems consist of multiple interconnected mobile and bridge units. Although MSHA has no experience with continuous haulage systems equipped with a proximity detection system, MSHA anticipates that existing proximity detection systems can be adapted to continuous haulage systems to provide complete proximity detection coverage on each of the interconnected units. By connecting the proximity detection system with the electrical circuitry of the continuous haulage system, the proximity detection system can de-energize the entire continuous haulage system or stop all tram motors. As stated previously MSHA anticipates challenges with adapting proximity detection systems to continuous haulage systems due to the length of these machines and the unique interaction with continuous mining machines.

MSHA solicits comments on the technological feasibility of equipping coal hauling machines and scoops with proximity detection systems. MSHA specifically solicits comments on equipping continuous haulage systems with proximity detection systems. Comments should be specific and include alternatives, rationale for suggested alternatives, safety benefits to miners, and supporting data.

B. Economic Feasibility

MSHA has traditionally used a revenue screening test—whether the yearly compliance costs of a regulation are less than one percent of revenues, or are negative (*e.g.,* provide net cost savings)—to establish presumptively that compliance with the regulation is economically feasible for the mining industry. Based on this test, MSHA has concluded that the requirements of the proposed rule are economically feasible.

The annualized cost of the proposed rule to underground coal mine operators, discounted at 7 percent over 10 years, is $17.9 million. This represents approximately 0.08 percent of total annual revenue of $21.2 billion ($17.9 million cost/$21.2 billion revenue) for all underground coal mines. Since the estimated compliance cost is below one percent of estimated annual revenue, MSHA concludes no further analysis is required. Compliance with the provisions of the proposed rule would be economically feasible for the coal industry.

V. Regulatory Flexibility Act and Small Business Regulatory Enforcement Fairness Act

Pursuant to the Regulatory Flexibility Act (RFA) of 1980, as amended by the Small Business Regulatory Enforcement Fairness Act (SBREFA), MSHA has analyzed the compliance cost impact of the proposed rule on small entities. Based on that analysis, MSHA certifies that the proposed rule would not have a significant economic impact on a substantial number of small entities in terms of compliance costs. Therefore, the Agency is not required to develop an initial regulatory flexibility analysis.

The factual basis for this certification is presented in full in Chapter VII of the PREA and in summary form below.

A. Definition of a Small Mine

Under the RFA, in analyzing the impact of a rule on small entities, MSHA must use the Small Business Administration's (SBA's) definition for a small entity, or after consultation with the SBA Office of Advocacy, establish an alternative definition for the mining industry by publishing that definition in the **Federal Register** for notice and comment. MSHA has not established an alternative definition, and is required to use SBA's definition. The SBA defines a small entity in the mining industry as an establishment with 500 or fewer employees.

MSHA has also examined the impact of the proposed rule on mines with fewer than 20 employees, which MSHA and the mining community have traditionally referred to as small mines. These small mines differ from larger mines not only in the number of employees, but also in economies of scale in material produced, in the type and amount of production equipment, and in supply inventory. Therefore, their costs of complying with MSHA's rules and the impact of the Agency's rules on them will also tend to be different.

This analysis complies with the requirements of the RFA for an analysis of the impact on small entities while continuing MSHA's traditional definition of small mines.

B. Factual Basis for Certification

MSHA's analysis of the economic impact on small entities begins with a screening analysis. The screening compares the estimated costs of the proposed rule for small entities to their estimated revenues. When estimated costs are less than one percent of estimated revenues (for the size categories considered), MSHA believes it is generally appropriate to conclude that no further analysis is required to conclude that there is no significant economic impact on a substantial number of small entities. If estimated costs are equal to or exceed one percent of revenues, further analysis may be warranted.

Revenue for underground coal mines is derived from data on coal prices and tonnage. The average open market U.S. sales price of underground coal for 2013 was $60.98 per ton. This average price of underground coal for 2013 is from the Department of Energy (DOE), Energy Information Administration (EIA), *Annual Coal Report 2013,* January 2015, p. 47. The actual 2014 price is not yet available. Based on EIA reports in 2014 and 2015 showing little change in the price for underground coal since 2013, MSHA used the 2013 price of $60.98 per ton.

Total underground coal production in 2014 was approximately 3.1 million tons for mines with 1–19 employees. Multiplying tons by the 2013 price per ton, 2014 underground coal revenue was $189 million for mines with 1–19 employees. Total underground coal production in 2014 was approximately 240.1 million short tons for mines with 1–500 employees. Multiplying tons by the 2013 price per ton, 2014 underground coal revenue was $14.6 billion for mines with 1–500 employees. Total underground coal production in 2014 was approximately 348.4 million tons. Multiplying tons by the 2013 price per ton, total estimated revenue in 2014

for underground coal production was $21.2 billion.

The estimated yearly cost of the proposed rule for underground coal mines with 1–19 employees is approximately $1.7 million which represents approximately 0.90 percent of annual revenues. MSHA estimates that some mines might experience costs somewhat higher than the average per mine in their size category while others might experience lower costs.

When applying SBA's definition of a small mine, the estimated yearly cost of the proposed rule for underground coal mines with 1–500 employees is approximately $13.1 million which represents approximately 0.10 percent of annual revenue.

Based on this analysis, MSHA has determined that no further analysis is required to conclude that the proposed rule would not have a significant economic impact in terms of compliance costs on a substantial number of small underground coal mines, as defined by SBA. MSHA has provided, in the PREA accompanying this proposed rule, a complete analysis of the cost impact on this category of mines.

VI. Paperwork Reduction Act of 1995

A. Summary

The Paperwork Reduction Act (PRA) provides for the Federal government's collection, use, and dissemination of information. The goals of the PRA include minimizing paperwork and reporting burdens and ensuring the maximum possible utility from the information that is collected (44 U.S.C. 3501). The proposed information collections contained in this proposed rule are submitted for review under the PRA to the Office of Management and Budget (OMB), OMB Control Number 1219–0148. The proposal contains minor adjustments to burden hours for an existing paperwork package with OMB Control Number 1219–0066. MSHA does not include estimated burden hours and the cost of revising training plans on an annual basis because this burden would be accounted for under the OMB Control Number 1219–0009. Underground coal mine operators routinely revise their training plan at least yearly in accordance with 30 CFR part 48.

In the first three years the proposed rule is in effect, the mining community would incur 3,094 annual burden hours with related annual burden costs of approximately $313,354, and other annual administrative costs (office supplies and postage) related to the information collection package of approximately $114,565.

B. Procedural Details

The information collection package for this proposed rule has been submitted to OMB for review under 44 U.S.C. 3504, paragraph (h) of the Paperwork Reduction Act of 1995 (PRA), as amended. The methodology for estimating burden hours and related costs are in the Preliminary Regulatory Economic Analysis (PREA) for the proposed rule. The PREA can be accessed electronically at *http://www.msha.gov/REGSINF5.HTM.* For a detailed summary of the burden hours and related costs by provision, see the information collection package accompanying this proposed rule. A copy of the information collection package can be obtained from *http://www.msha.gov/regspwork.htm* or *http://www.regulations.gov* on the day following publication of this document in the **Federal Register** or from the Department of Labor by electronic mail request to Michel Smyth at *smyth.michel@dol.gov* (email) or (202) 693–4129 (voice) or Sheila McConnell at *mcconnell.sheila.a@dol.gov* or (202) 693–9440 (voice).

MSHA requests comments to:

- Evaluate whether the proposed collection of information is necessary for the proper performance of the functions of the Agency, including whether the information will have practical utility;
- Evaluate the accuracy of the Agency's estimate of the burden of the proposed collection of information, including the validity of the methodology and assumptions used;
- Enhance the quality, utility, and clarity of the information to be collected; and
- Minimize the burden of the collection of information on those who are to respond, including through the use of appropriate automated, electronic, mechanical, or other technological collection techniques or other forms of information technology, *e.g.,* permitting electronic submission of responses.

Comments on the information collection requirements should be sent to both OMB and MSHA. Addresses for both offices can be found in the **ADDRESSES** section of this preamble. The Department of Labor notes that, under the PRA, affected parties do not have to comply with the information collection requirements in this proposed rule until they have been approved by the Office of Management and Budget (OMB). The Department of Labor will inform the public of OMB's approval when it is obtained at the final rule stage. MSHA displays the OMB control numbers for the information collection requirements in its regulations in 30 CFR part 3.

The proposed total information collection burden is summarized as follows:

Title of Collection: Permissible Equipment Testing.

- *OMB Control Numbers:* 1219–0066.
- *Affected Public:* Private Sector-Businesses or other for-profits.
- *Estimated Number of Respondents:* 300 respondents.
- *Estimated Number of Responses:* 222 responses.
- *Estimated Annual Burden Hours:* 792 hours.
- *Estimated Annual Cost Related to Burden Hours:* $80,356.
- *Estimated Other Annual Costs Related to the Information Collection Package:* $114,565.

Title of Collection: Proximity Detection Systems for Mining Machines in Underground Coal Mines.

- *OMB Control Numbers:* 1219–0148.
- *Affected Public:* Private Sector-Businesses or other for-profits.
- *Estimated Number of Respondents:* 300 respondents.
- *Estimated Number of Responses:* 811,497 responses.
- *Estimated Annual Burden Hours:* 2,302 hours.
- *Estimated Annual Cost Related to Burden Hours:* $232,998.
- *Estimated Other Annual Costs Related to the Information Collection Package:* $0.

VII. Other Regulatory Considerations

A. The Unfunded Mandates Reform Act of 1995

MSHA has reviewed the proposed rule under the Unfunded Mandates Reform Act of 1995 (2 U.S.C. 1501 *et seq.*). MSHA has determined that this proposed rule does not include any federal mandate that may result in increased expenditures by State, local, or tribal governments; nor would it increase private sector expenditures by more than $100 million (adjusted for inflation) in any one year or significantly or uniquely affect small governments. Accordingly, the Unfunded Mandates Reform Act of 1995 requires no further Agency action or analysis. Since the proposed rule does not cost over $100 million in any one year, the proposed rule is not a major rule under the Unfunded Mandates Reform Act of 1995.

B. Executive Order 13132: Federalism

The proposed rule does not have ''federalism implications'' because it

would not ''have substantial direct effects on the States, on the relationship between the national government and the States, or on the distribution of power and responsibilities among the various levels of government.'' Accordingly, under E.O. 13132, no further Agency action or analysis is required.

C. The Treasury and General Government Appropriations Act of 1999: Assessment of Federal Regulations and Policies on Families

Section 654 of the Treasury and General Government Appropriations Act of 1999 (5 U.S.C. 601 note) requires agencies to assess the impact of Agency action on family well-being. MSHA has determined that the proposed rule would have no effect on family stability or safety, marital commitment, parental rights and authority, or income or poverty of families and children. Accordingly, MSHA certifies that this proposed rule would not impact family well-being.

D. Executive Order 12630: Government Actions and Interference With Constitutionally Protected Property Rights

The proposed rule does not implement a policy with takings implications. Accordingly, under E.O. 12630, no further Agency action or analysis is required.

E. Executive Order 12988: Civil Justice Reform

The proposed rule was written to provide a clear legal standard for affected conduct and was carefully reviewed to eliminate drafting errors and ambiguities, so as to minimize litigation and undue burden on the Federal court system. Accordingly, the proposed rule would meet the applicable standards provided in section 3 of E.O. 12988, Civil Justice Reform.

F. Executive Order 13045: Protection of Children From Environmental Health Risks and Safety Risks

The proposed rule would have no adverse impact on children. Accordingly, under E.O. 13045, no further Agency action or analysis is required.

G. Executive Order 13175: Consultation and Coordination With Indian Tribal Governments

This proposed rule does not have ''tribal implications'' because it would not ''have substantial direct effects on one or more Indian tribes, on the relationship between the Federal government and Indian tribes, or on the distribution of power and responsibilities between the Federal government and Indian tribes.'' Accordingly, under E.O. 13175, no further Agency action or analysis is required.

H. Executive Order 13211: Actions Concerning Regulations That Significantly Affect Energy Supply, Distribution, or Use

Executive Order 13211 requires agencies to publish a statement of energy effects when a rule has a significant energy action that adversely affects energy supply, distribution or use. MSHA has reviewed this proposed rule for its energy effects because the proposed rule applies to the underground mining sector. Because this proposed rule would result in annualized costs of approximately $17.9 million to the underground coal mining industry, relative to annual revenues of $21.2 billion in 2014, MSHA has concluded that it is not a significant energy action because it is not likely to have a significant adverse effect on the supply, distribution, or use of energy. Accordingly, under this analysis, no further Agency action or analysis is required.

I. Executive Order 13272: Proper Consideration of Small Entities in Agency Rulemaking

MSHA has thoroughly reviewed the proposed rule to assess and take appropriate account of its potential impact on small businesses, small governmental jurisdictions, and small organizations. MSHA has determined and certified that the proposed rule does not have a significant economic impact on a substantial number of small entities.

VIII. References

Dransite, Jerry, G. Clark, B. Warnock, D. Wease. ''Remotely Controlled Mining Machinery Study,'' MSHA Approval and Certification Center, August 3, 1998.

Hintermann, Beat, Anna Alberini, and Anil Markandya. ''Estimating the Value of Safety with Labour Market Data: Are the Results Trustworthy?,'' *Applied Economics,* 42(9):1085–1100, 2010. First published on July 18, 2008. URL: *http://dx.doi.org/10.1080/00036840802260940.*

Magat, W., W. Viscusi, and J. Huber. ''A Reference Lottery Metric for Valuing Health'', *Management Science,* 42(8):1118–1130m, 1996.

Sanders, M.S., and G.R. Kelly. ''Visual Attention Locations for Operating Continuous Miners, Shuttle Cars, and Scoops—Volume 1 (contract J0387213, Canyon Research Group, Inc.)'', USBM OFR 29(1)–82, 1981. NTIS PB 82–187964.

U.S. Department of Labor, Mine Safety and Health Administration, ''Program Policy Manual, Vol. V—Coal Mines, Criteria—Mantrips,'' October 2003 (Release V–34), pp. 126 and 127.

U.S. Department of Labor, Mine Safety and Health Administration, ''Proximity Protection System Specification.'' October 4, 2004.

U.S. Department of Labor, Mine Safety and Health Administration, Request for Information. ''Proximity Detection Systems for Underground Mines,'' **Federal Register**, Vol. 75, pg. 2009, February 1, 2010.

U.S. Department of Labor, Mine Safety and Health Administration. ''Preliminary Regulatory Economic Analysis for Proximity Detection Systems for Mobile Machines in Underground Mines,'' Proposed Rule (RIN 1219–AB78), *http://www.msha.gov/prea.HTM,* August 2011.

Viscusi, W. and J. Aldy. ''The Value of a Statistical Life: A Critical Review of Market Estimates Throughout the World,'' *Journal of Risk and Uncertainty,* 27:5–76, 2003.

List of Subjects in 30 CFR Part 75

Mine safety and health, Reporting and recordkeeping requirements, Underground coal mines.

Joseph A. Main,

Assistant Secretary of Labor for Mine Safety and Health.

For the reasons set out in the preamble and under the authority of the Federal Mine Safety and Health Act of 1977, as amended, MSHA is proposing to amend chapter I of title 30 of the Code of Federal Regulations as follows:

PART 75—MANDATORY SAFETY STANDARDS—UNDERGROUND COAL MINES

■ 1. The authority citation for part 75 continues to read as follows:

Authority: 30 U.S.C. 811, 813(h), 957.

■ 2. Add § 75.1733 to read as follows:

§ 75.1733 Proximity detection systems; other mobile machines.

(a) *Machines covered.* Operators must equip coal hauling machines and scoops on working sections, except longwall working sections, with machine-mounted components of a proximity detection system in accordance with the following dates. For proximity detection systems with miner-wearable components, the mine operator must provide a miner-wearable component to be worn by each miner on the working sections, except longwall working sections, by the following dates.

(1) Coal hauling machines and scoops manufactured after [INSERT EFFECTIVE DATE OF THE FINAL RULE] must meet the requirements in this section no later than [INSERT

DATE 8 MONTHS AFTER THE EFFECTIVE DATE OF THE FINAL RULE]. These machines must meet the requirements in this section when placed in service with a proximity detection system.

(2) Coal hauling machines or scoops manufactured and equipped with a proximity detection system on or before [INSERT EFFECTIVE DATE OF THE FINAL RULE] must:

(i) Meet the requirements in this section no later than [INSERT DATE 8 MONTHS AFTER THE EFFECTIVE DATE OF THE FINAL RULE] if modifications to the existing proximity detection system can be made underground; or

(ii) Meet the requirement in this section no later than [INSERT DATE 36 MONTHS AFTER THE EFFECTIVE DATE OF THE FINAL RULE] if the existing proximity detection system cannot be modified underground or needs to be replaced with a new proximity detection system.

(3) Coal hauling machines and scoops manufactured and not equipped with a proximity detection system on or before [INSERT EFFECTIVE DATE OF THE FINAL RULE] must meet the requirements in this section no later than [INSERT DATE 36 MONTHS AFTER THE EFFECTIVE DATE OF THE FINAL RULE]. These machines must meet the requirements in this section when placed in service with a proximity detection system.

(b) *Requirements for proximity detection systems.* If a proximity detection system includes miner-wearable components, both the machine-mounted components and miner-wearable components constitute the proximity detection system. The system must:

(1) Cause a machine to stop before contacting a miner except for a miner who is in the on-board operator's compartment;

(2) Provide warning signals, distinguishable from other signals, that alert miners before the system causes a machine to stop: An audible and visual warning signal on any miner-wearable component and a visual warning signal on the machine;

(3) Provide a visual signal on the machine that indicates the machine-mounted components are functioning properly;

(4) Prevent movement of the machine if any machine-mounted component of the system is not functioning properly. However, a system with any machine-mounted component that is not functioning properly may allow machine movement if an audible or visual warning signal, distinguishable from other signals, is provided during movement. Such movement is permitted only for purposes of relocating the machine from an unsafe location for repair;

(5) Be installed to prevent interference that adversely affects performance of any electrical system; and

(6) Be installed and maintained in proper operating condition by a person trained in the installation and maintenance of the system.

(c) *Proximity detection system checks.* Operators must:

(1) Designate a person who must perform a check of machine-mounted components of the proximity detection system to verify that components are intact and the system is functioning properly, and to take action to correct defects:

(i) At the beginning of each shift when the machine is to be used; or

(ii) Immediately prior to the time the machine is to be operated if not in use at the beginning of a shift; or

(iii) Within 1 hour of a shift change if the shift change occurs without an interruption in production.

(2) Check for proper operation of each miner-wearable component at the beginning of each shift that the component is to be used. Defects must be corrected before the component is used.

(d) *Certifications and records.* The operator must make and retain certifications and records as follows:

(1) At the completion of the check of machine-mounted components required under paragraph (c)(1) of this section, a certified person under § 75.100 must certify by initials, date, and time that the check was conducted. Defects found as a result of the check in paragraph (c)(1), including corrective actions and dates of corrective actions, must be recorded before the end of the shift;

(2) Make a record of the defects found as a result of the check of miner-wearable components under paragraph (c)(2) of this section, including corrective actions and dates of corrective actions;

(3) Make a record of the persons trained in the installation and maintenance of proximity detection systems required under paragraph (b)(6) of this section;

(4) Maintain records in a secure book or electronically in a secure computer system not susceptible to alteration; and

(5) Retain records for at least one year and make them available for inspection by authorized representatives of the Secretary and representatives of miners.

[FR Doc. 2015–21573 Filed 9–1–15; 8:45 am]

BILLING CODE 4510–43–P

ENVIRONMENTAL PROTECTION AGENCY

40 CFR Part 52

[EPA–R09–OAR–2014–0256; FRL–9927–13–Region 9]

Approval and Promulgation of Implementation Plans; Arizona; Phased Discontinuation of Stage II Vapor Recovery Program

AGENCY: Environmental Protection Agency (EPA).

ACTION: Proposed rule.

SUMMARY: The Environmental Protection Agency (EPA) is proposing to approve a state implementation plan (SIP) revision from the Arizona Department of Environmental Quality related to the removal of ''Stage II'' vapor recovery equipment at gasoline dispensing facilities in the Phoenix-Mesa area. Specifically, the EPA is proposing to approve a SIP revision that eliminates the requirement to install and operate such equipment at new gasoline dispensing facilities, and that provides for the phased removal of such equipment at existing gasoline dispensing facilities from October 2016 through September 2018. The EPA has previously determined that onboard refueling vapor recovery is in widespread use nationally and waived the stage II vapor recovery requirement. The EPA is proposing to approve this SIP revision because the resultant short-term incremental increase in emissions would not interfere with attainment or maintenance of the national ambient air quality standards or any other requirement of the Clean Air Act and because it would avoid longer-term increases in emissions from the continued operation of stage II vapor recovery equipment at gasoline dispensing facilities in the Phoenix-Mesa area.

DATES: Comments must be received by October 2, 2015.

ADDRESSES: Submit your comments, identified by Docket No. EPA–R09–OAR–2014–0256, by one of the following methods:

1. *Federal Rulemaking Portal: http://www.regulations.gov.* Follow the on-line instructions for submitting comments.

2. *Email:* Jeffrey Buss at *buss.jeffrey@epa.gov.*

3. *Fax:* Jeffrey Buss, Air Planning Office (AIR–2), at fax number 415–947–3579.

4. *Mail:* Jeffrey Buss, Air Planning Office (AIR–2), U.S. Environmental Protection Agency, Region IX, 75 Hawthorne, San Francisco, California 94105.

5. *Hand or Courier Delivery:* Jeffrey Buss, Air Planning Section (AIR–2), U.S. Environmental Protection Agency, Region IX, 75 Hawthorne, San Francisco, California 94105. Such deliveries are only accepted during the Regional Office's normal hours of operation. Special arrangements should be made for deliveries of boxed information.

Instructions: Direct your comments to Docket ID No. EPA–R09–OAR–2014–0256. EPA's policy is that all comments received will be included in the public docket without change and may be made available online at *www.regulations.gov,* including any personal information provided, unless the comment includes information claimed to be Confidential Business Information (CBI) or other information the disclosure of which is restricted by statute. Do not submit information through *www.regulations.gov* or email that you consider to be CBI or otherwise protected from disclosure. The *www.regulations.gov* Web site is an anonymous access system, which means the EPA will not know your identity or contact information unless you provide it in the body of your comment. If you send an email comment directly to the EPA without going through *www.regulations.gov,* your email address will be automatically captured and included as part of the comment that is placed in the public docket and made available on the Internet. If you submit an electronic comment, the EPA recommends that you include your name and other contact information in the body of your comment and with any disk or CD–ROM you submit. If the EPA cannot read your comment due to technical difficulties and cannot contact you for clarification, the EPA may not be able to consider your comment. Electronic files should avoid the use of special characters, any form of encryption, and be free of any defects or viruses.

Docket: All documents in the docket are listed in the *www.regulations.gov* index. Although listed in the index, some information is not publicly available, *e.g.,* CBI or other information whose disclosure is restricted by statute. Certain other material, such as copyrighted material, will be publicly available only in hard copy. Publicly available docket materials are available either electronically in *www.regulations.gov* or in hard copy at the Air Planning Office (AIR–2), U.S. Environmental Protection Agency, Region IX, 75 Hawthorne Street, San Francisco, California 94105. The EPA requests that if at all possible, you contact the person listed in the **FOR FURTHER INFORMATION CONTACT** section to schedule your inspection during normal business hours.

FOR FURTHER INFORMATION CONTACT: Jeffrey Buss, Office of Air Planning, U.S. Environmental Protection Agency, Region 9, (415) 947–4152, email: *buss.jeffrey@epa.gov.*

SUPPLEMENTARY INFORMATION: In the ''Rules and Regulations'' section of this **Federal Register**, the EPA is approving the State of Arizona's Stage II vapor recovery SIP revision in a direct final action without prior proposal because we believe this SIP revision is not controversial. A detailed rationale for the approval is set forth in the direct final rule. If we receive adverse comments, however, we will publish a timely withdrawal of the direct final rule and address the comments in a subsequent final rule based on this proposed rule. Please note that if the EPA receives adverse comment on an amendment, paragraph, or section of this rule and if that provision may be severed from the remainder of the rule, the EPA may adopt as final those provisions of the rule that are not the subject of an adverse comment.

We do not plan to open a second comment period, so anyone interested in commenting should do so at this time. If we do not receive adverse comments, no further activity is planned. For further information, see please see the direct final action.

Dated: March 30, 2015.

Jared Blumenfeld,

Regional Administrator, Region IX.

Editorial Note: This document was received for publication by the Office of the Federal Register on August 27, 2015.

[FR Doc. 2015–21684 Filed 9–1–15; 8:45 am]

BILLING CODE 6560–50–P

DEPARTMENT OF HEALTH AND HUMAN SERVICES

Centers for Medicare & Medicaid Services

42 CFR Part 413

[CMS–1628–CN]

RIN 0938–AS48

Medicare Program; End-Stage Renal Disease Prospective Payment System; Correction

AGENCY: Centers for Medicare & Medicaid Services (CMS), HHS.

ACTION: Correction.

SUMMARY: This document corrects a technical error that appeared in the proposed rule published in the **Federal Register** on July 1, 2015, entitled ''Medicare Program; End-Stage Renal Disease Prospective Payment System, and Quality Incentive Program.''

DATES: This correction is effective on September 2, 2015.

FOR FURTHER INFORMATION CONTACT: Michelle Cruse, (410) 786–7540.

SUPPLEMENTARY INFORMATION:

I. Background

In FR Doc. 2015–16074 of July 1, 2015 (80 FR 37808) there was a technical error that is discussed in the ''Summary of Errors,'' and further identified and corrected in the ''Correction of Errors'' section below. The provisions in this correction document are effective as if they had been included in the document published on July 1, 2015. Accordingly, the corrections are effective September 2, 2015.

II. Summary of Errors

On page 37814 of the preamble, we discovered an error in the reference to the cost report column from which we derived the data for one of the dependent variables used in developing the two-equation regression methodology that we performed to analyze and propose revisions to the End-Stage Renal Disease (ESRD) Prospective Payment System (PPS) payment adjusters for Calendar Year (CY) 2016 ESRD PPS proposed rule. Specifically, we measured resource use of the maintenance dialysis services included in the current bundle of composite rate services using only ESRD facility data obtained from the Medicare cost reports for independent ESRD facilities and hospital-based ESRD facilities. We indicated in the proposed rule that for independent ESRD facilities, the average composite rate cost per treatment for each ESRD facility was calculated by dividing the total reported allowable costs for composite rate services for cost reporting periods ending in CYs 2012 and 2013 (Worksheet B, column 13A, lines 8–17 on CMS–265–11; Worksheet I–2, column 11, lines 2–11 on CMS–2552–10) by the total number of dialysis treatments (Worksheet C, column 1, lines 8–17 on CMS 265–11). In the CY 2016 ESRD PPS proposed rule, we incorrectly referred to column 13A when we intended to refer to column 11A in Worksheet B. Therefore, we are publishing this correction notice to include the appropriate location for the average composite rate cost per treatment.

III. Waiver of 60-Day Comment Period

We ordinarily permit a 60-day comment period on notices of proposed rulemaking in the **Federal Register**, as provided in section 1871(b)(1) of the Act. However, this period may be shortened, as provided under section 1871(b)(2)(C) of the Act, when the Secretary finds good cause that a 60-day comment period would be impracticable, unnecessary, or contrary to the public interest, and incorporates a statement of the finding and its reasons in the rule issued. Because the correction in this document does not make any changes to the substantive policies proposed in the CY 2016 ESRD PPS proposed rule, but merely corrects the reference to a column in the preamble of the proposed rule, this correcting document does not constitute agency rulemaking and therefore, the 60-day comment period does not apply.

In addition, we believe it is important for the public to have the corrected information as soon as possible and find no reason to delay dissemination of it.

For the reasons stated previously, we find it both unnecessary and contrary to the public interest to undertake further notice and comment procedures with respect to this correcting document.

IV. Correction of Errors

In FR Doc. 2015–16074 of July 1, 2015 (80 FR 37808), make the following corrections:

■ 1. On page 37814, second column, second full paragraph, in line 16, the reference to ''13A'' is corrected to read ''11A''.

Dated: August 27, 2015.

Madhura Valverde,

Executive Secretary to the Department, Department of Health and Human Services.

[FR Doc. 2015–21783 Filed 9–1–15; 8:45 am]

BILLING CODE 4120–01–P

FEDERAL COMMUNICATIONS COMMISSION

47 CFR Part 54

[WC Docket Nos. 11–42, 09–197 and 10–90; Report No. 3027]

Petitions for Reconsideration of Action in Rulemaking Proceeding

AGENCY: Federal Communications Commission.

ACTION: Petition for reconsideration.

SUMMARY: Petitions for Reconsideration (Petitions) have been filed in the Commission's Rulemaking proceeding by Thomas C. Power, on behalf of CTIA—THE WIRELESS ASSOCIATION; John J. Heitmann on behalf of The Wireless ETC Petitioners.

DATES: Oppositions to the Petitions must be filed on or before September 17, 2015. Replies to an opposition must be filed on or before September 11, 2015.

ADDRESSES: Federal Communications Commission, 445 12th Street SW., Washington, DC 20554.

FOR FURTHER INFORMATION CONTACT: Jodie Griffin, Telecommunications Access Policy Division, Wireline Competition Bureau, (202) 418–7550, email: *jodie.griffin@fcc.gov.*

SUPPLEMENTARY INFORMATION: This is a summary of Commission's document, Report No. 3027, released August 26, 2015. The full text of the Petitions is available for viewing and copying in Room CY–B402, 445 12th Street SW., Washington, DC or may be accessed online via the Commission's Electronic Comment Filing System at *http://apps.fcc.gov/ecfs/.* The Commission will not send a copy of this *Notice* pursuant to the Congressional Review Act, 5 U.S.C. 801(a)(1)(A) because this notice does not have an impact on any rules of particular applicability.

Subject: Lifeline and Link Up Reform and Modernization, Telecommunications Carriers Eligible for Universal Service Support, Connect America Fund, published at 80 FR 40923, July 14, 2015, in WC Docket Nos. 11–42, 09–197, and 10–90, and published pursuant to 47 CFR 1.429(e). *See also* § 1.4(b)(1) of the Commission's rules.

Number of Petitions Filed: 2.

Federal Communications Commission.

Marlene H. Dortch,

Secretary.

[FR Doc. 2015–21763 Filed 9–1–15; 8:45 am]

BILLING CODE 6712–01–P

DEPARTMENT OF COMMERCE

National Oceanic and Atmospheric Administration

50 CFR Part 660

[Docket No. 150721634–5773–01]

RIN 0648–BF11

Magnuson-Stevens Act Provisions; Fisheries Off West Coast States; Pacific Coast Groundfish Fishery; Process for Divestiture of Excess Quota Shares in the Individual Fishing Quota Fishery

AGENCY: National Marine Fisheries Service (NMFS), National Oceanic and Atmospheric Administration (NOAA), Commerce.

ACTION: Proposed rule, request for comments.

SUMMARY: In January 2011, NMFS implemented the groundfish trawl rationalization program (a catch share program) for the Pacific coast groundfish limited entry trawl fishery. The program was implemented through Amendment 20 to the Pacific Coast Groundfish Fishery Management Plan and the corresponding implementing regulations. Amendment 20 established the trawl rationalization program, which includes an Individual Fishing Quota program for limited entry trawl participants. Under current regulations, quota share (QS) permit owners must divest quota share holdings that exceed accumulation limits by November 30, 2015. This proposed action would make minor procedural modifications to the program regulations to clarify how divestiture and revocation of excess quota share could occur in November, 2015, and establish procedures applicable in the future if divestiture becomes necessary.

DATES: Comments on this proposed rule must be received on or before October 2, 2015.

ADDRESSES: You may submit comments on this document, identified by NOAA–NMFS–2015–0086, by any of the following methods:

- *Electronic Submission:* Submit all electronic public comments via the Federal e-Rulemaking Portal. Go to *www.regulations.gov/#!docketDetail;D=NOAA-NMFS-2015-0086*, click the ''Comment Now!'' icon, complete the required fields, and enter or attach your comments.
- *Mail:* Submit written comments to William W. Stelle, Jr., Regional Administrator, West Coast Region, NMFS, 7600 Sand Point Way NE., Seattle, WA 98115–0070; Attn: Colby Brady.
- *Fax:* 206–526–6117; Attn: Colby Brady.

Instructions: Comments sent by any other method, to any other address or individual, or received after the end of the comment period, may not be considered by NMFS. All comments received are a part of the public record and will generally be posted for public viewing on *www.regulations.gov* without change. All personal identifying information (*e.g.*, name, address, etc.), confidential business information, or otherwise sensitive information submitted voluntarily by the sender will be publicly accessible. NMFS will accept anonymous comments (enter ''N/A'' in the required fields if you wish to remain anonymous).

FOR FURTHER INFORMATION CONTACT: Colby Brady (West Coast Region, NMFS), phone: 206–526–6117, and email: *colby.brady@noaa.gov*, or contact Sarah Towne (West Coast Region, NMFS), phone: 206–526–4140, and email: *sarah.towne@noaa.gov.*

SUPPLEMENTARY INFORMATION:

Electronic Access

This proposed rule is accessible via the Internet at the Office of the Federal Register Web site at *https://www.federalregister.gov.* Background information and documents are available at the NMFS West Coast Region Web site at *http://www.westcoast.fisheries.noaa.gov* and at the Pacific Fishery Management Council's Web site at *http://www.pcouncil.org.*

The final environmental impact statement (FEIS) regarding specifications to rationalize the trawl fishery for the implementation of Amendment 20 to the Pacific Coast Groundfish Fishery Management Plan (PCGFMP, or FMP) is available on the NOAA Fisheries West Coast Region Web site at: *http://www.pcouncil.org/groundfish/fishery-management-plan/fmp-amendment-20* Copies of both documents are available from Donald McIsaac, Executive Director, Pacific Fishery Management Council (Council), 7700 NE Ambassador Place, Portland, OR 97220, phone: 503–820–2280.

Background

In January 2011, the National Marine Fisheries Service (NMFS) implemented a trawl rationalization program, which is a catch share program, for the Pacific coast groundfish limited entry trawl fishery. The program was implemented through Amendment 20 to the PCGFMP and the corresponding implementing regulations at 50 CFR part 660. Amendment 20 established the trawl rationalization program that consists of: an Individual Fishing Quota (IFQ) program for the shorebased trawl fleet (including whiting and nonwhiting sectors), and cooperative (coop) programs for the at-sea mothership and catcher/processor trawl fleets (whiting only).

Regulations in §§ 660.111 and 660.140(d)(4) define and describe quota share (QS) and individual bycatch quota (IBQ) control limits as the maximum amount of QS and IBQ that a person, individually or collectively, may own or control in the shorebased IFQ program. The regulations set individual control limits for each of the 30 IFQ species, as well as an aggregate nonwhiting control limit across species. NMFS collects ownership interest information annually in order to ensure compliance with the control limits, and QS permit owners must disclose the identity and share of any persons who have an ownership interest greater or equal to 2% of the QS permit.

Consistent with the trawl rationalization program, some QS permit owners were initially allocated an amount of QS and IBQ that exceeded one or more of the control limits, based on their catch history during the qualifying years. The regulations provided these QS permit owners an adjustment period to hold the excess shares, but they must completely divest of any excess QS or IBQ by November 30, 2015, as specified at § 660.140(d)(4)(v). For any QS permit owner who does not divest of their excess shares by the deadline, the regulations specify that NMFS will revoke their excess QS or IBQ and redistribute it to other QS permit owners in proportion to their current QS or IBQ holdings, up to the control limits.

NMFS seeks to clarify the revocation protocols for cases where QS permit owners do not voluntarily divest before the deadline. The current regulations at § 660.140(d)(4)(v) make it clear that if a QS permit owner owns QS in excess of a control limit after the divestiture deadline, NMFS will revoke and redistribute the excess QS to all other QS permits in proportion to their QS and IBQ holdings, up to the control limits. These regulations are sufficient in simple situations where the permit owner only owns one permit. However, the current regulations do not address how NMFS would revoke shares from a person or entity that is over an individual species control limit across several QS permits, or how NMFS would revoke shares from a person or entity that is over the aggregate nonwhiting control limit. In addition, the Council's Groundfish Advisory Panel (GAP) identified a problem where QS permit owners who are over the aggregate nonwhiting control limit may not be able to find a willing recipient to take their excess QS.

Proposed Action

The proposed action includes two regulatory mechanisms that further implement original QS divestiture provisions of the trawl rationalization program: proportional reduction of QS and abandonment. All items were discussed at the November 2014 Council meeting in Costa Mesa, CA, and at the April 2015 Council meeting in Rohnert Park, CA.

NMFS proposes to apply a ''proportional reduction'' methodology to revoke excess shares from QS permit owners who exceed individual species control limits across several QS permits or exceed the aggregate nonwhiting control limit and fail to divest by the November 30, 2015, divestiture deadline. In cases where a person or entity has not divested to the control limits for individual species across QS permits, NMFS would revoke QS at the species level in proportion to the amount the QS percentage from each permit contributes to the total QS percentage owned. In cases where a QS permit owner has not divested to the control limit for aggregate nonwhiting QS holdings, NMFS would revoke QS at the species level in proportion to the amount of the aggregate overage divided by the aggregate total owned. Because QS is a valuable asset, it is important to clearly define and receive public comment on the process by which NMFS would permanently revoke QS to the QS and IBQ control limits. More information and examples are provided below.

In addition, NMFS proposes a process by which QS permit owners who are over the aggregate nonwhiting control limit may abandon shares of their choosing to NMFS by November 15, 2015. The ''abandonment'' option would provide additional flexibility for QS permit owners who are over the aggregate limit, because they could choose which nonwhiting IFQ species to abandon, rather than waiting until the divestiture deadline when some of each IFQ species would be revoked proportionally by NMFS.

NMFS also proposes to modify the regulations so that the same revocation and abandonment procedures could be used in the future if necessary. NMFS proposes to notify any QS permit owner who is found to exceed an accumulation limit after the November 30, 2015, divestiture deadline, and provide the QS permit owner 60 days to divest of the excess QS. NMFS also proposes that any QS permit owner who is found to exceed the aggregate nonwhiting control limit may abandon QS in excess of the limit to NMFS within 30 days of the notification, using the same method described further below.

Proportional Reduction to Individual Species Control Limits

As described above, the current regulations at § 660.140(d)(4) set individual control limits for each of 30 IFQ species. At the time of this rulemaking, nine unique entities hold QS in excess of one or more of the individual species control limits, and must divest to the limits by November 30, 2015. In the event that a QS permit

owner has not divested to the individual species control limits by November 30, 2015, current regulations described in § 660.140(d)(4)(v) clearly define how NMFS will revoke and redistribute the excess QS or IBQ if the QS permit owner only has ownership in one QS permit. NMFS will revoke the QS or IBQ in excess of the limit and redistribute the excess QS to all other QS permit owners in proportion to their current QS holdings, up to the control limits. For example, the individual species control limit for starry flounder is 10 percent. If a QS permit owner holds 11 percent of starry flounder after the divestiture deadline, NMFS would revoke one percent of starry flounder and redistribute it to all other QS permit owners in proportion to their current QS holdings, up to the control limits.

However, if a QS permit owner holds QS in excess of an individual species control limit across several QS permits after the November 30, 2015, deadline, current regulations do not specify how the excess QS would be revoked. NMFS proposes to revoke QS at the species level in proportion to the amount the QS percentage from each permit contributes to the total QS percentage owned. For example, if a QS permit owner holds a total of 11 percent of starry flounder across five different QS permits, NMFS would need to revoke a total of one percent from the permit owner. In order to determine how much to revoke from each QS permit, NMFS would calculate how much each of the five QS permits was contributing to the total amount of starry flounder owned by the permit owner. In Table 1 below, QS Permit 1 accounts for 18.182 percent of the total starry flounder QS owned by the permit owner, QS Permit 2 accounts for 9.091 percent, etc. (see Column C below in Table 1). NMFS would then apply this same proportion to the overage amount to determine how much to revoke from each permit. For example, since the QS permit owner held one percent in excess of the control limit, 0.182 percent would be revoked from QS Permit 1, 0.091 percent would be revoked from QS Permit 2, etc. (see Column D below in Table 1). A total of one percent would be revoked across all permits to reach the 10 percent individual species control limit.

TABLE 1— EXAMPLE OF HOW NMFS WOULD REVOKE QS FOR AN ENTITY OVER AN INDIVIDUAL SPECIES CONTROL LIMIT ACROSS MULTIPLE QS PERMITS AFTER THE DIVESTITURE DEADLINE

[NMFS proposes to revoke QS from each permit in proportion to the amount each QS permit contributes to the overage. This example is speculative, and does not intentionally bear any resemblance to any particular QS owner.]

A	B	C	D	E
QS permit	QS percent owned by individual in each permit for species X (%)	Individual pemit's share of total ercent owned across permits (%) = [B/total (11%)]	Amount revoked and redistributed by NMFS (%) [C × overage (1%)]	Amount remaining owned by individual (%) = (B–D)
1	2	18.182	0.182	1.818
2	1	9.091	0.091	0.909
3	3	27.273	0.273	2.727
4	1	9.091	0.091	0.909
5	4	36.364	0.364	3.636
Total QS% Owned by Individual Across QS Permits	11		1.000	10.000
QS Control Limit for Species	10			
Amount Over Control Limit	1			

The proposed method would provide NMFS with clear guidance of how to revoke QS from QS permit owners who are over an individual species control limit as of the November 30, 2015, divestiture deadline. Because NMFS will strive to make all quota pound allocations to QS permit owners on or about January 1, 2016, and all QS permits must be under the control limits by this time, a clear process will allow NMFS to make any necessary QS revocations and redistributions, and subsequent quota pound allocations, in a timely manner.

If a QS permit owner was found to exceed an individual control limit across QS permits in 2016 or beyond, NMFS proposes to notify the QS permit owner and provide them 60 days from the time of notification to transfer the excess QS/IBQ. If the QS permit owner still held excess QS/IBQ at the end of the 60-day divestiture period, NMFS proposes to revoke the excess QS/IBQ using the same method described above, and redistribute the excess QS/IBQ to all other QS permit owners in proportion to their QS/IBQ holdings on or about January 1 of the following calendar year, based on current ownership records. No person would be allocated an amount of QS or IBQ that would put that person over an accumulation limit.

Widow rockfish cannot be transferred under current regulations until widow reallocation is considered and implemented. Because widow rockfish QS percentages could be reallocated to QS permit owners in different amounts than their current holdings, NMFS will not revoke excess widow QS until widow rockfish reallocation consideration and applicable implementation is completed. Excessive shares of widow rockfish and potential divestiture will be considered as part of the forthcoming widow rockfish reallocation proposed rule.

Proportional Reduction to the Aggregate Nonwhiting Control Limit

As described above, the current regulations at § 660.140(d)(4) set an aggregate nonwhiting control limit across IFQ species. The limit is 2.7 percent of the total nonwhiting, nonhalibut QS, and is calculated by multiplying a QS permit owner's QS for each species by the 2010 optimum yield (OY), and then converting the total back into a percentage. The aggregate limit is more restrictive than the sum of individual species control limits, which was the intent of the Council and NMFS since the beginning of the trawl rationalization program in January 2011.

At the time of this rulemaking, three or less unique entities hold QS in excess of the aggregate nonwhiting control limit (defined this way due to confidentiality requirements), and must

divest to the 2.7 percent limit by November 30, 2015. In the event that a QS permit owner has not divested to the aggregate nonwhiting control limit by November 30, 2015, current regulations do not describe how QS should be revoked. NMFS proposes to revoke QS at the species level in proportion to the amount of the aggregate overage divided by the aggregate total owned. For example, if a QS permit owner held the maximum allowable amount of each IFQ species (nonwhiting, nonhalibut) up to each of the individual species control limits, they would have aggregate holdings of 5.840 percent, or 3.140 percent above the 2.7 percent aggregate nonwhiting control limit (see Columns A–D in Table 2, below). NMFS would divide the aggregate overage (3.140 percent) by the total aggregate amount owned (5.840 percent), and multiply this value (53.767%) by the QS owned for each nonwhiting nonhalibut species to get the amount of QS to revoke from each species (see Columns E–H in Table 2, below). For example, in Table 2 below, NMFS would revoke 5.377 percent of arrowtooth flounder and 7.097 percent of bocaccio, etc. (see Column F in Table 2) from this QS permit owner in order to get them down to the 2.7% aggregate nonwhiting control limit. This example is intended to illustrate the basis for the calculation, but the revocation calculation will be affected by the moratorium on widow rockfish QS trading until widow is potentially reallocated, as described in Table 2 below.

BILLING CODE 3510–22–P

Table 2. Example of How NMFS Would Revoke QS for an Entity Over the 2.7 Percent Aggregate Nonwhiting Control Limit After the Divestiture Deadline. (NMFS proposes to revoke QS from each nonwhiting nonhalibut species in proportion to the amount of the aggregate overage divided by the aggregate total owned. This example is speculative, and does not intentionally bear any resemblance to any particular QS owner.)

A	B	C	D	E	F	G	H
IFQ Species	2010 Shorebased Trawl Allocation (lbs)	An Example Entity's QS% - Here Set Equal to Control Limits	Conversion of Example Entity's QS to Pounds	Overage/Total Owned = (3.140%/5.840%)	Amount Revoked and Redistributed by NMFS = (C*E)	Amount Remaining Owned by Example Entity = (C-G)	Conversion of Example Entity's Remaining QS to Pounds
Arrowtooth flounder	21,156,441	10.000%	2,115,644	53.767%	5.377%	4.623%	978,119
Bocaccio rockfish South of 40°10' N.	113,287	13.200%	14,954	53.767%	7.097%	6.103%	6,914
Canary rockfish	34,294	4.400%	1,509	53.767%	2.366%	2.034%	698
Chilipepper rockfish South of 40°10' N.	4,046,034	10.000%	404,603	53.767%	5.377%	4.623%	187,059
Cowcod South of 40°10' N.	4,409	17.700%	780	53.767%	9.517%	8.183%	361
Darkblotched rockfish	655,071	4.500%	29,478	53.767%	2.420%	2.080%	13,629
Dover sole	34,546,436	2.600%	898,207	53.767%	1.398%	1.202%	415,265
English sole	20,398,822	5.000%	1,019,941	53.767%	2.688%	2.312%	471,546
Lingcod North of 40°10' N.	3,494,084	2.500%	87,352	53.767%	1.344%	1.156%	40,385
Lingcod South of 40°10' N.	1,283,443	2.500%	32,086	53.767%	1.344%	1.156%	14,834
Longspine thornyheads North of 34°27' N.	4,544,278	6.000%	272,657	53.767%	3.226%	2.774%	126,057
Minor shelf rockfish North of 40°10' N.	543,925	5.000%	27,196	53.767%	2.688%	2.312%	12,574
Minor shelf rockfish South of 40°10' N.	133,526	9.000%	12,017	53.767%	4.839%	4.161%	5,556
Minor slope rockfish North of 40°10' N.	1,950,209	5.000%	97,510	53.767%	2.688%	2.312%	45,082
Minor slope rockfish South of 40°10' N.	869,459	6.000%	52,168	53.767%	3.226%	2.774%	24,118
Other flatfish	9,646,547	10.000%	964,655	53.767%	5.377%	4.623%	445,986
Pacific cod	3,340,003	12.000%	400,800	53.767%	6.452%	5.548%	185,301
Pacific ocean perch North of 40°10' N.	377,577	4.000%	15,103	53.767%	2.151%	1.849%	6,983
Petrale sole	2,502,247	3.000%	75,067	53.767%	1.613%	1.387%	34,706
Sablefish North of 36° N.	6,606,862	3.000%	198,206	53.767%	1.613%	1.387%	91,636
Sablefish South of 36° N.	1,164,834	10.000%	116,483	53.767%	5.377%	4.623%	53,853
Shortspine thornyheads North of 34°27' N.	3,288,084	6.000%	197,285	53.767%	3.226%	2.774%	91,210
Shortspine thornyheads South of 34°27' N.	110,231	6.000%	6,614	53.767%	3.226%	2.774%	3,058
Splitnose rockfish South of 40°10' N.	965,514	10.000%	96,551	53.767%	5.377%	4.623%	44,638
Starry flounder	1,176,166	10.000%	117,617	53.767%	5.377%	4.623%	54,377
Widow rockfish	713,178	5.100%	36,372	53.767%	2.742%	2.358%	16,816
Yelloweye rockfish	406	5.700%	23	53.767%	3.065%	2.635%	11
Yellowtail rockfish North of 40°10' N.	8,189,203	5.000%	409,460	53.767%	2.688%	2.312%	189,304
Total Non-Whiting Non-Halibut QP Sum:	131,854,570	Example Entity's QP Sum:	7,700,338			Example Entity's NEW QP Sum:	3,560,075
		Example Entity's Aggregate Non-Whiting Percentage:	5.840%			Example Entity's NEW Aggregate Non-Whiting Percentage:	2.700%
		Amount Over Limit (2.7%)	3.140%			NEW Amount Over Limit (2.7%)	0.000%

BILLING CODE 3510–22–C

Although in Table 2 widow rockfish is included in the aggregate nonwhiting control limit calculation, widow rockfish QS cannot currently be transferred, pending the potential reallocation of widow QS. As described above, NMFS will not revoke widow rockfish QS since it could be reallocated and therefore the percentage owned by each QS permit owner could change. NMFS brought this issue to the Council in April 2015, noting that QS permit owners who are currently over the aggregate limit, including their QS

percentage of widow rockfish, would need to divest of one or more of the other non-widow species included in the calculation to get under the limit by the deadline. The Council moved to continue to include widow rockfish in the aggregate calculation.

Consequently, NMFS proposes to continue to include widow rockfish in the aggregate nonwhiting control limit calculation (as described in the Council motion), but if any QS permit owner has not divested to get under the aggregate limit by the divestiture deadline, NMFS will revoke some of each IFQ species included in the calculation except for widow rockfish (until reallocation consideration and implementation is completed). As described above, NMFS would divide the amount of the aggregate overage by the aggregate total owned, but hold the QS permit owner's widow QS holdings constant. NMFS would then adjust the proportion used in order to determine how much QS to revoke of the other 27 species in the calculation to bring the permit owner's holdings to the 2.700% limit. The proportion used would be the same for each species, as above, but adjusted to take 0% away from widow and slightly more away from each of the other species included in the aggregate calculation in order to get the permit owner down to the limit. Using the same example as above, but holding widow constant, the proportion used in Table 3 to determine the QS to revoke for each species changes slightly, from 53.767% in Table 2 to 54.023% in Table 3 to bring the permit owner to the 2.700% aggregate limit without revoking any widow rockfish QS.

BILLING CODE 3510–22–P

Table 3. Example of How NMFS Would Revoke QS for an Entity Over the 2.7 Percent Aggregate Nonwhiting Control Limit After the Divestiture Deadline, but Before Widow Reallocation Consideration and Implementation Is Complete.

A	B	C	D	E	F	G	H
IFQ Species	2010 Shorebased Trawl Allocation (lbs)	An Example Entity's QS% - Here Set Equal to Control Limits	Conversion of Individual Entity's QS to Pounds	Overage/Total Owned = (3.140%/5.840%) , Adjusted for Widow	Amount Revoked and Redistributed by NMFS (C*E)	Amount Remaining Owned by Individual (C-G)	Conversion of Individual Entity's Remaining QS to Pounds
Arrowtooth flounder	21,156,441	10.000%	2,115,644	54.023%	5.402%	4.598%	972,710
Bocaccio rockfish South of 40°10' N.	113,287	13.200%	14,954	54.023%	7.131%	6.069%	6,875
Canary rockfish	34,294	4.400%	1,509	54.023%	2.377%	2.023%	694
Chilipepper rockfish South of 40°10' N.	4,046,084	10.000%	404,603	54.023%	5.402%	4.598%	186,025
Cowcod South of 40°10' N.	4,409	17.700%	780	54.023%	9.562%	8.138%	359
Darkblotched rockfish	655,071	4.500%	29,478	54.023%	2.431%	2.069%	13,553
Dover sole	34,546,436	2.600%	898,207	54.023%	1.405%	1.195%	412,969
English sole	20,398,822	5.000%	1,019,941	54.023%	2.701%	2.299%	468,938
Lingcod North of 40°10' N.	3,494,084	2.500%	87,352	54.023%	1.351%	1.149%	40,162
Lingcod South of 40°10' N.	1,283,443	2.500%	32,086	54.023%	1.351%	1.149%	14,752
Longspine thornyheads North of 34°27' N.	4,544,278	6.000%	272,657	54.023%	3.241%	2.759%	125,359
Minor shelf rockfish North of 40°10' N.	543,925	5.000%	27,196	54.023%	2.701%	2.299%	12,504
Minor shelf rockfish South of 40°10' N.	133,526	9.000%	12,017	54.023%	4.862%	4.138%	5,525
Minor slope rockfish North of 40°10' N.	1,950,209	5.000%	97,510	54.023%	2.701%	2.299%	44,832
Minor slope rockfish South of 40°10' N.	869,459	6.000%	52,168	54.023%	3.241%	2.759%	23,985
Other flatfish	9,646,547	10.000%	964,655	54.023%	5.402%	4.598%	443,519
Pacific cod	3,340,003	12.000%	400,800	54.023%	6.483%	5.517%	184,276
Pacific ocean perch North of 40°10' N.	377,577	4.000%	15,103	54.023%	2.161%	1.839%	6,944
Petrale sole	2,502,247	3.000%	75,067	54.023%	1.621%	1.379%	34,514
Sablefish North of 36° N.	6,606,862	3.000%	198,206	54.023%	1.621%	1.379%	91,129
Sablefish South of 36° N.	1,164,834	10.000%	116,483	54.023%	5.402%	4.598%	53,556
Shortspine thornyheads North of 34°27' N.	3,288,084	6.000%	197,285	54.023%	3.241%	2.759%	90,706
Shortspine thornyheads South of 34°27' N.	110,231	6.000%	6,614	54.023%	3.241%	2.759%	3,041
Splitnose rockfish South of 40°10' N.	965,514	10.000%	96,551	54.023%	5.402%	4.598%	44,391
Starry flounder	1,176,166	10.000%	117,617	54.023%	5.402%	4.598%	54,077
Widow rockfish	713,178	5.100%	36,372			5.100%	36,372
Yelloweye rockfish	406	5.700%	23	54.023%	3.079%	2.621%	11
Yellowtail rockfish North of 40°10' N.	8,189,203	5.000%	409,460	54.023%	2.701%	2.299%	188,257
Total Non-Whiting Non-Halibut QP Sum:	131,854,570	Example Entity's QP Sum:	7,700,338			Example Entity's NEW QP Sum:	3,560,035
		Example Entity's Aggregate Non-Whiting Percentage:	5.840%			Example Entity's NEW Aggregate Non-Whiting Percentage:	2.700%
		Amount Over Limit (2.7%)	3.140%			NEW Amount Over Limit (2.7%)	0.000%

BILLING CODE 3510–22–C

NMFS proposes to revoke QS from each of the aggregate IFQ species (nonwhiting, non-halibut) *except* for widow rockfish since it cannot be transferred under current regulations and may be reallocated. NMFS would adjust the proportion in Column E so that the QS permit owner would continue to hold the same amount of widow, but a little less of all other species in order to hold widow constant. The example in Table 3 is speculative, and does not intentionally bear any resemblance to any particular QS owner.

If a QS permit owner was found to exceed the aggregate nonwhiting control limit in 2016 or beyond, NMFS proposes to notify the QS permit owner and provide them 60 days from the time of notification to transfer excess QS. If the QS permit owner still held QS in excess of the aggregate nonwhiting control limit at the end of the 60 day divestiture period, NMFS proposes to revoke the excess QS using the same method described above, and redistribute the excess QS to all other QS permit owners in proportion to their QS holdings on or about January 1 of the following calendar year, based on current ownership records. No person would be allocated an amount of QS that would put that person over an accumulation limit. NMFS will consider the impacts of a reallocation of widow rockfish on the aggregate nonwhiting control limit and potential divestiture methods as part of the forthcoming widow rockfish reallocation proposed rule.

The proposed method would provide NMFS with clear guidance of how to revoke QS from QS permit owners who are over the aggregate nonwhiting control limit as of the November 30, 2015, divestiture deadline or in 2016 and beyond. Because NMFS will strive to make all quota pound allocations to QS permit owners on or about January 1, 2016, and all QS permits must be under the control limits by this time, a clear process will allow NMFS to make any necessary QS revocations and redistributions, and subsequent quota pound allocations, in a timely manner.

Abandonment

As described above, the Council's GAP identified a situation where a QS permit owner who is over the 2.7% aggregate nonwhiting control limit may wish to divest of specific IFQ species, such as starry flounder, that are not fully utilized in the fishery in order to get down to the aggregate limit. However, the QS permit owner may be unable to find another QS permit owner who is willing to purchase or accept as a donation the excess QS of these species. If they still held QS in excess of the aggregate nonwhiting control limit after the November 30, 2015, divestiture deadline, NMFS would proceed with the proportional reduction method previously described, potentially revoking some of all nonwhiting nonhalibut species held by the QS permit owner. At the November 2014 Council meeting, the GAP proposed a process by which QS permit owners in this situation might voluntarily abandon QS of their choosing to NMFS to get under the limits by the divestiture deadline and avoid having QS revoked proportionally. The Council expressed support for this abandonment option at the April 2015 Council meeting.

NMFS proposes the abandonment option recommended by the Council in order to provide additional flexibility for these QS permit owners to come into compliance before the divestiture deadline. NMFS proposes that any QS permit owner who is over the 2.7 percent aggregate nonwhiting control limit and wishes to voluntarily abandon QS do so by notifying NMFS in writing no later than November 15, 2015. NMFS would need enough time to process the letter, make an administrative transfer of the abandoned QS out of the requesting QS permit owner's online QS account prior to the November 30 divestiture deadline, and provide the QS permit owner with a new estimate of their aggregate nonwhiting QS holdings. If the abandonment of QS had not yet gotten the QS permit owner down to the aggregate limit, they would still have time to divest of more QS to other QS permit owners prior to the November 30, 2015, deadline.

NMFS proposes that a written abandonment request include: The QS permit number, IFQ species, and the QS percentage to be abandoned. Either the QS permit owner or an authorized representative of the QS permit owner would be required to sign and date the request. QS permit owners choosing to utilize the abandonment option would permanently relinquish any right to the abandoned QS, and NMFS would redistribute the abandoned QS percentages to all other QS permit owners in proportion to their QS holdings up to the QS and IBQ control limits, based on the most recent ownership interest records. No compensation would be due for any abandoned QS. The QS permit owner would be responsible for ensuring that the abandonment of QS to NMFS would get them under the aggregate nonwhiting control limit; any remaining excess found after the divestiture deadline would be revoked proportionally by NMFS, as described above.

If a QS permit owner was found to exceed the aggregate nonwhiting control limit in 2016 or beyond, NMFS proposes to notify the QS permit owner and provide them 60 days from the time of notification to transfer excess QS, and 30 days from the time of notification to abandon excess QS to NMFS, using the same method described above.

The proposed abandonment method would provide a further option for QS permit owners over the aggregate nonwhiting control limit to come into compliance. Currently, QS permit owners can sell, trade, or give away QS to other QS permit owners in order to reduce their holdings to the QS and IBQ control limits, or wait until the divestiture deadline for NMFS to revoke to these limits. By providing an abandonment option, QS permit owners could abandon QS for species of their choosing to NMFS instead of finding a buyer/recipient or having NMFS revoke proportionally across all nonwhiting nonhalibut species. An abandonment option will not be provided for QS permit owners to get under an individual species control limits since abandonment was intended to allow QS permit owners over the aggregate limit to choose which species to give up.

2015 Implementation Guidance

All QS permit owners and individuals are currently able to divest of any QS (except widow QS) in excess of the QS and IBQ control limits by the November 30, 2015 divestiture deadline. A QS permit owner may sell excess QS in the open QS trading market, donate excess QS to other QS owners of their choosing, or barter. However, in the event that a QS permit owner is found to be in excess of QS and IBQ control limits after the divestiture deadline, NMFS will be required to revoke excess QS. This proposed rule clarifies how NMFS will revoke QS from permit owners who are over an individual species control limit across several QS permits or the aggregate nonwhiting control limit, and provides an abandonment option for those over the aggregate limit. NMFS anticipates that the proposed action could become final in October 2015, which will provide some opportunity for QS owners to use abandonment procedures prior to November 15, 2015.

NMFS sent letters to all QS permit owners who were over one or more of the individual species control limits and/or the aggregate nonwhiting control limit as of July 28, 2015, to allow time and advance notification for divestiture

(and potentially abandonment). NMFS encourages that all QS permit owners divest to the QS and IBQ control limits prior to the divestiture deadline if they want to avoid agency action to ensure that they are under the required control limits. If any QS is revoked, NMFS will send a letter to the QS permit owner with the QS permit in mid-December 2015, describing the species and amount revoked. If any QS is redistributed, NMFS will describe this in a cover letter to all QS permit owners when QS permits are mailed in mid-December 2015.

Future Divestiture Procedures

Similar divestiture measures may be needed in the future for a variety of reasons. For example, if a company changes their ownership structure and a person's QS increases over the control limits as a result, or if the IFQ system inadvertently allows a transfer that puts a QS permit owner over a limit. Accordingly, NMFS proposes to implement for future use, procedures similar to those outlined above. NMFS would notify a QS permit owner that he or she is over a QS or IBQ limit, the QS owner would have 30 days to abandon the excess quota for redistribution by NMFS, or within 30 days of the abandonment deadline, NMFS would revoke excess quota.

Classification

Pursuant to sections 304(b)(1)(a) and 305(d) of the Magnuson-Stevens Act, the NMFS Assistant Administrator has determined that this proposed rule is consistent with the Pacific Coast Groundfish Fishery Management Plan, other provisions of the Magnuson-Stevens Act, and other applicable law, subject to further consideration after public comment.

NMFS is amending the supporting statement for the Pacific Coast groundfish trawl rationalization program permit and license information collection Office of Management and Business (OMB) Paperwork Reduction Act (PRA) requirements (number 0648–0620) to reflect the abandonment protocols described in the preamble to this proposed rule. NMFS requests any comments on the PRA abandonment protocol, including whether those minor paperwork protocols described above would unnecessarily burden any QS owners.

The Office of Management and Budget has determined that this proposed rule is not significant for purposes of Executive Order 12866.

As required by section 603 of the Regulatory Flexibility Act (RFA), an Initial Regulatory Flexibility Analysis (IRFA) was prepared. The IRFA describes the economic impact that this proposed rule, if adopted, would have on small entities. A summary of the analysis follows. A copy of this analysis is available from NMFS. Under the RFA, the term ''small entities'' includes small businesses, small organizations, and small governmental jurisdictions. The Small Business Administration (SBA) has established size criteria for all major industry sectors in the US, including fish harvesting and fish processing businesses. A business primarily involved in finfish harvesting is classified as a small business if it is independently owned and operated, is not dominant in its field of operation (including its affiliates), and has combined annual receipts not in excess of $20.5 million for all its affiliated operations worldwide (13 CFR part 121; August 17, 2015). For commercial shellfish harvesters, the other qualifiers apply and the receipts threshold is $5.5 million. For other commercial marine harvesters, for-hire businesses, and marinas, the other qualifiers apply and the receipts threshold is $7.5 million. A business primarily involved in seafood processing is classified as a small business if it is independently owned and operated, is not dominant in its field of operation (including its affiliates), and has combined annual employment not in excess of 500 employees for all its affiliated operations worldwide. For seafood dealers/wholesalers, the other qualifiers apply and the employment threshold is 100 employees. A small organization is any not-for-profit enterprise which is independently owned and operated and is not dominant in its field. Small governmental jurisdictions are governments of cities, counties, towns, townships, villages, school districts, or special districts, with populations less than 50,000.

At the time of initial implementation of the trawl rationalization program in 2011, NMFS issued QS to several QS permit owners in excess of one or more individual species control limits and/or the aggregate non-whiting control limit, based on their catch history during the qualifying years. Excess QS or IBQ was only meant to be held for a short adjustment period, and regulations require that QS permit owners must divest of any QS in excess of the accumulation limits by November 30, 2015.

The primary purpose of this rule is to describe two methods by which excess quota share will be divested, if QS holders do not or are unable to divest by the deadline. One method will require NMFS to proportionately reduce quota share in situations where a QS holder has excess QS for an individual species but has holding for that species across multiple species. Additionally, the proportional reduction method would be employed by NMFS for persons who have QS holdings that exceed the aggregate non-whiting control limit. A second method of divestiture would allow QS holders to abandon QS to NMFS by formally notifying NMFS of the IFQ species and amounts of QS they wish to divest to comply with the aggregate non-whiting control limit. In both cases, whether QS was revoked or abandoned, NMFS would redistribute excess QS to other QS holders proportionate to their current holdings, up to the accumulation limits for that species and to the aggregate non-whiting control limit.

Under current regulations, quota share (QS) owners in the IFQ program must divest quota shareholdings that exceed individual accumulation limits by November 30, 2015. This proposed action would make minor procedural modifications, described above, to the program regulations to clarify how divestiture of excess quota share could occur. However, the regulations do not currently describe a method for NMFS to revoke shares in two situations: When a business entity or person is over an individual species control limit across several QS permits, and when a business entity or person is over the aggregate non-whiting control limit.

There are two control limits that affect the amount of quota share (QS) or individual bycatch quota (IBQ) a person or entity can own:

Control Limits for Individual Species: These are limits set for each species, and these are fairly straightforward to calculate. For example, the control limit for widow rockfish is 5.1%. If a permit owner has 6%, they are over the individual control limit and must divest 0.9% of widow rockfish. If an individual is an owner or partial owner across many QS permits, he or she must add up their shares across permits to see if they are under the limit. For example: If Joe Dragger has three QS permits: Permit A has 1% of widow rockfish, permit B has 1%, and permit C has 2%, the total widow rockfish owned by this person would be 4%, and would be under the 5.1% control limit.

Aggregate Non-Whiting Control Limit: This limit applies to 28 IFQ species or species groups—all except Pacific whiting and Pacific halibut. There is a total limit of 2.7% that a quota shareholder can own across the non-whiting IFQ species and species groups. This limit is more restrictive than the

sum of individual species limits. The limit is calculated by converting an entity's QS percentages into pounds based on the 2010 optimum yields (OYs), and then dividing those pounds by the total 2010 OY to convert it back to a percentage. For example, if an entity owned 3% of aggregate non-whiting shares, they would be over the limit by 0.3%. In this situation, the entity would need to divest of some shares (of the species and amounts of their choosing) in order to get under or equal to the 2.7% limit.

This rule affects Quota Shareholders in the Pacific Groundfish Trawl Rationalization Fishery. For the years 2011 to 2014, the total IFQ fishery averaged harvests (including discards) of approximately 107,000 mt annually and worth over $52 million in ex-vessel revenues. Ex-vessel revenues in 2014 were over $52 million with a harvest of approximately 117,217 tons. Note that the use of ex-vessel values does not take into account the wholesale or export value of the fishery or the costs of harvesting and processing groundfish into a finished product. The shorebased quota share fishery in 2014 supported 138 quota shareholders that held shares of 30 groundfish species or species groups. Quota pounds are allocated annually based on the sector allocations and the quota share percentages for each species owned by each permit owner. These quota pounds then need to be transferred to vessel accounts to be fished. In 2014, there were 144 IFQ vessel accounts. Vessels fishing under these accounts must carry observers or be participating under an Electronic Monitoring Exempted Fishing Permit. Fish must be landed at a first receiver that has a federal license and the required equipment for all offloads to be monitored and accounted for by a compliance monitor. There is an online electronic database that tracks the trading of quota shares between quota share accounts and the trading of quota pounds and catch and discard amounts in vessel accounts.

NMFS considered various alternatives for this action. Under the status quo/No-Action alternative, NMFS would have no specific regulations in place that detail how NMFS will revoke excess QS when QS holders either cannot or do not divest by the November 30, 2015, deadline if a business or person that is over the individual control limit for an IFQ/IBQ specie(s) across multiple permits or when a business or person is over the aggregate non-whiting control limit.

At the November 2014 Pacific Fishery Management Council Meeting, NMFS noted the upcoming divestiture deadline and proposed an alternative, where specific regulations would provide transparency to the process of revoking excess quota shares in these two situations (Agenda Item J.2.b, NMFS Report, November 2014). The NMFS alternative would provide quota share permit owners with explicit rules so that they would understand how excess QS would be revoked. These rules would aid business planning for current and future quota shareowners.

The Pacific Fishery Management Council's industry advisory group, the Groundfish Advisory Panel (GAP), made suggestions that a better alternative should be shaped. At the April Council Meeting, the GAP made the following statement: ''The GAP reached consensus that forfeiture of quota in excess of caps should be allowed. If forfeiture were not allowed, it could result in a draconian outcome where NMFS takes species in excess pro rata resulting in loss of valuable species. Since there may be little to no demand for some species they may be impossible to divest through the market leaving forfeiture as the only realistic option. (Agenda Item E.6.a, Supplemental GAP Report, April 2014).'' At the November 2014 Council meeting, the Groundfish Advisory Panel made the following suggestion: ''The GAP believes a non-punitive option that allows participants to ''abandon'' quota share should be developed. In some cases, there may be no market for certain IFQ species quota share that needs to be divested. If a participant is unable to transfer that quota share for reasons beyond his control, he should not be penalized. An option that allows the quota to be ''abandoned'' to NMFS should be developed. (Agenda Item J.2.b, Supplemental GAP Report, November 2014) '' The Preferred option provides the ''abandonment option'' plus the application of the proportional reduction method in those instances where no abandonment occurs.

The aggregate limit is based on 28 of the 30 IFQ species (all IFQ species except Pacific whiting and Pacific halibut). Current rules are silent on how NMFS should reduce a Quota Shareholder's portfolio of individual species quota shareholding if they are over the aggregate non-whiting control limit. Therefore, NMFS is seeking public comment on a proposal to determine which individual species are reduced should a quota share owner not take action to reduce his quota shares to get under the limit. Currently there are two ways in which a Quota shareholder can reduce his quota share holdings to get under the aggregate limit—either by sale or by gift to another quota shareholder. There are two mechanisms in this proposed rule for NMFS will determine the amounts of individual species quota shares that need to be reduced. First, NMFS will use written instructions as provided by the quota shareholder that indicates what individual species quota shares are to be abandoned to NMFS for redistribution to other quota shareholders. Absent written instructions, NMFS will reduce each individual species quota share holdings in proportion to the amount of the aggregate overage divided by the aggregate total owned until the aggregate limit is reached.

This proposed rule would have no negative effects on the current industry or on the economy more generally. Current levels of harvest will be left unaffected. The only changes that might happen would be as a result of NMFS reducing quota shareholders who failed to divest their excess shares by November 30, 2015. Should QS holders have excess QS after November 30, 2015, NMFS will revoke the excess QS and redistribute these shares to other quota shareholders up to the control limit. These excess quota shares will be redistributed to all other Quota shareholders on a proportional basis in a manner that their individual and aggregate limits are not exceeded. There may be situations in the future where NMFS ownership information is not current and the QS database fails to block transfers that result in QS holders exceeding their limits. NMFS proposes to continue to use the same rules of reducing excess quota shares.

Quota shareholders are required to report their ownership structure. Annually NMFS collects ownership information at the entity level (corporation, LLC, partnership, trust, nonprofits, publicly held company etc.) and the individual level. Ownership is reported down to a level of 2% ownership. Some quota shareholders hold as many as 13 QS permits. For a given QS permit, the ownership hierarchy may reach to the 7th level. All told, there are an estimated 435 unique entities involved. NMFS reviewed the ownership structure of all the QS permits to the lowest level of ownership. There are nine unique entities over one or more of the individual species control limits, and 3 or less unique entities over the aggregate non-whiting control limit.

The main purpose of this rulemaking is to provide transparency. This rule shows not only how NMFS will calculate excess quota share holding but also how NMFS will proportionately reduce either for an individual species across multiple permits or in cases where someone does not abandon QS

and is over the aggregate limit. Even though there may not be negative effects on the industry, there may be effects on individual entities. For those that are over the individual species control limit, this rule provides transparency on how NMFS has calculated overages. Some quota shareholders may exceed the individual species limit as they are owners or part owners of multiple permits. This rule proposes the process for proportional reduction when a quota shareowner is over an individual limit across permits.

For those entities that are over the aggregate non-whiting control limit, this rule provides transparency but also a process whereby the quota shareholder can direct NMFS on what quota share species should be reduced. With this option, the quota shareholder can direct NMFS to reduce his/her QS for low-valued species to get under the aggregate limit. This option mitigates the economic effect on those quota shareholders over the aggregate limit, should they not be able to sell or gift their shares to another entity.

This process is as follows: QS owners that are over the control limit for aggregate non-whiting QS holdings may voluntarily abandon QS prior to the November 30, 2015, deadline by notifying NMFS in writing by November 15, 2015. The written request must include: QS permit number, IFQ species, and the QS percentage to be abandoned. Either the QS permit owner or an authorized representative of the QS permit owner would be required to sign the request. QS permit owners choosing to utilize the abandonment option would permanently relinquish any right to the abandoned QS, and NMFS would redistribute the abandoned QS percentages to all other QS owners in proportion to their QS holdings, based on ownership records as of January 1, 2016. No compensation would be due for any abandoned shares. If a quota shareholder does not request abandonment and provide NMFS with directions, NMFS will use the proportional reduction methods where proportional amounts of QS for all nonwhiting species are reduced to come into compliance with the aggregate limit. Some of those reductions will include valuable market and bycatch species.

This process may provide some small benefits to the affected quota shareholders. At the moment, the nature of trading is such that NMFS does not have good estimates of the value of a quota share because there has been insufficient information to establish quota share prices. Many trades are multiple species trades, barter trades, or trades among closely affiliated entities. However, the economic effect of allowing those entities the option of giving NMFS instructions on how to dispose of their excess shares can be illustrated with ex-vessel prices. At the low end of the price range are whiting and arrowtooth flounder at about $0.10 a pound each. At the high end of the spectrum are petrale sole and sablefish at $1.13 and $1.98 per lb., respectively. In between these prices are prices for important bycatch species such as canary and yelloweye. Although the ex-vessel prices for these bycatch species may not be high, they are needed to support the target catch. Without this option, NMFS would proportionally revoke quota shares from all species regardless of value if a QS permit owner had not divested voluntarily by the November 30, 2015 deadline. The quota shareholder can direct NMFS to reduce their low-valued species to get under the aggregate limit. This option mitigates the economic effect on those quota shareholders over the aggregate limit, should they not be able to sell or gift their shares to another entity.

NMFS is almost done building a sophisticated ownership database. In the future, when quota share trades are made, the online quota share trading system will have rules that will prevent trades that bring individuals who own QS bring an entity over the aggregate species limit under the first level of ownership. However, in the event that such trading is not prevented because of complex trading and ownership relationships, the rules and processes associated with this rulemaking will apply.

There are 138 quota shareholders potentially directly affected by the aggregate species limits as reductions of excess shares will be taken from the quota share percentages listed on the permit. At the first level of ownership and based on affiliations, there are 96 unique businesses. Even if some first level owners are persons, they are considered businesses for purposes for determining the effects on small businesses. These QS holders must direct the quota pounds to various vessel accounts so that quota pounds can be fished. Quite frequently they also own limited entry permits, the vessels attached to these permits, or processing facilities. As compared to secondary owners or investors, first level quota shareholders are active participants in the fishery, and thus are businesses for purposes of this rule. Also, all quota shareholders when renewing their quota share permits must respond to questions of whether they consider themselves a large or small business. All 138 quota shareholders are businesses. Of these businesses, 15 are large. There are 9 entities affected by the control limit for one or more individual species. These entities are affected only in the sense that NMFS is showing how it will calculate excess shares across multiple permits. There are 3 or less affected entities by the aggregate species limit divestiture rules. When combined, there are 9 unique entities affected by this rule—7 small and 2 large.

NMFS believes that are no significant alternatives to the proposed rule that accomplish the stated objectives of applicable statutes and that minimize any of the significant economic impacts of the proposed rule on small entities. There are no relevant Federal rules that may duplicate, overlap, or conflict with this action. NMFS believes this proposed rule would not adversely affect small entities. Nonetheless, NMFS has prepared this IRFA. Through the rulemaking process associated with this action, we are requesting comments on these conclusions.

This proposed rule was developed after meaningful collaboration, through the Council process, with the tribal representative on the Council. The proposed regulations have no direct effect on the tribes.

List of Subjects in 50 CFR Part 660

Fisheries, Fishing, Indian fisheries.

Dated: August 26, 2015.

Eileen Sobeck,

Assistant Administrator for Fisheries, National Marine Fisheries Service.

For the reasons set out in the preamble, 50 CFR part 660 is proposed to be amended as follows:

PART 660—FISHERIES OFF WEST COAST STATES

■ 1. The authority citation for part 660 continues to read as follows:

Authority: 16 U.S.C. 1801 *et seq.*, 16 U.S.C. 773 *et seq.*, and 16 U.S.C. 7001 *et seq.*

■ 1. In § 660.140, revise paragraph (d)(4)(v) to read as follows:

§ 660.140 Shorebased IFQ Program.

* * * * *

(d) * * *

(4) * * *

(v) *Divestiture.* Accumulation limits will be calculated by first calculating the aggregate non-whiting QS limit and then the individual species QS or IBQ control limits. For QS permit owners (including any person who has ownership interest in the owner named on the permit) that are found to exceed the accumulation limits during the initial issuance of QS permits, an

adjustment period will be provided during which they will have to completely divest their QS or IBQ in excess of the accumulation limits. QS or IBQ will be issued for amounts in excess of accumulation limits only for owners of limited entry permits as of November 8, 2008, if such ownership has been registered with NMFS by November 30, 2008. The owner of any permit acquired after November 8, 2008, or if acquired earlier, not registered with NMFS by November 30, 2008, will only be eligible to receive an initial allocation for that permit of those QS or IBQ that are within the accumulation limits; any QS or IBQ in excess of the accumulation limits will be redistributed to the remainder of the initial recipients of QS or IBQ in proportion to each recipient's initial allocation of QS or IBQ for each species. Any person that qualifies for an initial allocation of QS or IBQ in excess of the accumulation limits will be allowed to receive that allocation, but must divest themselves of the QS (except for widow rockfish QS) or IBQ in excess of the accumulation limits by November 30, 2015, according to the procedure provided under paragraph (d)(4)(v)(A) of this section. If NMFS identifies that a QS permit owner exceeds the accumulation limits in 2016 or beyond, the QS permit owner must divest of the QS or IBQ in excess of the accumulation limits according to the procedure provided under paragraph (d)(4)(v)(B) of this section. Owners of QS or IBQ in excess of the control limits may receive and use the QP or IBQ pounds associated with that excess, up to the time their divestiture is completed.

(A) *Divestiture and redistribution process in 2015.* QS permit owners in excess of the control limit for aggregate nonwhiting QS holdings may abandon QS to NMFS by November 15, 2015 using the procedure provided under paragraph (d)(4)(v)(C) of this section. QS permit owners must divest themselves of any QS or IBQ in excess of the accumulation limits by November 30, 2015, except for widow rockfish QS, which cannot be transferred as described in paragraph (d)(3)(ii)(B)(2) of this section. After the November 30, 2015 divestiture deadline, NMFS will revoke all QS or IBQ held by a person (including any person who has ownership interest in the owner names on the permit) in excess of the accumulation limits following the procedures specified under paragraphs (d)(4)(v)(D) through (G) of this section. All abandoned or revoked shares will be redistributed to all other QS permit owners in proportion to their QS or IBQ holdings on or about January 1, 2016, based on current ownership records, except that no person will be allocated an amount of QS or IBQ that would put that person over an accumulation limit.

(B) *Divestiture and redistribution process in 2016 and beyond.* Any person owning or controlling QS or IBQ must comply with the accumulation limits, even if that control is not reflected in the ownership records available to NMFS as specified under paragraphs (d)(4)(i) and (iii) of this section. If NMFS identifies that a QS permit owner exceeds an accumulation limit in 2016 or beyond, NMFS will notify the QS permit owner that he or she has 60 days to divest of the excess QS or IBQ. In the case that a QS permit owner exceeds the control limit for aggregate nonwhiting QS holdings, the QS permit owner may abandon QS to NMFS within 30 days of the notification by NMFS, using the procedure provided under paragraph (d)(4)(v)(C) of this section. After the 60-day divestiture period, NMFS will revoke all QS or IBQ held by a person (including any person who has ownership interest in the owner names on the permit) in excess of the accumulation limits following the procedures specified under paragraphs (d)(4)(v)(D) through (G) of this section. All abandoned or revoked shares will be redistributed to all other QS permit owners in proportion to their QS or IBQ holdings on or about January 1 of the following calendar year, based on current ownership records, except that no person will be allocated an amount of QS or IBQ that would put that person over an accumulation limit.

(C) *Abandonment of QS.* QS permit owners that are over the control limit for aggregate nonwhiting QS holdings may voluntarily abandon QS if they notify NMFS in writing by the applicable deadline specified under paragraph (d)(4)(v)(A) or (B) of this section. The written abandonment request must include the following information: QS permit number, IFQ species, and the QS percentage to be abandoned. Either the QS permit owner or an authorized representative of the QS permit owner must sign the request. QS permit owners choosing to utilize the abandonment option will permanently relinquish to NMFS any right to the abandoned QS, and the QS will be redistributed as described under paragraph (d)(4)(v)(A) or (B) of this section. No compensation will be due for any abandoned shares.

(D) *Revocation.* NMFS will revoke QS from any QS permit owner who exceeds an accumulation limit after the divestiture deadline specified under paragraph (d)(4)(v)(A) or (B) of this section. NMFS will follow the revocation approach summarized in the following table and explained under paragraphs (d)(4)(v)(E) through (G) of this section:

If, after the divestiture deadline, a QS permit owner exceeds . . .	*Then . . .*
An individual species control limit (non-widow until reallocation is complete) in *one* QS permit.	NMFS will revoke excess QS at the species level.
An individual species control limit (non-widow until reallocation is complete) across *multiple* QS permits.	NMFS will revoke QS at the species level in proportion to the amount the QS percentage from each permit contributes to the total QS percentage owned.
The control limit for aggregate nonwhiting QS holdings	NMFS will revoke QS at the species level in proportion to the amount of the aggregate overage divided by the aggregate total owned. Until widow reallocation is complete, the proportion will be adjusted to hold widow QS at a constant level while bringing the aggregate percentage owned to 2.700%, using normal rounding rules.

(E) *Revocation of excess QS or IBQ from one QS permit.* In cases where a person has not divested to the control limits for individual species (non-widow until reallocation is complete) in one QS permit by the deadline specified under paragraph (d)(4)(v)(A) or (B) of this section, NMFS will revoke excess QS at the species level in order to get that person to the limits. NMFS will redistribute the revoked QS following the process specified in paragraph (d)(4)(v)(A) or (B) of this section. No compensation will be due for any revoked shares.

(F) *Revocation of excess QS or IBQ from multiple QS permits.* In cases where a person has not divested to the control limits for individual species (non-widow QS until reallocation is

complete) across QS permits by the deadline specified under paragraph (d)(4)(v)(A) or (B) of this section, NMFS will revoke QS at the species level in proportion to the amount the QS percentage from each permit contributes to the total QS percentage owned. NMFS will redistribute the revoked QS following the process specified in paragraph (d)(4)(v)(A) or (B) of this section. No compensation will be due for any revoked shares.

(G) *Revocation of QS in excess of the control limit for aggregate nonwhiting QS holdings.* In cases where a QS permit owner has not divested to the control limit for aggregate nonwhiting QS holdings by the deadline specified under paragraph (d)(4)(v)(A) or (B) of this section, NMFS will revoke QS at the species level in proportion to the amount of the aggregate overage divided by the aggregate total owned. Until widow reallocation is complete and transfer of widow is allowed, widow will continue to be included in the aggregate calculation, but the proportion will be adjusted to hold widow QS at a constant level while bringing the aggregate percentage owned to 2.700%, using normal rounding rules. NMFS will redistribute the revoked QS following the process in paragraph (d)(4)(v)(A) or (B) of this section. No compensation will be due for any revoked shares.

* * * * *

[FR Doc. 2015–21786 Filed 9–1–15; 8:45 am]

BILLING CODE 3510–22–P

Notices

Federal Register

Vol. 80, No. 170

Wednesday, September 2, 2015

This section of the FEDERAL REGISTER contains documents other than rules or proposed rules that are applicable to the public. Notices of hearings and investigations, committee meetings, agency decisions and rulings, delegations of authority, filing of petitions and applications and agency statements of organization and functions are examples of documents appearing in this section.

DEPARTMENT OF AGRICULTURE

Animal and Plant Health Inspection Service

[Docket No. APHIS–2014–0076]

J.R. Simplot Co.; Determination of Nonregulated Status of Potato Genetically Engineered for Late Blight Resistance, Low Acrylamide Potential, Reduced Black Spot Bruising, and Lowered Reducing Sugars

AGENCY: Animal and Plant Health Inspection Service, USDA.

ACTION: Notice.

SUMMARY: We are advising the public of our determination that Innate™ Potato designated as Russet Burbank event W8, which has been genetically engineered for late blight resistance, low acrylamide potential, reduced black spot bruising, and lowered reducing sugars, is no longer considered a regulated article under our regulations governing the introduction of certain genetically engineered organisms. Our determination is based on our evaluation of data submitted by J.R. Simplot Company, in its petition for a determination of nonregulated status, our analysis of available scientific data, and comments received from the public in response to our previous notices announcing the availability of the petition for nonregulated status and its associated environmental assessment and plant pest risk assessment. This notice also announces the availability of our written determination and finding of no significant impact.

DATES: Effective September 2, 2015.

ADDRESSES: You may read the documents referenced in this notice and the comments we received at *http://www.regulations.gov/#!docketDetail;D=APHIS-2014-0076* or in our reading room, which is located in room 1141 of the USDA South Building, 14th Street and Independence Avenue SW., Washington, DC. Normal reading room hours are 8 a.m. to 4:30 p.m., Monday through Friday, except holidays. To be sure someone is there to help you, please call (202) 799–7039 before coming.

Supporting documents are also available on the APHIS Web site at *http://www.aphis.usda.gov/biotechnology/petitions_table_pending.shtml* under APHIS Petition Number 14–093–01p.

FOR FURTHER INFORMATION CONTACT: Dr. John Turner, Director, Environmental Risk Analysis Programs, Biotechnology Regulatory Services, APHIS, 4700 River Road Unit 147, Riverdale, MD 20737–1236; (301) 851–3954, email: *john.t.turner@aphis.usda.gov.* To obtain copies of the supporting documents for this petition, contact Ms. Cindy Eck at (301) 851–3892, email: *cynthia.a.eck@aphis.usda.gov.*

SUPPLEMENTARY INFORMATION: The regulations in 7 CFR part 340, ''Introduction of Organisms and Products Altered or Produced Through Genetic Engineering Which Are Plant Pests or Which There Is Reason to Believe Are Plant Pests,'' regulate, among other things, the introduction (importation, interstate movement, or release into the environment) of organisms and products altered or produced through genetic engineering that are plant pests or that there is reason to believe are plant pests. Such genetically engineered (GE) organisms and products are considered ''regulated articles.''

The regulations in § 340.6(a) provide that any person may submit a petition to the Animal and Plant Health Inspection Service (APHIS) seeking a determination that an article should not be regulated under 7 CFR part 340. APHIS received a petition (APHIS Petition Number 14–093–01p) from J.R. Simplot Company (Simplot) of Boise, ID, seeking a determination of nonregulated status of potatoes (*Solanum tuberosum*) designated as Innate™ W8, which have been genetically engineered for late blight resistance, to express low acrylamide potential, reduced black spot bruising, and lowered reducing sugars. Acrylamide is a human neurotoxicant and potential carcinogen that may form in potatoes and other starchy foods under certain cooking conditions. The petition states that these potatoes are unlikely to pose a plant pest risk and, therefore, should not be a regulated article under APHIS' regulations in 7 CFR part 340.

According to our process [1] for soliciting public comment when considering petitions for determinations of nonregulated status of GE organisms, APHIS accepts written comments regarding a petition once APHIS deems it complete. In a notice [2] published in the **Federal Register** on November 10, 2014 (79 FR 66689–66690, Docket No. APHIS–2014–0076), APHIS announced the availability of the Simplot petition for public comment. APHIS solicited comments on the petition for 60 days ending on January 9, 2015, in order to help identify potential environmental and interrelated economic issues and impacts that APHIS may determine should be considered in our evaluation of the petition.

APHIS received 130 comments on the petition; one of these comments included electronic attachments consisting of a consolidated document of many identical or nearly identical letters, for a total of 22,673 comments. Issues raised during the comment period include contamination of conventional potato production, the potential for disruption of trade due to the presence of unwanted genetically engineered commodities in exports, the need for more research prior to approval of the petition, the potential for negative impacts to plant fitness and the environment, and human health concerns. APHIS decided, based on its review of the petition and its evaluation and analysis of the comments received during the 60-day public comment period on the petition, that the petition involves a GE organism that raises substantive new issues. According to our public review process for such petitions (see footnote 1), APHIS first solicits written comments from the public on a draft environmental assessment (EA) and a preliminary plant

[1] On March 6, 2012, APHIS published in the **Federal Register** (77 FR 13258–13260, Docket No. APHIS–2011–0129) a notice describing our public review process for soliciting public comments and information when considering petitions for determinations of nonregulated status for GE organisms. To view the notice, go to *http://www.regulations.gov/#!docketDetail;D=APHIS-2011-0129.*

[2] To view the notice, the petition, the comments we received, and other supporting documents, go to *http://www.regulations.gov/#!docketDetail;D=APHIS-2014-0076.*

pest risk assessment (PPRA) for a 30-day comment period through the publication of a **Federal Register** notice. Then, after reviewing and evaluating the comments on the draft EA and the preliminary PPRA and other information, APHIS revises the PPRA as necessary and prepares a final EA and, based on the final EA, a National Environmental Policy Act (NEPA) decision document (either a finding of no significant impact (FONSI) or a notice of intent to prepare an environmental impact statement). If a FONSI is reached, APHIS furnishes a response to the petitioner, either approving or denying the petition. APHIS also publishes a notice in the **Federal Register** announcing the regulatory status of the GE organism and the availability of APHIS' final EA, PPRA, FONSI, and our regulatory determination.

APHIS sought public comment on a draft EA, a preliminary PPRA, and whether the subject potatoes are likely to pose a plant pest risk from May 5, 2015, to June 4, 2015.[3] APHIS received 24 comments on the petition. Nineteen comments supported the determination of nonregulated status, and five comments did not support the determination of nonregulated status. The majority of the comments opposing the determination expressed general opposition to APHIS making a determination of nonregulated status of GE organisms. Issues raised during the comment period included concerns regarding the potential for disruption of trade and potential human health and environmental impacts. APHIS has addressed the issues raised during the comment period and has provided responses to comments as an attachment to the FONSI.

National Environmental Policy Act

After reviewing and evaluating the comments received during the comment period on the draft EA and preliminary PPRA and other information, APHIS has prepared a final EA. The EA has been prepared to provide the public with documentation of APHIS' review and analysis of any potential environmental impacts associated with the determination of nonregulated status of Simplot's Innate™ W8 potato. The EA was prepared in accordance with: (1) NEPA, as amended (42 U.S.C. 4321 *et seq.*), (2) regulations of the Council on Environmental Quality for implementing the procedural provisions of NEPA (40 CFR parts 1500–1508), (3) USDA regulations implementing NEPA (7 CFR part 1b), and (4) APHIS' NEPA Implementing Procedures (7 CFR part 372). Based on our EA, the response to public comments, and other pertinent scientific data, APHIS has reached a FONSI with regard to the preferred alternative identified in the EA (to make a determination of nonregulated status of Innate™ W8 potatoes).

Determination

Based on APHIS' analysis of field and laboratory data submitted by Simplot, references provided in the petition, peer-reviewed publications, information analyzed in the EA, the PPRA, comments provided by the public, and information provided in APHIS' response to those public comments, APHIS has determined that Simplot's Innate™ Potato designated as Russet Burbank event W8 is unlikely to pose a plant pest risk and therefore is no longer subject to our regulations governing the introduction of certain GE organisms.

Copies of the signed determination document, PPRA, final EA, FONSI, and response to comments, as well as the previously published petition and supporting documents, are available as indicated in the **ADDRESSES** and **FOR FURTHER INFORMATION CONTACT** sections of this notice.

Authority: 7 U.S.C. 7701–7772 and 7781–7786; 31 U.S.C. 9701; 7 CFR 2.22, 2.80, and 371.3.

Done in Washington, DC, this 28th day of August 2015.

Kevin Shea,

Administrator, Animal and Plant Health Inspection Service.

[FR Doc. 2015–21747 Filed 9–1–15; 8:45 am]

BILLING CODE 3410–34–P

[3] 80 FR 25660–25661.

DEPARTMENT OF COMMERCE

Census Bureau

Proposed Information Collection; Comment Request; Special Census Program

AGENCY: U.S. Census Bureau, Commerce.

ACTION: Notice.

SUMMARY: The Department of Commerce, as part of its continuing effort to reduce paperwork and respondent burden, invites the general public and other Federal agencies to take this opportunity to comment on proposed and/or continuing information collections, as required by the Paperwork Reduction Act of 1995, Public Law 104–13 (44 U.S.C. 3506(c)(2)(A)).

DATES: To ensure consideration, written comments must be submitted on or before November 2, 2015.

ADDRESSES: Direct all written comments to Jennifer Jessup, Departmental Paperwork Clearance Officer, Department of Commerce, Room 6616, 14th and Constitution Avenue NW., Washington, DC 20230 (or via the Internet at *jjessup@doc.gov*).

FOR FURTHER INFORMATION CONTACT: Direct all requests for additional information, or copies of the information collection instrument(s), and instructions to Michael A. Hall, Bureau of the Census, 4600 Silver Hill Road, Field Division, Special Census Branch, Location 5H149, Washington, DC 20233 and/or call (301) 763–1429.

SUPPLEMENTARY INFORMATION:

I. Abstract

The Special Census Program is a reimbursable service offered and performed by the Census Bureau for the government of any state, county, city, or other political subdivision within a state. This includes the District of Columbia, the government of any possession or area over which the U.S. exercises jurisdiction, control, or sovereignty, and other governmental units that require current population data between decennial censuses.

Many states use Special Census population statistics to determine the distribution of funds to local jurisdictions. The local jurisdictions may also use the data to plan new schools, transportation systems, housing programs, or water treatment facilities.

The Census Bureau will use the following forms to conduct the various Special Census operations:

SC–1, Special Census Enumerator Questionnaire—This interview form will be used to collect special census data at regular housing units (HU), and eligible units in Transient Locations (TL) such as RV parks, marinas, campgrounds, hotels or motels.

SC–1(SUPP), Continuation Form for Enumerator Questionnaires—This interview form will be used to collect special census data at a regular HU or eligible units in a TL, when there are more than five members in a household.

SC–1 (Phone/WYC), Special Census Enumeration Questionnaire—This interview form will be used to collect special census data when a respondent calls the local special census office.

SC–2, Group Quarters Questionnaire—This interview form will be used to collect special census data at group quarters (GQ) such as hospitals, prisons, boarding and rooming houses, college dormitories, military facilities, and convents.

SC–3 (RI), Enumeration Reinterview Form—This is a quality assurance form used by enumerators to conduct an independent interview at a sample of HUs. Special Census office staff will compare the data collected on this form with the original interview to make sure the original enumerator followed procedures.

SC–116, Group Quarters Enumeration Control Sheet—This page will be used by Special Census enumerators to list residents/clients at GQs.

SC–117, TL Enumeration Record—This forms will be used by office staff to collect contact information and schedule interviews for TLs, to determine the type of TL, and to estimate the number of interviews to be conducted.

SC–351, Group Quarters Initial Contact Checklist—This checklist will be used by enumerators to collect contact information and to determine the type of GQ.

SC–920, Address Listing Page- This page will include existing addresses from the MAF. Special Census enumerators will update these addresses, if needed, at the time of enumeration.

SC–921(HU), Housing Unit Add Page—This page will be used by enumerators to add HUs that are observed to exist on the ground, that are not contained on the address listing page.

SC–921(GQ), Group Quarter Add Page—This page will be used by enumerators to add GQs that are observed to exist on the ground, that are not contained on the address listing page.

SC–1(F), Information Sheet, and the Confidentiality Notice—This notice is required by the Privacy Act of 1974. Special Census field staff are required by law to give an Information Sheet to each person from whom they request census-related information.

The Special Census Program will include a library of forms and the operational procedures used for the many Special Censuses we anticipate conducting this decade. The Census Bureau will establish a reimbursable agreement with a variety of potential special census customers that are unknown at this time. No additional documentation will be provided to OMB in advance of conducting any Special Census utilizing the library of standard forms and procedures. However, any deviation from the standard forms or procedures, such as asking additional questions, will be submitted to OMB for approval. The Special Census program will provide OMB an annual report summarizing the activity under the clearance for the year.

II. Method of Collection

The Special Census Program will use the Census 2010 Update/Enumerate (U/E) methodology. Enumerators will canvass their assigned areas, with an address register that contains addresses obtained from the MAF. Special Census enumerators will update the address information as needed, based on their observation of HUs, TLs or GQs that exist on the ground. Additionally, enumerators will interview households at regular HUs, eligible units at TLs, and residents at GQs using the appropriate Special Census forms.

III. Data

OMB Control Number: 0607–0368.

Form Number: SC–1, SC–1(SUPP), SC–1(Phone/WYC), SC–2, SC–3(RI), SC–116, SC–117, SC–351, SC–920, SC–921(HU), SC–921(GQ), SC–1(F).

Type of Review: Regular submission.

Affected Public: Individual households, businesses, and for profit and not-for-profit institutions.

Estimated Number of Respondents: 248,430.

Estimated Time per Response: approximately 13 minutes.

Estimated Total Annual Burden Hours: 53,527.

Estimated Total Cost: There is no cost to respondents other than their time.

Respondents Obligation: Voluntary.

Legal Authority: Title 13 U.S.C. Section 196.

IV. Request for Comments

Comments are invited on: (a) Whether the proposed collection of information is necessary for the proper performance of the functions of the agency, including whether the information shall have practical utility; (b) the accuracy of the agency's estimate of the burden (including hours and cost) of the proposed collection of information; (c) ways to enhance the quality, utility, and clarity of the information to be collected; and (d) ways to minimize the burden of the collection of information on respondents, including through the use of automated collection techniques or other forms of information technology.

Comments submitted in response to this notice will be summarized and/or included in the request for OMB approval of this information collection; they also will become a matter of public record.

Dated: August 27, 2015.

Glenna Mickelson,

Management Analyst, Office of the Chief Information Officer.

[FR Doc. 2015–21663 Filed 9–1–15; 8:45 am]

BILLING CODE 3510–07–P

DEPARTMENT OF COMMERCE

Foreign-Trade Zones Board

[B–56–2015]

Foreign-Trade Zone 182—Fort Wayne, Indiana, Application for Reorganization, (Expansion of Service Area), Under Alternative Site Framework

An application has been submitted to the Foreign-Trade Zones (FTZ) Board by the City of Fort Wayne, grantee of Foreign-Trade Zone 182, requesting authority to reorganize the zone to expand its service area under the alternative site framework (ASF) adopted by the FTZ Board (15 CFR 400.2(c)). The ASF is an option for grantees for the establishment or reorganization of zones and can permit significantly greater flexibility in the designation of new subzones or ''usage-driven'' FTZ sites for operators/users located within a grantee's ''service area'' in the context of the FTZ Board's standard 2,000-acre activation limit for a zone. The application was submitted pursuant to the Foreign-Trade Zones Act, as amended (19 U.S.C. 81a–81u), and the regulations of the FTZ Board (15 CFR part 400). It was formally docketed on August 25, 2015.

FTZ 182 was approved by the Board on December 23, 1991 (Board Order 549, 57 FR 1450, 1/14/1992), reorganized under the ASF on June 22, 2011 (Board Order 1770, 78 FR 39070, 7/5/2011) and its ASF service area was expanded on January 2, 2014 (Board Order 1927, 79 FR 2410, 1/14/2014). The zone currently has a service area that includes Adams, Allen, Blackford, DeKalb, Huntington, Jay, LaGrange, Noble, Steuben, Wabash, Wells and Whitley Counties.

The applicant is now requesting authority to expand the service area of the zone to include Randolph County, Indiana, as described in the application. If approved, the grantee would be able to serve sites throughout the expanded service area based on companies' needs for FTZ designation. The application indicates that the proposed expanded service area is adjacent to the Indianapolis and Dayton Customs and Border Protection Ports of Entry.

In accordance with the FTZ Board's regulations, Elizabeth Whiteman of the FTZ Staff is designated examiner to

evaluate and analyze the facts and information presented in the application and case record and to report findings and recommendations to the FTZ Board.

Public comment is invited from interested parties. Submissions shall be addressed to the FTZ Board's Executive Secretary at the address below. The closing period for their receipt is November 2, 2015. Rebuttal comments in response to material submitted during the foregoing period may be submitted during the subsequent 15-day period to November 16, 2015.

A copy of the application will be available for public inspection at the Office of the Executive Secretary, Foreign-Trade Zones Board, Room 21013, U.S. Department of Commerce, 1401 Constitution Avenue NW., Washington, DC 20230–0002, and in the ''Reading Room'' section of the FTZ Board's Web site, which is accessible via *www.trade.gov/ftz.* For further information, contact Elizabeth Whiteman at *Elizabeth.Whiteman@trade.gov* or (202) 482–0473.

Dated: August 25, 2015.

Andrew McGilvray,

Executive Secretary.

[FR Doc. 2015–21768 Filed 9–1–15; 8:45 am]

BILLING CODE 3510–DS–P

DEPARTMENT OF COMMERCE

International Trade Administration

[A–337–804; A–533–813; A–560–802; A–570–851]

Certain Preserved Mushrooms From Chile, India, Indonesia and the People's Republic of China: Continuation of the Antidumping Duty Orders

AGENCY: Enforcement and Compliance, International Trade Administration, Department of Commerce.

SUMMARY: As a result of the determinations by the Department of Commerce (the Department) and the International Trade Commission (ITC) in their five year (sunset) reviews that revocation of the antidumping duty (AD) orders on certain preserved mushrooms (mushrooms) from Chile, India, Indonesia and the People's Republic of China (PRC) would likely lead to a continuation or recurrence of dumping and material injury to an industry in the United States, the Department is publishing a notice of continuation of the AD orders on mushrooms from Chile, India, Indonesia, and the PRC.

DATES: *Effective Date:* September 2, 2015.

FOR FURTHER INFORMATION CONTACT: Terre Keaton Stefanova or Katherine Johnson, AD/CVD Operations, Office II, Enforcement and Compliance, International Trade Administration, U.S. Department of Commerce, 14th Street & Constitution Avenue NW., Washington, DC 20230; telephone: (202) 482–1280 or (202) 482–4929, respectively.

SUPPLEMENTARY INFORMATION:

Background

On March 2, 2015, the Department initiated [1] and the ITC instituted [2] five-year (sunset) reviews of the AD orders on mushrooms from Chile, India, Indonesia and the PRC, pursuant to section 751(c) and 752 of the Tariff Act of 1930, as amended (the Act). As a result of its reviews, the Department determined that revocation of the AD orders on mushrooms from Chile, India, Indonesia and the PRC would likely lead to a continuation or recurrence of dumping. Therefore, the Department notified the ITC of the magnitude of the margins of dumping likely to prevail were the orders revoked.[3]

On August 24, 2015, the ITC published its determination, pursuant to sections 751(c) and 752(a) of the Act, that revocation of the AD orders on mushrooms from Chile, India, Indonesia and the PRC would likely lead to a continuation or recurrence of material injury to an industry in the United States within a reasonably foreseeable time.[4]

Scope of the Orders

The merchandise subject to the orders is certain preserved mushrooms, whether imported whole, sliced, diced, or as stems and pieces. The preserved mushrooms covered under these orders are the species Agaricus bisporus and Agaricus bitorquis. ''Preserved mushrooms'' refer to mushrooms that have been prepared or preserved by cleaning, blanching, and sometimes slicing or cutting. These mushrooms are then packed and heated in containers including but not limited to cans or glass jars in a suitable liquid medium, including but not limited to water, brine, butter or butter sauce. Preserved mushrooms may be imported whole, sliced, diced, or as stems and pieces. Included within the scope of these orders are ''brined'' mushrooms, which are presalted and packed in a heavy salt solution to provisionally preserve them for further processing.

Excluded from the scope of these orders are the following: (1) All other species of mushroom, including straw mushrooms; (2) all fresh and chilled mushrooms, including ''refrigerated'' or ''quick blanched mushrooms''; (3) dried mushrooms; (4) frozen mushrooms; and (5) ''marinated,'' ''acidified'' or ''pickled'' mushrooms, which are prepared or preserved by means of vinegar or acetic acid, but may contain oil or other additives.

The merchandise subject to the orders is classifiable under subheadings: 2003.10.0127, 2003.10.0131, 2003.10.0137, 2003.10.0143, 2003.10.0147, 2003.10.0153, 0711.51.0000, 0711.90.4000, 2003.10.0027, 2003.10.0031, 2003.10.0037, 2003.10.0043 and 2003.10.0047 of the Harmonized Tariff Schedule of the United States (HTSUS). Although the HTSUS subheadings are provided for convenience and customs purposes, our written description of the scope of these orders is dispositive.

Continuation of the AD Orders

As a result of the determinations by the Department and the ITC that revocation of the AD orders on mushrooms from Chile, India, Indonesia and the PRC would likely lead to a continuation or recurrence of dumping, and material injury to an industry in the United States, pursuant to sections 751(c) and 751(d)(2) of the Act, the Department hereby orders the continuation of the AD orders on mushrooms from Chile, India, Indonesia and the PRC. U.S. Customs and Border Protection (CBP) will continue to collect AD cash deposits at the rates in effect at the time of entry for all imports of subject merchandise. The effective date of the continuation of the orders will be the date of publication in the **Federal Register** of this notice of continuation. Pursuant to section 751(c)(2) of the Act, the Department intends to initiate the next five-year review of these orders not later than 30 days prior to the fifth anniversary of the effective date of continuation.

Administrative Protective Order

This notice also serves as the only reminder to parties subject to administrative protective order (APO) of their responsibility concerning the return/destruction or conversion to judicial protective order of proprietary

[1] *See Initiation of Five-Year (''Sunset'') Review*, 80 FR 11164 (March 2, 2015).

[2] *See Preserved Mushrooms From Chile, China, India, and Indonesia; Institution of Five-Year Reviews*, 80 FR 11221 (March 2, 2015).

[3] *See Certain Preserved Mushrooms from Chile, India, Indonesia and the People's Republic of China: Final Results of Expedited Third Sunset Reviews of the Antidumping Duty Orders*, 80 FR 39053 (July 8, 2015).

[4] *See Preserved Mushrooms From Chile, China, India, and Indonesia; Determination*, 80 FR 51310 (August 24, 2015).

information disclosed under APO in accordance with 19 CFR 351.305(a)(3). Failure to comply is a violation of the APO which may be subject to sanctions.

These five-year (sunset) reviews and notice are in accordance with sections 751(c) and (d)(2), and 777(i) the Act, and 19 CFR 351.218(f)(4).

Dated: August 27, 2015.

Paul Piquado,

Assistant Secretary for Enforcement and Compliance.

[FR Doc. 2015–21771 Filed 9–1–15; 8:45 am]

BILLING CODE 3510–DS–P

DEPARTMENT OF COMMERCE

International Trade Administration

[A–570–928]

Uncovered Innerspring Units From the People's Republic of China: Final Results of Antidumping Duty Administrative Review; 2013–2014

AGENCY: Enforcement and Compliance, International Trade Administration, Department of Commerce.

SUMMARY: On February 23, 2015, the Department of Commerce (''the Department'') published in the **Federal Register** the preliminary results of the administrative review of the antidumping duty order on uncovered innerspring units (''innersprings'') from the People's Republic of China (''PRC'') covering the period February 1, 2013, through January 31, 2014.[1] The Department gave interested parties an opportunity to comment on the *Preliminary Results.* Based on our analysis of these comments, our final results remain unchanged from the *Preliminary Results.*

DATES: *Effective Date:* September 2, 2015.

FOR FURTHER INFORMATION CONTACT: Kenneth Hawkins, AD/CVD Operations, Office V, Enforcement and Compliance, International Trade Administration, U.S. Department of Commerce, 14th Street and Constitution Avenue NW., Washington, DC 20230; telephone: (202) 482–6491.

SUPPLEMENTARY INFORMATION:

Background

This review covers two exporters of subject merchandise: Comfort Coil Technology Sdn Bhd (''Comfort Coil'') and Creative Furniture & Bedding Manufacturing (''Creative Furniture''). On February 23, 2015, the Department published the *Preliminary Results* in the **Federal Register,** and provided interested parties an opportunity to comment.[2] On March 25, 2015, the Department received a case brief from Leggett and Platt, Inc. (''Petitioner'').[3] No other interested party filed case or rebuttal briefs.

Scope of the Order

The merchandise subject to the order is uncovered innerspring units.[4] The product is currently classified under subheading 9404.29.9010 and has also been classified under subheadings 9404.10.0000, 7326.20.0070, 7320.20.5010, or 7320.90.5010, of the Harmonized Tariff Schedule of the United States (''HTSUS''). The HTSUS subheadings are provided for convenience and customs purposes only; the written product description of the scope of the order is dispositive.

Analysis of Comments Received

All issues raised in Petitioner's case brief are addressed in the Issues and Decision Memorandum, which is incorporated herein by reference. A list of the issues which parties raised, and to which we respond in the Issues and Decision Memorandum, is attached to this notice as an Appendix. The Issues and Decision Memorandum is a public document and is on file electronically via Enforcement and Compliance's Antidumping and Countervailing Duty Centralized Electronic Service System (''ACCESS''). ACCESS is available to registered users at *http://access.trade.gov,* and it is available to all parties in the Central Records Unit, room B8024 of the main Department of Commerce building. In addition, a complete version of the Issues and Decision Memorandum can be accessed directly on the internet at *http://enforcement.trade.gov/frn/index.html.* The signed Issues and Decision Memorandum and the electronic versions of the Issues Decision Memorandum are identical in content.

Use of Facts Available and Adverse Facts Available

In the *Preliminary Results,* because Creative Furniture failed to respond to the Department's questionnaire, we determined Creative Furniture's margin on the basis of facts available, pursuant to section 776(a)(1) & (2)(A), (B), and (C) of the Tariff Act of 1930 (''the Act''). We also applied an adverse inference in selecting from among the facts available, pursuant to section 776(b) of the Act, because we found that Creative Furniture failed to cooperate to the best of its ability in providing the requested information.[5]

No parties commented on this specific determination or on the margin assigned to Creative Furniture in the *Preliminary Results.* Accordingly, we are continuing to assign to Creative Furniture a dumping margin of 234.51 percent, based on total adverse facts available. Consistent with section 502 of the Trade Preferences Extension Act of 2015, Public Law 114–27, we are no longer corroborating the rate assigned to Creative Furniture for purposes of these final results.[6]

Final Determination of No Shipments

In the *Preliminary Results,* the Department preliminarily determined that Comfort Coil did not have any reviewable transactions of subject merchandise during the POR.[7] We stated, consistent with the Department's practice in nonmarket economy (''NME'') cases, that we would not rescind the review, but rather complete the review with respect to Comfort Coil and issue appropriate instructions to U.S. Customs and Border Protection (''CBP'') based on the final results of the review.[8] We did not receive any comments regarding Comfort Coil. Therefore, we continue to determine that Comfort Coil had no reviewable transactions of subject merchandise during the POR. Consistent with our ''automatic assessment'' clarification, the Department will issue appropriate instructions to CBP based on our final results.[9]

Final Results of Review

Creative Furniture's weighted-average dumping margin for the period February

[1] *See Uncovered Innerspring Units from the People's Republic of China: Preliminary Results of Antidumping Duty Administrative Review; 2013–2014,* 80 FR 9435 (February 23, 2015) (''*Preliminary Results*'').

[2] *Id.*

[3] *See* Letter from Petitioners, to the Department, regarding Fifth Administrative Review of the Antidumping Duty Order on Uncovered Innerspring Units from the People's Republic of China: Case Brief, dated March 25, 2015 (''Petitioner's Case Brief'').

[4] *See* Memorandum to Paul Piquado, Assistant Secretary for Enforcement and Compliance, from Gary Taverman, Associate Deputy Assistant Secretary for Antidumping and Countervailing Duty Operations, entitled ''Uncovered Innerspring Units from the People's Republic of China: Issues and Decision Memorandum for the Final Results of the 2013–2014 Administrative Review,'' which is dated concurrently with and hereby adopted by this notice (''Issues and Decision Memorandum'') for a complete description of the Scope of the Order.

[5] *See Preliminary Results,* and accompanying Preliminary Decision Memorandum at 5–6.

[6] *See* Issues and Decision Memorandum for further discussion of this issue.

[7] *See Preliminary Results* and accompanying Preliminary Decision Memorandum at 4.

[8] *Id.*

[9] *See Non-Market Economy Antidumping Proceedings; Assessment of Antidumping Duties,* 76 FR 65694 (October 24, 2011) (''*Assessment Practice Refinement*'').

1, 2013, through January 31, 2014, is as follows:

Exporter	Weighted-average dumping margin (percent)
Creative Furniture & Bedding Manufacturing[10]	234.51

Assessment

Pursuant to section 751(a)(2)(A) of the Act and 19 CFR 351.212(b), the Department will determine, and U.S. Customs and Border Protection (''CBP'') shall assess, antidumping duties on all appropriate entries. The Department intends to issue assessment instructions to CBP 15 days after the date of publication of the final results of review in the **Federal Register**. Consistent with the Department's assessment practice in NME cases, for entries that were not reported in the U.S. sales databases submitted by companies individually examined during this review, the Department will instruct CBP to liquidate such entries at the PRC-wide rate.[11] In addition, if the Department determines that an exporter under review had no shipments of subject merchandise, any suspended entries that entered under the exporter's case number (*i.e.,* at that exporter's rate) will be liquidated at the PRC–wide rate.[12]

For Creative Furniture, the Department will instruct CBP to assess antidumping duties on the company's entries of subject merchandise (*i.e.,* PRC-origin innersprings) at the rate of 234.51 percent.

Cash Deposit Requirements

The following cash deposit requirements will be effective upon publication of the final results of this administrative review for all shipments of the subject merchandise from the PRC entered, or withdrawn from warehouse, for consumption on or after the publication date, as provided for by section 751(a)(2)(C) of the Act: (1) for the exporter listed above, the cash deposit rate will be 234.51 percent for their entries of subject merchandise (*i.e.,* PRC-origin innersprings); (2) for previously investigated or reviewed PRC and non-PRC exporters not listed above that have a separate rate, the cash deposit rate will continue to be the exporter-specific rate published for the most recently completed segment of this proceeding in which the exporter was reviewed; (3) for all PRC exporters of subject merchandise which have not been found to be entitled to a separate rate, the cash deposit rate will be that established for the PRC-wide entity of 234.51 percent; and (4) for all non-PRC exporters of subject merchandise which have not received their own rate, the cash deposit rate will be the rate applicable to the PRC exporter that supplied that non-PRC exporter with the subject merchandise. The deposit requirements, when imposed, shall remain in effect until further notice.

Reimbursement of Duties

This notice also serves as a final reminder to importers of their responsibility under 19 CFR 351.402(f)(2) to file a certificate regarding the reimbursement of antidumping duties prior to liquidation of the relevant entries during this POR. Failure to comply with this requirement could result in the Department's presumption that reimbursement of antidumping duties occurred and the subsequent assessment of doubled antidumping duties.

Administrative Protective Orders

In accordance with 19 CFR 351.305(a)(3), this notice also serves as a final reminder to parties subject to administrative protective order (''APO'') of their responsibility concerning the return or destruction of proprietary information disclosed under APO, which continues to govern business proprietary information in this segment of the proceeding. Timely written notification of the return or destruction of APO materials, or conversion to judicial protective order, is hereby requested. Failure to comply with the regulations and terms of an APO is a violation which is subject to sanction.

Notification to Interested Parties

We are issuing and publishing this administrative review and notice in accordance with sections 751(a)(1) and 777(i) of the Act.

Dated: August 24, 2015.

Paul Piquado,

Assistant Secretary for Enforcement and Compliance.

Appendix

List of Topics Discussed in the Final Decision Memorandum

1. Summary
2. Background
3. Scope of the Order
4. Discussion of the Issue
5. Recommendation

[FR Doc. 2015–21775 Filed 9–1–15; 8:45 am]

BILLING CODE 3510–DS–P

[10] Because Creative Furniture is located in Malaysia, we are treating them as a third-country reseller. Accordingly, this rate only applies to Creative Furniture's exports of PRC-origin innersprings.

[11] *See Assessment Practice Refinement.*

[12] *Id.*

DEPARTMENT OF COMMERCE

International Trade Administration

Initiation of Antidumping and Countervailing Duty Administrative Reviews

AGENCY: Enforcement and Compliance, International Trade Administration, Department of Commerce.

SUMMARY: The Department of Commerce (''the Department'') has received requests to conduct administrative reviews of various antidumping and countervailing duty orders and findings with July anniversary dates. In accordance with the Department's regulations, we are initiating those administrative reviews.

DATES: *Effective Date:* September 2, 2015.

FOR FURTHER INFORMATION CONTACT: Brenda E. Waters, Office of AD/CVD Operations, Customs Liaison Unit, Enforcement and Compliance, International Trade Administration, U.S. Department of Commerce, 14th Street and Constitution Avenue NW., Washington, DC 20230, telephone: (202) 482–4735.

SUPPLEMENTARY INFORMATION:

Background

The Department has received timely requests, in accordance with 19 CFR 351.213(b), for administrative reviews of various antidumping and countervailing duty orders and findings with July anniversary dates.

All deadlines for the submission of various types of information, certifications, or comments or actions by the Department discussed below refer to the number of calendar days from the applicable starting time.

Notice of No Sales

If a producer or exporter named in this notice of initiation had no exports, sales, or entries during the period of review (''POR''), it must notify the Department within 30 days of publication of this notice in the **Federal Register.** All submissions must be filed electronically at *http://access.trade.gov* in accordance with 19 CFR 351.303.[1] Such submissions are subject to verification in accordance with section

[1] *See Antidumping and Countervailing Duty Proceedings: Electronic Filing Procedures; Administrative Protective Order Procedures,* 76 FR 39263 (July 6, 2011).

782(i) of the Tariff Act of 1930, as amended (''the Act''). Further, in accordance with 19 CFR 351.303(f)(1)(i), a copy must be served on every party on the Department's service list.

Respondent Selection

In the event the Department limits the number of respondents for individual examination for administrative reviews, the Department intends to select respondents based on U.S. Customs and Border Protection (''CBP'') data for U.S. imports during the POR. We intend to release the CBP data under Administrative Protective Order (''APO'') to all parties having an APO within seven days of publication of this initiation notice and to make our decision regarding respondent selection within 21 days of publication of this **Federal Register** notice. The Department invites comments regarding the CBP data and respondent selection within five days of placement of the CBP data on the record of the applicable review. Rebuttal comments will be due five days after submission of initial comments.

In the event the Department decides it is necessary to limit individual examination of respondents and conduct respondent selection under section 777A(c)(2) of the Act:

In general, the Department has found that determinations concerning whether particular companies should be ''collapsed'' (*i.e.,* treated as a single entity for purposes of calculating antidumping duty rates) require a substantial amount of detailed information and analysis, which often require follow-up questions and analysis. Accordingly, the Department will not conduct collapsing analyses at the respondent selection phase of this review and will not collapse companies at the respondent selection phase unless there has been a determination to collapse certain companies in a previous segment of this antidumping proceeding (*i.e.,* investigation, administrative review, new shipper review or changed circumstances review). For any company subject to this review, if the Department determined, or continued to treat, that company as collapsed with others, the Department will assume that such companies continue to operate in the same manner and will collapse them for respondent selection purposes. Otherwise, the Department will not collapse companies for purposes of respondent selection. Parties are requested to (a) identify which companies subject to review previously were collapsed, and (b) provide a citation to the proceeding in which they were collapsed. Further, if companies are requested to complete the Quantity and Value (''Q&V'') Questionnaire for purposes of respondent selection, in general each company must report volume and value data separately for itself. Parties should not include data for any other party, even if they believe they should be treated as a single entity with that other party. If a company was collapsed with another company or companies in the most recently completed segment of this proceeding where the Department considered collapsing that entity, complete Q&V data for that collapsed entity must be submitted.

Deadline for Withdrawal of Request for Administrative Review

Pursuant to 19 CFR 351.213(d)(1), a party that has requested a review may withdraw that request within 90 days of the date of publication of the notice of initiation of the requested review. The regulation provides that the Department may extend this time if it is reasonable to do so. In order to provide parties additional certainty with respect to when the Department will exercise its discretion to extend this 90-day deadline, interested parties are advised that the Department does not intend to extend the 90-day deadline unless the requestor demonstrates that an extraordinary circumstance has prevented it from submitting a timely withdrawal request. Determinations by the Department to extend the 90-day deadline will be made on a case-by-case basis.

Separate Rates

In proceedings involving non-market economy (''NME'') countries, the Department begins with a rebuttable presumption that all companies within the country are subject to government control and, thus, should be assigned a single antidumping duty deposit rate. It is the Department's policy to assign all exporters of merchandise subject to an administrative review in an NME country this single rate unless an exporter can demonstrate that it is sufficiently independent so as to be entitled to a separate rate.

To establish whether a firm is sufficiently independent from government control of its export activities to be entitled to a separate rate, the Department analyzes each entity exporting the subject merchandise under a test arising from the *Final Determination of Sales at Less Than Fair Value: Sparklers from the People's Republic of China,* 56 FR 20588 (May 6, 1991), as amplified by *Final Determination of Sales at Less Than Fair Value: Silicon Carbide from the People's Republic of China,* 59 FR 22585 (May 2, 1994). In accordance with the separate rates criteria, the Department assigns separate rates to companies in NME cases only if respondents can demonstrate the absence of both *de jure* and *de facto* government control over export activities.

All firms listed below that wish to qualify for separate rate status in the administrative reviews involving NME countries must complete, as appropriate, either a separate rate application or certification, as described below. For these administrative reviews, in order to demonstrate separate rate eligibility, the Department requires entities for whom a review was requested, that were assigned a separate rate in the most recent segment of this proceeding in which they participated, to certify that they continue to meet the criteria for obtaining a separate rate. The Separate Rate Certification form will be available on the Department's Web site at *http://enforcement.trade.gov/nme/nme-sep-rate.html* on the date of publication of this **Federal Register** notice. In responding to the certification, please follow the ''Instructions for Filing the Certification'' in the Separate Rate Certification. Separate Rate Certifications are due to the Department no later than 30 calendar days after publication of this **Federal Register** notice. The deadline and requirement for submitting a Certification applies equally to NME-owned firms, wholly foreign-owned firms, and foreign sellers who purchase and export subject merchandise to the United States.

Entities that currently do not have a separate rate from a completed segment of the proceeding [2] should timely file a Separate Rate Application to demonstrate eligibility for a separate rate in this proceeding. In addition, companies that received a separate rate in a completed segment of the proceeding that have subsequently made changes, including, but not limited to, changes to corporate structure, acquisitions of new companies or facilities, or changes to their official company name,[3] should

[2] Such entities include entities that have not participated in the proceeding, entities that were preliminarily granted a separate rate in any currently incomplete segment of the proceeding (*e.g.,* an ongoing administrative review, new shipper review, *etc.*) and entities that lost their separate rate in the most recently completed segment of the proceeding in which they participated.

[3] Only changes to the official company name, rather than trade names, need to be addressed via a Separate Rate Application. Information regarding new trade names may be submitted via a Separate Rate Certification.

timely file a Separate Rate Application to demonstrate eligibility for a separate rate in this proceeding. The Separate Rate Status Application will be available on the Department's Web site at *http://enforcement.trade.gov/nme/nme-sep-rate.html* on the date of publication of this **Federal Register** notice. In responding to the Separate Rate Status Application, refer to the instructions contained in the application. Separate Rate Status Applications are due to the Department no later than 30 calendar days of publication of this **Federal Register** notice. The deadline and requirement for submitting a Separate Rate Status Application applies equally to NME-owned firms, wholly foreign-owned firms, and foreign sellers that purchase and export subject merchandise to the United States.

For exporters and producers who submit a separate-rate status application or certification and subsequently are selected as mandatory respondents, these exporters and producers will no longer be eligible for separate rate status unless they respond to all parts of the questionnaire as mandatory respondents.

Initiation of Reviews

In accordance with 19 CFR 351.221(c)(1)(i), we are initiating administrative reviews of the following antidumping and countervailing duty orders and findings. We intend to issue the final results of these reviews not later than July 31, 2016.

	Period to be reviewed
Antidumping Duty Proceedings	
INDIA: Polyethylene Terephthalate (PET) Film, Sheet and Strip A–533–824	7/1/14–6/30/15
Ester Industries Limited.	
Garware Polyester Ltd.	
Jindal Poly Films Limited of India.	
MTZ Polyesters Ltd.	
Polyplex Corporation Ltd.	
SRF Limited.	
Uflex Ltd.	
Vacmet.	
Vacmet India Limited.	
ITALY: Certain Pasta A–475–818	7/1/14–6/30/15
Agritalia S.r.L.	
Atar, S.r.L.	
Azienda Agricola Casina Rossa di De Laurentiis Nicola.	
Corticella Molini e Pastifici S.p.A.	
Delverde Industrie Alimentari S.p.A.	
Domenico Paone fu Erasmo S.p.A.	
F. Divella S.p. A.	
I Sapori dell'Arca S.r.l.	
Industria Alimentare Colavita S.p.A.	
La Fabbrica della Pasta di Gragnano S.a.s. di Antonio Moccia.	
La Molisana, SpA.	
La Romagna S.r.l.	
Ligouri Pastificio Dal 1820.	
Molino e Pastificio Tomasello S.r.L.	
P.A.P SNC DI Pazienza G.B. & C.	
PAM S.p.A.	
Pasta Lensi S.r.L.	
Pasta Zara S.p.A.	
Pastificio Andalini S.p.A.	
Pastificio Bolognese of Angelo R. Dicuonzo.	
Pastificio Carmine Russo S.p.A.	
Pastificio DiMartino Gaetano & F. Ili S.r.L.	
Pastificio Fabianelli S.p.A.	
Pastificio Felicetti S.r. L.	
Pastificio Labor S.r.L.	
Pastificio Riscossa F. Ili Mastromauro S.p.A. (AKA Pastificio Riscossa F. Ili. Mastromauro S.r.L.).	
Poiatti, S.p.A.	
Premiato Pastificio Afreltra S.r. L.	
Rustichella d'Abruzzo S.p.A.	
Ser.com.snc.	
Vero Lucano S.r.l.	
RUSSIA FEDERATION: Solid Urea A–821–801	7/1/14–6/30/15
Joint Stock Company PhosAgro-Cherepovets.	
MCC EuroChem.	
OJSC Nevinnomysskiy Azot.	
OJSC NAK Azot (also known as Novomoskovskiy Azot, OJSC).	
TAIWAN: Polyethylene Terephthalate (PET) Film, Sheet, and Strip A–583–837	7/1/14–6/30/15
Nan Ya Plastics Corporation.	
Shinkong Materials Technology Corporation.	
THE PEOPLE'S REPUBLIC OF CHINA: Certain Steel Grating A–570–947	7/1/14–6/30/15
Ningbo Haitian International Co., Ltd.	
Yantai Xinke Steel Structure Co., Ltd.	
THE PEOPLE'S REPUBLIC OF CHINA: Circular Welded Carbon Quality Steel Pipe A–570–910	7/1/14–6/30/15

	Period to be reviewed
Baoshan Iron & Steel Co., Ltd.	
Beijing Jia Mei Ao Trade Co., Ltd.	
Beijing Jinghua Global Trading Co.	
Benxi Northern Steel Pipes, Co. Ltd.	
CNOOC Kingland Pipeline Co., Ltd.	
ETCO (China) International Trading Co., Ltd.	
Guangzhou Juyi Steel Pipe Co., Ltd.	
Huludao City Steel Pipe Industrial.	
Jiangsu Changbao Steel Tube Co., Ltd.	
Jiangsu Yulong Steel Pipe Co., Ltd.	
Liaoning Northern Steel Pipe Co., Ltd.	
Pangang Chengdu Group Iron & Steel Co., Ltd.	
Shanghai Zhongyou TIPO Steel Pipe Co., Ltd.	
Tianjin Baolai International Trade Co., Ltd.	
Tianjin Haoyou Industry Trade Co.	
Tianjin Longshenghua Import & Export.	
Tianjin Shuangjie Steel Pipe Co., Ltd.	
Weifang East Steel Pipe Co., Ltd.	
WISCO & CRM Wuhan Materials & Trade.	
Zhejiang Kingland Pipeline Industry Co., Ltd.	
THE PEOPLE'S REPUBLIC OF CHINA: Xanthan Gum A–570–985	7/1/14–6/30/15
A.H.A. International Co., Ltd.	
CP Kelco (Shandong) Biological Company Limited.	
Deosen Biochemical (Ordos) Ltd.	
Deosen Biochemical Ltd.	
Hebei Xinhe Biochemical Co. Ltd.	
Inner Mongolia Jianlong Biochemical Co., Ltd.	
Meihua Group International Trading (Hong Kong) Limited.	
Langfang Meihua Bio-Technology Co., Ltd.	
Xinjiang Meihua Amino Acid Co., Ltd.	
Neimenggu Fufeng Biotechnologies Co., Ltd. (aka Inner Mongolia Fufeng.	
Biotechnologies Co., Ltd.).	
Shandong Fufeng Fermentation Co., Ltd.	
Shanghai Smart Chemicals Co., Ltd.	
Xinjiang Fufeng Biotechnologies Co., Ltd.	
Countervailing Duty Proceedings	
INDIA: Polyethylene Terephthalate (PET) Film, Sheet, and Strip C–533–825	1/1/14–12/31/14
Ester Industries Limited.	
Garware Polyester Ltd.	
Jindal Poly Films Limited of India.	
MTZ Polyesters Ltd.	
Polyplex Corporation Ltd.	
SRF Limited.	
Uflex Ltd.	
Vacmet.	
Vacmet India Limited.	
ITALY: Certain Pasta C–475–819	1/1/14–12/31/14
Azienda Agricola Casina Rossa di De Laurentiis Nicola.	
I Sapori dell'Arca S.r.l.	
La Fabbrica della Pasta di Gragnano S.a.s. di Antonino Moccia.	
La Molisana, SpA.	
La Romagna S.r.l.	
Pastificio Bolognese of Angelo R. Dicuonzo.	
Ser.com.snc.	
Vero Lucano S.r.l.	
Pastificio C.A.M.S. srl.	
Poiatti, S.p.A.	
THE PEOPLE'S REPUBLIC OF CHINA: Circular Welded Carbon Quality Steel Pipe C–570–911	1/1/14–12/31/14
Baoshan Iron & Steel Co., Ltd.	
Beijing Jia Mei AO Trading Co., Ltd.	
Beijing Jinghua Global Trading Co.	
Benxi Northern Steel Pipes, Co. Ltd.	
CNOOC Kingland Pipeline Co., Ltd.	
ETCO (China) International Trading Co., Ltd.	
Guangzhou Juyi Steel Pipe Co., Ltd.	
Huludao City Steel Pipe Industrial.	
Jiangsu Changbao Steel Tube Co., Ltd.	
Jiangsu Yulong Steel Pipe Co., Ltd.	
Liaoning Northern Steel Pipe Co., Ltd.	
Pangang Chengdu Group Iron & Steel Co., Ltd.	
Shanghai Zhongyou TIPO Steel Pipe Co., Ltd.	

	Period to be reviewed
Tianjin Baolai International Trade Co., Ltd. Tianjin Haoyou Industry Trade Co. Tianjin Longshenghua Import & Export. Tianjin Shuangjie Steel Pipe Co., Ltd. Weifang East Steel Pipe Co., Ltd. WISCO & CRM Wuhan Materials & Trade. Zhejiang Kingland Pipeline Industry Co., Ltd.	
TURKEY: Certain Pasta C–489–806 Bessan Makarna Gida San. VE Tic. A.S.	1/1/14–12/31/14
Suspension Agreements	
None	

Duty Absorption Reviews

During any administrative review covering all or part of a period falling between the first and second or third and fourth anniversary of the publication of an antidumping duty order under 19 CFR 351.211 or a determination under 19 CFR 351.218(f)(4) to continue an order or suspended investigation (after sunset review), the Secretary, if requested by a domestic interested party within 30 days of the date of publication of the notice of initiation of the review, will determine, consistent with *FAG Italia* v. *United States,* 291 F.3d 806 (Fed Cir. 2002), as appropriate, whether antidumping duties have been absorbed by an exporter or producer subject to the review if the subject merchandise is sold in the United States through an importer that is affiliated with such exporter or producer. The request must include the name(s) of the exporter or producer for which the inquiry is requested.

Gap Period Liquidation

For the first administrative review of any order, there will be no assessment of antidumping or countervailing duties on entries of subject merchandise entered, or withdrawn from warehouse, for consumption during the relevant provisional-measures ''gap'' period, of the order, if such a gap period is applicable to the POR.

Administrative Protective Orders and Letters of Appearance

Interested parties must submit applications for disclosure under administrative protective orders in accordance with 19 CFR 351.305. On January 22, 2008, the Department published *Antidumping and Countervailing Duty Proceedings: Documents Submission Procedures; APO Procedures,* 73 FR 3634 (January 22, 2008). Those procedures apply to administrative reviews included in this notice of initiation. Parties wishing to participate in any of these administrative reviews should ensure that they meet the requirements of these procedures (*e.g.,* the filing of separate letters of appearance as discussed at 19 CFR 351.103(d)).

Revised Factual Information Requirements

On April 10, 2013, the Department published *Definition of Factual Information and Time Limits for Submission of Factual Information: Final Rule,* 78 FR 21246 (April 10, 2013), which modified two regulations related to antidumping and countervailing duty proceedings: The definition of factual information (19 CFR 351.102(b)(21)), and the time limits for the submission of factual information (19 CFR 351.301). The final rule identifies five categories of factual information in 19 CFR 351.102(b)(21), which are summarized as follows: (i) Evidence submitted in response to questionnaires; (ii) evidence submitted in support of allegations; (iii) publicly available information to value factors under 19 CFR 351.408(c) or to measure the adequacy of remuneration under 19 CFR 351.511(a)(2); (iv) evidence placed on the record by the Department; and (v) evidence other than factual information described in (i)–(iv). The final rule requires any party, when submitting factual information, to specify under which subsection of 19 CFR 351.102(b)(21) the information is being submitted and, if the information is submitted to rebut, clarify, or correct factual information already on the record, to provide an explanation identifying the information already on the record that the factual information seeks to rebut, clarify, or correct. The final rule also modified 19 CFR 351.301 so that, rather than providing general time limits, there are specific time limits based on the type of factual information being submitted. These modifications are effective for all segments initiated on or after May 10, 2013. Please review the final rule, available at *http://enforcement.trade.gov/frn/2013/1304frn/2013–08227.txt*, prior to submitting factual information in this segment.

Any party submitting factual information in an antidumping duty or countervailing duty proceeding must certify to the accuracy and completeness of that information.[4] Parties are hereby reminded that revised certification requirements are in effect for company/government officials as well as their representatives. All segments of any antidumping duty or countervailing duty proceedings initiated on or after August 16, 2013, should use the formats for the revised certifications provided at the end of the *Final Rule.*[5] The Department intends to reject factual submissions in any proceeding segments if the submitting party does not comply with applicable revised certification requirements.

Revised Extension of Time Limits Regulation

On September 20, 2013, the Department modified its regulation concerning the extension of time limits for submissions in antidumping and countervailing duty proceedings: *Final Rule,* 78 FR 57790 (September 20, 2013). The modification clarifies that parties may request an extension of time limits before a time limit established under Part 351 expires, or as otherwise specified by the Secretary. In general, an extension request will be considered untimely if it is filed after the time limit established under Part 351 expires. For submissions which are due from multiple parties simultaneously, an

[4] *See* section 782(b) of the Act.

[5] *See Certification of Factual Information To Import Administration During Antidumping and Countervailing Duty Proceedings,* 78 FR 42678 (July 17, 2013) (''*Final Rule*''); *see also* the frequently asked questions regarding the *Final Rule,* available at *http://enforcement.trade.gov/tlei/notices/factual_info_final_rule_FAQ_07172013.pdf.*

extension request will be considered untimely if it is filed after 10:00 a.m. on the due date. Examples include, but are not limited to: (1) Case and rebuttal briefs, filed pursuant to 19 CFR 351.309; (2) factual information to value factors under 19 CFR 351.408(c), or to measure the adequacy of remuneration under 19 CFR 351.511(a)(2), filed pursuant to 19 CFR 351.301(c)(3) and rebuttal, clarification and correction filed pursuant to 19 CFR 351.301(c)(3)(iv); (3) comments concerning the selection of a surrogate country and surrogate values and rebuttal; (4) comments concerning U.S. Customs and Border Protection data; and (5) quantity and value questionnaires. Under certain circumstances, the Department may elect to specify a different time limit by which extension requests will be considered untimely for submissions which are due from multiple parties simultaneously. In such a case, the Department will inform parties in the letter or memorandum setting forth the deadline (including a specified time) by which extension requests must be filed to be considered timely. This modification also requires that an extension request must be made in a separate, stand-alone submission, and clarifies the circumstances under which the Department will grant untimely-filed requests for the extension of time limits. These modifications are effective for all segments initiated on or after October 21, 2013. Please review the final rule, available at *http://www.gpo.gov/fdsys/pkg/FR-2013–09-20/html/2013-22853.htm,* prior to submitting factual information in these segments.

These initiations and this notice are in accordance with section 751(a) of the Act (19 U.S.C. 1675(a)) and 19 CFR 351.221(c)(1)(i).

Dated: August 27, 2015.

Gary Taverman,

Associate Deputy Assistant Secretary for Antidumping and Countervailing Duty Operations.

[FR Doc. 2015–21777 Filed 9–1–15; 8:45 am]

BILLING CODE 3510–DS–P

DEPARTMENT OF COMMERCE

International Trade Administration

[A–549–821]

Polyethylene Retail Carrier Bags From Thailand: Notice of Final Results of Antidumping Duty Changed Circumstances Review

AGENCY: Enforcement and Compliance, International Trade Administration, Department of Commerce.

SUMMARY: The Department of Commerce (the Department) has determined that TPBI Public Company Limited (TPBI) is the successor-in-interest to Thai Plastic Bags Industries Company Limited (Thai Plastic Bags Company) for purposes of the antidumping duty order on polyethylene retail carrier bags (PRCBs) from Thailand and, as such, will be entitled to Thai Plastic Bags Company's exclusion from the antidumping duty order.

DATES: *Effective Date:* September 2, 2015.

FOR FURTHER INFORMATION CONTACT: Thomas Schauer, AD/CVD Operations, Office I, Enforcement and Compliance, International Trade Administration, Department of Commerce, 14th Street and Constitution Avenue NW., Washington, DC 20230; telephone: (202) 482–0410.

SUPPLEMENTARY INFORMATION:

Background

On July 20, 2015, pursuant to a request from TPBI, we initiated and announced the preliminary results of a changed-circumstances review of the antidumping duty order on PRCBs from Thailand to determine whether TPBI was a successor-in-interest to Thai Plastic Bags Company.[1]

In the *Preliminary Results,* we solicited comments from interested parties.[2] The only party to comment on the *Preliminary Results* was TPBI supporting the *Preliminary Results.*[3]

Scope of the Order

The merchandise subject to the order is PRCBs, which may be referred to as t-shirt sacks, merchandise bags, grocery bags, or checkout bags. The subject merchandise is defined as non-sealable sacks and bags with handles (including drawstrings), without zippers or integral extruded closures, with or without gussets, with or without printing, of polyethylene film having a thickness no greater than 0.035 inch (0.889 mm) and no less than 0.00035 inch (0.00889 mm), and with no length or width shorter than 6 inches (15.24 cm) or longer than 40 inches (101.6 cm). The depth of the bag may be shorter than 6 inches but not longer than 40 inches (101.6 cm).

PRCBs are typically provided without any consumer packaging and free of charge by retail establishments, *e.g.,* grocery, drug, convenience, department, specialty retail, discount stores, and restaurants, to their customers to package and carry their purchased products. The scope of the order excludes (1) polyethylene bags that are not printed with logos or store names and that are closeable with drawstrings made of polyethylene film and (2) polyethylene bags that are packed in consumer packaging with printing that refers to specific end-uses other than packaging and carrying merchandise from retail establishments, *e.g.,* garbage bags, lawn bags, trash-can liners.

As a result of changes to the Harmonized Tariff Schedule of the United States (HTSUS), imports of the subject merchandise are currently classifiable under statistical category 3923.21.0085 of the HTSUS. Furthermore, although the HTSUS subheading is provided for convenience and customs purposes, the written description of the scope of the order is dispositive.

Final Results of the Changed Circumstances Review

In 2010, the antidumping duty order on PRCBs from Thailand was partially revoked with respect to Thai Plastic Bags Company.[4] For the reasons stated in the *Preliminary Results,* we continue to find that TPBI is the successor-in-interest to Thai Plastic Bags Company and, as a result, should be accorded the same treatment as Thai Plastic Bags Company.[5] We will instruct U.S. Customs and Border Protection to neither suspend liquidation nor collect cash deposits with respect to TPBI.

Notification to Interested Parties

This notice serves as a reminder to parties subject to administrative protective order (APO) of their responsibility concerning the disposition of proprietary information disclosed under APO in accordance with 19 CFR 351.306. Timely written notification of the destruction of APO materials or conversion to judicial protective order is hereby requested. Failure to comply with the regulations and terms of an APO is a sanctionable violation.

This notice is published in accordance with sections 751(b)(1) and

---

[1] *See Polyethylene Retail Carrier Bags From Thailand: Notice of Initiation and Preliminary Results of Antidumping Duty Changed Circumstances Review,* 80 FR 42789 (July 20, 2015) (*Preliminary Results*).

[2] *Id.*

[3] *See* letter from TPBI, ''Polyethylene Retail Carrier Bags (PRCBs) from Thailand: Expedited Changed Circumstances Review'' (July 17, 2015).

[4] *See Notice of Implementation of Determination Under Section 129 of the Uruguay Round Agreements Act and Partial Revocation of the Antidumping Duty Order on Polyethylene Retail Carrier Bags From Thailand,* 75 FR 48940 (August 12, 2010).

[5] *See Preliminary Results* and accompanying Decision Memorandum.

777(i) of the Act and 19 CFR 351.216 and 351.221.

Dated: August 27, 2015.

Paul Piquado,

Assistant Secretary for Enforcement and Compliance.

[FR Doc. 2015–21769 Filed 9–1–15; 8:45 am]

BILLING CODE 3510–DS–P

DEPARTMENT OF COMMERCE

International Trade Administration

[A–489–805]

Certain Pasta From Turkey: Initiation of Antidumping Duty New Shipper Review

AGENCY: Enforcement and Compliance, International Trade Administration, Department of Commerce.

DATES: *Effective Date:* September 2, 2015.

SUMMARY: The Department of Commerce (the Department) is initiating a new shipper review of the antidumping duty order on certain pasta from Turkey involving DURUM Gida Sanayi ve Ticaret A.S. (Durum).

FOR FURTHER INFORMATION CONTACT: Fred Baker, AD/CVD Operations Office VI, Enforcement and Compliance, International Trade Administration, U.S. Department of Commerce, 14th Street and Constitution Avenue NW., Washington, DC 20230; Telephone: (202) 482–2924.

SUPPLEMENTARY INFORMATION:

Background

The antidumping duty order on certain pasta from Turkey published in the **Federal Register** on July 24, 1996.[1] Pursuant to section 751(a)(2)(B)(i) of the Tariff Act of 1930, as amended (the Act), we received a timely request for a new shipper review of the order from Durum.[2] Durum certified that it is both the producer and exporter of the subject merchandise upon which the request was based.[3]

Pursuant to section 751(a)(2)(B)(i)(I) of the Act and 19 CFR 351.214(b)(2)(i), Durum certified that it did not export subject merchandise to the United States during the period of investigation (POI).[4] In addition, pursuant to section 751(a)(2)(B)(i)(II) of the Act and 19 CFR 351.214(b)(2)(iii)(A), Durum certified that, since the initiation of the investigation, it has never been affiliated with any exporter or producer that exported subject merchandise to the United States during the POI, including those respondents not individually examined during the POI.[5]

In addition to the certifications described above, pursuant to 19 CFR 351.214(b)(2), Durum submitted documentation establishing the following: (1) The date on which the subject merchandise was first entered, or withdrawn from warehouse, for consumption; (2) the volume of its first shipment; and (3) the date of its first sale to an unaffiliated customer in the United States.[6]

Period of Review

In accordance with 19 CFR 351.214(g)(1)(i)(A) of the Act, the period of review (POR) for the new shipper reviews of Durum is July 1, 2014, through June 30, 2015.

Initiation of New Shipper Review

Pursuant to section 751(a)(2)(B) of the Act and 19 CFR 351.214(d)(1), the Department finds that the request from Durum meets the threshold requirements for initiation of a new shipper review for shipments of certain pasta from Turkey produced and exported by Durum.[7]

The Department intends to issue the preliminary results of this new shipper review no later than 180 days from the date of initiation and the final results of the review no later than 90 days after the date the preliminary results are issued.[8]

We will instruct U.S. Customs and Border Protection to allow, at the option of the importer, the posting, until the completion of the review, of a bond or security in lieu of a cash deposit for each entry of the subject merchandise from Durum in accordance with section 751(a)(2)(B)(iii) of the Act and 19 CFR 351.214(e). Because Durum certified that it produced and exported subject merchandise, the sale of which is the basis for the request for a new shipper review, we will apply the bonding privilege to Durum only for subject merchandise which was produced and exported by Durum.

To assist in its analysis of the *bona fides* of Durum's sales, upon initiation of this new shipper review, the Department will require Durum to submit on an ongoing basis complete transaction information concerning any sales of subject merchandise to the United States that were made subsequent to the POR.

Interested parties requiring access to proprietary information in the new shipper review should submit applications for disclosure under administrative protective order in accordance with 19 CFR 351.305 and 351.306.

This initiation and notice are published in accordance with section 751(a)(2)(B) of the Act and 19 CFR 351.214 and 351.221(c)(1)(i).

Dated: August 27, 2015.

Gary Taverman,

Associate Deputy Assistant Secretary for Antidumping and Countervailing Duty Operations.

[FR Doc. 2015–21776 Filed 9–1–15; 8:45 am]

BILLING CODE 3510–DS–P

[1] *See Notice of Antidumping Duty Order and Amended Final Determinations of Sales at Less Than Fair Value: Certain Pasta From Turkey,* 61 FR 38545 (July 24, 1996) (*Order*).

[2] *See* Durum's new shipper request dated July 27, 2015, and the revised version (correcting for filing errors) submitted August 11, 2015.

[3] *Id.,* at Exhibit 1.

[4] *Id.*

[5] *Id.*

[6] *Id.,* at Exhibit 2.

[7] *See* the memorandum to the file entitled ''Initiation of AD New Shipper Review'' dated concurrently with this notice.

[8] *See* section 751(a)(2)(B)(iv) of the Act.

DEPARTMENT OF COMMERCE

International Trade Administration

[A–421–811]

Purified Carboxymethylcellulose From the Netherlands: Final Results of Antidumping Duty Administrative Review; 2013–2014

AGENCY: Enforcement and Compliance, International Trade Administration, Department of Commerce.

SUMMARY: On June 8, 2015, the Department of Commerce (the Department) published the preliminary results of the administrative review of the antidumping duty (AD) order on purified carboxymethylcellulose (CMC) from the Netherlands.[1] We invited interested parties to comment on the *Preliminary Results.* We received no comments or requests for a hearing. Therefore, for the final results, we continue to find that sales of subject merchandise by Akzo Nobel Functional Chemicals, B.V./AkzoNobel Chemicals AG (Akzo Nobel) were not made at less than normal value during the period of review (POR).[2]

DATES: Effective date: September 2, 2015.

FOR FURTHER INFORMATION CONTACT: John Drury or Angelica Townshend, AD/CVD Operations, Office VI, Enforcement and

[1] *See Purified Carboxymethylcellulose From the Netherlands: Preliminary Results of Antidumping Duty Administrative Review; 2013–2014,* 80 FR 32340 (June 8, 2015) (*Preliminary Results*).

[2] The Department preliminarily determined to collapse Akzo Nobel Functional Chemicals B.V. and AkzoNobel Chemicals AG into a single entity. *See Preliminary Results.*

Compliance, International Trade Administration, U.S. Department of Commerce, 14th Street and Constitution Avenue NW., Washington, DC 20230; telephone: (202) 482–0195, and (202) 482–3019, respectively.

Background

On June 8, 2015, the Department published the *Preliminary Results.* The POR is July 1, 2013, through June 30, 2014. We invited interested parties to comment on the *Preliminary Results.* We received no comments or requests for a hearing from any party. The Department conducted this administrative review in accordance with section 751(a)(2) of the Tariff Act of 1930, as amended (the Act).

Scope of the Order

The product covered by the order is all purified CMC, sometimes also referred to as purified sodium CMC, polyanionic cellulose, or cellulose gum, which is a white to off-white, non-toxic, odorless, biodegradable powder, comprising sodium CMC that has been refined and purified to a minimum assay of 90 percent. Purified CMC does not include unpurified or crude CMC, CMC Fluidized Polymer Suspensions, and CMC that is cross-linked through heat treatment. Purified CMC is CMC that has undergone one or more purification operations, which, at a minimum, reduce the remaining salt and other by-product portion of the product to less than ten percent.

The merchandise subject to the order is currently classified in the Harmonized Tariff Schedule of the United States at subheading 3912.31.00. This tariff classification is provided for convenience and Customs purposes; however, the written description of the scope of the order is dispositive.

Final Results of Review

As noted above, the Department received no comments concerning the *Preliminary Results* on the record of this segment of the proceeding. As there are no changes from, or comments upon, the *Preliminary Results*, the Department finds that there is no reason to modify its analysis. Thus, we continue to find that sales of subject merchandise by Akzo Nobel were not made at less than normal value during the POR. Accordingly, no decision memorandum accompanies this **Federal Register** notice. For further details of the issues addressed in this proceeding, *see* the *Preliminary Results* and the accompanying Preliminary Decision Memorandum.[3] The final weighted-average dumping margin for the period July 1, 2013, through June 30, 2014, for Akzo Nobel is as follows:

Producer/Exporter	Weighted-average margin (percentage)
Akzo Nobel Functional Chemicals B.V./AkzoNobel Chemicals AG[4]	0.00

Assessment Rates

The Department will determine, and U.S. Customs and Border Protection (CBP) shall assess, antidumping duties on all appropriate entries in this review, in accordance with 19 CFR 351.212(b). The Department intends to issue assessment instructions directly to CBP 15 days after publication of these final results of review. Because we have calculated a zero margin for Akzo Nobel in the final results of this review, we will instruct CBP to liquidate the appropriate entries without regard to antidumping duties.

The Department clarified its ''automatic assessment'' regulation on May 6, 2003.[5] This clarification applies to entries of subject merchandise during the POR produced and exported by Akzo Nobel for which it did not know that the merchandise was destined for the United States. In such instances, we will instruct CBP to liquidate un-reviewed entries at the all-others rate effective during the POR if there is no rate for the intermediate company(ies) involved in the transaction.[6]

Cash Deposit Requirements

The following cash deposit requirements will be effective upon publication of the final results of this administrative review for all shipments of the subject merchandise entered, or withdrawn from warehouse, for consumption on or after the publication date, as provided for by section 751(a)(2)(C) of the Act: (1) The cash deposit rate for Akzo Nobel will be the rate established in the final results of this review; (2) for previously reviewed or investigated companies not covered in this review, the cash deposit rate will continue to be the company-specific rate published for the most recent period; (3) if the exporter is not a firm covered in this or any previous review or in the less-than-fair-value (LTFV) investigation but the manufacturer is, the cash-deposit rate will be the rate established for the most recent period for the manufacturer of the merchandise; and (4) if neither the exporter nor the manufacturer is a firm covered in this or any previous review or the investigation, the cash-deposit rate will continue to be the all-others rate of 14.57 percent, which is the all-others rate established by the Department in the LTFV investigation.[7] These cash deposit requirements, when imposed, shall remain in effect until further notice.

Reimbursement of Duties

This notice also serves as a final reminder to importers of their responsibility under 19 CFR 351.402(f)(2) to file a certificate regarding the reimbursement of antidumping duties prior to liquidation of the relevant entries during this review period. Failure to comply with this requirement could result in the Secretary's presumption that reimbursement of antidumping duties occurred and the subsequent assessment of double antidumping duties.

Administrative Protective Order

This notice also serves as a reminder to parties subject to administrative protective order (APO) of their responsibility concerning the return or destruction of proprietary information disclosed under APO in accordance with 19 CFR 351.305(a)(3), which continues to govern business proprietary information in this segment of the proceeding. Timely written notification of the return/destruction of APO materials or conversion to judicial protective order is hereby requested. Failure to comply with the regulations and terms of an APO is a violation, which is subject to sanction.

[3] *See* ''Decision Memorandum for Preliminary Results of Antidumping Duty Administrative Review: Purified Carboxymethylcellulose from the Netherlands; 2013–2014,'' from Christian Marsh, Deputy Assistant Secretary for Antidumping and Countervailing Duty Operations, to Paul Piquado, Assistant Secretary for Enforcement and Compliance, dated June 1, 2015 (Preliminary Decision Memorandum), which can be accessed directly at *http://enforcement.trade.gov/frn/*.

[4] In the *Preliminary Results* of this administrative review, the Department determined that Akzo Nobel Functional Chemicals, B.V. and AkzoNobel Chemicals AG should be treated as a single entity, based on affiliation and intertwined relations. *See Preliminary Results*, 80 FR at 32341 and n.1, and accompanying Preliminary Decision Memorandum at ''Affiliation and Treatment as a Single Entity.'' This finding is unchanged in these final results of review.

[5] *See Antidumping and Countervailing Duty Proceedings: Assessment of Antidumping Duties,* 68 FR 23954 (May 6, 2003) (*Assessment Policy Notice*).

[6] *See Assessment Policy Notice* for a full discussion of this clarification.

[7] *See Notice of Antidumping Duty Orders: Purified Carboxymethylcellulose from Finland, Mexico, the Netherlands and Sweden,* 70 FR 39734, 39735 (July 11, 2005).

We are issuing and publishing this notice in accordance with sections 751(a)(1) and 777(i)(1) of the Act.

Dated: August 27, 2015.

Paul Piquado,

Assistant Secretary for Enforcement and Compliance.

[FR Doc. 2015–21773 Filed 9–1–15; 8:45 am]

BILLING CODE 3510–DS–P

DEPARTMENT OF COMMERCE

National Institute of Standards and Technology

Proposed Information Collection; Comment Request; Malcolm Baldrige National Quality Award Application (MBNQA)

AGENCY: National Institute of Standards and Technology, Commerce.

ACTION: Notice.

SUMMARY: The Department of Commerce, as part of its continuing effort to reduce paperwork and respondent burden, invites the general public and other Federal agencies to take this opportunity to comment on proposed and/or continuing information collections, as required by the Paperwork Reduction Act of 1995.

DATES: Written comments must be submitted on or before November 2, 2015.

ADDRESSES: Direct all written comments to Jennifer Jessup, Departmental Paperwork Clearance Officer, Department of Commerce, Room 6616, 14th and Constitution Avenue NW., Washington, DC 20230 (or via the Internet at *JJessup@doc.gov*).

FOR FURTHER INFORMATION CONTACT: Requests for additional information or copies of the information collection instrument and instructions should be directed to Dawn Bailey, Baldrige Performance Excellence Program, 100 Bureau Drive, Stop 1020, Gaithersburg, MD, 20899, 301–975–3074, *dawn.bailey@nist.gov.*

SUPPLEMENTARY INFORMATION:

I. Abstract

The Department of Commerce is responsible for the Baldrige Performance Excellence Program (BPEP) and the Malcolm Baldrige National Quality Award (MBNQA), the nation's highest award for organizational performance excellence. Directly associated with this award is the Board of Examiners, an integral volunteer workforce for BPEP. NIST manages BPEP. An applicant organization for the MBNQA is required to perform two steps: (1) The applicant organization self-certifies that it meets eligibility requirements with an eligibility form; and (2) the applicant organization prepares and completes an application package. BPEP will assist with or offer advice on any questions or issues that the applicant may have concerning the eligibility or application processes; this includes BPEP staff manning a hotline during the week and on weekends for organizations to call or email. With the help of the Board of Examiners, BPEP will use the eligibility forms and application package to assess and provide feedback on the applicant's performance excellence practices. These practices could lead to a MBNQA awarded by the President of the United States or his delegate.

Per Public Law 100–107 (Malcolm Baldrige National Quality Improvement Act of 1987), the MBNQA helps to stimulate American companies to improve quality and productivity for the pride of recognition while obtaining a competitive edge through increased profits; recognizes the achievements of those companies that improve the quality of their goods and services and provide an example to others; establishes guidelines and criteria that can be used by business, industrial, governmental, and other organizations in evaluating their own quality improvement efforts; and provides specific guidance for other American organizations that wish to learn how to manage for high quality by making available detailed information on how winning organizations were able to change their cultures and achieve eminence.

The application to be a member of the Board of Examiners is a one-step, secure, online process. Each year, BPEP recruits highly skilled experts in the fields of manufacturing, service, small business, health care, education, and nonprofit, the six Award eligibility categories, to evaluate the applications that BPEP receives. Examiners serve for a one-year term; participation on the board is entirely voluntary. Examiners receive three- to four-days of free on-site training (depending on experience level); this training has been nationally recognized for two consecutive years as part of the number-one leadership development program in the military/government category of the Leadership 500 Awards, sponsored by HR.com.

BPEP's mission to improve the competitiveness and performance of U.S. organizations for the benefit of all U.S. residents.

II. Method of Collection

MBNQA applicant organizations must comply in writing according to the Eligibility Certification Form and Baldrige Award Application Form available at *http://www.nist.gov/baldrige/enter/how_to_apply.cfm.* Information on the application for the Board of Examiners can be found at *http://www.nist.gov/baldrige/examiners/index.cfm.* BPEP will electronically send a unique user ID and password (separate emails) on how applicants to the Board of Examiners can apply to the secure system.

III. Data

OMB Control Number: 0693–0006.

Form Number(s): None.

Type of Review:. Revision of a current information collection.

Affected Public: Business, health care, education, or other for-profit organizations; health care, education, and other nonprofit organizations; and individuals or households.

Estimated Number of Respondents: 580 (30 Applications for MBNQA and 550 Applicants for the Board of Examiners).

Estimated Time per Response: 74 hours for applications for MBNQA, and 1 hour for applications for the Board of Examiners.

Estimated Total Annual Burden Hours: 2,770 (MBNQA = 2,220 and Board of Examiners = 550).

Estimated Total Annual Cost to Public: MBNQA = $1,610–$79,610 (application and site visit fees vary depending on profit nature of organization and its sector [*e.g.,* smallest fee is for a nonprofit K–12 school, largest fee is for a global manufacturer]; additionally, only 25% of applications pay site visit fees that again vary depending on number of sites and sector of the organization) and Board of Examiners: $0.

IV. Request for Comments

Comments are invited on: (a) Whether the proposed collection of information is necessary for the proper performance of the functions of the agency, including whether the information shall have practical utility; (b) the accuracy of the agency's estimate of the burden (including hours and cost) of the proposed collection of information; (c) ways to enhance the quality, utility, and clarity of the information to be collected; and (d) ways to minimize the burden of the collection of information on respondents, including through the use of automated collection techniques or other forms of information technology.

Comments submitted in response to this notice will be summarized and/or included in the request for OMB approval of this information collection; they also will become a matter of public record.

Dated: August 28, 2015.

Glenna Mickelson,

Management Analyst, Office of the Chief Information Officer.

[FR Doc. 2015–21735 Filed 9–1–15; 8:45 am]

BILLING CODE 3510–13–P

DEPARTMENT OF COMMERCE

National Oceanic and Atmospheric Administration

RIN 0648–XE118

Determination of Overfishing or an Overfished Condition

AGENCY: National Marine Fisheries Service (NMFS), National Oceanic and Atmospheric Administration (NOAA), Commerce.

ACTION: Notice.

SUMMARY: This action serves as a notice that NMFS, on behalf of the Secretary of Commerce (Secretary), has found that the following four stocks of Pacific salmon are subject to overfishing: Chinook salmon—Columbia River Basin: Upper River Summer; Chinook salmon—Washington Coast: Willapa Bay Fall Natural; Chinook salmon—Washington Coast: Grays Harbor Fall; and Coho salmon—Washington Coast: Hoh. In addition, NMFS has found that the North Pacific swordfish stock in the Eastern Pacific Ocean, which is jointly managed by the Pacific Fishery Management Council and the Western Pacific Fishery Management Council, is subject to overfishing. NMFS, on behalf of the Secretary, notifies the appropriate fishery management council (Council) whenever it determines that overfishing is occurring, a stock is in an overfished condition, a stock is approaching an overfished condition, or when a rebuilding plan has not resulted in adequate progress toward ending overfishing and rebuilding affected fish stocks. None of these stocks is in an overfished condition.

FOR FURTHER INFORMATION CONTACT: Regina Spallone, (301) 427–8568.

SUPPLEMENTARY INFORMATION: Pursuant to sections 304(e)(2) and (e)(7) of the Magnuson-Stevens Fishery Conservation and Management Act (Magnuson-Stevens Act), 16 U.S.C. 1854(e)(2) and (e)(7), and implementing regulations at 50 CFR 600.310(e)(2), NMFS, on behalf of the Secretary, must notify Councils whenever it determines that a stock or stock complex is overfished or approaching an overfished condition; or if an existing rebuilding plan has not ended overfishing or resulted in adequate rebuilding progress. NMFS also notifies Councils when it determines a stock or stock complex is subject to overfishing. Section 304(e)(2) further requires NMFS to publish these notices in the **Federal Register**.

NMFS has determined that four stocks of Pacific salmon are now subject to overfishing:

1. Chinook salmon—Columbia River Basin: Upper River Summer;

2. Chinook salmon—Washington Coast: Willapa Bay Fall Natural;

3. Chinook salmon— Washington Coast: Grays Harbor Fall; and

4. Coho salmon—Washington Coast: Hoh.

The Pacific Fishery Management Council has been informed that they must take action to end overfishing immediately on these stocks.

In addition, NMFS has determined that the North Pacific swordfish stock in the Eastern Pacific Ocean (EPO) is subject to overfishing and is not in an overfished condition. This determination was based on an assessment conducted by the International Scientific Committee for Tuna and Tuna-like Species in the North Pacific Ocean (ISC), in conjunction with NOAA scientists. NMFS has confirmed that section 304(i) of the Magnuson-Stevens Fishery Conservation and Management Act (Magnuson-Stevens Act) applies because (1) the overfishing condition of swordfish is due largely to excessive international fishing pressure, and (2) there are no management measures (or efficiency measures) to end overfishing under an international agreement to which the U.S. is a party. NMFS has informed the Western Pacific Fishery Management Council and the Pacific Fishery Management Council of their obligations for international and domestic management under Magnuson-Stevens Act sections 304(i) and 304(i)(2) to address international and domestic impacts, respectively. The Councils must develop domestic regulations to address the relative impact of the domestic fishing fleet on the stock, and develop recommendations to the Secretary of State and Congress for international actions to end overfishing on North Pacific swordfish EPO.

Dated: August 27, 2015.

Emily H. Menashes,

Acting Director, Office of Sustainable Fisheries, National Marine Fisheries Service.

[FR Doc. 2015–21676 Filed 9–1–15; 8:45 am]

BILLING CODE 3510–22–P

DEPARTMENT OF COMMERCE

National Oceanic and Atmospheric Administration

RIN 0648–XE057

Takes of Marine Mammals Incidental to Specified Activities; Taking Marine Mammals Incidental to a Pier Replacement Project

AGENCY: National Marine Fisheries Service (NMFS), National Oceanic and Atmospheric Administration (NOAA), Commerce.

ACTION: Notice; proposed incidental harassment authorization; request for comments.

SUMMARY: NMFS has received a request from the U.S. Navy (Navy) for authorization to take marine mammals incidental to construction activities as part of a pier replacement project. Pursuant to the Marine Mammal Protection Act (MMPA), NMFS is requesting comments on its proposal to issue an incidental harassment authorization (IHA) to the Navy to incidentally take marine mammals, by Level B Harassment only, during the specified activity.

DATES: Comments and information must be received no later than October 2, 2015.

ADDRESSES: Comments on the application should be addressed to Jolie Harrison, Chief, Permits and Conservation Division, Office of Protected Resources, National Marine Fisheries Service. Physical comments should be sent to 1315 East-West Highway, Silver Spring, MD 20910 and electronic comments should be sent to *ITP.Laws@noaa.gov.*

Instructions: NMFS is not responsible for comments sent by any other method, to any other address or individual, or received after the end of the comment period. Comments received electronically, including all attachments, must not exceed a 25-megabyte file size. Attachments to electronic comments will be accepted in Microsoft Word or Excel or Adobe PDF file formats only. All comments received are a part of the public record and will generally be posted to the Internet at *www.nmfs.noaa.gov/pr/permits/incidental/construction.htm*

without change. All personal identifying information (*e.g.,* name, address) voluntarily submitted by the commenter may be publicly accessible. Do not submit confidential business information or otherwise sensitive or protected information.

FOR FURTHER INFORMATION CONTACT: Ben Laws, Office of Protected Resources, NMFS, (301) 427–8401.

SUPPLEMENTARY INFORMATION:

Availability

An electronic copy of the Navy's application and supporting documents, as well as a list of the references cited in this document, may be obtained by visiting the Internet at: *www.nmfs.noaa.gov/pr/permits/incidental/construction.htm*. In case of problems accessing these documents, please call the contact listed above.

National Environmental Policy Act (NEPA)

The Navy prepared an Environmental Assessment (EA; 2013) for this project. We subsequently adopted the EA and signed our own Finding of No Significant Impact (FONSI) prior to issuing the first IHA for this project, in accordance with NEPA and the regulations published by the Council on Environmental Quality. Information in the Navy's application, the Navy's EA, and this notice collectively provide the environmental information related to proposed issuance of this IHA for public review and comment. All documents are available at the aforementioned Web site. We will review all comments submitted in response to this notice as we complete the NEPA process, including a decision of whether to reaffirm the existing FONSI, prior to a final decision on the incidental take authorization request.

Background

Sections 101(a)(5)(A) and (D) of the MMPA (16 U.S.C. 1361 *et seq.*) direct the Secretary of Commerce to allow, upon request, the incidental, but not intentional, taking of small numbers of marine mammals by U.S. citizens who engage in a specified activity (other than commercial fishing) within a specified geographical region if certain findings are made and either regulations are issued or, if the taking is limited to harassment, a notice of a proposed authorization is provided to the public for review.

Authorization for incidental takings shall be granted if NMFS finds that the taking will have a negligible impact on the species or stock(s), will not have an unmitigable adverse impact on the availability of the species or stock(s) for subsistence uses (where relevant), and if the permissible methods of taking and requirements pertaining to the mitigation, monitoring and reporting of such takings are set forth. NMFS has defined ''negligible impact'' in 50 CFR 216.103 as ''. . . an impact resulting from the specified activity that cannot be reasonably expected to, and is not reasonably likely to, adversely affect the species or stock through effects on annual rates of recruitment or survival.''

Section 101(a)(5)(D) of the MMPA established an expedited process by which citizens of the U.S. can apply for an authorization to incidentally take small numbers of marine mammals by harassment. Section 101(a)(5)(D) establishes a 45-day time limit for NMFS review of an application followed by a 30-day public notice and comment period on any proposed authorizations for the incidental harassment of marine mammals. Within 45 days of the close of the comment period, NMFS must either issue or deny the authorization. Except with respect to certain activities not pertinent here, the MMPA defines ''harassment'' as ''any act of pursuit, torment, or annoyance which (i) has the potential to injure a marine mammal or marine mammal stock in the wild [Level A harassment]; or (ii) has the potential to disturb a marine mammal or marine mammal stock in the wild by causing disruption of behavioral patterns, including, but not limited to, migration, breathing, nursing, breeding, feeding, or sheltering [Level B harassment].''

Summary of Request

On June 12, 2015, we received a request from the Navy for authorization to take marine mammals incidental to pile installation and removal associated with a pier replacement project in San Diego Bay at Naval Base Point Loma in San Diego, CA (NBPL). The Navy also submitted a separate monitoring plan and draft monitoring report pursuant to requirements of the previous IHA. The Navy submitted revised versions of the request on July 3 and July 26, 2015, a revised version of the monitoring plan on July 21, 2015, and a revised monitoring report on July 29, 2015. These documents were deemed adequate and complete. The pier replacement project is planned to occur over four years; this proposed IHA would cover only the third year of work and would be valid for a period of one year from the date of issuance. Hereafter, use of the generic term ''pile driving'' may refer to both pile installation and removal unless otherwise noted.

The use of both vibratory and impact pile driving is expected to produce underwater sound at levels that have the potential to result in behavioral harassment of marine mammals. Species with the expected potential to be present during all or a portion of the in-water work window include the California sea lion (*Zalophus californianus*), harbor seal (*Phoca vitulina richardii*), northern elephant seal (*Mirounga angustirostris*), gray whale (*Eschrichtius robustus*), bottlenose dolphin (*Tursiops truncatus truncatus*), Pacific white-sided dolphin (*Lagenorhynchus obliquidens*), Risso's dolphin (*Grampus griseus*), and either short-beaked or long-beaked common dolphins (*Delphinus* spp.). California sea lions are present year-round and are very common in the project area, while bottlenose dolphins and harbor seals are common and likely to be present year-round but with more variable occurrence in San Diego Bay. Gray whales may be observed in San Diego Bay sporadically during migration periods. The remaining species are known to occur in nearshore waters outside San Diego Bay, but are generally only rarely observed near or in the bay. However, recent observations indicate that these species may occur in the project area and therefore could potentially be subject to incidental harassment from the aforementioned activities.

This would be the third such IHA, if issued, following the IHAs issued effective from September 1, 2013, through August 31, 2014 (78 FR 44539) and from October 8, 2014, through October 7, 2015 (79 FR 65378). Monitoring reports are available on the Internet at *www.nmfs.noaa.gov/pr/permits/incidental/construction.htm* and provide environmental information related to proposed issuance of this IHA for public review and comment.

Description of the Specified Activity

Overview

NBPL provides berthing and support services for Navy submarines and other fleet assets. The existing fuel pier serves as a fuel depot for loading and unloading tankers and Navy underway replenishment vessels that refuel ships at sea (''oilers''), as well as transferring fuel to local replenishment vessels and other small craft operating in San Diego Bay, and is the only active Navy fueling facility in southern California. Portions of the pier are over one hundred years old, while the newer segment was constructed in 1942. The pier as a whole is significantly past its design service

life and does not meet current construction standards.

Over the course of four years, the Navy plans to demolish and remove the existing pier and associated pipelines and appurtenances while simultaneously replacing it with a generally similar structure that meets relevant standards for seismic strength and is designed to better accommodate modern Navy ships. Demolition and construction are planned to occur in two phases to maintain the fueling capabilities of the existing pier while the new pier is being constructed. During the third year of construction (the specified activity considered under this proposed IHA), approximately 226 piles would be installed (including six 30-in steel pipe piles, 88 30 x 24-in concrete piles, and 132 16-in concrete-filled fiberglass piles). Demolition of the existing pier would continue concurrently, including the removal of approximately one hundred steel and concrete piles and twenty concrete-filled steel caissons. Removals may occur by multiple means, including vibratory removal, pile cutter, dead pull, and diamond belt saw, as determined to be most effective. Construction work under this proposed IHA is anticipated to require a total of 115 days of in-water work. All steel piles will be driven with a vibratory hammer for their initial embedment depths and finished with an impact hammer, as necessary.

The proposed actions with the potential to incidentally harass marine mammals within the waters adjacent to NBPL are vibratory and impact pile installation and removal of piles via pile cutter. Vibratory pile removal is not planned but could occur if deemed the most effective technique to remove a given pile; because this technique is not expected to occur we do not consider it separately in this document from vibratory pile driving. Concurrent use of multiple pile driving rigs is not planned; however, pile removal conducted as part of demolition activities (which could occur via a number of techniques) may occur concurrently with pile installation conducted as part of construction activities.

Dates and Duration

The entire project is scheduled to occur from 2013–17; the proposed activities that would be authorized by this IHA, during the third year of work, would occur for one year from the date of issuance of this proposed IHA. Under the terms of a memorandum of understanding (MOU) between the Navy and the U.S. Fish and Wildlife Service (FWS), all noise- and turbidity-producing in-water activities in designated least tern foraging habitat are to be avoided during the period when least terns are present and engaged in nesting and foraging (a window from approximately May 1 through September 15). However, it is possible that in-water work, as described below, could occur at any time during the period of validity of this proposed IHA. The conduct of any such work would be subject to approval from FWS under the terms of the MOU. We expect that in-water work would primarily occur from October through April. In-water pile driving and removal work using pile cutters or vibratory drivers would be limited to 115 days in total under this proposed IHA. Pile driving would occur during normal working hours (approximately 7 a.m. to 6 p.m.).

Specific Geographic Region

NBPL is located on the peninsula of Point Loma near the mouth and along the northern edge of San Diego Bay (see Figures 1–1 and 1–2 in the Navy's application). San Diego Bay is a narrow, crescent-shaped natural embayment oriented northwest-southeast with an approximate length of 24 km and a total area of roughly 4,500 ha. The width of the bay ranges from 0.3 to 5.8 km, and depths range from 23 m mean lower low water (MLLW) near the tip of Ballast Point to less than 2 m at the southern end (see Figure 2–1 of the Navy's application). San Diego Bay is a heavily urbanized area with a mix of industrial, military, and recreational uses. The northern and central portions of the bay have been shaped by historic dredging to support large ship navigation. Dredging occurs as necessary to maintain constant depth within the navigation channel. Outside the navigation channel, the bay floor consists of platforms at depths that vary slightly. Sediments in northern San Diego Bay are relatively sandy as tidal currents tend to keep the finer silt and clay fractions in suspension, except in harbors and elsewhere in the lee of structures where water movement is diminished. Much of the shoreline consists of riprap and manmade structures. San Diego Bay is heavily used by commercial, recreational, and military vessels, with an average of over 80,000 vessel movements (in or out of the bay) per year (not including recreational boating within the Bay) (see Table 2–2 of the Navy's application). For more information about the specific geographic region, please see section 2.3 of the Navy's application.

Detailed Description of Activities

In order to provide context, we described the entire project in our**Federal Register** notice of proposed authorization associated with the first-year IHA (78 FR 30873; May 23, 2013). Please see that document for an overview of the entire fuel pier replacement project, or see the Navy's Environmental Assessment (2013) for more detail. Here, we provide an overview of relevant construction methods before describing only the specific project portions scheduled for completion during the third work window. Please see section 1 of the Navy's application for full detail of construction scheduling for this period. Approximately 498 piles in total are planned to be installed for the project, including steel, concrete, and plastic piles. For the second year of work, approximately 226 steel and concrete piles would be installed. Tables 1 and 2 detail the piles to be installed and removed, respectively, under this proposed IHA.

Methods, Pile Installation—Vibratory hammers, which can be used to either install or extract a pile, contain a system of counter-rotating eccentric weights powered by hydraulic motors and are designed in such a way that horizontal vibrations cancel out, while vertical vibrations are transmitted into the pile. The pile driving machine is lifted and positioned over the pile by means of an excavator or crane, and is fastened to the pile by a clamp and/or bolts. The vibrations produced cause liquefaction of the substrate surrounding the pile, enabling the pile to be extracted or driven into the ground using the weight of the pile plus the hammer. Impact hammers use a rising and falling piston to repeatedly strike a pile and drive it into the ground.

We generally require that vibratory driving be used to the maximum extent feasible, considering project design requirements and site conditions. Steel piles are typically vibratory-driven for their initial embedment depths or to refusal and finished with an impact hammer for proofing or until the pile meets structural requirements (potentially an approximate 25–125 blows), as necessary. Proofing involves striking a driven pile with an impact hammer to verify that it provides the required load-bearing capacity, as indicated by the number of hammer blows per foot of pile advancement. Non-steel piles are typically impact-driven for their entire embedment depth, in part because non-steel piles are often displacement piles (as opposed

to pipe piles) and require some impact to allow substrate penetration.

Methods, Pile Removal—There are multiple methods for pile removal. Piles were generally removed during the second year construction period by cutting at the mudline, which can be accomplished in various ways. Piles are expected to be removed during this third-year IHA primarily using a pile cutter, which is a bladed hydraulic device that shears the pile off. The preferred method of removing the caisson elements is to cut them at the mudline and then into two sections using a diamond wire cutting saw. Existing caisson elements would be removed with a clamshell, which is a dredging bucket consisting of two similar halves that open/close at the bottom and are hinged at the top. The clamshell would be used to grasp and lift large components.

Piles may also be removed by simply dry pulling, or pulling after the pile has been loosened using a vibratory hammer or a pneumatic chipper. Jetting (the application of a focused stream of water under high pressure) may be another option to loosen piles that could not be removed through the previous procedures. Pile removal is not generally expected to require the use of vibratory extraction or pneumatic chipping, and these methods are included here as contingency in the event other methods of extraction are not successful.

TABLE 1—DETAILS OF PILES TO BE INSTALLED

Purpose	Location	Planned timing	Pile type	Pile number
Dolphin batter piles	North mooring	Fall 2015	30-in steel pipe	6
Fender piles	Bayward side of new pier	Fall–Winter 2015	24 x 30-in concrete	88
Fender piles	Bayward side of new pier	Fall–Winter 2015	16-in concrete-filled fiberglass	132

Construction—Construction work during the proposed third year of activity would include driving of steel pipe piles to complete construction of the northern mooring dolphin and driving of concrete and concrete-filled fiberglass fender piles on the bayward section of the new pier. The concrete piles (primary fender piles) will be installed by first stabbing with the crane, before being jetted to within approximately five feet of design tip elevation, then driven using an impact hammer to tip elevation. The concrete-filled fiberglass piles (secondary and corner fender piles) would be stabbed with the crane before being impact driven. This work is expected to require a total of 61 days.

Demolition—Demolition of the north segment of the existing pier will be conducted during construction activity. Much of the demolition work will be above-water, involving removal of decking, utilities, and appurtenances, but in-water structure removal will also occur, as described above under ''Methods, Pile Removal.'' The in-water portion of demolition work planned during the period of this proposed IHA is expected to require 54 days in total. Pile removal using no-impact methods (*e.g.,* dry pull) may continue outside the in-water work window.

TABLE 2—DETAILS OF PILES TO BE REMOVED

Pile type	Number
Concrete fender piles (14-, 16-, and 24-in)	56
Plastic fender piles (13-in)	34
Temporary steel piles (30-in)	12
Concrete-filled steel caissons	20

Description of Work Accomplished

During the first in-water work season, two primary activities were conducted: Relocation of the Marine Mammal Program and the Indicator Pile Program (IPP). During the second in-water work season, the IPP was concluded and simultaneous construction of the new pier and demolition of the old pier begun.

The Navy Marine Mammal Program, administered by Space and Naval Warfare Systems Command Systems Center, was moved approximately three kilometers to the Naval Mine and Anti-submarine Warfare Command (see Figures 1–1 and 1–2 of the Navy's Year 1 monitoring report). Although not subject to the MMPA, SSC's working animals were temporarily relocated so that they will not be affected by the project. Over the course of 25 in-water construction days from January 28 to March 13, 2014, the Navy removed thirty and installed 81 concrete piles (12- and 16-in). See Table 3–2 of the Navy's Year 1 monitoring report for details. Installation was accomplished via a D19–42 American Pile Driving Equipment, Inc. (APE) diesel hammer with energy capacity of 23,566–42,800 ft-lbs and fitted with a hydraulic tripping cylinder with four adjustable power settings that could be reset while driving. Pile removal was accomplished by jetting and dead pull.

The IPP was designed to validate the length of pile required and the method of installation (vibratory and impact) as well as to validate acoustic sound pressure levels of the various sizes and locations (*i.e.,* shallow versus deeper water) of installed piles. Nine steel pipe test piles were vibratory- and impact-driven over ten work days from April 28 to May 15, 2014, including two 30-in and seven 36-in piles. All piles were initially installed initially using an APE Variable Moment 250 VM Vibratory Hammer Extractor powered by a model 765 hydraulic power source creating a maximum driving force of 2,389 kilonewtons (269 tons). Impact pile driving equipment consisted of a single acting diesel impact hammer model D62–22 DELMAG with energy capacity of 76,899–153,799 ft-lbs and fitted with a hydraulic tripping cylinder with four adjustable power settings that could be reset while driving. One additional 36-in pile was installed in Spring 2015, under the Year 2 IHA, to conclude the IPP.

Production pile driving associated with construction of the new pier was begun in Fall 2014 and continued into Spring 2015. Both vibratory and impact driving was used, as described above, to install 238 steel pipe piles (four 18-in, 31 30-in, and 203 36-in diameter). Hammers used were the same as those described above. Demolition activity was begun in Spring 2015, and included the removal of four caissons, eighteen concrete fender piles, and a portion of concrete decking from the existing fuel pier. In total, this work consisted of one hundred days of activity from October 16, 2014, through April 29, 2015. Of these one hundred days of in-water work, eighteen days involved only impact driving, fifteen days included only vibratory driving, and 65 days where both types of driving occurred. The remaining two days involved only demolition activities. Please see the Year 2 monitoring report for more information. Additional work may be conducted under the existing IHA between September 15 and October 7, 2015, in which case the submitted

monitoring report would be amended as necessary.

Description of Marine Mammals in the Area of the Specified Activity

There are four marine mammal species which are either resident or have known seasonal occurrence in the vicinity of San Diego Bay, including the California sea lion, harbor seal, bottlenose dolphin, and gray whale (see Figures 3–1 through 3–4 and 4–1 in the Navy's application). In addition, common dolphins (see Figure 3–4 in the Navy's application), the Pacific white-sided dolphin, Risso's dolphin, and northern elephant seals are known to occur in deeper waters in the vicinity of San Diego Bay and/or have been recently observed within the bay. Although the latter three species of cetacean would not generally be expected to occur within the project area, the potential for changes in occurrence patterns due to developing El Niño conditions in conjunction with recent observations leads us to believe that authorization of incidental take is warranted. Common dolphins have been documented regularly at the Navy's nearby Silver Strand Training Complex, and were observed in the project area during both previous years of project activity. The Pacific white-sided dolphin has been sighted along a previously used transect on the opposite side of the Point Loma peninsula (Merkel and Associates, 2008) and there were several observations of Pacific white-sided dolphins during Year 2 monitoring. Risso's dolphin is fairly common in southern California coastal waters (*e.g.,* Campbell *et al.,* 2010), and could occur in the bay. Northern elephant seals are included based on their continuing increase in numbers along the Pacific coast (Carretta *et al.,* 2015) and the likelihood that animals that reproduce on the islands offshore of Baja California and mainland Mexico—where the population is also increasing—could move through the project area during migration, as well as the observation of a juvenile seal near the Fuel Pier in April 2015.

Note that common dolphins could be either short-beaked (*Delphinus delphis delphis*) or long-beaked (*D. capensis capensis*). While it is likely that common dolphins observed in the project area would be long-beaked, as it is the most frequently stranded species in the area from San Diego Bay to the U.S.-Mexico border (Danil and St. Leger, 2011), the species distributions overlap and it is unlikely that observers would be able to differentiate them in the field. Therefore, we consider that any common dolphins observed—and any incidental take of common dolphins—could be either species.

In addition, other species that occur in the Southern California Bight may have the potential for isolated occurrence within San Diego Bay or just offshore. In particular, a short-finned pilot whale (*Globicephala macrorhynchus*) was observed off Ballast Point, and a Steller sea lion (*Eumetopias jubatus monteriensis*) was seen in the project area during Year 2. These species are not typically observed near the project area and, unlike the previously mentioned species, we do not believe it likely that they will occur in the future. Given the unlikelihood of their exposure to sound generated from the project, these species are not considered further.

We have reviewed the Navy's detailed species descriptions, including life history information, for accuracy and completeness and refer the reader to Sections 3 and 4 of the Navy's application instead of reprinting the information here. Please also refer to NMFS' Web site (*www.nmfs.noaa.gov/pr/species/mammals*) for generalized species accounts and to the Navy's Marine Resource Assessment for the Southern California and Point Mugu Operating Areas, which provides information regarding the biology and behavior of the marine resources that may occur in those operating areas (DoN, 2008). The document is publicly available at *www.navfac.navy.mil/products_and_services/ev/products_and_services/marine_resources/marine_resource_assessments.html* (accessed August 21, 2015). In addition, we provided information for the potentially affected stocks, including details of stock-wide status, trends, and threats, in our **Federal Register** notices of proposed authorization associated with the first- and second-year IHAs (78 FR 30873; May 23, 2013 and 79 FR 53026; September 5, 2014) and refer the reader to those documents rather than reprinting the information here.

Table 3 lists the marine mammal species with expected potential for occurrence in the vicinity of NBPL during the project timeframe and summarizes key information regarding stock status and abundance. See also Figures 3–1 through 3–5 of the Navy's application for observed occurrence of marine mammals in the project area. Taxonomically, we follow Committee on Taxonomy (2014). Please see NMFS' Stock Assessment Reports (SAR), available at *www.nmfs.noaa.gov/pr/sars,* for more detailed accounts of these stocks' status and abundance. All potentially affected species are addressed in the Pacific SARs (Carretta *et al.,* 2015).

TABLE 3—MARINE MAMMALS POTENTIALLY PRESENT IN THE VICINITY OF NBPL

Species	Stock	ESA/MMPA status; Strategic (Y/N) [1]	Stock abundance (CV, N_{min}, most recent abundance survey) [2]	PBR [3]	Annual M/SI [4]	Relative occurrence in San Diego Bay; season of occurrence
Order Cetartiodactyla—Cetacea—Superfamily Mysticeti (baleen whales)						
Family Eschrichtiidae						
Gray whale	Eastern North Pacific.	-; N	20,990 (0.05; 20,125; 2011).	624	[6] 132	Occasional migratory visitor; winter.
Superfamily Odontoceti (toothed whales, dolphins, and porpoises)						
Family Delphinidae						
Bottlenose dolphin	California coastal	-; N	323 [5] (0.13; 290; 2005).	2.4	0.2	Common; year-round.
Short-beaked common dolphin.	California/Oregon/Washington.	-; N	411,211 (0.21; 343,990; 2008).	3,440	64	Occasional; year-round (but more common in warm season).
Long-beaked common dolphin.	California	-; N	107,016 (0.42; 76,224; 2009).	610	13.8	Occasional; year-round (but more common in warm season).

TABLE 3—MARINE MAMMALS POTENTIALLY PRESENT IN THE VICINITY OF NBPL—Continued

Species	Stock	ESA/ MMPA status; Strategic (Y/N) [1]	Stock abundance (CV, N_{min}, most recent abundance survey) [2]	PBR [3]	Annual M/SI [4]	Relative occurrence in San Diego Bay; season of occurrence
Pacific white-sided dolphin.	California/Oregon/ Washington.	-; N	26,930 (0.28; 21,406; 2008).	171	17.8	Uncommon; year-round.
Risso's dolphin	California/Oregon/ Washington.	-; N	6,272 (0.3; 4,913; 2008).	39	1.6	Rare; year-round (but more common in cool season).
Order Carnivora—Superfamily Pinnipedia						
Family Otariidae (eared seals and sea lions)						
California sea lion	U.S.	-; N	296,750 (n/a; 153,337; 2011).	9,200	389	Abundant; year-round.
Family Phocidae (earless seals)						
Harbor seal	California	-; N	30,968 (n/a; 27,348; 2012).	1,641	43	Common; year-round.
Northern elephant seal.	California breeding.	-; N	179,000 (n/a; 81,368; 2010).	4,882	8.8	Rare; year-round.

[1]Endangered Species Act (ESA) status: Endangered (E), Threatened (T)/MMPA status: Depleted (D). A dash (-) indicates that the species is not listed under the ESA or designated as depleted under the MMPA. Under the MMPA, a strategic stock is one for which the level of direct human-caused mortality exceeds PBR (see footnote 3) or which is determined to be declining and likely to be listed under the ESA within the foreseeable future. Any species or stock listed under the ESA is automatically designated under the MMPA as depleted and as a strategic stock.

[2]CV is coefficient of variation; N_{min} is the minimum estimate of stock abundance. In some cases, CV is not applicable. For certain stocks of pinnipeds, abundance estimates are based upon observations of animals (often pups) ashore multiplied by some correction factor derived from knowledge of the species (or similar species) life history to arrive at a best abundance estimate; therefore, there is no associated CV. In these cases, the minimum abundance may represent actual counts of all animals ashore.

[3]Potential biological removal, defined by the MMPA as the maximum number of animals, not including natural mortalities, that may be removed from a marine mammal stock while allowing that stock to reach or maintain its optimum sustainable population size (OSP).

[4]These values, found in NMFS' SARs, represent annual levels of human-caused mortality plus serious injury from all sources combined (*e.g.,* commercial fisheries, subsistence hunting, ship strike). Annual M/SI often cannot be determined precisely and is in some cases presented as a minimum value.

[5]This value is based on photographic mark-recapture surveys conducted along the San Diego coast in 2004–05, but is considered a likely underestimate, as it does not reflect that approximately 35 percent of dolphins encountered lack identifiable dorsal fin marks (Defran and Weller, 1999). If 35 percent of all animals lack distinguishing marks, then the true population size would be closer to 450–500 animals (Carretta *et al.,* 2015).

[6]Includes annual Russian harvest of 127 whales.

Gray Whale

Two populations of gray whales are recognized, Eastern and Western North Pacific (ENP and WNP). The two populations have historically been considered geographically isolated from each other; however, recent data from satellite-tracked whales indicates that there is some overlap between the stocks. Two WNP whales were tracked from Russian foraging areas along the Pacific rim to Baja California (Mate *et al.,* 2011), and, in one case where the satellite tag remained attached to the whale for a longer period, a WNP whale was tracked from Russia to Mexico and back again (IWC, 2012). Between 22–24 WNP whales are known to have occurred in the eastern Pacific through comparisons of ENP and WNP photo-identification catalogs (IWC, 2012; Weller *et al.,* 2011; Burdin *et al.,* 2011), and WNP animals comprised 8.1 percent of gray whales identified during a recent field season off of Vancouver Island (Weller *et al.,* 2012). In addition, two genetic matches of WNP whales have been recorded off of Santa Barbara, CA (Lang *et al.,* 2011). More recently, Urban *et al.* (2013) compared catalogs of photo-identified individuals from Mexico with photographs of whales off Russia and reported a total of 21 matches. Therefore, a portion of the WNP population is assumed to migrate, at least in some years, to the eastern Pacific during the winter breeding season.

However, only ENP whales are expected to occur in the project area. The likelihood of any gray whale being exposed to project sound to the degree considered in this document is already low, as it would require a migrating whale to linger for an extended period of time, or for multiple migrating whales to linger for shorter periods of time. While such an occurrence is not unknown, it is uncommon. Further, of the approximately 20,000 gray whales migrating through the Southern California Bight, it is extremely unlikely that one found in San Diego Bay would be one of the approximately twenty WNP whales that have been documented in the eastern Pacific (less than one percent probability). The likelihood that a WNP whale would be exposed to elevated levels of sound from the specified activities is insignificant and discountable and WNP whales are not considered further in this document.

Potential Effects of the Specified Activity on Marine Mammals and Their Habitat

We provided discussion of the potential effects of the specified activity on marine mammals and their habitat in our **Federal Register** notices of proposed authorization associated with the first- and second-year IHAs (78 FR 30873; May 23, 2013 and 79 FR 53026; September 5, 2014). The specified activity associated with this proposed IHA is substantially similar to those considered for the first- and second-year IHAs and the potential effects of the specified activity are the same as those identified in those documents. Therefore, we do not reprint the information here but refer the reader to those documents.

In the aforementioned **Federal Register** notices, we also provided general background information on sound and marine mammal hearing and a description of sound sources and ambient sound and refer the reader to

those documents. However, because certain terms are used frequently in this document, we provide brief definitions of relevant acoustic terminology below:

• Sound pressure level (SPL): Sound pressure is the force per unit area, usually expressed in microPascals (μPa), where one Pascal equals one Newton exerted over an area of one square meter. The SPL is expressed in decibels (dB) as twenty times the logarithm to the base ten of the ratio between the pressure exerted by the sound to a referenced sound pressure. SPL is the quantity that is directly measured by a sound level meter. For underwater sound, SPL in dB is referenced to one microPascal (re 1 μPa), unless otherwise stated.For airborne sound, SPL in dB is referenced to 20 microPascals (re 20 μPa), unless otherwise stated.

• Frequency: Frequency is expressed in terms of oscillations, or cycles, per second. Cycles per second are commonly referred to as hertz (Hz). Typical human hearing ranges from 20 Hz to 20 kilohertz (kHz).

• Peak sound pressure: The instantaneous maximum of the absolute positive or negative pressure over the frequency range from 20 Hz to 20 kHz and presented in dB.

• Root mean square (rms) SPL: For impact pile driving, overall dB rms levels are characterized by integrating sound for each waveform across ninety percent of the acoustic energy in each wave and averaging all waves in the pile driving event. This value is referred to as the rms 90%. With this method, the time averaging per pulse varies.

• Sound Exposure Level (SEL): A measure of energy, specifically the dB level of the time integral of the squared-instantaneous sound pressure, normalized to a one second period. It is an useful metric for assessing cumulative exposure because it enables sounds of differing duration, to be compared in terms of total energy. The accumulated SEL (SEL_{cum}) is used to describe the SEL from multiple events (*e.g.,* many pile strikes). This can be calculated directly as a logarithmic sum of the individual single-strike SELs for the pile strikes that were used to install the pile.

• Level Z weighted (unweighted), equivalent (LZ_{eq}): LZ_{eq} is a value recorded by the SLM that represents SEL SPL over a specified time period or interval. The LZeq is most typically referred to in one-second intervals or over an entire event.

• Level Z weighted (unweighted), fast (LZF_{max}): LZF_{max} is a value recorded by the SLM that represents the maximum rms value recorded for any 125 millisecond time frame during each individual recording.

Proposed Mitigation

In order to issue an IHA under section 101(a)(5)(D) of the MMPA, NMFS must set forth the permissible methods of taking pursuant to such activity, and other means of effecting the least practicable impact on such species or stock and its habitat, paying particular attention to rookeries, mating grounds, and areas of similar significance, and on the availability of such species or stock for taking for certain subsistence uses.

The mitigation strategies described below largely follow those required and successfully implemented under the first- and second-year IHAs. For this proposed IHA, data from acoustic monitoring conducted during the first two years of work was used to estimate zones of influence (ZOIs; see ''Estimated Take by Incidental Harassment''); these values were used to develop mitigation measures for pile driving activities at NBPL. The ZOIs effectively represent the mitigation zone that would be established around each pile to prevent Level A harassment to marine mammals, while providing estimates of the areas within which Level B harassment might occur. In addition, the Navy has defined buffers to the estimated Level A harassment zones to further reduce the potential for Level A harassment. In addition to the measures described later in this section, the Navy would conduct briefings between construction supervisors and crews, marine mammal monitoring team, acoustic monitoring team, and Navy staff prior to the start of all pile driving activity, and when new personnel join the work, in order to explain responsibilities, communication procedures, marine mammal monitoring protocol, and operational procedures.

Monitoring and Shutdown for Pile Driving

The following measures would apply to the Navy's mitigation through shutdown and disturbance zones:

Shutdown Zone—For all pile driving and removal activities, the Navy will establish a shutdown zone intended to contain the area in which SPLs equal or exceed the 180/190 dB rms acoustic injury criteria. The purpose of a shutdown zone is to define an area within which shutdown of activity would occur upon sighting of a marine mammal (or in anticipation of an animal entering the defined area), thus preventing injury of marine mammals (serious injury or death are unlikely outcomes even in the absence of mitigation measures). Estimated radial distances to the relevant thresholds are shown in Table 7. For certain activities, the shutdown zone would not exist because source levels are lower than the threshold, or the source levels indicate that the radial distance to the threshold would be less than 10 m. However, a minimum shutdown zone of 20 m will be established during all pile driving and removal activities, regardless of the estimated zone. This represents a buffer of 10 m added to the previously implemented 10 m minimum shutdown zone. In addition the Navy proposes to effect a buffered shutdown zone that is intended to significantly reduce the potential for Level A harassment given that, in particular, California sea lions are quite abundant in the project area and bottlenose dolphins may surface unpredictably and move erratically in an area with a large amount of construction equipment. The Navy considered typical swim speeds (Godfrey, 1985; Lockyer and Morris, 1987; Fish, 1997; Fish *et al.,* 2003; Rohr *et al.,* 2002; Noren *et al.,* 2006) and past field experience (*e.g.,* typical elapsed time from observation of an animal to shutdown of equipment) in initially defining these buffered zones, and then evaluated the practicality and effectiveness of the zones during the Year 2 construction period. The Navy will add a buffer of 75 m to the 190 dB zone for impact driving of steel piles (doubling the effective zone to 150 m radius) and will add a buffer of 100 m to the 180 dB zone for impact driving of steel piles (increasing the effective zone to 450 m). These zones are also shown in Table 7. These precautionary measures are intended to prevent the already unlikely possibility of physical interaction with construction equipment and to establish a precautionary minimum zone with regard to acoustic effects.

Disturbance Zone—Disturbance zones are the areas in which SPLs equal or exceed 160 and 120 dB rms (for impulse and continuous sound, respectively). Disturbance zones provide utility for monitoring conducted for mitigation purposes (*i.e.,* shutdown zone monitoring) by establishing monitoring protocols for areas adjacent to the shutdown zones. Monitoring of disturbance zones enables observers to be aware of and communicate the presence of marine mammals in the project area but outside the shutdown zone and thus prepare for potential shutdowns of activity. However, the primary purpose of disturbance zone monitoring is for documenting incidents of Level B harassment; disturbance zone monitoring is discussed in greater detail

later (see ''Proposed Monitoring and Reporting''). Nominal radial distances for disturbance zones are shown in Table 7.

In order to document observed incidences of harassment, monitors record all marine mammal observations, regardless of location. The observer's location, as well as the location of the pile being driven, is known from a GPS. The location of the animal is estimated as a distance from the observer, which is then compared to the location from the pile. If acoustic monitoring is being conducted for that pile, a received SPL may be estimated, or the received level may be estimated on the basis of past or subsequent acoustic monitoring. It may then be determined whether the animal was exposed to sound levels constituting incidental harassment in post-processing of observational and acoustic data, and a precise accounting of observed incidences of harassment created. Therefore, although the predicted distances to behavioral harassment thresholds are useful for estimating incidental harassment for purposes of authorizing levels of incidental take, actual take may be determined in part through the use of empirical data.

Acoustic measurements will continue during the third year of project activity and zones would be adjusted as indicated by empirical data. Please see the Navy's Acoustic and Marine Species Monitoring Plan (Monitoring Plan; available at *www.nmfs.noaa.gov/pr/permits/incidental/construction.htm*) for full details.

Monitoring Protocols—Monitoring would be conducted before, during, and after pile driving activities. In addition, observers shall record all incidents of marine mammal occurrence, regardless of distance from activity, and shall document any behavioral reactions in concert with distance from piles being driven. Observations made outside the shutdown zone will not result in shutdown; that pile segment would be completed without cessation, unless the animal approaches or enters the shutdown zone, at which point all pile driving activities would be halted. Monitoring will take place from fifteen minutes prior to initiation through thirty minutes post-completion of pile driving activities. Pile driving activities include the time to remove a single pile or series of piles, as long as the time elapsed between uses of the pile driving equipment is no more than thirty minutes. Please see the Monitoring Plan for full details of the monitoring protocols.

The following additional measures apply to visual monitoring:

(1) Monitoring will be conducted by qualified observers, who will be placed at the best vantage point(s) practicable (as defined in the Monitoring Plan) to monitor for marine mammals and implement shutdown/delay procedures when applicable by calling for the shutdown to the hammer operator. Qualified observers are trained biologists, with the following minimum qualifications:

- Visual acuity in both eyes (correction is permissible) sufficient for discernment of moving targets at the water's surface with ability to estimate target size and distance; use of binoculars may be necessary to correctly identify the target;
- Advanced education in biological science or related field (undergraduate degree or higher is required);
- Experience and ability to conduct field observations and collect data according to assigned protocols (this may include academic experience);
- Experience or training in the field identification of marine mammals, including the identification of behaviors;
- Sufficient training, orientation, or experience with the construction operation to provide for personal safety during observations;
- Writing skills sufficient to prepare a report of observations including but not limited to the number and species of marine mammals observed; dates and times when in-water construction activities were conducted; dates and times when in-water construction activities were suspended to avoid potential incidental injury from construction sound of marine mammals observed within a defined shutdown zone; and marine mammal behavior; and
- Ability to communicate orally, by radio or in person, with project personnel to provide real-time information on marine mammals observed in the area as necessary.

(2) Prior to the start of pile driving activity, the shutdown zone will be monitored for fifteen minutes to ensure that it is clear of marine mammals. Pile driving will only commence once observers have declared the shutdown zone clear of marine mammals; animals will be allowed to remain in the shutdown zone (*i.e.,* must leave of their own volition) and their behavior will be monitored and documented. The shutdown zone may only be declared clear, and pile driving started, when the entire shutdown zone is visible (*i.e.,* when not obscured by dark, rain, fog, etc.). In addition, if such conditions should arise during impact pile driving that is already underway, the activity would be halted.

(3) If a marine mammal approaches or enters the shutdown zone during the course of pile driving operations, activity will be halted and delayed until either the animal has voluntarily left and been visually confirmed beyond the shutdown zone or fifteen minutes have passed without re-detection of the animal. Monitoring will be conducted throughout the time required to drive a pile and for thirty minutes following the conclusion of pile driving.

Sound Attenuation Devices

The use of bubble curtains to reduce underwater sound from impact pile driving was considered prior to the start of the project but was determined to not be practicable. Use of a bubble curtain in a channel with substantial current may not be effective, as unconfined bubbles are likely to be swept away and confined curtain systems may be difficult to deploy effectively in high currents. Data gathered during monitoring of construction on the San Francisco-Oakland Bay Bridge indicated that no reduction in the overall linear sound level resulted from use of a bubble curtain in deep water with relatively strong current, and the distance to the 190 dB zone was considered to be the same with and without the bubble curtain (Illingworth & Rodkin, 2001). During project monitoring for pile driving associated with the Richmond-San Rafael Bridge, also in San Francisco Bay, it was observed that performance in moderate current was significantly reduced (Oestman *et al.,* 2009). Lucke *et al.* (2011) also note that the effectiveness of most currently used curtain designs may be compromised in stronger currents and greater water depths. We believe that conditions (relatively deep water and strong tidal currents of up to 3 kn) at the project site would disperse the bubbles and compromise the effectiveness of sound attenuation.

Timing Restrictions

In order to avoid impacts to least tern populations when they are most likely to be foraging and nesting, in-water work will be concentrated from October 1–April 1 or, depending on circumstances, to April 30. However, this limitation is in accordance with agreements between the Navy and FWS, and is not a requirement of this proposed IHA. All in-water construction activities would occur only during daylight hours (sunrise to sunset).

Soft Start

The use of a soft start procedure is believed to provide additional protection to marine mammals by warning or providing a chance to leave the area prior to the hammer operating at full capacity, and typically involves a requirement to initiate sound from the hammer at reduced energy followed by a waiting period. This procedure is repeated two additional times. It is difficult to specify the reduction in energy for any given hammer because of variation across drivers and, for impact hammers, the actual number of strikes at reduced energy will vary because operating the hammer at less than full power results in ''bouncing'' of the hammer as it strikes the pile, resulting in multiple ''strikes.'' The project will utilize soft start techniques for both impact and vibratory pile driving of steel piles. We require the Navy to initiate sound from vibratory hammers for fifteen seconds at reduced energy followed by a thirty-second waiting period, with the procedure repeated two additional times. For impact driving, we require an initial set of three strikes from the impact hammer at reduced energy, followed by a thirty-second waiting period, then two subsequent three strike sets. Soft start will be required at the beginning of each day's pile driving work and at any time following a cessation of pile driving of thirty minutes or longer; these requirements are specific to both vibratory and impact driving and the requirement. For example, the requirement to implement soft start for impact driving is independent of whether vibratory driving has occurred within the past thirty minutes.

We have carefully evaluated the Navy's proposed mitigation measures and considered their effectiveness in past implementation to preliminarily determine whether they are likely to effect the least practicable impact on the affected marine mammal species and stocks and their habitat. Our evaluation of potential measures included consideration of the following factors in relation to one another: (1) The manner in which, and the degree to which, the successful implementation of the measure is expected to minimize adverse impacts to marine mammals, (2) the proven or likely efficacy of the specific measure to minimize adverse impacts as planned; and (3) the practicability of the measure for applicant implementation.

Any mitigation measure(s) we prescribe should be able to accomplish, have a reasonable likelihood of accomplishing (based on current science), or contribute to the accomplishment of one or more of the general goals listed below:

(1) Avoidance or minimization of injury or death of marine mammals wherever possible (goals 2, 3, and 4 may contribute to this goal).

(2) A reduction in the number (total number or number at biologically important time or location) of individual marine mammals exposed to stimuli expected to result in incidental take (this goal may contribute to 1, above, or to reducing takes by behavioral harassment only).

(3) A reduction in the number (total number or number at biologically important time or location) of times any individual marine mammal would be exposed to stimuli expected to result in incidental take (this goal may contribute to 1, above, or to reducing takes by behavioral harassment only).

(4) A reduction in the intensity of exposure to stimuli expected to result in incidental take (this goal may contribute to 1, above, or to reducing the severity of behavioral harassment only).

(5) Avoidance or minimization of adverse effects to marine mammal habitat, paying particular attention to the prey base, blockage or limitation of passage to or from biologically important areas, permanent destruction of habitat, or temporary disturbance of habitat during a biologically important time.

(6) For monitoring directly related to mitigation, an increase in the probability of detecting marine mammals, thus allowing for more effective implementation of the mitigation.

Based on our evaluation of the Navy's proposed measures, as well as any other potential measures that may be relevant to the specified activity, we have preliminarily determined that the proposed mitigation measures provide the means of effecting the least practicable impact on marine mammal species or stocks and their habitat, paying particular attention to rookeries, mating grounds, and areas of similar significance.

Proposed Monitoring and Reporting

In order to issue an IHA for an activity, section 101(a)(5)(D) of the MMPA states that NMFS must set forth ''requirements pertaining to the monitoring and reporting of such taking''. The MMPA implementing regulations at 50 CFR 216.104 (a)(13) indicate that requests for incidental take authorizations must include the suggested means of accomplishing the necessary monitoring and reporting that will result in increased knowledge of the species and of the level of taking or impacts on populations of marine mammals that are expected to be present in the proposed action area.

Any monitoring requirement we prescribe should improve our understanding of one or more of the following:

- Occurrence of marine mammal species in action area (*e.g.,* presence, abundance, distribution, density).
- Nature, scope, or context of likely marine mammal exposure to potential stressors/impacts (individual or cumulative, acute or chronic), through better understanding of: (1) Action or environment (*e.g.,* source characterization, propagation, ambient noise); (2) Affected species (*e.g.,* life history, dive patterns); (3) Co-occurrence of marine mammal species with the action; or (4) Biological or behavioral context of exposure (*e.g.,* age, calving or feeding areas).
- Individual responses to acute stressors, or impacts of chronic exposures (behavioral or physiological).
- How anticipated responses to stressors impact either: (1) Long-term fitness and survival of an individual; or (2) Population, species, or stock.
- Effects on marine mammal habitat and resultant impacts to marine mammals.
- Mitigation and monitoring effectiveness.

Please see the Monitoring Plan (available at *www.nmfs.noaa.gov/pr/permits/incidental/construction.htm*) for full details of the requirements for monitoring and reporting. Notional monitoring locations (for biological and acoustic monitoring) are shown in Figures 3–1 and 3–2 of the Plan. The purpose of this Plan is to provide protocols for acoustic and marine mammal monitoring implemented during pile driving and removal activities. We have preliminarily determined this monitoring plan, which is summarized here and which largely follows the monitoring strategies required and successfully implemented under the previous IHAs, to be sufficient to meet the MMPA's monitoring and reporting requirements. The previous monitoring plan was modified to integrate adaptive changes to the monitoring methodologies as well as updates to the scheduled construction activities. Monitoring objectives are as follows:

- Monitor in-water construction activities, including the implementation of in-situ acoustic monitoring efforts to continue to measure SPLs from in-water construction and demolition activities not previously monitored or validated during the previous IHAs. At minimum,

acoustic sound levels would be collected and evaluated acoustic for five piles of each type of fender pile to be installed.

- Monitor marine mammal occurrence and behavior during in-water construction activities to minimize marine mammal impacts and effectively document marine mammals occurring within ZOI boundaries.
- Continue the collection of ambient underwater sound measurements in the absence of project activities to develop a rigorous baseline for the project area.

Acoustic Measurements

The primary purpose of acoustic monitoring is to empirically verify modeled injury and behavioral disturbance zones (defined at radial distances to NMFS-specified thresholds of 160-, 180-, and 190-dB (rms) for underwater sound (where applicable) and 90- and 100-dB (unweighted) for airborne sound; see ''Estimated Take by Incidental Harassment'' below). For non-pulsed sound, distances will continue to be evaluated for attenuation to the point at which sound becomes indistinguishable from background levels. Empirical acoustic monitoring data will be used to document transmission loss values determined from measurements collected during the IPP and to examine site-specific differences in SPL and affected ZOIs on an as needed basis.

Should monitoring results indicate it is appropriate to do so, marine mammal mitigation zones would be revised as necessary to encompass actual ZOIs in subsequent years of the fuel pier replacement project. Acoustic monitoring will be conducted as specified in the approved Monitoring Plan. Please see Table 2–2 of the Plan for a list of equipment to be used during acoustic monitoring. Monitoring locations will be determined based on results of previous acoustic monitoring effort and the best professional judgment of acoustic technicians.

Some details of the methodology include:

- No acoustic data to be collected for 30-in steel piles as sufficient data has been collected for 36-in steel piles during previous two years. One airborne sound monitoring station will be maintained.
- Hydroacoustic monitoring to be conducted at source for impact driving of a minimum of five of each type of fender pile in order to document SPLs.
- Sound level meters to be deployed to continue validation of source SPLs and 160/120 dB ZOIs as documented from previous acoustic monitoring efforts.
- Source SPLs for all construction or demolition activities will be measured for the first five events of each size or type of pile or activity if not sufficiently measured and/or validated previously; Navy would conduct additional monitoring if source unexpectedly exceeds any assumed values.
- For underwater recordings, sound level meter systems will follow methods in accordance with NMFS' 2012 guidance for the collection of source levels.
- For airborne recordings, to the extent that logistics and security allow, reference recordings will be collected at approximately 15 m from the source via a sound meter with integrated microphone. Other distances may also be utilized to obtain better data if the signal cannot be isolated clearly due to other sound sources (*e.g.,* barges or generators).
- Ambient conditions will be measured at the project site in the absence of construction activities to determine background sound levels. Ambient levels will be recorded over the frequency range from 7 Hz to 20 kHz. Ambient conditions will be recorded at least three times during the IHA period consistent with NMFS' 2012 guidance for the measurement of ambient sound. Each time, data will be collected for eight-hour periods for three days during typical working hours (7 a.m. to 6 p.m., Monday through Saturday) in the absence of in-water construction activities. The three recording periods will be spaced to adequately capture variation across the notional work window (October–March).
- Environmental data would be collected including but not limited to: wind speed and direction, air temperature, humidity, surface water temperature, water depth, wave height, weather conditions and other factors that could contribute to influencing the airborne and underwater sound levels (*e.g.,* aircraft, boats).
- From all the strikes associated with each pile occurring during the Level 4 (highest energy) phase these measures will be made:
  - Mean, minimum, and maximum rms pressure level in dB
  - Mean duration of a pile strike (based on the ninety percent energy criterion)
  - Number of hammer strikes
  - Mean, minimum, and maximum single strike SEL in dB re μPa^2 sec
  - Cumulative SEL as defined by the mean single strike SEL + 10*log (# hammer strikes) in dB re μPa^2 sec
  - A frequency spectrum (pressure spectral density) in [dB re μPa^2 per Hz] based on the average of up to eight successive strikes with similar sound. Spectral resolution will be 1 Hz and the spectrum will cover nominal range from 7 Hz to 20 kHz.

Full details of acoustic monitoring requirements may be found in section 3.2 of the Navy's approved Monitoring Plan and in section 13 of the Navy's application.

Visual Marine Mammal Observations

The Navy will collect sighting data and behavioral responses to construction for marine mammal species observed in the region of activity during the period of activity. All observers will be trained in marine mammal identification and behaviors and are required to have no other construction-related tasks while conducting monitoring. The Navy will monitor the shutdown zone and disturbance zone before, during, and after pile driving as described under ''Proposed Mitigation'' and in the Monitoring Plan, with observers located at the best practicable vantage points. Notional monitoring locations are shown in Figures 3–1 and 3–2 of the Navy's Plan. Please see that plan, available at *www.nmfs.noaa.gov/pr/permits/incidental/construction.htm,* for full details of the required marine mammal monitoring. Section 4.2 of the Plan and section 13 of the Navy's application offer more detail regarding monitoring protocols. Based on our requirements, the Navy would implement the following procedures for pile driving:

- MMOs would be located at the best vantage point(s) in order to properly see the entire shutdown zone and as much of the disturbance zone as possible.
- During all observation periods, observers will use binoculars and the naked eye to search continuously for marine mammals.
- If the shutdown zones are obscured by fog or poor lighting conditions, pile driving at that location will not be initiated until that zone is visible. Should such conditions arise while impact driving is underway, the activity would be halted.
- The shutdown and disturbance zones around the pile will be monitored for the presence of marine mammals before, during, and after any pile driving or removal activity.

One MMO will be placed on the active construction/demolition platform in order to observe the respective shutdown zones for vibratory and impact pile driving or for applicable demolition activities. Monitoring would be primarily dedicated to observing the shutdown zone; however, MMOs would

record all marine mammal sightings beyond these distances provided it did not interfere with their effectiveness at carrying out the shutdown procedures. Additional land, pier, or vessel-based MMOs will be positioned to monitor the shutdown zones and the buffer zones, as notionally indicated in Figures 3–1 and 3–2 of the Navy's application. Up to five additional MMOs will be deployed during driving of steel piles, and at least one additional MMOs will be deployed during driving of fender piles and during applicable demolition activities.

Because there are different threshold distances for different types of marine mammals (pinniped and cetacean), the observation platform at the shutdown zone will concentrate on the 190 dB rms and 180 dB rms isopleths locations and station the observers and vessels accordingly. The MMOs associated with these platforms will record all visible marine mammal sightings. Confirmed takes will be registered once the sightings data has been overlaid with the isopleths identified in Table 7 and visualized (for steel piles) in Figure 6–2 of the Navy's application, or based on refined acoustic data, if amendments to the ZOIs are needed. The acousticians on board will be noting SPLs in real-time, but, to avoid biasing the observations, will not communicate that information directly to the MMOs. These platforms may move closer to, or farther from, the source depending on whether received SPLs are less than or greater than the regulatory threshold values. All MMOs will be in radio communication with each other so that the MMOs will know when to anticipate incoming marine mammal species and when they are tracking the same animals observed elsewhere.

If any species for which take is not authorized is observed by a MMO during applicable construction or demolition activities, all construction will be stopped immediately. If a boat is available, MMOs will follow the animal(s) at a minimum distance of 100 m until the animal has left the Level B ZOI. Pile driving will commence if the animal has not been seen inside the Level B ZOI for at least one hour of observation. If the animal is resighted again, pile driving will be stopped and a boat-based MMO (if available) will follow the animal until it has left the Level B ZOI.

Individuals implementing the monitoring protocol will assess its effectiveness using an adaptive approach. Monitoring biologists will use their best professional judgment throughout implementation and seek improvements to these methods when deemed appropriate. Any modifications to protocol will be coordinated between NMFS and the Navy.

Data Collection

We require that observers use approved data forms. Among other pieces of information, the Navy will record detailed information about any implementation of shutdowns, including the distance of animals to the pile and description of specific actions that ensued and resulting behavior of the animal, if any. In addition, the Navy will attempt to distinguish between the number of individual animals taken and the number of incidents of take. We require that, at a minimum, the following information be collected on the sighting forms:

- Date and time that monitored activity begins or ends;
- Construction activities occurring during each observation period;
- Weather parameters (*e.g.,* percent cover, visibility);
- Water conditions (*e.g.,* sea state, tide state);
- Species, numbers, and, if possible, sex and age class of marine mammals;
- Description of any observable marine mammal behavior patterns, including bearing and direction of travel and distance from pile driving activity, and if possible, the correlation to measured SPLs;
- Distance from pile driving activities to marine mammals and distance from the marine mammals to the observation point;
- Description of implementation of mitigation measures (*e.g.,* shutdown or delay);
- Locations of all marine mammal observations; and
- Other human activity in the area.

In addition, photographs would be taken of any gray whales observed. These photographs would be submitted to NMFS' West Coast Regional Office for comparison with photo-identification catalogs to determine whether the whale is a member of the WNP population.

Reporting

A draft report would be submitted to NMFS within 45 calendar days of the completion of marine mammal monitoring, or sixty days prior to the issuance of any subsequent IHA for this project, whichever comes first. The report will include marine mammal observations pre-activity, during-activity, and post-activity during pile driving days, and will also provide descriptions of any behavioral responses to construction activities by marine mammals and a complete description of all mitigation shutdowns and the results of those actions. A final report would be prepared and submitted within thirty days following resolution of comments on the draft report. Required contents of the monitoring reports are described in more detail in the Navy's Acoustic and Marine Species Monitoring Plan.

Monitoring Results From Previously Authorized Activities

The Navy complied with the mitigation and monitoring required under the previous authorizations for this project. Acoustic and marine mammal monitoring was implemented as required, with marine mammal monitoring occurring before, during, and after each pile driving event. During the course of Year 2 activities, the Navy did not exceed the take levels authorized under the IHA. However, the Navy did record four observations of California sea lions within the defined 190-dB shutdown zone (please see Appendix H of the Navy's monitoring report for more details and below for further discussion).

The general objectives of the monitoring plan were similar to those described above for the year three monitoring plan. For acoustic monitoring, the primary goal was to continue validation of the acoustic ZOI contours utilizing hydroacoustic measurements collected during the IPP and production pile driving to update estimated SPL contours (isopleths) developed from the transmission loss modeling effort conducted prior to the start of the project and to collect more data to validate the transmission loss model. The Navy previously conducted acoustic monitoring for pile driving of steel pile associated with the IPP and production driving and for concrete piles associated with the temporary relocation of the Navy's Marine Mammal Program.

Acoustic Monitoring Results—For a full description of acoustic monitoring methodology, please see section 2.3 of the Navy's monitoring report, including Figure 2–1 for representative monitoring locations. Results from Years 1 and 2 are displayed in Table 4. Please see our notice of proposed IHA for the Year 2 IHA (79 FR 53026; September 5, 2014) or the Navy's Year 1 monitoring report for more detailed description of monitoring accomplished during Year 1.

For acoustic monitoring associated with production pile driving, a continuous hydroacoustic monitoring systems were positioned at source (10 m from the pile), in the vicinity of the predicted 180-dB behavioral ZOI for impact driving (225–400 m), and opportunistically at far-field Level B ZOIs predicted on the basis of past monitoring and measurements of

ambient noise in the bay (see Figure 2–1 in the Navy's monitoring report). Hydrophones were deployed from the dock, barge, or moored vessel at half the water depth. Pile locations and corresponding SPL measurements of pile driving activities were partitioned into shallow water and deep water; SPLs for shallow pile driving activities were only measured intermittently because associated SPLs were previously validated. Airborne sound measurements were also collected intermittently, but in sufficient amounts to continue validation of airborne ZOIs for pinniped species. SPLs were recorded and analyzed for greater than ten percent of all pile driving of 30- 36-in steel pipe piles driven in deep water. Additionally, pile driving of temporary 18-in steel pipe piles, 36-in abutment steel pipe piles, and demolition of existing pier structural members (caissons and fender piles) were measured to document SPLs associated with each construction activity.

SPLs of pile driving and demolition activities conducted during Year 2 fell within expected levels but varied spatially relative to the existing fuel pier structure and maximum source levels for individual piles (Table 4). For both vibratory and impact pile driving methods, results from the IPP (Year 1) and 2014/2015 production pile driving (Year 2) showed that transmission loss for piles driven in shallow water inside of the existing fuel pier was greater than piles driven in deep water outside of the existing pier. Differences in depth, sediment type, and existing in-water pier/wharf structures likely accounted for variations in transmission loss and measured differences in SPLs recorded at the shutdown and far-field locations for shallow versus deep piles of the same type and size. SPLs documented during vibratory and impact pile driving of shallow and deep steel pipe piles of the same size displayed notable differences in SPLs at shutdown range and to a lesser extent at source.

Vibratory SPLs were generally as expected. Results calculated for sound source levels of two 30-in steel pipe piles and nineteen 36-in steel pipe piles showed SPLs ranging from 160–178 dB rms. Average maximum SPLs varied approximately 13 dB rms with nominal differences between pile sizes. Evaluation of transmission loss displayed similar results to previously modeled outcomes, with the distance at which vibratory sound sources levels were indistinguishable from ambient SPLs approximately 2,500–3,000 m from the source.

For impact driving, measurements during production pile driving showed maximum SPL values at source ranging from 192–204 dB rms, with the highest values being for 36-in piles driven in deeper water. Four temporary 18-in steel pipe piles were impact driven to support the existing pier structure, with reported results of 184 dB rms at 10 m. Validated SPLs of impact and vibratory pile driving of deep 36-in steel pipe piles were less than, but in relative agreement, with those estimated from the transmission loss model used to establish ZOIs for Year 2. Differences in measured ZOIs from transmission loss model results were expected given the inherent variation in pile source strength and propagation conditions, and are not considered significant.

Measurements were made during both soft start and normal driving for both vibratory and impact driving. A gradual building of SPLs during startup of vibratory pile driving can be observed (see Figure 3–2 of the Navy's monitoring report) but soft start SPLs were not notably different from full production driving and varied considerably between piles and locations based on the depth of the pile and underlying substrate. The vibratory soft start process was evaluated for five of the nineteen measured piles at both source and shutdown with corresponding soft start SPLs averaged across all three pulses of the soft start procedure and compared to full production vibratory pile driving SPLs. The resulting soft start SPLs averaged 1.8 dB rms less than full production vibratory pile driving at source; however, of the five measured events, only two showed an increased SPL during full power driving and SPLs were actually higher during soft start for one event. Soft start vibratory SPLs where mostly much lower during the initial pulse but on average where not significantly different than SPLs recorded at source or at shutdown during full production vibratory driving (see Table 3–3 of the Navy's monitoring report). Soft start SPL values for impact driving ranged between 10 and 15 dB rms lower than full energy production impact pile driving SPLs, depending on the individual pile sizes and locations (see Figure 3–8 of the Navy's monitoring report.

TABLE 4—ACOUSTIC MONITORING RESULTS

Location	Activity	Pile type	Number of piles measured	Average underwater SPL at 10 m (dB rms)	Average airborne SPL at 15 m (LZF_{max})	Measured distances to relevant zones (dB rms/dB unweighted) (m) [1]					
						120	160	180	190	90 [4]	100 [4]
NMAWC	Impact	12- and 16-in concrete	58	182	108	n/a	126	13	<10	728	105
Fuel Pier (Year 1)	Vibratory	30- and 36-in steel pipe	9	167	113	[2] 3,000	n/a	<10	<10	233	71
	Impact	36-in steel pipe	7	200		n/a	[3] 2,500	[3] 450	[3] 75		
Fuel Pier (Year 2) [7]	Vibratory	30-in steel pipe	2	165	107						
	Impact	30-in steel pipe	2	196							
	Vibratory	36-in steel pipe	31	178		2,500	n/a	<10	<10	182	78
	Impact	36-in steel pipe	31	204		n/a	2,000	350	75		
	Hydraulic cutting	24-in concrete pile	4	[5] 154							
	Diamond saw cutting	72-in caisson	4	[6] 155							

[1] Site-specific measured transmission loss values (both underwater and airborne) were used to calculate zone distances. See monitoring report for more detail.

[2] The 120-dB disturbance zone was initially modeled to be 6,470 m; however, ambient sound in the vicinity of the project site was measured at approximately 128 dB rms (see below). This value was used in conjunction with a site-specific propagation model to arrive at a predicted distance of 3,000 m at which sound should attenuate to background levels. This was supported by collection of measured dB rms values for vibratory pile driving during the IPP, as signal could not be distinguished from background at similar distance.

[3] These values are for outside piles. Measured distances to the 160/180/190 dB ZOIs for inside piles were 2,000/100/40 m (see above for discussion). Zones calculated on the basis of SPLs from 36-in piles.

[4] Distances based on impact driving.

[5] This activity was measured as an impulsive sound, as the sound production was intermittent as the hydraulic compression of the cutter broke through different layers. This sound source is considerd to be continuous for purposes of exposure estimation and mitigation.

[6] Value measured at 15 m from source.

[7] Year 2 values are maximum values rather than average. We use these in defining conservative ZOIs.

Ambient data collection was conducted in a manner consistent with NMFS' 2012 guidance for measurement of background sound. Ambient underwater and airborne sound level recordings were collected for three eight-hour days in December 2014, and March, April, and May 2015. Ambient sound level recordings were collected in the absence of construction activities, and during typical construction time periods (7 a.m. to 6 p.m.), at locations that were between 400 and 700 m from each site. Sites were chosen to minimize boat traffic effects that might impact results.

Ambient hydroacoustic sound level recordings conducted adjacent to the fuel pier project site documented per-deployment ninetieth percentile averages from 122–131 dB rms, with an overall mean of approximately 130 dB. Removal of outlying values produced a an overall fiftieth percentile value of approximately 128 dB rms, consistent with previous measured values and within expected ranges.

Marine Mammal Monitoring Results—Marine mammal monitoring was conducted as required under the IHA and as described in the Year 2 monitoring plan and in our **Federal Register** notice of proposed authorization associated with the Year 2 IHA (79 FR 53026; September 5, 2014). For a full description of monitoring methodology, please see section 2.4 of the Navy's monitoring report, including Figure 2–1 for representative monitoring locations and Figure 2–2 for monitoring zones. Monitoring protocols were managed adaptively during the course of the second-year IHA. For example, evaluated the use of the shutdown zone buffers described under ''Proposed Mitigation''.

Monitoring results are presented in Table 5. The Navy recorded all observations of marine mammals, including pre- and post-construction monitoring efforts. Animals observed during these periods or that were determined to be outside relevant ZOIs were not considered to represent incidents of take. Please see Figures 3–22, 3–27, 3–31, 3–35, 3–38, and 3–39 for locations of observations and incidents of take relative to the project sites. Take authorization for the second-year authorization was informed by an assumption that 135 days of in-water construction would occur, whereas only 100 total days actually occurred. However, the actual observed rates per day were in all cases lower than what was assumed. Therefore, we expect that the Navy would not have exceeded the take allowances even if the full 135 days had been reached. In addition to the results shown in Table 5, the Navy observed a mixed group of one bottlenose dolphin and two common dolphins, unidentified delphinids (ten sightings of 227 individuals), unidentified large whales (four sightings of nine individuals), and unidentified pinnipeds (35 sightings of 35 individuals). None of these were within an active Level B harassment zone.

As noted above, four individual California sea lions were observed within the defined 190-dB shutdown zone. After correcting for animal location based on distance and bearing relative to the observer, the distance from the animals to the piles ranged from 20–60 m. Pile driving activity was immediately halted upon observation of the animals within the shutdown zones. In all cases, the animals were observed following the shutdown and no unusual behaviors or indicators of distress were noted. Event-specific reports are available in Appendix H of the Navy's monitoring report.

There were a total of thirty sightings of dead California sea lions in the water and additional reports of emaciated individuals in the water, or on docks, piers, and barges in the vicinity of the project. All dead animals were evaluated and deemed as having died as a result of factors unrelated to the project, likely due to the unusual mortality event currently ongoing in southern California waters. All such observations were appropriately reported in accordance with the IHA and per protocols agreed-upon with NMFS' regional stranding coordinator.

TABLE 5—MARINE MAMMAL MONITORING RESULTS

Species	Total sightings	Total individuals	Total incidents of Level B take
California sea lion	5,397	7,507	[2] [3] 2,509
Harbor seal	241	248	[3] 70
Bottlenose dolphin	247	695	[3] 250
Gray whale	3	5	0
Common dolphin	20	850	38
Pacific white-sided dolphin [1]	7	27	0
Northern elephant seal [1]	2	1	0
Steller sea lion [1]	1	1	0
Short-finned pilot whale [1]	1	1	0

[1] No take was authorized for these species. A single juvenile elephant seal was observed hauled out on shore on two occasions.

[2] Twelve individuals were considered taken by Level B harassment due to exposure to airborne noise. These individuals were observed within the airborne ZOI and did not enter the water during the course of pile driving activity.

[3] Take numbers include thirteen unidentified pinnipeds and one unidentified dolphin, assumed on the basis of MMO observation notes to be eleven California sea lions, two harbor seals, and a bottlenose dolphin.

Estimated Take by Incidental Harassment

Except with respect to certain activities not pertinent here, section 3(18) of the MMPA defines ''harassment'' as: ''. . . Any act of pursuit, torment, or annoyance which (i) has the potential to injure a marine mammal or marine mammal stock in the wild [Level A harassment]; or (ii) has the potential to disturb a marine mammal or marine mammal stock in the wild by causing disruption of behavioral patterns, including, but not limited to, migration, breathing, nursing, breeding, feeding, or sheltering [Level B harassment].''

All anticipated takes would be by Level B harassment resulting from vibratory and impact pile driving or demolition and involving temporary changes in behavior. The proposed mitigation and monitoring measures (*i.e.,* buffered shutdown zones) are expected to minimize the possibility of Level A harassment such that we believe it is unlikely. We do not expect that injurious or lethal takes would occur even in the absence of the planned mitigation and monitoring measures.

If a marine mammal responds to a stimulus by changing its behavior (*e.g.,* through relatively minor changes in locomotion direction/speed or vocalization behavior), the response may or may not constitute taking at the individual level, and is unlikely to affect the stock or the species as a whole. However, if a sound source displaces marine mammals from an important feeding or breeding area for a prolonged period, impacts on animals or on the stock or species could potentially be significant (*e.g.,* Lusseau and Bejder, 2007; Weilgart, 2007). Given the many uncertainties in predicting the quantity and types of impacts of sound on marine mammals, it is common practice to estimate how many animals are likely to be present within a particular distance of a given activity, or exposed to a particular level of sound. In practice, depending on the amount of information available to characterize daily and seasonal movement and distribution of affected marine mammals, it can be difficult to distinguish between the number of individuals harassed and the instances of harassment and, when duration of the activity is considered, it can result in a take estimate that overestimates the number of individuals harassed. In particular, for stationary activities, it is more likely that some smaller number of individuals may accrue a number of incidences of harassment per individual than for each incidence to accrue to a new individual, especially if those individuals display some degree of residency or site fidelity and the impetus to use the site (*e.g.,* because of foraging opportunities) is stronger than the deterrence presented by the harassing activity.

The project area is not believed to be particularly important habitat for marine mammals, nor is it considered an area frequented by marine mammals (with the exception of California sea lions, which are attracted to nearby haul-out opportunities). Sightings of other species are relatively rare. Therefore, behavioral disturbances that could result from anthropogenic sound associated with these activities are expected to affect only a relatively small number of individual marine mammals, although those effects could be recurring over the life of the project if the same individuals remain in the project vicinity.

The Navy has requested authorization for the potential taking of small numbers of California sea lions, harbor seals, bottlenose dolphins, common dolphins, Pacific white-sided dolphins, Risso's dolphins, northern elephant seals, and gray whales in San Diego Bay and nearby waters that may result from pile driving during construction activities associated with the fuel pier replacement project described previously in this document. In order to estimate the potential incidents of take that may occur incidental to the specified activity, we typically first estimate the extent of the sound field that may be produced by the activity and then consider in combination with information about marine mammal density or abundance in the project area. In this case, we have acoustic data from project monitoring that provides empirical information regarding the sound fields likely produced by project activities. We first provide information on applicable sound thresholds for determining effects to marine mammals before describing the measured sound fields, the available marine mammal density or abundance information, and the method of estimating potential incidents of take.

Sound Thresholds

We use generic sound exposure thresholds to determine when an activity that produces sound might result in impacts to a marine mammal such that a take by harassment might occur. To date, no studies have been conducted that explicitly examine impacts to marine mammals from pile driving sounds or from which empirical sound thresholds have been established. These thresholds (Table 6) are used to estimate when harassment may occur (*i.e.,* when an animal is exposed to levels equal to or exceeding the relevant criterion) in specific contexts; however, useful contextual information that may inform our assessment of effects is typically lacking and we consider these thresholds as step functions. NMFS is working to revise these acoustic guidelines; for more information on that process, please visit *www.nmfs.noaa.gov/pr/acoustics/guidelines.htm.*

TABLE 6—CURRENT ACOUSTIC EXPOSURE CRITERIA

Criterion	Definition	Threshold
Level A harassment (underwater)	Injury (PTS—any level above that which is known to cause TTS).	180 dB (cetaceans)/190 dB (pinnipeds) (rms).
Level B harassment (underwater)	Behavioral disruption	160 dB (impulsive source)/120 dB (continuous source) (rms).
Level B harassment (airborne)	Behavioral disruption	90 dB (harbor seals)/100 dB (other pinnipeds) (unweighted).

Distance to Sound Thresholds

Background information on underwater sound propagation and the calculation of range to relevant thresholds was provided in our **Federal Register** notice of proposed authorization associated with the first-year IHA (78 FR 30873; May 23, 2013). For the first-year IHA, the Navy estimated sound fields using a site-specific model for transmission loss (TL) from pile driving at a central point at the project site in combination with proxy source levels (as described in the aforementioned **Federal Register** notice). The model is based on historical temperature-salinity data and location-dependent bathymetry. In the model, TL is the same for different sound source levels and is applied to each of the different activities to determine the point at which the applicable thresholds are reached as a function of distance from the source. The model's predictions result in a slightly lower average rate of TL than practical spreading, and hence are conservative. The model has been further validated using acoustic monitoring data collected under the first- and second-year IHAs (see Figure 6–1 of the Navy's application).

Impact and vibratory driving of steel pipe piles, impact driving of concrete and concrete-filled fiberglass piles, and demolition via pile cutting (and potentially vibratory removal) is planned for the next phase of work. Acoustic monitoring results that inform both the take estimates as well as the mitigation monitoring zones were reported in Table 4. We present the measured distances again here (Table 7) and compare to the modeled zones used in estimating potential incidents of take for the first year IHA. See also Figure

6–2 of the Navy's application for visual representation of these sound fields and their interaction with local topography. Assumed proxy source levels for the first-year IHA were 195 dB rms and 180 dB rms for impact and vibratory driving of steel piles, respectively. Measured source levels, used to produce the values labeled as ''measured'' below, were 196 dB rms and 165 dB rms for impact and vibratory driving, respectively. We conservatively use the vibratory pile installation value as proxy for vibratory pile removal, if it occurs. For vibratory driving, background sound has been determined to be approximately 128 dB rms. The distance at which continuous sound produced by vibratory driving would attenuate to background levels is approximately 3,000 m. Although Year 2 measurements indicate that such attenuation may occur closer to 2,500 m, we conservatively retain the larger distance for estimating exposures.

Because we have no new measurements for the two types of fender piles, we use the same proxy source values as were originally presented in the Navy's EA and first-year IHA application. There are no available values for 24 × 30-in square concrete piles, but there are measurements available for 24-in octagonal concrete piles (see Table 6–4 of the Navy's application). We use the largest such value (176 dB rms; Caltrans, 2012). There are also no available measurements for concrete-filled fiberglass piles, so we use a proxy value from driving of 16-in solid concrete piles (173 dB rms; Caltrans, 2012). The ZOI ranges for these piles are as presented in the original documents, and are therefore conservative in comparison with the revised TL curve shown in Figure 6–1 of the Navy's application.

The Navy measured several demolition activities during the Year 2 IHA (hydraulic pile cutting, diamond saw cutting) with results ranging from approximately 152–155 dB rms. Using these and the TL curve, the Navy estimates a ZOI range of approximately 1,500 m. However, based on empirical evidence from the prior two years of monitoring effort, the Navy states that attenuation to background levels for these activities may be closer to 1,000 m, making the assumed ZOI very conservative. Continued acoustic monitoring efforts should provide further data relating to these activities. For airborne sound, we assume a single, precautionary zone here that is based on measured values for impact driving of steel piles (approximately 107 dB [unweighted]).

TABLE 7—PREDICTED VERSUS MEASURED DISTANCES TO RELEVANT THRESHOLDS

Activity	Distance to threshold in meters					
	190 dB	180 dB	160 dB	120 dB	100 dB	90 dB
Impact driving, steel piles (predicted)	36	452	5,484	n/a	113	358
Impact driving, steel piles (measured) [1]	[2] 75	[2] 350	2,000	n/a	78	182
Vibratory driving, steel piles (predicted)	<10	14	n/a	6,470	9	28
Vibratory driving, steel piles (measured)	<10	<10	n/a	3,000	.....	.....
Impact driving, 24x30 concrete piles	<10	<10	505	n/a	.....	.....
Impact driving, 16-in concrete-filled fiberglass piles	<10	<10	259	n/a	.....	.....
Pile cutting (demolition)	<10	<10	n/a	1,500	.....	.....

[1] Note that, for underwater zones, these values are based on data for bayside piles and will be precautionary for shoreside piles. See discussion at Table 4.

[2] The buffered zones for use in mitigation will be 150 m and 450 m, respectively. The minimum zone for other activities listed here will be 20 m.

Airborne Sound

Although sea lions are known to haul-out regularly on man-made objects in the vicinity of the project site (see Figure 4–1 of the Navy's application), the majority of such fixed areas are not within the ZOIs for airborne sound. The zones for sea lions are within the minimum shutdown zone defined for underwater sound. Accordingly, we previously stated that incidents of incidental take resulting solely from airborne sound are unlikely. However, due to the additional surfaces available for California sea lions to haul out on during construction activity, twelve individuals were unexpectedly observed during Year 2 monitoring as hauled out within the airborne ZOI and did not subsequently enter the water during pile driving. Therefore, these animals were considered taken by airborne noise and we consider that this could occur again during Year 3 construction activity. There is a possibility that an animal could surface in-water, but with head out, within one of the defined zones and thereby be exposed to levels of airborne sound that we associate with harassment, but any such occurrence would likely be accounted for in our estimation of incidental take from underwater sound.

Marine Mammal Densities

For all species, the best scientific information available was considered for use in the marine mammal take assessment calculations. Although various regional offshore surveys for marine mammals have been conducted, it is unlikely that these data would be representative of the species or numbers that may be encountered in San Diego Bay. However, the Navy has conducted a large number of site-specific marine mammal surveys, from 2007–14 (Merkel and Associates, 2008; Johnson, 2010, 2011; Lerma, 2012, 2014). Boat survey transects established within northern San Diego Bay in 2007 have been resurveyed on 46 occasions, 35 of which were conducted between September and April. Whereas analyses for the first-year IHA relied on surveys conducted from 2007–12, continuing surveys by the Navy have generally indicated increasing abundance of all species and the second-year IHA relied on 2012–14 survey data. Year 2 project monitoring showed even greater abundance of certain species, and we consider all of these data in order to provide the most up-to-date estimates for marine mammal abundances during the period of this proposed IHA. These data are from dedicated line-transect surveys, required project marine mammal monitoring, or from opportunistic observations for more rarely observed species (see Figures 3–1 through 3–5 of the Navy's application).

In addition, the Navy has developed estimates of marine mammal densities in waters associated with training and testing areas (including Hawaii-Southern California) for the Navy Marine Species Density Database

(NMSDD). A technical report (Hanser *et al.,* 2015) describes methodologies and available information used to derive these densities, which are based upon the best available information, except where specific local abundance information is available and applicable to a specific action area. Density information is shown in Table 9; the document is publicly available on the Internet at: *nwtteis.com/DocumentsandReferences/NWTTDocuments/SupportingTechnicalDocuments.aspx* (accessed August 24, 2015).

Description of Take Calculation

The following assumptions are made when estimating potential incidences of take:

- All marine mammal individuals potentially available are assumed to be present within the relevant area, and thus incidentally taken;
- An individual can only be taken once during a 24-h period;
- The assumed ZOIs and days of activity are as shown in Table 8; and,
- Exposures to sound levels at or above the relevant thresholds equate to take, as defined by the MMPA.

The estimation of marine mammal takes typically uses the following calculation:

Exposure estimate = (n * ZOI) * days of total activity

Where:

n = density estimate used for each species/season

ZOI = sound threshold ZOI area; the area encompassed by all locations where the SPLs equal or exceed the threshold being evaluated

n * ZOI produces an estimate of the abundance of animals that could be present in the area for exposure, and is rounded to the nearest whole number before multiplying by days of total activity.

The ZOI impact area is estimated using the relevant distances in Table 7, assuming that sound radiates from a central point in the water column slightly offshore of the existing pier and taking into consideration the possible affected area due to topographical constraints of the action area (*i.e.,* radial distances to thresholds are not always reached). When local abundance is the best available information, in lieu of the density-area method described above, we may simply multiply some number of animals (as determined through counts of animals hauled-out) by the number of days of activity, under the assumption that all of those animals will be present and incidentally taken on each day of activity.

Activity	Number of days	ZOI (km^2)
Impact and vibratory driving, 30-in steel piles [1]	6	5.6572
Vibratory removal	6	5.6572
Impact driving, 24x32-in concrete piles	22	0.1914
Impact driving, 16-in concrete-filled fiberglass piles	33	0.0834
Hydraulic pile cutting/diamond saw cutting	48	3.0786

[1] We assume that impact driving of 30-in steel piles would always occur on the same day as vibratory driving of the same piles. Therefore, the impact driving ZOI (3.8894 km^2) would always be subsumed by the vibratory driving ZOI.

Where appropriate, we use average daily number of individuals observed within the project area during Navy marine mammal surveys converted to a density value by using the largest ZOI as the effective observation area. It is the opinion of the professional biologists who conducted these surveys that detectability of animals during these surveys, at slow speeds and under calm weather and excellent viewing conditions, approached one hundred percent.

There are a number of reasons why estimates of potential incidents of take may be conservative, assuming that available density or abundance estimates and estimated ZOI areas are accurate (aside from the contingency correction discussed above). We assume, in the absence of information supporting a more refined conclusion, that the output of the calculation represents the number of individuals that may be taken by the specified activity. In fact, in the context of stationary activities such as pile driving and in areas where resident animals may be present, this number more realistically represents the number of incidents of take that may accrue to a smaller number of individuals. While pile driving can occur any day throughout the period of validity, and the analysis is conducted on a per day basis, only a fraction of that time (typically a matter of hours on any given day) is actually spent pile driving. The potential effectiveness of mitigation measures in reducing the number of takes is typically not quantified in the take estimation process. For these reasons, these take estimates may be conservative. See Table 9 for total estimated incidents of take.

California Sea Lion

The NMSDD reports estimated densities for north and central San Diego Bay of 5.8 animals/km^2 for the summer and fall periods and 2.5 animals/km^2 during the winter and spring (based on surveys conducted 2007–11; note that the NMSDD does not present density estimates specific to San Diego Bay for other species). For the first-year IHA, the Navy reported an average abundance of approximately sixty individuals per survey day (approximately equating to the reported density). However, Year 2 project monitoring showed an average of 90.35 individuals per day occurring within the project area (*i.e.,* 5.6752 km^2). This includes both hauled-out and swimming individuals. For California sea lions, the most common species in northern San Diego Bay and the only species with regular occurrence in the project area, we determined that this value—derived from the most recent monitoring effort—would be appropriate for use in estimating potential incidents of take. As noted previously, we also account separately for the potential that California sea lions may experience Level B harassment solely as a result of airborne noise. There is no firm quantitative basis on which to base an estimate of potential occurrences of harassment by airborne noise, as use of the aforementioned density estimate would not be appropriate, California sea lion use of opportunistic haul-outs within the airborne ZOI is not predictable, and the potential reaction of hauled animals to airborne noise (*i.e.,* whether hauled sea lions enter the water during construction activity and are subsequently exposed to underwater noise or remain hauled for the duration) is also not predictable. Therefore, we assume and propose to authorize the take of ten individual California sea lions solely by airborne noise.

Harbor Seal

Harbor seals are relatively uncommon within San Diego Bay. Previously,

sightings in the Navy transect surveys of northern San Diego Bay were limited to individuals outside of the ZOI, on the south side of Ballast Point. These individuals had not been observed entering or transiting the project area and were believed to move from this location to haul-outs further north at La Jolla. Separately, marine mammal monitoring conducted by the Navy intermittently from 2010–14 had documented up to four harbor seals near Pier 122 (within the ZOI) at various times, with the greatest number of sightings during April and May. This information was used in the previous IHA analysis, wherein we assumed that three harbor seals could be present for up to thirty days of the project. However, Year 2 project monitoring indicates an average abundance of 2.83 individuals per day in the project area. Animals were seen swimming as well as hauled out on rocks along the shoreline of NBPL. Although it is unknown whether this increase in abundance is a temporary phenomenon we use this new information on a precautionary basis as the best available information, and assume that this number of animals could be present on any day of the project. The NMSDD provides a maximum density estimate of 0.02 animals/km^2 for southern California, but site-specific information indicates that harbor seals are more common within the northern San Diego Bay project area than this density would suggest.

Gray Whale

The NMSDD provides a density of 0.115 animals/km^2 for southern California waters from shore to 5 nm west of the Channel Islands (winter/spring only; density assumed to be zero during summer/fall), a value initially reported by Carretta *et al.* (2000) for gray whales around San Clemente Island in the Southern California Bight. Gray whales were seen only from January-April. In the project area, observational data for gray whales is limited and their occurrence considered infrequent and unpredictable. On the basis of limited information—in recent years, solitary individuals have entered the bay and remained for varying lengths of time in 2009, 2010, 2011, and 2014, and whales more regularly transit briefly past the mouth of San Diego Bay—we assume here that the NMSDD density is applicable, while acknowledging that it likely represents a precautionary estimate for waters within the Bay as opposed to those outside the mouth of the bay that whales are more likely to transit through. Incidental harassment of gray whales could result from some combination of individuals briefly transiting near the mouth of the bay and from individuals entering the bay and lingering in the project area.

Bottlenose Dolphin

Coastal bottlenose dolphins can occur at any time of year in San Diego Bay. Numbers sighted during Navy transect surveys have been highly variable, ranging from zero to forty individuals (observed dolphins are assumed to have been of the coastal stock). An uncorrected average of 2.1 bottlenose dolphins was observed during recent Navy surveys (September 2012 through April 2014), although nineteen animals were observed in a single survey. As reported in the NMSDD, Dudzik *et al.* (2006) provide a uniform density for California coastal dolphins of 0.4 animals/km^2 within 1 km of the coast from Baja to San Francisco in all four seasons. However, given the high variability observed in terms of numbers and locations of bottlenose dolphin sightings, we believe it appropriate to take a precautionary approach to take estimation use Year 2 sightings (7.09 individuals per day) as the basis for a density value.

Common Dolphin

Common dolphins are present in the coastal waters outside of San Diego Bay, but have typically been observed in the bay only infrequently and were never seen during the Navy's surveys. However, the previously described observations of common dolphins in the project area during in 2014 prompted their inclusion in the second IHA, a decision supported by increased observations of common dolphins during Year 2. There have not been enough sightings of common dolphins in San Diego Bay to develop a reliable estimate specific to the project area. Sightings of long-beaked common dolphins are predominantly near shore, and have been documented during Navy training exercises just offshore and to the south of San Diego Bay, whereas those of short-beaked common dolphins extend throughout the coastal and offshore waters. The NMSDD provides an all-season density estimate of 0.1 animals/km^2 for the long-beaked common dolphin within southern California waters (derived from Ferguson and Barlow [2003] and Barlow and Forney [2007]). However, given the large numbers of dolphins and increasing observations during 2014–15, we use the sighting rate of 8.67 dolphins per day as the basis for a density value. Although short-beaked common dolphins are less common in nearshore waters than are long-beaked, and are expected to be less likely to occur in the project area, we assign a single value to all common dolphins that may occur in the project area. Any incidents of take could be of either long-beaked or short-beaked common dolphins.

Pacific White-sided Dolphin

Pacific white-sided dolphins are not known from the project area, but were observed in the bay on several occasions during Year 2 monitoring (0.28 individuals per day). This information produces a density estimate slightly lower than that found in Hanser *et al.* (2015), and is the only information available for use in estimating potential exposures. However, this density value produces a zero estimate for all scenarios. Based on 2014–15 observations in the project area, this likely underrepresents the potential occurrence of Pacific white-sided dolphins. Therefore, we assume that one group of dolphins may occur in the relevant ZOI for each activity with a large Level B ZOI (*i.e.,* vibratory pile driving, vibratory pile removal, and hydraulic pile cutting/diamond saw cutting). For each of these presumed occurrences, we assume that it could be of the largest group size observed by the Navy during 2014–15 project monitoring (*i.e.,* seven).

Risso's Dolphin

Although no Risso's dolphins have not been observed in the project area, they are one of the more common species known from deeper waters nearby. Therefore, we use the regional density estimate from Hanser *et al.* (2015) in estimating potential exposures.

Northern Elephant Seal

Only one elephant seal has been observed in the project area, but given the increasing regional abundances for this species, we believe it reasonable to propose take authorization, and the regional density estimate found in Hanser *et al.* (2015) is used here. However, as for Pacific white-sided dolphins, use of this density would produce a zero exposure estimate for all scenarios, which likely underestimates potential occurrence of this specie sin the project area. Therefore, we assume that one elephant seal may occur in the relevant ZOI for each of the three activity scenarios described above for Pacific white-sided dolphin. It is unlikely that elephant seals would haul out on any structures within the airborne ZOIs, and we do not consider harassment via airborne noise as a possibility for this species.

TABLE 9—CALCULATIONS FOR INCIDENTAL TAKE ESTIMATION

Species	Density	Impact driving, steel [1]	Vibratory driving, steel	Impact driving, concrete	Impact driving, concrete/ fiberglass	Vibratory removal	Pile cutting	Airborne	Total proposed authorized takes (% of total stock)
California sea lion	15.9201	372	540	22	33	540	2,352	10	3,497 (1.2)
Harbor seal	0.4987	12	18	0	0	18	96	0	132 (0.4)
Bottlenose dolphin	1.2493	30	42	0	0	42	192	n/a	276 (55.2) [2]
Common dolphin	1.5277	36	54	0	0	54	240	n/a	348 (0.3 [LB]/0.1 [SB]) [3]
Gray whale	0.115	0	6	0	0	6	0	n/a	12 (0.1)
Northern elephant seal [4]	0.0508	1	1	0	0	1	1	0	3 (0.002)
Pacific white-sided dolphin [5]	0.0493	1	1	0	0	1	1	n/a	21 (0.04)
Risso's dolphin	0.2029	6	6	0	0	6	48	n/a	60 (1.0)

[1] We assume that impact driving of steel piles would occur on the same day as vibratory driving of the same piles. Therefore, these estimates are provided for reference only and are not included in the proposed total take authorization.
[2] Total stock assumed to be 500 for purposes of calculation. See Table 3.
[3] LB = long-beaked; SB = short-beaked.
[4] Although the density calculation gives a result of zero for all scenarios, we assume one occurrence of one northern elephant seal will occur in the relevant ZOI for each indicated activity.
[5] Although the density calculation gives a result of zero for all scenarios, we assume one occurrence of a group of Pacific white-sided dolphins will occur in the relevant ZOI for each indicated activity, with a group size of seven.

Analyses and Preliminary Determinations

Negligible Impact Analysis

NMFS has defined ''negligible impact'' in 50 CFR 216.103 as ''. . . an impact resulting from the specified activity that cannot be reasonably expected to, and is not reasonably likely to, adversely affect the species or stock through effects on annual rates of recruitment or survival.'' A negligible impact finding is based on the lack of likely adverse effects on annual rates of recruitment or survival (*i.e.,* population-level effects). An estimate of the number of Level B harassment takes alone is not enough information on which to base an impact determination. In addition to considering estimates of the number of marine mammals that might be ''taken'' through behavioral harassment, we consider other factors, such as the likely nature of any responses (*e.g.,* intensity, duration), the context of any responses (*e.g.,* critical reproductive time or location, migration), as well as the number and nature of estimated Level A harassment takes, the number of estimated mortalities, and effects on habitat.

Pile driving activities associated with the pier replacement project, as outlined previously, have the potential to disturb or displace marine mammals. Specifically, the specified activities may result in take, in the form of Level B harassment (behavioral disturbance) only, from underwater sounds generated from pile driving. Potential takes could occur if individuals of these species are present in the ensonified zone when pile driving is happening.

No injury, serious injury, or mortality is anticipated given the nature of the activity and measures designed to minimize the possibility of injury to marine mammals. The potential for these outcomes is minimized through the construction method and the implementation of the planned mitigation measures. For example, use of vibratory hammers does not have significant potential to cause injury to marine mammals due to the relatively low source levels produced (site-specific acoustic monitoring data show no source level measurements above 180 dB rms) and the lack of potentially injurious source characteristics. Impact pile driving produces short, sharp pulses with higher peak levels and much sharper rise time to reach those peaks. When impact driving is necessary, required measures (implementation of buffered shutdown zones) significantly reduce any possibility of injury. Given sufficient ''notice'' through use of soft start (for impact driving), marine mammals are expected to move away from a sound source that is annoying prior to its becoming potentially injurious. The likelihood that marine mammal detection ability by trained observers is high under the environmental conditions described for San Diego Bay (approaching one hundred percent detection rate, as described by trained biologists conducting site-specific surveys) further enables the implementation of shutdowns to avoid injury, serious injury, or mortality.

Effects on individuals that are taken by Level B harassment, on the basis of reports in the literature as well as monitoring from past years of this project and other similar activities, will likely be limited to reactions such as increased swimming speeds, increased surfacing time, or decreased foraging (if such activity were occurring) (*e.g.,* Thorson and Reyff, 2006; HDR, 2012; Lerma, 2014). Most likely, individuals will simply move away from the sound source and be temporarily displaced from the areas of pile driving, although even this reaction has been observed primarily only in association with impact pile driving. In response to vibratory driving, pinnipeds (which may become somewhat habituated to human activity in industrial or urban waterways) have been observed to orient towards and sometimes move towards the sound. The pile driving activities analyzed here are similar to, or less impactful than, numerous other construction activities conducted in San Francisco Bay and in the Puget Sound region, which have taken place with no reported injuries or mortality to marine mammals, and no known long-term adverse consequences from behavioral harassment. Repeated exposures of individuals to levels of sound that may cause Level B harassment are unlikely to result in hearing impairment or to significantly disrupt foraging behavior. Thus, even repeated Level B harassment of some small subset of the overall stock is unlikely to result in any significant realized decrease in fitness for the affected individuals, and thus would not result in any adverse impact to the stock as a whole. Level B harassment will be reduced to the level of least practicable impact through use of mitigation measures described herein and, if sound produced by project activities is sufficiently disturbing, animals are likely to simply avoid the project area while the activity is occurring.

In summary, this negligible impact analysis is founded on the following factors: (1) The possibility of injury, serious injury, or mortality may reasonably be considered discountable; (2) the anticipated incidents of Level B harassment consist of, at worst, temporary modifications in behavior; (3) the absence of any significant habitat within the project area, including

rookeries, significant haul-outs, or known areas or features of special significance for foraging or reproduction; (4) the presumed efficacy of the proposed mitigation measures in reducing the effects of the specified activity to the level of least practicable impact. In addition, these stocks are not listed under the ESA or considered depleted under the MMPA. In combination, we believe that these factors, as well as the available body of evidence from other similar activities, demonstrate that the potential effects of the specified activity will have only short-term effects on individuals. The specified activity is not expected to impact rates of recruitment or survival and will therefore not result in population-level impacts. Based on the analysis contained herein of the likely effects of the specified activity on marine mammals and their habitat, and taking into consideration the implementation of the proposed monitoring and mitigation measures, we preliminarily find that the total marine mammal take from Navy's pier replacement activities will have a negligible impact on the affected marine mammal species or stocks.

Small Numbers Analysis

The number of incidents of take proposed for authorization for these stocks, with the exception of the coastal bottlenose dolphin (see below), would be considered small relative to the relevant stocks or populations (see Table 9) even if each estimated taking occurred to a new individual. This is an extremely unlikely scenario as, for pinnipeds occurring at the NBPL waterfront, there will almost certainly be some overlap in individuals present day-to-day and in general, there is likely to be some overlap in individuals present day-to-day for animals in estuarine/inland waters.

The proposed numbers of authorized take for bottlenose dolphins are higher relative to the total stock abundance estimate and would not represent small numbers if a significant portion of the take was for a new individual. However, these numbers represent the estimated incidents of take, not the number of individuals taken. That is, it is likely that a relatively small subset of California coastal bottlenose dolphins would be incidentally harassed by project activities. California coastal bottlenose dolphins range from San Francisco Bay to San Diego (and south into Mexico) and the specified activity would be stationary within an enclosed water body that is not recognized as an area of any special significance for coastal bottlenose dolphins (and is therefore not an area of dolphin aggregation, as evident in Navy observational records). We therefore believe that the estimated numbers of takes, were they to occur, likely represent repeated exposures of a much smaller number of bottlenose dolphins and that, based on the limited region of exposure in comparison with the known distribution of the coastal bottlenose dolphin, these estimated incidents of take represent small numbers of bottlenose dolphins.

Based on the analysis contained herein of the likely effects of the specified activity on marine mammals and their habitat, and taking into consideration the implementation of the mitigation and monitoring measures, we preliminarily find that small numbers of marine mammals will be taken relative to the populations of the affected species or stocks.

Impact on Availability of Affected Species for Taking for Subsistence Uses

There are no relevant subsistence uses of marine mammals implicated by this action. Therefore, we have determined that the total taking of affected species or stocks would not have an unmitigable adverse impact on the availability of such species or stocks for taking for subsistence purposes.

Endangered Species Act (ESA)

The Navy initiated informal consultation under section 7 of the ESA with NMFS Southwest Regional Office (now West Coast Regional Office) on March 5, 2013. NMFS concluded on May 16, 2013, that the proposed action may affect, but is not likely to adversely affect, WNP gray whales. The Navy has not requested authorization of the incidental take of WNP gray whales and no such authorization is proposed, and there are no other ESA-listed marine mammals found in the action area. Therefore, no consultation under the ESA is required.

National Environmental Policy Act (NEPA)

In compliance with the National Environmental Policy Act of 1969 (42 U.S.C. 4321 *et seq.*), as implemented by the regulations published by the Council on Environmental Quality (40 CFR parts 1500–1508), the Navy prepared an Environmental Assessment (EA) to consider the direct, indirect and cumulative effects to the human environment resulting from the pier replacement project. NMFS made the Navy's EA available to the public for review and comment, in relation to its suitability for adoption by NMFS in order to assess the impacts to the human environment of issuance of an IHA to the Navy. Also in compliance with NEPA and the CEQ regulations, as well as NOAA Administrative Order 216–6, NMFS has reviewed the Navy's EA, determined it to be sufficient, and adopted that EA and signed a Finding of No Significant Impact (FONSI) on July 8, 2013.

We have reviewed the Navy's application for a renewed IHA for ongoing construction activities for 2015–16 and the 2014–15 monitoring report. Based on that review, we have determined that the proposed action is very similar to that considered in the previous IHAs. In addition, no significant new circumstances or information relevant to environmental concerns have been identified. Thus, we have determined preliminarily that the preparation of a new or supplemental NEPA document is not necessary, and will, after review of public comments determine whether or not to reaffirm our 2013 FONSI. The 2013 NEPA documents are available for review at *www.nmfs.noaa.gov/pr/permits/incidental/construction.htm.*

Proposed Authorization

As a result of these preliminary determinations, we propose to issue an IHA to the Navy for conducting the described pier replacement activities in San Diego Bay, for a period of one year from the date of issuance, provided the previously mentioned mitigation, monitoring, and reporting requirements are incorporated. The proposed IHA language is provided next.

This section contains a draft of the IHA itself. The wording contained in this section is proposed for inclusion in the IHA (if issued).

1. This Incidental Harassment Authorization (IHA) is valid for a period of one year from the date of issuance.

2. This IHA is valid only for pile driving and removal activities associated with the fuel pier replacement project in San Diego Bay, California.

3. General Conditions

(a) A copy of this IHA must be in the possession of the Navy, its designees, and work crew personnel operating under the authority of this IHA.

(b) The species authorized for taking are the harbor seal (*Phoca vitulina richardii*), California sea lion (*Zalophus californianus*), bottlenose dolphin (*Tursiops truncatus truncatus*), common dolphin (*Delphinus sp.*), northern elephant seal (*Mirounga angustirostris*), Pacific white-sided dolphin (*Lagenorhynchus obliquidens*), Risso's dolphin (*Grampus griseus*), and gray whale (*Eschrichtius robustus*).

(c) The taking, by Level B harassment only, is limited to the species listed in condition 3(b). See Table 1 for numbers of take authorized.

TABLE 1—AUTHORIZED TAKE NUMBERS, BY SPECIES

Species	Authorized take
Harbor seal	137
California sea lion	3,519
Northern elephant seal	3
California coastal bottlenose dolphin	276
Pacific white-sided dolphin	12
Risso's dolphin	60
Common dolphin	348
Gray whale	12

(d) The taking by injury (Level A harassment), serious injury, or death of any of the species listed in condition 3(b) of the Authorization or any taking of any other species of marine mammal is prohibited and may result in the modification, suspension, or revocation of this IHA.

(e) The Navy shall conduct briefings between construction supervisors and crews, marine mammal monitoring team, acoustic monitoring team, and Navy staff prior to the start of all pile driving activity, and when new personnel join the work, in order to explain responsibilities, communication procedures, marine mammal monitoring protocol, and operational procedures.

(f) The Navy may conduct a maximum of 115 days of in-water impact and vibratory pile driving and demolition (to include vibratory pile removal, hydraulic pile cutting, and/or diamond saw cutting).

4. Mitigation Measures

The holder of this Authorization is required to implement the following mitigation measures:

(a) For all pile driving, the Navy shall implement a minimum shutdown zone of 20 m radius around the pile. If a marine mammal comes within or approaches the shutdown zone, such operations shall cease. See Table 2 for minimum radial distances required for shutdown zones.

TABLE 2—MINIMUM RADIAL DISTANCE TO SHUTDOWN AND DISTURBANCE ZONES

Activity	Distance to threshold in meters			
	190 dB	180 dB	160 dB	120 dB
Impact driving, steel piles	150	450	2,000	n/a
Vibratory driving/removal, steel piles	20	20	n/a	3,000
Impact driving, concrete piles	20	20	505	n/a
Impact driving, concrete/fiberglass piles	20	20	259	n/a
Hydraulic cutting/diamond saw cutting	20	20	n/a	1,500

(b) The Navy shall shutdown activity as appropriate upon observation of any species for which take is not authorized. Activity shall not be resumed until those species have been observed to leave the relevant zone or until one hour has elapsed.

(c) The Navy shall establish monitoring locations as described below. Please also refer to the Acoustic and Marine Species Monitoring Plan (Monitoring Plan; attached).

i. For all pile driving and applicable demolition activities, a minimum of one observer shall be stationed at the active pile driving rig in order to monitor the shutdown zones.

ii. For pile driving of 30-in steel piles, at least five additional observers shall be positioned for optimal monitoring of the surrounding waters. During impact driving of steel piles, one of these shall be stationed for optimal monitoring of the cetacean Level A injury zone (see Table 2), while others may be positioned at the discretion of the Navy for optimal fulfillment of both acoustic monitoring objectives and monitoring of the Level B harassment zone. During all other pile driving, at least one additional observer shall be deployed and may be positioned at the discretion of the Navy for optimal fulfillment of both acoustic monitoring objectives and monitoring of the Level B harassment zone.

iii. These observers shall record all observations of marine mammals, regardless of distance from the pile being driven, as well as behavior and potential behavioral reactions of the animals. Photographs must be taken of any observed gray whales.

iv. All observers shall be equipped for communication of marine mammal observations amongst themselves and to other relevant personnel (*e.g.,* those necessary to effect activity delay or shutdown).

(d) Monitoring shall take place from fifteen minutes prior to initiation of pile driving activity through thirty minutes post-completion of pile driving activity. Pre-activity monitoring shall be conducted for fifteen minutes to ensure that the shutdown zone is clear of marine mammals, and pile driving may commence when observers have declared the shutdown zone clear of marine mammals. In the event of a delay or shutdown of activity resulting from marine mammals in the shutdown zone, animals shall be allowed to remain in the shutdown zone (*i.e.,* must leave of their own volition) and their behavior shall be monitored and documented. Monitoring shall occur throughout the time required to drive a pile. The shutdown zone must be determined to be clear during periods of good visibility (*i.e.,* the entire shutdown zone and surrounding waters must be visible to the naked eye).

(e) If a marine mammal approaches or enters the shutdown zone, all pile driving activities at that location shall be halted. If pile driving is halted or delayed due to the presence of a marine mammal, the activity may not commence or resume until either the animal has voluntarily left and been visually confirmed beyond the shutdown zone or fifteen minutes have passed without re-detection of the animal.

(f) Monitoring shall be conducted by qualified observers, as described in the Monitoring Plan. Trained observers shall be placed from the best vantage point(s) practicable to monitor for marine mammals and implement shutdown or delay procedures when applicable through communication with the equipment operator.

(g) The Navy shall use soft start techniques recommended by NMFS for vibratory and impact pile driving. Soft start for vibratory drivers requires contractors to initiate sound for fifteen seconds at reduced energy followed by a thirty-second waiting period. This procedure is repeated two additional times. Soft start for impact drivers requires contractors to provide an initial set of strikes at reduced energy, followed by a thirty-second waiting period, then two subsequent reduced

energy strike sets. Soft start shall be implemented at the start of each day's pile driving and at any time following cessation of pile driving for a period of thirty minutes or longer. Soft start for impact drivers must be implemented at any time following cessation of impact driving for a period of thirty minutes or longer.

(h) Pile driving shall only be conducted during daylight hours.

5. Monitoring

The holder of this Authorization is required to conduct marine mammal monitoring during pile driving activity. Marine mammal monitoring and reporting shall be conducted in accordance with the Monitoring Plan.

(a) The Navy shall collect sighting data and behavioral responses to pile driving for marine mammal species observed in the region of activity during the period of activity. All observers shall be trained in marine mammal identification and behaviors, and shall have no other construction-related tasks while conducting monitoring.

(b) For all marine mammal monitoring, the information shall be recorded as described in the Monitoring Plan.

(c) The Navy shall conduct acoustic monitoring for representative scenarios of pile driving activity, as described in the Monitoring Plan.

6. Reporting

The holder of this Authorization is required to:

(a) Submit a draft report on all monitoring conducted under the IHA within 45 calendar days of the completion of marine mammal and acoustic monitoring, or sixty days prior to the issuance of any subsequent IHA for this project, whichever comes first. A final report shall be prepared and submitted within thirty days following resolution of comments on the draft report from NMFS. This report must contain the informational elements described in the Monitoring Plan, at minimum (see attached), and shall also include:

i. Detailed information about any implementation of shutdowns, including the distance of animals to the pile and description of specific actions that ensued and resulting behavior of the animal, if any.

ii. Description of attempts to distinguish between the number of individual animals taken and the number of incidences of take, such as ability to track groups or individuals.

iii. Results of acoustic monitoring, including the information described in in the Monitoring Plan.

(b) Reporting injured or dead marine mammals:

i. In the unanticipated event that the specified activity clearly causes the take of a marine mammal in a manner prohibited by this IHA, such as an injury (Level A harassment), serious injury, or mortality, Navy shall immediately cease the specified activities and report the incident to the Office of Protected Resources (301–427–8425), NMFS, and the West Coast Regional Stranding Coordinator (206–526–6550), NMFS. The report must include the following information:

A. Time and date of the incident;

B. Description of the incident;

C. Environmental conditions (*e.g.,* wind speed and direction, Beaufort sea state, cloud cover, and visibility);

D. Description of all marine mammal observations in the 24 hours preceding the incident;

E. Species identification or description of the animal(s) involved;

F. Fate of the animal(s); and

G. Photographs or video footage of the animal(s).

Activities shall not resume until NMFS is able to review the circumstances of the prohibited take. NMFS will work with Navy to determine what measures are necessary to minimize the likelihood of further prohibited take and ensure MMPA compliance. Navy may not resume their activities until notified by NMFS.

i. In the event that Navy discovers an injured or dead marine mammal, and the lead observer determines that the cause of the injury or death is unknown and the death is relatively recent (*e.g.,* in less than a moderate state of decomposition), Navy shall immediately report the incident to the Office of Protected Resources, NMFS, and the West Coast Regional Stranding Coordinator, NMFS.

The report must include the same information identified in 6(b)(i) of this IHA. Activities may continue while NMFS reviews the circumstances of the incident. NMFS will work with Navy to determine whether additional mitigation measures or modifications to the activities are appropriate.

ii. In the event that Navy discovers an injured or dead marine mammal, and the lead observer determines that the injury or death is not associated with or related to the activities authorized in the IHA (*e.g.,* previously wounded animal, carcass with moderate to advanced decomposition, scavenger damage), Navy shall report the incident to the Office of Protected Resources, NMFS, and the West Coast Regional Stranding Coordinator, NMFS, within 24 hours of the discovery. Navy shall provide photographs or video footage or other documentation of the stranded animal sighting to NMFS.

7. This Authorization may be modified, suspended or withdrawn if the holder fails to abide by the conditions prescribed herein, or if the authorized taking is having more than a negligible impact on the species or stock of affected marine mammals.

Request for Public Comments

We request comment on our analysis, the draft authorization, and any other aspect of this Notice of Proposed IHA for Navy's pier replacement activities. Please include with your comments any supporting data or literature citations to help inform our final decision on Navy's request for an MMPA authorization.

Dated: August 27, 2015.

Donna S. Wieting,

Director, Office of Protected Resources, National Marine Fisheries Service.

[FR Doc. 2015–21647 Filed 9–1–15; 8:45 am]

BILLING CODE 3510–22–P

COMMISSION OF FINE ARTS

Notice of Meeting

The next meeting of the U.S. Commission of Fine Arts is scheduled for 17 September 2015, at 9:00 a.m. in the Commission offices at the National Building Museum, Suite 312, Judiciary Square, 401 F Street NW., Washington, DC 20001–2728. Items of discussion may include buildings, parks and memorials.

Draft agendas and additional information regarding the Commission are available on our Web site: *www.cfa.gov.* Inquiries regarding the agenda and requests to submit written or oral statements should be addressed to Thomas Luebke, Secretary, U.S. Commission of Fine Arts, at the above address; by emailing *cfastaff@cfa.gov;* or by calling 202–504–2200. Individuals requiring sign language interpretation for the hearing impaired should contact the Secretary at least 10 days before the meeting date.

Dated: August 25, 2015, in Washington, DC.

Thomas Luebke,

Secretary.

[FR Doc. 2015–21548 Filed 9–1–15; 8:45 am]

BILLING CODE M

COMMITTEE FOR PURCHASE FROM PEOPLE WHO ARE BLIND OR SEVERELY DISABLED

Procurement List; Addition and Deletions

AGENCY: Committee for Purchase From People Who Are Blind or Severely Disabled.

ACTION: Addition to and deletions from the Procurement List.

SUMMARY: This action adds a service to the Procurement List that will be provided by the nonprofit agency employing persons who are blind or have other severe disabilities, and deletes products from the Procurement List previously furnished by such agencies.

DATES: *Effective Date:* 09/29/2015.

ADDRESSES: Committee for Purchase From People Who Are Blind or Severely Disabled, 1401 S. Clark Street, Suite 715, Arlington, Virginia 22202–4149.

FOR FURTHER INFORMATION CONTACT: Barry S. Lineback, Telephone: (703) 603–7740, Fax: (703) 603–0655, or email *CMTEFedReg@AbilityOne.gov.*

SUPPLEMENTARY INFORMATION:

Addition

On 7/10/2015 (80 FR 39759–39760), the Committee for Purchase From People Who Are Blind or Severely Disabled published notice of proposed addition to the Procurement List.

After consideration of the material presented to it concerning capability of qualified nonprofit agencies to provide the service and impact of the addition on the current or most recent contractors, the Committee has determined that the service listed below is suitable for procurement by the Federal Government under 41 U.S.C. 8501–8506 and 41 CFR 51–2.4.

Regulatory Flexibility Act Certification

I certify that the following action will not have a significant impact on a substantial number of small entities. The major factors considered for this certification were:

1. The action will not result in any additional reporting, recordkeeping or other compliance requirements for small entities other than the small organization that will provide the service to the Government.

2. The action will result in authorizing a small entity to provide the service to the Government.

3. There are no known regulatory alternatives which would accomplish the objectives of the Javits-Wagner-O'Day Act (41 U.S.C. 8501–8506) in connection with the service proposed for addition to the Procurement List.

End of Certification

Accordingly, the following service is added to the Procurement List:

Service

Service Type: Equipment and Facility Support Service.
Service is Mandatory for: US Air Force, Ogden Air Logistics Complex, 6038 Aspen Avenue, Hill AFB, UT.
Mandatory Source of Supply: Beacon Group SW., Inc., Tucson, AZ.
Contracting Activity: Dept of the Air Force, FA8224 OL HPZI PZIM Hill AFB, UT.

Deletions

On 7/17/2015 (80 FR 42481–42483) and 7/24/2015 (80 FR 44078), the Committee for Purchase From People Who Are Blind or Severely Disabled published notices of proposed deletions from the Procurement List.

After consideration of the relevant matter presented, the Committee has determined that the products listed below are no longer suitable for procurement by the Federal Government under 41 U.S.C. 8501–8506 and 41 CFR 51–2.4.

Regulatory Flexibility Act Certification

I certify that the following action will not have a significant impact on a substantial number of small entities. The major factors considered for this certification were:

1. The action will not result in additional reporting, recordkeeping or other compliance requirements for small entities.

2. The action may result in authorizing small entities to furnish the products to the Government.

3. There are no known regulatory alternatives which would accomplish the objectives of the Javits-Wagner-O'Day Act (41 U.S.C. 8501–8506) in connection with the products deleted from the Procurement List.

End of Certification

Accordingly, the following products are deleted from the Procurement List:

Products

NSN(s)—Product Name(s)

7530–00–160–8476—Index Sheet Sets, Alphabetical, 9½″ × 6″, Buff
7530–01–456–6079—Index Sheet Sets, Tab 50
7530–01–456–6078—Index Sheet Sets, Tab 31
7530–01–456–6077—Index Sheet Sets, Tab 26
7530–01–456–6076—Index Sheet Sets, Tab 49
7530–01–456–6075—Index Sheet Sets, Tab 47
7530–01–456–6074—Index Sheet Sets, Tab 21
7530–01–456–6073—Index Sheet Sets, Tab 48
7530–01–456–6072—Index Sheet Sets, Tab 20
7530–01–456–6071—Index Sheet Sets, Tab 28
7530–01–456–6070—Index Sheet Sets, Tab 19
7530–01–456–6069—Index Sheet Sets, Tab 30
7530–01–456–6068—Index Sheet Sets, Tab 27
7530–01–456–6067—Index Sheet Sets, Tab 29
7530–01–456–6066—Index Sheet Sets, Tab 22
7530–01–456–6065—Index Sheet Sets, Tab 25
7530–01–456–6064—Index Sheet Sets, Tab 24
7530–01–456–6063—Index Sheet Sets, Tab 1
7530–01–456–6062—Index Sheet Sets, Tab 23
7530–01–456–6061—Index Sheet Sets, Tab 18
7530–01–456–6060—Index Sheet Sets, Tab 17
7530–01–456–6059—Index Sheet Sets, Tab 43
7530–01–456–6058—Index Sheet Sets, Tab 45
7530–01–456–6057—Index Sheet Sets, Tab 46
7530–01–456–6056—Index Sheet Sets, Tab 42
7530–01–456–6055—Index Sheet Sets, Tab 44
7530–01–456–6054—Index Sheet Sets, Tab 41
7530–01–456–6053—Index Sheet Sets, Tab 34
7530–01–456–6052—Index Sheet Sets, Tab 33
7530–01–456–6051—Index Sheet Sets, Tab 37
7530–01–456–6050—Index Sheet Sets, Tab 36
7530–01–456–6049—Index Sheet Sets, Tab 40
7530–01–456–6048—Index Sheet Sets, Tab 12
7530–01–456–6047—Index Sheet Sets, Tab 35
7530–01–456–6046—Index Sheet Sets, Tab 11
7530–01–456–6045—Index Sheet Sets, Tab 15
7530–01–456–6044—Index Sheet Sets, Tab 39
7530–01–456–6043—Index Sheet Sets, Tab 10
7530–01–456–6042—Index Sheet Sets, Tab 5
7530–01–456–6041—Index Sheet Sets, Tab 38
7530–01–456–6040—Index Sheet Sets, Tab 14
7530–01–456–6039—Index Sheet Sets, Tab 32
7530–01–456–6038—Index Sheet Sets, Tab 4
7530–01–456–6037—Index Sheet Sets, Tab 13
7530–01–456–6036—Index Sheet Sets, Tab 16

7530–01–456–6034—Index Sheet Sets, Tab 6
7530–01–456–6033—Index Sheet Sets, Tab 2
7530–01–456–6032—Index Sheet Sets, Tab 9
7530–01–456–6030—Index Sheet Sets, Tab 8
7530–01–456–6028—Index Sheet Sets, Tab 3
7530–01–456–6027—Index Sheet Sets, Tab 7
7530–01–456–2264—Index Sheet Sets, Tab O
7530–01–456–2263—Index Sheet Sets, Tab P
7530–01–456–2262—Index Sheet Sets, Tab N
7530–01–456–2261—Index Sheet Sets, Tab K
7530–01–456–2260—Index Sheet Sets, Tab L
7530–01–456–2259—Index Sheet Sets, Tab M
7530–01–456–2255—Index Sheet Sets, Tab T
7530–01–456–2254—Index Sheet Sets, Tab X
7530–01–456–2253—Index Sheet Sets, Tab Y
7530–01–456–2252—Index Sheet Sets, Tab S
7530–01–456–2251—Index Sheet Sets, Tab Z
7530–01–456–2250—Index Sheet Sets, Tab V
7530–01–456–2248—Index Sheet Sets, Tab W
7530–01–456–2247—Index Sheet Sets, Tab U
7530–01–456–2246—Index Sheet Sets, Tab R
7530–01–456–2245—Index Sheet Sets, Tab Q
7530–01–452–2043—Index Sheet Sets, Tab J
7530–01–452–2042—Index Sheet Sets, Tab H
7530–01–452–2041—Index Sheet Sets, Tab I
7530–01–452–2040—Index Sheet Sets, Tab D
7530–01–452–2039—Index Sheet Sets, Tab F
7530–01–452–2038—Index Sheet Sets, Tab G
7530–01–452–2037—Index Sheet Sets, Tab E
7530–01–452–2036—Index Sheet Sets, Tab C
7530–01–452–2035—Index Sheet Sets, Tab B
7530–01–452–2034—Index Sheet Sets, Tab A

Mandatory Source of Supply: Easter Seals Western and Central Pennsylvania, Pittsburgh, PA.
Contracting Activity: General Services Administration, New York, NY.
NSN(s)—Product Name(s):
6505–01–009–2897—Mineral Oil, Lanolated.
6505–00–890–2027—Mineral Oil, Lanolated.

Mandatory Source of Supply: Montgomery County Chapter, NYSARC, Inc., Amsterdam, NY.
Contracting Activity: Defense Logistics Agency Troop Support.
NSN(s)—Product Name(s):
MR 807—Spoon, Slotted, SS Trim.
MR 809—Turner, Slotted, SS Trim.
MR 810—Skimmer, Kitchen, SS Trim.
MR 814—Spatula, Wide, SS Trim.
MR 912—Duster, Microfiber.
MR 913—Duster, Microfiber, Utility.

Mandatory Source of Supply: Industries for the Blind, Inc., West Allis, WI.
MR 844—Clip, Bag, Mini, Magnetic.
MR 845—Plastic Bag Clip.

Mandatory Source of Supply: The Lighthouse for the Blind, Inc. (Seattle Lighthouse), Seattle, WA.
Contracting Activity: Defense Commissary Agency.
NSN(s)—Product Name(s):
7210–01–244–9734—Mattress, Foam.
7210–01–244–9735—Mattress, Foam.

Mandatory Source of Supply: LC Industries, Inc., Durham, NC.
7210–00–052–7327—Mattress, Foam.
7210–00–290–8297—Mattress, Foam.
7210–00–290–8298—Mattress, Foam.
7210–00–290–8299—Mattress, Foam.
7210–00–290–8300—Mattress, Foam.

Mandatory Source of Supply: Winston-Salem Industries for the Blind, Inc., Winston-Salem, NC.
Contracting Activity: Defense Logistics Agency Troop Support.
NSN(s)—Product Name(s):
7510–01–458–1816—Pencil, Woodcased, Camouflage.
7510–01–451–9176—Pencil, Woodcased.
7510–01–357–8952—Pencil, Writing, Recycled.
7510–00–281–5235—Pencil, General Writing.
7510–00–286–5757—Pencil, General Writing.

Mandatory Source of Supply: Industries for the Blind, Inc., West Allis, WI.
Contracting Activity: General Services Administration, New York, NY.
NSN(s)—Product Name(s):
7520–01–424–4855—Marker, Tube Type, Permanent Ink (Colossal) (Red).
7520–01–424–4870—Marker, Tube Type, Permanent Ink (Colossal) (Green).
7520–01–424–4880—Marker, Tube Type, Permanent Ink (Colossal) (Blue).

Mandatory Source of Supply: Dallas Lighthouse for the Blind, Inc., Dallas, TX.
Contracting Activity: General Services Administration, New York, NY.
NSN(s)—Product Name(s):
7530–00–NIB–0557—Folder, Classification.
7530–00–NIB–0061—Folder, Classification.
7530–00–NIB–0062—Folder, Classification.
7530–00–NIB–0063—Folder, Classification.
7530–00–NIB–0064—Folder, Classification.
7530–00–NIB–0065—Folder, Classification.
7530–00–NIB–0068—Folder, Classification.
7530–00–NIB–0069—Folder, Classification.
7530–00–NIB–0070—Folder, Classification.

Mandatory Source of Supply: Clovernook Center for the Blind and Visually Impaired, Cincinnati, OH.
Contracting Activity: General Services Administration, New York, NY.
NSN(s)—Product Name(s):
7530–00–286–6983—Set, Index Sheet, 3 Hole Punched on 8½″ side, No Tab, Buff, 8½″ x 11″.
7530–00–286–6984—Set, Index Sheet, 3 Hole Punched on 11″ side, No Tab, Buff, 8½″ x 11″.

Mandatory Source of Supply: Louisiana Association for the Blind, Shreveport, LA.
Contracting Activity: General Services Administration, New York, NY.
NSN(s)—Product Name(s):
7530–00–144–9600—Paper, Tabulating.
7530–00–144–9601—Paper, Tabulating.
7530–00–144–9602—Paper, Tabulating.
7530–00–144–9604—Paper, Tabulating.
7530–00–185–6751—Paper, Tabulating.
7530–00–185–6752—Paper, Tabulating Machine.
7530–00–185–6754—Paper, Tabulating.

Mandatory Source of Supply: Association for Vision Rehabilitation and Employment, Inc., Binghamton, NY.
Contracting Activity: General Services Administration, New York, NY.
NSN(s)—Product Name(s):
7530–00–NIB–0495—Index Tabs, Mylar Reinforced.
7530–00–NIB–0494—Index Tabs, Mylar Reinforced.
7530–00–NIB–0493—Index Tabs, Mylar Reinforced.
7530–00–NIB–0492—Index Tabs, Mylar Reinforced.
7530–00–NIB–0491—Index Tabs, Mylar Reinforced.
7530–00–NIB–0490—Index Tabs, Mylar Reinforced.
7530–00–NIB–0489—Index Tabs, Mylar Reinforced.

Mandatory Source of Supply: South Texas Lighthouse for the Blind, Corpus Christi, TX.
Contracting Activity: General Services Administration, New York, NY.
NSN(s)—Product Name(s):
7520–00–NIB–1359—Easel, Wallboard, Magnetic.
7520–00–NIB–1358—Easel, Wallboard, Magnetic.
7520–00–NIB–1357—Easel, Wallboard, Magnetic.

Mandatory Source of Supply: The Lighthouse for the Blind, Inc. (Seattle Lighthouse), Seattle, WA.
Contracting Activity: General Services Administration, New York, NY.
NSN(s)—Product Name(s):
7510–01–386–2265—Pencil, Fine-Line Writing.
7510–00–286–5750—Pencil, Fine-Line Writing.
7510–00–286–5751—Pencil, Fine-Line Writing.
7510–00–286–5755—Pencil, Fine-Line Writing.

Mandatory Source of Supply: Central Association for the Blind & Visually

Impaired Utica, NY Industries for the Blind, Inc., West Allis, WI.

Contracting Activity: General Services Administration, New York, NY.

NSN(s)—Product Name(s):

6515–00–NIB–8020—Gloves, Exam, Nitrile, Latex-Free, Powder-Free, W/ Inner Aloe coating, 3 mil (palm), Green, x-Large.

6515–00–NIB–8019—Gloves, Exam, Nitrile, Latex-Free, Powder-Free, W/ Inner Aloe coating, 3 mil (palm), Green, Large.

6515–00–NIB–8018—Gloves, Exam, Nitrile, Latex-Free, Powder-Free, W/ Inner Aloe coating, 3 mil (palm), Green, Medium.

6515–00–NIB–8017—Gloves, Exam, Nitrile, Latex-Free, Powder-Free, W/ Inner Aloe coating, 3 mil (palm), Green, Small.

6515–00–NIB–8016—Gloves, Exam, Nitrile, Latex-Free, Powder-Free, W/ Inner Aloe coating, 3 mil (palm), Green, x-Small.

6515–00–NIB–7231—Gloves, Exam, Nitrile, Latex-Free, Powder-Free, W/Aloe lining, Green, x-Large.

6515–00–NIB–7230—Gloves, Exam, Nitrile, Latex-Free, Powder-Free, W/Aloe lining, Green, Large.

6515–00–NIB–7229—Gloves, Exam, Nitrile, Latex-Free, Powder-Free, W/Aloe lining, Green, Medium.

6515–00–NIB–7228—Gloves, Exam, Nitrile, Latex-Free, Powder-Free, W/Aloe lining, Green, Small Mandatory Source of Supply: Bosma Industries for the Blind, Inc., Indianapolis, IN.

Contracting Activity: Department of Veterans Affairs, NAC.

NSN(s)—Product Name(s):

7510–00–NIB–0566—Custom Planners & Accessory Kit.

7510–00–NIB–0568—Custom Planners & Accessory Kit.

7510–00–NIB–0571—Custom Planners & Accessory Kit.

7510–00–NIB–0574—Custom Planners & Accessory Kit.

7510–00–NIB–0576—Custom Planners & Accessory Kit.

Mandatory Source of Supply: The Chicago Lighthouse for People Who Are Blind or Visually Impaired, Chicago, IL.

Contracting Activity: General Services Administration, Household and Industrial Furniture, Arlington, VA.

NSN(s)—Product Name(s):

7530–00–243–9436—Card, Index, Unruled, White, 5″ x 8″.

7530–00–243–9437—Card, Index, Ruled, White, 5″ x 8″.

7530–00–244–7447—Card, Index, Ruled, Green, 5″ x 8″.

7530–00–244–7451—Card, Index, Unruled, Buff, 4″ x 6″.

7530–00–244–7453—Card, Index, Unruled, Green, 3″ x 5″.

7530–00–244–7456—Card, Index, Unruled, Salmon, 3″ x 5″.

7530–00–244–7459—Card, Index, Unruled, White, 4″ x 6″.

7530–00–247–0310—Card, Index, Ruled, Buff, 3″ x 5″.

7530–00–247–0311—Card, Index, Ruled, Buff, 5″ x 8″.

7530–00–247–0315—Card, Index, Ruled, Salmon, 5″ x 8″.

7530–00–247–0318—Card, Index, Ruled, White, 3″ x 5″.

7530–00–264–3723—Card, Index, Ruled, White, 4″ x 6″.

7530–00–949–2787—Card, Index, Unruled, Pink, 5″ x 8″.

7530–00–238–4331—Card, Index, Unruled, Salmon, 5″ x 8″.

Mandatory Source of Supply: Louisiana Association for the Blind, Shreveport, LA.

Contracting Activity: General Services Administration, New York, NY.

Barry S. Lineback,

Director, Business Operations.

[FR Doc. 2015–21511 Filed 9–1–15; 8:45 am]

BILLING CODE 6353–01–P

COMMODITY FUTURES TRADING COMMISSION

Agricultural Advisory Committee; Notice of Meeting

AGENCY: Commodity Futures Trading Commission.

ACTION: Notice of meeting.

SUMMARY: The Commodity Futures Trading Commission (CFTC or Commission) announces that on September 22, 2015, from 10:30 a.m. to 3:30 p.m., the Agricultural Advisory Committee (AAC) will hold a public meeting at the CFTC's Washington, DC, headquarters. The meeting will focus on, among other issues, topics related to speculative position limits for agricultural commodities and other agricultural market issues.

DATES: The meeting will be held on Tuesday, September 22, 2015, from 10:30 a.m. to 3:30 p.m. Members of the public who wish to submit written statements in connection with the meeting should submit them by September 10, 2015.

ADDRESSES: The meeting will take place in the first floor Conference Center at the Commission's headquarters, Three Lafayette Centre, 1155 21st Street NW., Washington, DC 20581. Written statements should be submitted to: Agricultural Advisory Committee, c/o Cory Claussen, Commodity Futures Trading Commission, Three Lafayette Centre, 1155 21st Street NW., Washington, DC 20581. Statements may also be submitted by electronic mail to: *aac@cftc.gov.* Any statements submitted in connection with the committee meeting may be made available to the public, including publication on the CFTC Web site, *www.cftc.gov.*

FOR FURTHER INFORMATION CONTACT: Cory Claussen, AAC Designated Federal Officer, Commodity Futures Trading Commission, Three Lafayette Centre, 1155 21st Street NW., Washington, DC 20581; (202) 418–5383.

SUPPLEMENTARY INFORMATION: The meeting is open to the public with seating on a first-come, first-served basis. The meeting will be recorded and posted on the CFTC Web site, *www.cftc.gov.* Members of the public may watch a live webcast on the Commission's Web site. Members of the public may also listen to the meeting by telephone by calling a domestic toll-free or international toll or toll-free number to connect to a live, listen-only audio feed. These numbers, along with the conference and/or access codes will be posted on the CFTC Web site prior to the AAC meeting. Call-in participants should be prepared to provide their first name, last name, and affiliation. After the meeting, a transcript of the meeting will be published on the CFTC Web site, *www.cftc.gov.* Persons requiring special accommodations to attend the meeting because of a disability should notify the contact person above.

Authority: 5 U.S.C. app. 2 10(a)(2).

Dated: August 28, 2015.

Christopher J. Kirkpatrick,

Secretary of the Commission.

[FR Doc. 2015–21767 Filed 9–1–15; 8:45 am]

BILLING CODE 6351–01–P

COUNCIL OF THE INSPECTORS GENERAL ON INTEGRITY AND EFFICIENCY

Senior Executive Service Performance Review Board Membership

AGENCY: Council of the Inspectors General on Integrity and Efficiency.

ACTION: Notice.

SUMMARY: This notice sets forth the names and titles of the current membership of the Council of the Inspectors General on Integrity and Efficiency (CIGIE) Performance Review Board as of October 1, 2015.

DATES: *Effective Date:* October 1, 2015.

FOR FURTHER INFORMATION CONTACT: Individual Offices of Inspectors General at the telephone numbers listed below.

SUPPLEMENTARY INFORMATION:

I. Background

The Inspector General Act of 1978, as amended, created the Offices of Inspectors General as independent and objective units to conduct and supervise audits and investigations relating to Federal programs and operations. The Inspector General Reform Act of 2008, established the Council of the Inspectors

General on Integrity and Efficiency (CIGIE) to address integrity, economy, and effectiveness issues that transcend individual Government agencies; and increase the professionalism and effectiveness of personnel by developing policies, standards, and approaches to aid in the establishment of a well-trained and highly skilled workforce in the Offices of Inspectors General. The CIGIE is an interagency council whose executive chair is the Deputy Director for Management, Office of Management and Budget, and is comprised principally of the 72 Inspectors General (IGs).

II. CIGIE Performance Review Board

Under 5 U.S.C. 4314(c)(1)–(5), and in accordance with regulations prescribed by the Office of Personnel Management, each agency is required to establish one or more Senior Executive Service (SES) performance review boards. The purpose of these boards is to review and evaluate the initial appraisal of a senior executive's performance by the supervisor, along with any recommendations to the appointing authority relative to the performance of the senior executive. The current members of the Council of the Inspectors General on Integrity and Efficiency Performance Review Board, as of October 1, 2015, are as follows:

Agency for International Development

Phone Number: (202) 712–1150
CIGIE Liaison—Justin Brown (202) 712–1150
Lisa Risley—Assistant Inspector General for Investigations
Melinda Dempsey—Deputy Assistant Inspector General for Audit
Lisa McClennon—Deputy Assistant Inspector General for Investigations
Alvin A. Brown—Deputy Assistant Inspector General for Audit
Lisa Goldfluss—Legal Counsel to the Inspector General
Robert Ross—Assistant Inspector General for Management

Department of Agriculture

Phone Number: (202) 720–8001
CIGIE Liaison—Dina J. Barbour (202) 720–8001
David R. Gray—Deputy Inspector General
Christy A. Slamowitz—Counsel to the Inspector General
Gilroy Harden—Assistant Inspector General for Audit
Rodney G. DeSmet—Deputy Assistant Inspector General for Audit
Steven H. Ricicrode, Jr.—Deputy Assistant Inspector General for Audit
Ann M. Coffey—Assistant Inspector General for Investigations
Lane M. Timm—Assistant Inspector General for Management

Department of Commerce

Phone Number: (202) 482–4661
CIGIE Liaison—Clark Reid (202) 482–4661
Andrew Katsaros—Principle Assistant Inspector General for Audit and Evaluation
Allen Crawley—Assistant Inspector General for Systems Acquisition and IT Security
Ann Eilers—Assistant Inspector General for Administration

Department of Defense

Phone Number: (703) 604–8324
CIGIE Liaison—David Gross (703) 604–8324
Daniel R. Blair—Deputy Chief of Staff
James B. Burch—Deputy Inspector General for Investigations
Michael S. Child, Sr.—Deputy Inspector General for Overseas Contingency Operations
Carol N. Gorman—Assistant Inspector General for Readiness and Cyber Operations
Carolyn R. Hantz—Assistant Inspector General for Audit Policy and Oversight
Amy J. Frontz—Principal Assistant Inspector General for Auditing
Marguerite C. Garrison—Deputy Inspector General for Administrative Investigations
Glenn A. Fine—Principal Deputy Inspector General
Kenneth P. Moorefield—Deputy Inspector General for Special Plans and Operations
Dermot F. O'Reilly—Assistant Inspector General for International Operations
Michael J. Roark—Assistant Inspector General for Contract Management and Payment
Henry C. Shelley, Jr.—General Counsel
Randolph R. Stone—Deputy Inspector General for Policy and Oversight
Anthony C. Thomas—Deputy Inspector General for Intelligence and Special Program Assessments
Ross W. Weiland—Assistant Inspector General for Investigations, Internal Operations
Jacqueline L. Wicecarver—Assistant Inspector General for Acquisition, Parts, and Inventory
Lorin T. Venable—Assistant Inspector General for Financial Management and Reporting

Department of Education

Phone Number: (202) 245–6900
CIGIE Liaison—Janet Harmon (202) 245–6076
Wanda Scott—Assistant Inspector General for Management Services
Patrick Howard—Assistant Inspector General for Audit
Bryon Gordon—Deputy Assistant Inspector General for Audit
Aaron Jordan—Assistant Inspector General for Investigations
Charles Coe—Assistant Inspector General for Information Technology Audits and Computer Crime Investigations
Marta Erceg—Counsel to the Inspector General

Department of Energy

Phone Number: (202) 586–4393
CIGIE Liaison—Tara Porter (202) 586–5798
John Hartman—Deputy Inspector General for Investigations
Rickey Hass—Deputy Inspector General for Audits and Inspections
Daniel Weeber—Assistant Inspector General for Audits and Administration
April Stephenson—Assistant Inspector General for Inspections
John Dupuy—Assistant Inspector General for Investigations
Tara Porter—Assistant Inspector General for Management and Administration
Virginia Grebasch—Counsel to the Inspector General
David Sedillo—Director of Audits Western Region
Jack Rouch—Director of Audits Central Region
Debra Solmonson—Director of Audits Eastern Region

Environmental Protection Agency

CIGIE Liaison—Jennifer Kaplan (202) 566–0918
Charles Sheehan—Deputy Inspector General
Aracely Nunez-Mattocks—Chief of Staff to the Inspector General
Patrick Sullivan—Assistant Inspector General for Investigations
Carolyn Copper—Assistant Inspector General for Program Evaluation
Alan Larsen—Counsel to the Inspector General and Assistant Inspector General for Congressional and Public Affairs
Kevin Christensen—Assistant Inspector General for Audits

Federal Labor Relations Authority

Phone Number: (202) 218–7744
CIGIE Liaison—Dana Rooney (202) 218–7744
Dana Rooney—Inspector General

Federal Maritime Commission

Phone Number: (202) 523–5863
CIGIE Liaison—Jon Hatfield (202) 523–5863
Jon Hatfield—Inspector General

Federal Trade Commission

Phone Number: (202) 326–3295
CIGIE Liaison—Roslyn A. Mazer (202) 326–3295
Roslyn A. Mazer—Inspector General

General Services Administration

Phone Number: (202) 501–0450
CIGIE Liaison—Sarah S. Breen (202) 219–1351
Robert C. Erickson—Deputy Inspector General
Richard P. Levi—Counsel to the Inspector General
Theodore R. Stehney—Assistant Inspector General for Auditing
Nick Goco—Principal Deputy Assistant Inspector General for Auditing
James P. Hayes—Deputy Assistant Inspector General for Acquisition Programs Audits
Lee Quintyne—Assistant Inspector General for Investigations
Stephanie E. Burgoyne—Assistant Inspector General for Administration
Larry L. Gregg—Associate Inspector General

Department of Health and Human Services

Phone Number: (202) 619–3148
CIGIE Liaison—Elise Stein (202) 619–2686
Joanne Chiedi—Principal Deputy Inspector General
Robert Owens, Jr.—Deputy Inspector General for Management and Policy
Caryl Brzymialkiewicz—Assistant Inspector General/Chief Data Officer
Gary Cantrell—Deputy Inspector General for Investigations
Les Hollie—Assistant Inspector General for Investigations
Tyler Smith—Assistant Inspector General for Investigations
Suzanne Murrin—Deputy Inspector General for Evaluation and Inspections
Ann Maxwell—Assistant Inspector General for Evaluation and Inspections
Gregory Demske—Chief Counsel to the Inspector General
Robert DeConti—Assistant Inspector General for Legal Affairs
Gloria Jarmon—Deputy Inspector General for Audit Services
Brian Ritchie—Assistant Inspector General for Audit Services
Thomas Salmon—Assistant Inspector General for Audit Services

Department of Homeland Security

Phone Number: (202) 254–4100
CIGIE Liaison—Erica Paulson (202) 254–0938
Laurel Rimon—Counsel to the Inspector General
Louise M. McGlathery—Assistant Inspector General for Management
Andrew Oosterbaan—Assistant Inspector General for Investigations
John E. McCoy II—Assistant Inspector General for Integrity and Quality Oversight
John Kelly—Assistant Inspector General for Emergency Management Oversight
Mark Bell—Assistant Inspector General for Audits
Anne L. Richards—Assistant Inspector General for Inspections
Sondra McCauley—Assistant Inspector General for Information Technology Audits
Doris A. Wojnarowski—Deputy Assistant Inspector General for Management
James P. Gaughran—Deputy Assistant Inspector General for Emergency Management Oversight
Wayne H. Salzgaber—Senior Advisor

Department of Housing and Urban Development

Phone Number: (202) 708–0430
CIGIE Liaison—Holley Miller (202) 402–2741
Joe Clarke—Assistant Inspector General for Investigations
Nicholas Padilla—Deputy Assistant Inspector General for Investigations
Randy McGinnis—Assistant Inspector General for Audit
Frank Rokosz—Deputy Assistant Inspector General for Audit
John Buck—Deputy Assistant Inspector General for Audit
Robert Wuhrman—Deputy Assistant Inspector General for Technology
Kathy Saylor—Assistant Inspector General for Evaluation
Jeremy Kirkland—Counsel to the Inspector General

Department of the Interior

Phone Number: (202) 208–5745
CIGIE Liaison—Joann Gauzza (202) 208–5745
Steve Hardgrove—Chief of Staff
Bernard Mazer—Senior Policy Advisor
Kimberly Elmore—Assistant Inspector General for Audits, Inspections and Evaluations
Matt Elliott—Assistant Inspector General for Investigations
Bruce Delaplaine—General Counsel
Roderick Anderson—Assistant Inspector General for Management

Department of Justice

Phone Number: (202) 514–3435
CIGIE Liaison—Jay Lerner (202) 514–3435
Robert P. Storch—Deputy Inspector General
William M. Blier—General Counsel
Jason R. Malmstrom—Assistant Inspector General for Audit
Gregory T. Peters—Assistant Inspector General for Management and Planning
Nina S. Pelletier—Assistant Inspector Generator Evaluation and Inspections
Daniel C. Beckhard—Deputy Assistant Inspector General for Oversight and Review
Eric A. Johnson—Assistant Inspector General for Investigations
Mark L. Hayes—Deputy Assistant Inspector General for Audit

Department of Labor

Phone Number: (202) 693–5100
CIGIE Liaison—Luiz Santos (202) 693–7062
Larry D. Turner—Deputy Inspector General
Howard Shapiro—Counsel to the Inspector General
Elliot P. Lewis—Assistant Inspector General for Audit
Debra D. Pettitt—Deputy Assistant Inspector General for Audit
Lester Fernandez—Assistant Inspector General for Labor Racketeering and Fraud Investigations
Richard S. Clark II—Deputy Assistant Inspector General for Labor Racketeering and Fraud Investigations
Thomas D. Williams—Assistant Inspector General for Management and Policy

National Aeronautics and Space Administration

Phone Number: (202) 358–1220
CIGIE Liaison—Renee Juhans (202) 358–1712
Gail Robinson—Deputy Inspector General
Frank LaRocca—Counsel to the Inspector General
James Ives—Assistant Inspector General for Investigations
James Morrison—Assistant Inspector General for Audits

National Endowment for the Arts

Phone Number: (202) 682–5774
CIGIE Liaison—Tonie Jones (202) 682–5402
Tonic Jones—Inspector General

National Science Foundation

Phone Number: (703) 292–7100
CIGIE Liaison—Susan Carnohan (703) 292–5011 and Maury Pully (703) 292–5059
Brett M. Baker—Assistant Inspector General for Audit
Alan Boehm—Assistant Inspector General for Investigations
Kenneth Chason—Counsel to the Inspector General

National Security Agency

Phone Number: (301) 688–6666
CIGIE Liaison—Janet Greer (443) 479–3921
Bob Jones— Asst. Inspector General for Intelligence Oversight

Brad Siersdorfer—Asst. Inspector General for Field Inspections
Jim Protin—Asst. Inspector General for Investigations
Steve Ryan—Asst. Inspector General for Audits

Nuclear Regulatory Commission

Phone Number: (301) 415–5930
CIGIE Liaison—Deborah S. Huber (301) 415–5930
David C. Lee—Deputy Inspector General
Stephen D. Dingbaum—Assistant Inspector General for Audits
Joseph A. McMillan—Assistant Inspector General for Investigations

Office of Personnel Management

Phone Number: (202) 606–1200
CIGIE Liaison—Joyce D. Price (202) 606–2156
Norbert E. Vint—Deputy Inspector General
Terri Fazio—Assistant Inspector General for Management
J. David Cope—Assistant Inspector General for Legal Affairs
Michelle B. Schmitz—Assistant Inspector General for Investigations
Kimberly A. Howell—Deputy Assistant Inspector General for Investigations
Michael R. Esser—Assistant Inspector General for Audits
Melissa D. Brown—Deputy Assistant Inspector General for Audits
Lewis F. Parker—Deputy Assistant Inspector General for Audits
Gopala Seelamneni—Chief Information Technology Officer

Peace Corps

Phone Number: (202) 692–2900
CIGIE Liaison—Joaquin Ferrao (202) 692–2921
Kathy Buller—Inspector General (Foreign Service)

United States Postal Service

Phone Number: (703) 248–2100
CIGIE Liaison—Agapi Doulaveris (703) 248–2286
Elizabeth Martin—General Counsel
Gladis Griffith—Deputy General Counsel
Mark Duda—Assistant Inspector General for Audits

Railroad Retirement Board

Phone Number: (312) 751–4690
CIGIE Liaison—Jill Roellig (312) 751–4993
Patricia A. Marshall—Counsel to the Inspector General
Heather Dunahoo—Assistant Inspector General for Audit
Louis Rossignuolo—Assistant Inspector General for Investigations

Small Business Administration

Phone Number: (202) 205–6586
CIGIE Liaison—Robert F. Fisher (202) 205–6583 and Sheldon R. Shoemaker (202) 205–0080
Troy M. Meyer—Assistant Inspector General for Auditing
Mark P. Hines—Assistant Inspector General for Investigations
Robert F. Fisher—Assistant Inspector General for Management and Administration

Social Security Administration

Phone Number: (410) 966–8385
CIGIE Liaison—Kristin Klima (202) 358–6319
Rona Lawson—Deputy Assistant Inspector General for Audit
Joseph Gangloff—Counsel to the Inspector General
Michael Robinson—Assistant Inspector General for Investigations
Kelly Bloyer—Assistant Inspector General for Communications and Resource Management

Special Inspector General for Troubled Asset Relief Program

Phone Number: (202) 622–1419
CIGIE Liaison—B. Chad Bungard (202) 927–8938
Peggy Ellen—Deputy Special Inspector General
Charles (Chris) Gregorski—Deputy Special Inspector General, Investigations
B. Chad Bungard—General Counsel
Bruce Gimbel—Deputy Special Inspector General, Audit and Evaluations

Department of State and the Broadcasting Board of Governors

Phone Number: (202) 663–0340
CIGIE Liaison—Nicole Lowery (703) 284–1828
Emilia DiSanto—Deputy Inspector General
Harrison Ford—Deputy General Counsel
Norman P. Brown—Assistant Inspector General for Audits
Geoffrey A. Cherrington—Assistant Inspector General for Investigations
Karen J. Ouzts—Assistant Inspector General for Management
Jennifer L. Costello—Assistant Inspector General for Evaluations and Special Projects
Gayle Voshell—Deputy Assistant Inspector General for Audits
Tinh T. Nguyen—Deputy Assistant Inspector General for Middle East Region Operations
Michael Ryan—Deputy Assistant Inspector General for Investigations
Cathy D. Alix—Deputy Assistant Inspector General for Management

Department of Transportation

Phone Number: (202) 366–1959
CIGIE Liaison—Nathan P. Richmond: (202) 493–0422
Ann M. Calvaresi Barr—Deputy Inspector General
Brian A. Dettelbach—Assistant Inspector General for Legal, Legislative, and External Affairs
Eileen Ennis—Assistant Inspector General for Administration
Michelle T. McVicker—Principal Assistant Inspector General for Investigations
Lou E. Dixon—Principal Assistant Inspector General for Auditing and Evaluation
Joseph W. Come—Deputy Principal Assistant Inspector General for Auditing and Evaluation
Matthew E. Hampton—Assistant Inspector General for Aviation Audits
Charles A. Ward—Assistant Inspector General for Aviation Audits
Louis C. King—Assistant Inspector General for Financial and Information Technology Audits
Mitchell L. Behm—Assistant Inspector General for Surface Transportation Audits
Mary Kay Langan-Feirson—Assistant Inspector General for Acquisition and Procurement Audits

Department of the Treasury

Phone Number: (202) 622–1090
CIGIE Liaison—Susan G. Marshall (202) 927–9842
Richard K. Delmar—Counsel to the Inspector General
Tricia L. Hollis—Assistant Inspector General for Management
Marla A. Freedman—Assistant Inspector General for Audit
Robert A. Taylor—Deputy Assistant Inspector General for Audit (Program Audits)
John L. Phillips—Assistant Inspector General for Investigations
Donna F. Joseph—Assistant Inspector General for Financial Management, Information Technology, and Financial Assistance Audit

Treasury Inspector General for Tax Administration/Department of the Treasury

Phone Number: (202) 622–6500
CIGIE Liaison—Michael Raschiatore (202) 927–0172
Michael A. Phillips—Acting Principal Deputy Inspector General
Timothy Camus—Deputy Inspector General for Investigations
Michael McKenney—Deputy Inspector General for Audit
Michael Delgado—Assistant Inspector General for Investigations
Russell Martin—Assistant Inspector General for Audit (Returns Processing and Account Services)

Greg Kutz—Acting Deputy Inspector General for Inspections and Evaluations/Assistant Inspector General for Audit (Management Services and Exempt Organizations)
Matthew Weir—Assistant Inspector General for Audit (Compliance and Enforcement Operations)
Gayle Hatheway—Deputy Assistant Inspector General for Investigations
James Jackson—Deputy Assistant Inspector General for Investigations
Randy Silvis—Deputy Assistant Inspector General for Investigations
Gladys Hernandez—Chief Counsel
George Jakabcin—Chief Information Officer

Department of Veterans Affairs

Phone Number: (202) 461–4720
CIGIE Liaison—Joanne Moffett (202) 461–4720
Maureen T. Regan—Counselor to the Inspector General
Quentin G. Aucoin—Assistant Inspector General for Investigations
Gary K. Abe—Deputy Assistant Inspector General for Audits and Evaluations (Field Operations)
Dana Moore—Assistant Inspector General for Management and Administration
Jason R. Woodward—Deputy Assistant Inspector General for Management and Administration
John D. Daigh—Assistant Inspector General for Healthcare Inspections
Claire McDonald—Deputy Assistant Inspector General for Healthcare Inspections

Dated: August 21, 2015.

Mark D. Jones,

Executive Director.

[FR Doc. 2015–21406 Filed 9–1–15; 8:45 am]

BILLING CODE 6820–C9–P

DEPARTMENT OF DEFENSE

Office of the Secretary

Judicial Proceedings Since Fiscal Year 2012 Amendments Panel (Judicial Proceedings Panel); Notice of Federal Advisory Committee Meeting

AGENCY: Department of Defense.

ACTION: Notice of meeting.

SUMMARY: The Department of Defense is publishing this notice to announce the following Federal Advisory Committee meeting of the Judicial Proceedings since Fiscal Year 2012 Amendments Panel (''the Judicial Proceedings Panel'' or ''the Panel''). The meeting is open to the public.

DATES: A meeting of the Judicial Proceedings Panel will be held on Friday, September 18, 2015. The Public Session will begin at 9:00 a.m. and end at 5:00 p.m.

ADDRESSES: The Holiday Inn Arlington at Ballston, 4610 N. Fairfax Drive, Arlington, Virginia 22203.

FOR FURTHER INFORMATION CONTACT: Ms. Julie Carson, Judicial Proceedings Panel, One Liberty Center, 875 N. Randolph Street, Suite 150, Arlington, VA 22203. Email: *whs.pentagon.em.mbx.judicial-panel@mail.mil.* Phone: (703) 693–3849. Web site: *http://jpp.whs.mil.*

SUPPLEMENTARY INFORMATION: This public meeting is being held under the provisions of the Federal Advisory Committee Act of 1972 (5 U.S.C., Appendix, as amended), the Government in the Sunshine Act of 1976 (5 U.S.C. 552b, as amended), and 41 CFR 102–3.150.

Purpose of the Meeting: In Section 576(a)(2) of the National Defense Authorization Act for Fiscal Year 2013 (Public Law 112–239), as amended, Congress tasked the Judicial Proceedings Panel to conduct an independent review and assessment of judicial proceedings conducted under the Uniform Code of Military Justice (UCMJ) involving adult sexual assault and related offenses since the amendments made to the UCMJ by section 541 of the National Defense Authorization Act for Fiscal Year 2012 (Pub. L. 112–81; 125 Stat. 1404), for the purpose of developing recommendations for improvements to such proceedings. At this meeting, the Panel will deliberate on issues relating to restitution and compensation for sexual assault victims as well as retaliation against individuals who report incidents of sexual assault within the military. It will also review crime data collection and analysis in various civilian jurisdictions and data collection initiatives of the Department of Defense Sexual Assault and Prevention and Response Office. The Panel is interested in written and oral comments from the public, including non-governmental organizations, relevant to these issues or any of the Panel's tasks.

Agenda:

- 8:30–9:00 Administrative Session *(41 CFR 102–3.160, not subject to notice & open meeting requirements)*
- 9:00–10:30 Deliberations on Compensation and Restitution *(Public meeting begins)*
- 10:30–12:00 Deliberations on Retaliation
- 12:00–1:00 Lunch
- 1:00–2:30 Civilian Crime Data Collection and Analysis
- 2:30–4:00 How Criminologists Study the Justice System
- 4:00–4:45 Overview of Department of Defense Sex Assault Data Collection Initiatives
- 4:45–5:00 Public Comment

Availability of Materials for the Meeting: A copy of the September 18, 2015 meeting agenda or any updates or changes to the agenda, to include individual speakers not identified at the time of this notice, as well as other materials presented related to the meeting, may be obtained at the meeting or from the Panel's Web site at *http://jpp.whs.mil.*

Public's Accessibility to the Meeting: Pursuant to 5 U.S.C. 552b and 41 CFR 102–3.140 through 102–3.165, and the availability of space, this meeting is open to the public. Seating is limited and is on a first-come basis.

Special Accommodations: Individuals requiring special accommodations to access the public meeting should contact Ms. Julie Carson at *whs.pentagon.em.mbx.judicial-panel@mail.mil* at least five (5) business days prior to the meeting so that appropriate arrangements can be made.

Procedures for Providing Public Comments: Pursuant to 41 CFR 102–3.140 and section 10(a)(3) of the Federal Advisory Committee Act of 1972, the public or interested organizations may submit written comments to the Panel about its mission and topics pertaining to this public session. Written comments must be received by Ms. Julie Carson at least five (5) business days prior to the meeting date so that they may be made available to the Judicial Proceedings Panel for their consideration prior to the meeting. Written comments should be submitted via email to Ms. Carson at *whs.pentagon.em.mbx.judicial-panel@mail.mil* in the following formats: Adobe Acrobat or Microsoft Word. Please note that since the Judicial Proceedings Panel operates under the provisions of the Federal Advisory Committee Act, as amended, all written comments will be treated as public documents and will be made available for public inspection. If members of the public are interested in making an oral statement, a written statement must be submitted along with a request to provide an oral statement. Oral presentations by members of the public will be permitted between 4:45 p.m. and 5:00 p.m. on September 18, 2015 in front of the JPP members. The number of oral presentations to be made will depend on the number of requests received from members of the public on a first-come basis. After reviewing the requests for oral presentation, the Chairperson and the Designated Federal Officer will, if they determine the

statement to be relevant to the Panel's mission, allot five minutes to persons desiring to make an oral presentation.

Committee's Designated Federal Officer: The Panel's Designated Federal Officer is Ms. Maria Fried, Department of Defense, Office of the General Counsel, 1600 Defense Pentagon, Room 3B747, Washington, DC 20301–1600.

Dated: August 27, 2015.

Aaron Siegel,

Alternate OSD Federal Register Liaison Officer, Department of Defense.

[FR Doc. 2015–21649 Filed 9–1–15; 8:45 am]

BILLING CODE 5001–06–P

DEPARTMENT OF DEFENSE

Department of the Navy

[Docket ID: USN–2015–HQ–0013]

Proposed Collection; Comment Request

AGENCY: Naval Safety Center, Department of the Navy, DoD.

ACTION: Notice.

SUMMARY: In compliance with the *Paperwork Reduction Act of 1995,* the Naval Safety Center announces a proposed public information collection and seeks public comment on the provisions thereof. Comments are invited on: (a) Whether the proposed collection of information is necessary for the proper performance of the functions of the agency, including whether the information shall have practical utility; (b) the accuracy of the agency's estimate of the burden of the proposed information collection; (c) ways to enhance the quality, utility, and clarity of the information to be collected; and (d) ways to minimize the burden of the information collection on respondents, including through the use of automated collection techniques or other forms of information technology.

DATES: Consideration will be given to all comments received by November 2, 2015.

ADDRESSES: You may submit comments, identified by docket number and title, by any of the following methods:

- *Federal eRulemaking Portal: http://www.regulations.gov.* Follow the instructions for submitting comments.
- *Mail:* Department of Defense, Office of the Deputy Chief Management Officer, Directorate of Oversight and Compliance, Regulatory and Audit Matters Office, 9010 Defense Pentagon, Washington, DC 20301–9010.

Instructions: All submissions received must include the agency name, docket number and title for this **Federal Register** document. The general policy for comments and other submissions from members of the public is to make these submissions available for public viewing on the Internet at *http://www.regulations.gov* as they are received without change, including any personal identifiers or contact information.

Any associated form(s) for this collection may be located within this same electronic docket and downloaded for review/testing. Follow the instructions at *http://www.regulations.gov* for submitting comments. Please submit comments on any given form identified by docket number, form number, and title.

FOR FURTHER INFORMATION CONTACT: To request more information on this proposed information collection or to obtain a copy of the proposal and associated collection instruments, please write to the Naval Safety Center, Attention: Records Manager, 375 A Street, Norfolk, VA 23511–4399 or call the Naval Safety Center at 757 444–3520 ext. 7011.

SUPPLEMENTARY INFORMATION:

Title, Associated Form, and OMB Number: Risk Management Information (RMI) system; OPNAV 3750/16 Safety Investigation Report Enclosure (Promise of Confidentiality) Advice to Witness, OPNAV 5102/10 Advice to Witness, OPNAV 5102/11 Advice to Witness (Promise of Confidentiality); OMB Control Number 0703–XXXX.

Needs and Uses: The information collection requirement is necessary to collect information on injuries/fatalities, occupational illnesses required of Federal governmental agencies by the Occupational Safety and Health Administration (OSHA), and pertinent information for property damage occurring during DON operations. The data maintained in this system will be used for analytical purposes to improve the Department of the Navy's accident prevention policies, procedures, standards and operations, as well as to ensure internal data quality assurance. The collection will also help to ensure that all individuals receive required safety, fire, security, force protection, and emergency management training courses necessary to perform assigned duties and comply with Federal, DoD, and DON related regulations.

Affected Public: Individuals & Household, Federal Government.

Annual Burden Hours: 37.5 hours.

Number of Respondents: 25.

Responses per Respondent: 1.

Average Burden per Response: 1.5 hour.

Frequency: On occasion.

Respondents are Federal contractors who are involved in an incident or mishap while performing duties in support of a DON contract, or while in/on a DON base, building, vessel, vehicle, or other facility; Military retirees and foreign nationals who are involved in an incident while in/on a DON base, building, vessel, vehicle, or other facility; Military dependents who are involved in an incident while in/on a DON base, building, vessel, vehicle, or other facility, or while accompanying their military sponsor.

Dated: August 27, 2015.

Aaron Siegel,

Alternate OSD Federal Register Liaison Officer, Department of Defense.

[FR Doc. 2015–21588 Filed 9–1–15; 8:45 am]

BILLING CODE 5001–06–P

DEPARTMENT OF EDUCATION

[Docket No.: ED–2015–ICCD–0080]

Agency Information Collection Activities; Submission to the Office of Management and Budget for Review and Approval; Comment Request; Income Based Repayment—Notifications

AGENCY: Federal Student Aid (FSA), Department of Education (ED).

ACTION: Notice.

SUMMARY: In accordance with the Paperwork Reduction Act of 1995 (44 U.S.C. chapter 3501 *et seq.*), ED is proposing an extension of an existing information collection.

DATES: Interested persons are invited to submit comments on or before October 2, 2015.

ADDRESSES: To access and review all the documents related to the information collection listed in this notice, please use *http://www.regulations.gov* by searching the Docket ID number ED–2015–ICCD–0080. Comments submitted in response to this notice should be submitted electronically through the Federal eRulemaking Portal at *http://www.regulations.gov* by selecting the Docket ID number or via postal mail, commercial delivery, or hand delivery. Please note that comments submitted by fax or email and those submitted after the comment period will not be accepted. Written requests for information or comments submitted by postal mail or delivery should be addressed to the Director of the Information Collection Clearance Division, U.S. Department of Education, 400 Maryland Avenue SW., LBJ, Room 2E115, Washington, DC 20202–4537.

FOR FURTHER INFORMATION CONTACT: For specific questions related to collection activities, please contact Beth Grebeldinger, 202–377–4018.

SUPPLEMENTARY INFORMATION: The Department of Education (ED), in accordance with the Paperwork Reduction Act of 1995 (PRA) (44 U.S.C. 3506(c)(2)(A)), provides the general public and Federal agencies with an opportunity to comment on proposed, revised, and continuing collections of information. This helps the Department assess the impact of its information collection requirements and minimize the public's reporting burden. It also helps the public understand the Department's information collection requirements and provide the requested data in the desired format. ED is soliciting comments on the proposed information collection request (ICR) that is described below. The Department of Education is especially interested in public comment addressing the following issues: (1) Is this collection necessary to the proper functions of the Department; (2) will this information be processed and used in a timely manner; (3) is the estimate of burden accurate; (4) how might the Department enhance the quality, utility, and clarity of the information to be collected; and (5) how might the Department minimize the burden of this collection on the respondents, including through the use of information technology. Please note that written comments received in response to this notice will be considered public records.

Title of Collection: Income Based Repayment—Notifications.

OMB Control Number: 1845–0114.

Type of Review: An extension of an existing information collection.

Respondents/Affected Public: Individuals or Households, Private Sector, State, Local and Tribal Governments.

Total Estimated Number of Annual Responses: 2,894,005.

Total Estimated Number of Annual Burden Hours: 231,520.

Abstract: The Higher Education Act of 1965, as amended (HEA), established the Federal Family Education Loan (FFEL) Program under title IV, part B. Section 493C (20 U.S.C. 1098e) of the HEA authorizes income based repayment for part B borrowers who have a partial financial hardship. The regulations in 34 CFR 682.215(e)(2) require notifications to borrowers from the loan holders once a borrower establishes a partial financial hardship and is placed in an income based repayment (IBR) plan by the loan holder. The regulations identify information the loan holder must provide to the borrower to continue to participate in IBR plan. This is a request for an extension of the current information collection #1845–0114 since there has been no change to the collection.

Dated: August 27, 2015.

Tomakie Washington,

Acting Director, Information Collection Clearance Division, Office of the Chief Privacy Officer, Office of Management.

[FR Doc. 2015–21653 Filed 9–1–15; 8:45 am]

BILLING CODE 4000–01–P

DEPARTMENT OF ENERGY

Environmental Management Site-Specific Advisory Board, Northern New Mexico

AGENCY: Department of Energy.

ACTION: Notice of open meeting.

SUMMARY: This notice announces a meeting of the Environmental Management Site-Specific Advisory Board (EM SSAB), Northern New Mexico. The Federal Advisory Committee Act (Pub. L. 92–463, 86 Stat. 770) requires that public notice of this meeting be announced in the **Federal Register**.

DATES: Wednesday, September 30, 2015 1:00 p.m.–5:15 p.m.

ADDRESSES: Cities of Gold Conference Center, 10–A Cities of Gold Road, Pojoaque, New Mexico 87506.

FOR FURTHER INFORMATION CONTACT: Menice Santistevan, Northern New Mexico Citizens' Advisory Board (NNMCAB), 94 Cities of Gold Road, Santa Fe, NM 87506. Phone (505) 995–0393; Fax (505) 989–1752 or Email: *Menice.Santistevan@em.doe.gov.*

SUPPLEMENTARY INFORMATION:

Purpose of the Board: The purpose of the Board is to make recommendations to DOE–EM and site management in the areas of environmental restoration, waste management, and related activities.

Tentative Agenda

- Call to Order by Deputy Designated Federal Officer (DDFO)
- Welcome and Introductions
- Approval of Agenda and Meeting Minutes of July 29, 2015
- Old Business
  - Written Reports
  - Other Items
- New Business
  - Report form Nominating Committee
  - Election of Chair and Vice-Chair for Fiscal Year 2016
- Update from DDFO(s)
- Presentations
  - Pueblo de San Ildefonso Department of Environment and Cultural Preservation
  - Cultural Perspectives of the Pueblo de San Ildefonso
- Consideration and Action on Draft Recommendation(s)
- Update from Liaisons
  - Update from DOE
  - Update from Los Alamos National Laboratory
  - Update from New Mexico Environment Department
- Public Comment Period
- Wrap-Up Comments from NNMCAB Members
- Adjourn

Public Participation: The EM SSAB, Northern New Mexico, welcomes the attendance of the public at its advisory committee meetings and will make every effort to accommodate persons with physical disabilities or special needs. If you require special accommodations due to a disability, please contact Menice Santistevan at least seven days in advance of the meeting at the telephone number listed above. Written statements may be filed with the Board either before or after the meeting. Individuals who wish to make oral statements pertaining to agenda items should contact Menice Santistevan at the address or telephone number listed above. Requests must be received five days prior to the meeting and reasonable provision will be made to include the presentation in the agenda. The Deputy Designated Federal Officer is empowered to conduct the meeting in a fashion that will facilitate the orderly conduct of business. Individuals wishing to make public comments will be provided a maximum of five minutes to present their comments.

Minutes: Minutes will be available by writing or calling Menice Santistevan at the address or phone number listed above. Minutes and other Board documents are on the Internet at: *http://www.nnmcab.energy.gov/.*

Issued at Washington, DC on August 27, 2015.

LaTanya R. Butler,

Deputy Committee Management Officer.

[FR Doc. 2015–21737 Filed 9–1–15; 8:45 am]

BILLING CODE 6450–01–P

DEPARTMENT OF ENERGY

Environmental Management Site-Specific Advisory Board, Savannah River Site

AGENCY: Department of Energy.

ACTION: Notice of open meeting.

SUMMARY: This notice announces a meeting of the Environmental Management Site-Specific Advisory Board (EM SSAB), Savannah River Site. The Federal Advisory Committee Act (Pub. L. 92–463, 86 Stat. 770) requires that public notice of this meeting be announced in the **Federal Register**.

DATES:

Monday, September 21, 2015 1:00 p.m.–5:00 p.m.

Tuesday, September 22, 2015 8:30 a.m.–4:30 p.m.

ADDRESSES: New Ellenton Community Center, 212 Pine Hill Avenue, New Ellenton, SC 29809.

FOR FURTHER INFORMATION CONTACT: de'Lisa Carrico, Office of External Affairs, Department of Energy, Savannah River Operations Office, P.O. Box A, Aiken, SC, 29802; Phone: (803) 952–8607.

SUPPLEMENTARY INFORMATION: *Purpose of the Board:* The purpose of the Board is to make recommendations to DOE–EM and site management in the areas of environmental restoration, waste management, and related activities.

Tentative Agenda

Monday, September 21, 2015

1:00 p.m. Opening and Agenda Review
1:20 p.m. Work Plan Update
1:30 p.m. Combined Committees Session

Order of committees:

- Facilities Disposition & Site Remediation
- Administrative & Outreach
- Strategic & Legacy Management
- Waste Management
- Nuclear Materials

4:45 p.m. Public Comments Session
5:00 p.m. Adjourn

Tuesday, September 22, 2015

8:30 a.m. Opening, Pledge, Chair Update, and Agenda Review
8:55 a.m. Agency Updates
10:00 a.m. Public Comment
10:15 a.m. Break
10:30 a.m. Waste Management Committee Report
11:15 a.m. Administrative & Outreach Committee Report
11:30 a.m. Public Comment
11:45 a.m. Lunch Break
1:15 p.m. Facilities Disposition & Site Remediation Committee Report
2:15 p.m. Break
2:30 p.m. Nuclear Materials Committee Report
3:15 p.m. Strategic & Legacy Management Committee Report
4:15 p.m. Public Comment
4:30 p.m. Adjourn

Public Participation: The EM SSAB, Savannah River Site, welcomes the attendance of the public at its advisory committee meetings and will make every effort to accommodate persons with physical disabilities or special needs. If you require special accommodations due to a disability, please contact de'Lisa Carrico at least seven days in advance of the meeting at the phone number listed above. Written statements may be filed with the Board either before or after the meeting. Individuals who wish to make oral statements pertaining to agenda items should contact de'Lisa Carrico's office at the address or telephone listed above. Requests must be received five days prior to the meeting and reasonable provision will be made to include the presentation in the agenda. The Deputy Designated Federal Officer is empowered to conduct the meeting in a fashion that will facilitate the orderly conduct of business. Individuals wishing to make public comments will be provided a maximum of five minutes to present their comments.

Minutes: Minutes will be available by writing or calling de'Lisa Carrico at the address or phone number listed above. Minutes will also be available at the following Web site: *http://cab.srs.gov/srs-cab.html.*

Issued at Washington, DC on August 26, 2015.

LaTanya R. Butler,

Deputy Committee Management Officer.

[FR Doc. 2015–21734 Filed 9–1–15; 8:45 am]

BILLING CODE 6450–01–P

DEPARTMENT OF ENERGY

Federal Energy Regulatory Commission

[Beverly Lock and Dam Water Power, Project No. 13404–002; Devola Lock and Dam Water Power Project, Project No. 13405–002; Malta/McConnelsville Lock and Dam Water Power Project, Project No. 13406–002; Lowell Lock and Dam Water Power Project, Project No. 13407–002; Philo Lock and Dam Water Power Project, Project No. 13408–002; Rokeby Lock and Dam Water Power Project, Project No. 13411–002]

Notice of Availability of Environmental Assessment

In accordance with the National Environmental Policy Act of 1969 and the Federal Energy Regulatory Commission's (Commission or FERC) regulations, 18 Code of Federal Regulations Part 380, the Office of Energy Projects has reviewed the applications for original licenses for the Beverly Lock and Dam Water Power Project (FERC Project No. 13404–002), Devola Lock and Dam Water Power Project (FERC Project No. 13405–002), Malta/McConnelsville Lock and Dam Water Power Project (FERC Project No. 13406–002), Lowell Lock and Dam Water Power Project (FERC Project No. 13407–002), Philo Lock and Dam Water Power Project (FERC Project No. 13408–002), and Rokeby Lock and Dam Water Power Project (FERC Project No. 13411–002). The proposed projects would be located on the Muskingum River in Ohio. The Philo Lock and Dam Water Power Project would be located north of Philo, Ohio, in Muskingum County at river mile (RM) 68.3. The Rokeby Lock and Dam Water Power Project would be located in Rokeby, Ohio, in Morgan and Muskingum Counties at RM 57.4. The Malta/McConnelsville Lock and Dam Water Power Project would be located in McConnelsville, Ohio, in Morgan County at RM 49.4. The Beverly Lock and Dam Water Power Project would be located upstream of Beverly, Ohio, in Washington and Morgan Counties at RM 25.1. The Lowell Lock and Dam Water Power Project would be located west of Lowell, Ohio, in Washington County at RM 14.2. The Devola Lock and Dam Water Power Project would be located near Devola, Ohio, in Washington County at RM 5.8. The projects would be located at existing dams owned by the Ohio Department of Natural Resources. The projects would not occupy federal land.

Staff prepared a multi-project environmental assessment (EA) in cooperation with the U.S. Army Corps of Engineers, which analyzes the potential environmental effects of licensing the six projects, and concludes that licensing the projects, with appropriate environmental protection measures, would not constitute a major federal action that would significantly affect the quality of the human environment.

A copy of the EA is available for review at the Commission in the Public Reference Room or may be viewed on the Commission's Web site at *www.ferc.gov* using the ''eLibrary'' link. Enter the docket number, excluding the last three digits, in the docket number field to access the document. For assistance, contact FERC Online Support at *FERCOnlineSupport@ferc.gov* or toll-free at 1–866–208–3676, or for TTY, (202) 502–8659.

You may also register online at *http://www.ferc.gov/docs-filing/esubscription.asp* to be notified via email of new filings and issuances related to these or other pending projects. For assistance, contact FERC Online Support.

Any comments should be filed within 30 days from the date of this notice. The Commission strongly encourages electronic filing. Please file comments using the Commission's eFiling system at *http://www.ferc.gov/docs-filing/efiling.asp.* For assistance, please contact FERC Online Support at *FERCOnlineSupport@ferc.gov* or toll-free at 1–866–208–3676, or for TTY, 202–502–8659. In lieu of electronic filing, please send a paper copy to: Secretary, Federal Energy Regulatory Commission, 888 First Street NE., Washington, DC 20426. The first page of any filing should include: ''Beverly Lock and Dam Water Power Project No. 13404–002, Devola Lock and Dam Water Power Project No. 13405–002, Malta/McConnelsville Lock and Dam Water Power Project No. 13406–002, Lowell Lock and Dam Water Power Project No. 13407–002, Philo Lock and Dam Water Power Project No. 13408–002, and/or Rokeby Lock and Dam Water Power Project No. 13411–002'' as appropriate, to the first page of any comments.

For further information, contact Aaron Liberty at (202) 502–6862, or by email at *aaron.liberty@ferc.gov.*

Dated: August 27, 2015.

Kimberly D. Bose,

Secretary.

[FR Doc. 2015–21714 Filed 9–1–15; 8:45 am]

BILLING CODE 6717–01–P

DEPARTMENT OF ENERGY

Federal Energy Regulatory Commission

Combined Notice of Filings

Take notice that the Commission has received the following Natural Gas Pipeline Rate and Refund Report filings:

Filings Instituting Proceedings

Docket Numbers: PR15–41–000.

Applicants: ETC KR Pipeline LLC

Description: Submits tariff filing per 284.123(e) + (g): ETC KR Pipeline LLC General Terms and Conditions to be effective 8/1/2015; Filing Type: 1280.

Filed Date: 8/18/15.

Accession Number: 20150818–5040.

Comments Due: 5 p.m. ET 9/8/15.

284.123(g) Protests Due: 5 p.m. ET 10/19/15.

Docket Numbers: RP15–1204–000.

Applicants: DBM Pipeline, LLC.

Description: Compliance filing Compliance Baseline Tariff Riling to be effective 10/1/2015.

Filed Date: 8/24/15.

Accession Number: 20150824–5240.

Comments Due: 5 p.m. ET 9/8/15.

The filings are accessible in the Commission's eLibrary system by clicking on the links or querying the docket number.

Any person desiring to intervene or protest in any of the above proceedings must file in accordance with Rules 211 and 214 of the Commission's Regulations (18 CFR 385.211 and 385.214) on or before 5:00 p.m. Eastern time on the specified date(s). Protests may be considered, but intervention is necessary to become a party to the proceeding.

eFiling is encouraged. More detailed information relating to filing requirements, interventions, protests, service, and qualifying facilities filings can be found at: *http://www.ferc.gov/docs-filing/efiling/filing-req.pdf.* For other information, call (866) 208–3676 (toll free). For TTY, call (202) 502–8659.

Dated: August 25, 2015.

Nathaniel J. Davis, Sr.,

Deputy Secretary.

[FR Doc. 2015–21678 Filed 9–1–15; 8:45 am]

BILLING CODE 6717–01–P

DEPARTMENT OF ENERGY

Federal Energy Regulatory Commission

[Docket No. EL15–94–000]

Shell Energy North America (US) L.P. v. California Independent System Operator Corporation; Notice of Complaint

Take notice that on August 24, 2015, pursuant to sections 306 and 206 of the Federal Power Act, 16 U.S.C. 824e, 825e (2012), and section 206 of the Rules of Practice and Procedure of the Federal Energy Regulatory Commission's (Commission), 18 CFR 385.206 (2013), Shell Energy North America (US) L.P. (Complainant) filed a formal complaint against California Independent System Operator Corporation (CAISO or Respondent) requesting that the Commission issue an order requiring CAISO to correct Shell Energy's settlement statement for trade month August 2010 and refund improper charges caused by CAISO's unilateral error. Complainant alleged that the Respondent's Section 11.29.8.4.6 of the Tariff is unjust and unreasonable as more fully explained in the complaint.

The Complainant states that copies of the Section 306 and 206 Complaints were served on representatives of the Respondent.

Any person desiring to intervene or to protest this filing must file in accordance with Rules 211 and 214 of the Commission's Rules of Practice and Procedure (18 CFR 385.211, 385.214). Protests will be considered by the Commission in determining the appropriate action to be taken, but will not serve to make protestants parties to the proceeding. Any person wishing to become a party must file a notice of intervention or motion to intervene, as appropriate. The Respondent's answer and all interventions, or protests must be filed on or before the comment date. The Respondent's answer, motions to intervene, and protests must be served on the Complainants.

The Commission encourages electronic submission of protests and interventions in lieu of paper using the ''eFiling'' link at *http://www.ferc.gov.* Persons unable to file electronically should submit an original and 14 copies of the protest or intervention to the Federal Energy Regulatory Commission, 888 First Street NE., Washington, DC 20426.

This filing is accessible on-line at *http://www.ferc.gov,* using the ''eLibrary'' link and is available for review in the Commission's Public Reference Room in Washington, DC. There is an ''eSubscription'' link on the Web site that enables subscribers to receive email notification when a document is added to a subscribed docket(s). For assistance with any FERC Online service, please email *FERCOnlineSupport@ferc.gov,* or call (866) 208–3676 (toll free). For TTY, call (202) 502–8659.

Comment Date: 5:00 p.m. Eastern Time on September 25, 2015.

Dated: August 26, 2015.

Nathaniel J. Davis, Sr.,

Deputy Secretary.

[FR Doc. 2015–21751 Filed 9–1–15; 8:45 am]

BILLING CODE 6717–01–P

DEPARTMENT OF ENERGY

Federal Energy Regulatory Commission

[Docket No. ER15–2530–000]

Censtar Operating Company, LLC; Supplemental Notice That Initial Market-Based Rate Filing Includes Request for Blanket Section 204 Authorization

This is a supplemental notice in the above-referenced proceeding of Censtar Operating Company, LLC's application for market-based rate authority, with an accompanying rate tariff, noting that such application includes a request for blanket authorization, under 18 CFR

part 34, of future issuances of securities and assumptions of liability.

Any person desiring to intervene or to protest should file with the Federal Energy Regulatory Commission, 888 First Street NE., Washington, DC 20426, in accordance with Rules 211 and 214 of the Commission's Rules of Practice and Procedure (18 CFR 385.211 and 385.214). Anyone filing a motion to intervene or protest must serve a copy of that document on the Applicant.

Notice is hereby given that the deadline for filing protests with regard to the applicant's request for blanket authorization, under 18 CFR part 34, of future issuances of securities and assumptions of liability, is September 16, 2015.

The Commission encourages electronic submission of protests and interventions in lieu of paper, using the FERC Online links at *http://www.ferc.gov.* To facilitate electronic service, persons with Internet access who will eFile a document and/or be listed as a contact for an intervenor must create and validate an eRegistration account using the eRegistration link. Select the eFiling link to log on and submit the intervention or protests.

Persons unable to file electronically should submit an original and 5 copies of the intervention or protest to the Federal Energy Regulatory Commission, 888 First Street NE., Washington, DC 20426.

The filings in the above-referenced proceeding are accessible in the Commission's eLibrary system by clicking on the appropriate link in the above list. They are also available for electronic review in the Commission's Public Reference Room in Washington, DC. There is an eSubscription link on the Web site that enables subscribers to receive email notification when a document is added to a subscribed docket(s). For assistance with any FERC Online service, please email *FERCOnlineSupport@ferc.gov.* or call (866) 208–3676 (toll free). For TTY, call (202) 502–8659.

Dated: August 27, 2015.

Kimberly D. Bose,

Secretary.

[FR Doc. 2015–21711 Filed 9–1–15; 8:45 am]

BILLING CODE 6717–01–P

DEPARTMENT OF ENERGY

Federal Energy Regulatory Commission

Combined Notice of Filings #1

Take notice that the Commission received the following electric corporate filings:

Docket Numbers: EC15–194–000.
Applicants: Aesir Power, LLC.
Description: Application of Aesir Power, LLC for Authorization Under Section 203 of the Federal Power Act, Request for Expedited Consideration, and Request for Confidential Treatment.
Filed Date: 8/25/15.
Accession Number: 20150825–5206.
Comments Due: 5 p.m. ET 9/15/15.

Take notice that the Commission received the following electric rate filings:

Docket Numbers: ER10–2331–034; ER14–630–011; ER10–2319–026; ER10–2317–026; ER10–2326–032; ER14–1468–010; ER13–1351–008; ER10–2330–033.
Applicants: J.P. Morgan Ventures Energy Corporation, AlphaGen Power LLC, BE Alabama LLC, BE CA LLC, Cedar Brakes I, L.L.C. KMC Thermo, LLC, Florida Power Development LLC, Utility Contract Funding, L.L.C.
Description: Non-Material Change in Status of the J.P. Morgan Sellers.
Filed Date: 8/25/15.
Accession Number: 20150825–5203.
Comments Due: 5 p.m. ET 9/15/15.

Docket Numbers: ER11–1933–005.
Applicants: Green Mountain Power Corporation.
Description: Supplement to March 17, 2015 Non-Material Change-in-Status Report of Green Mountain Power Corporation.
Filed Date: 8/25/15.
Accession Number: 20150825–5201.
Comments Due: 5 p.m. ET 9/15/15.
Docket Numbers: ER15–2525–000.
Applicants: The Dayton Power and Light Company.
Description: Section 205(d) Rate Filing: FERC Rate Schedule No. 307, Local Delivery Service Agreement with Buckeye to be effective 8/25/2015.
Filed Date: 8/26/15.
Accession Number: 20150826–5063.
Comments Due: 5 p.m. ET 9/16/15.

Docket Numbers: ER15–2526–000.
Applicants: Kentucky Utilities Company.
Description: Section 205(d) Rate Filing: Revised KU Muni Contracts for CR7 Depreciation Rates to be effective 6/19/2015.
Filed Date: 8/26/15.
Accession Number: 20150826–5125.
Comments Due: 5 p.m. ET 9/16/15.

Docket Numbers: ER15–2527–000.
Applicants: Oasis Power, LLC.
Description: Baseline eTariff Filing: Application for MBR to be effective 8/27/2015.
Filed Date: 8/26/15.
Accession Number: 20150826–5127.
Comments Due: 5 p.m. ET 9/16/15.

Docket Numbers: ER15–2528–000.
Applicants: Spark Energy, L.P.
Description: Section 205(d) Rate Filing: Notice of Succession to be effective 8/27/2015.
Filed Date: 8/26/15.
Accession Number: 20150826–5128.
Comments Due: 5 p.m. ET 9/16/15.

Docket Numbers: ER15–2529–000.
Applicants: Censtar Energy Corp.
Description: Compliance filing: Application for MBR to be effective 8/27/2015.
Filed Date: 8/26/15.
Accession Number: 20150826–5129.
Comments Due: 5 p.m. ET 9/16/15.

Docket Numbers: ER15–2530–000.
Applicants: Censtar Operating Company, LLC.
Description: Baseline eTariff Filing: Application for MBR to be effective 8/27/2015.
Filed Date: 8/26/15.
Accession Number: 20150826–5130.
Comments Due: 5 p.m. ET 9/16/15.

The filings are accessible in the Commission's eLibrary system by clicking on the links or querying the docket number.

Any person desiring to intervene or protest in any of the above proceedings must file in accordance with Rules 211 and 214 of the Commission's Regulations (18 CFR 385.211 and 385.214) on or before 5:00 p.m. Eastern time on the specified comment date. Protests may be considered, but intervention is necessary to become a party to the proceeding.

eFiling is encouraged. More detailed information relating to filing requirements, interventions, protests, service, and qualifying facilities filings can be found at: *http://www.ferc.gov/docs-filing/efiling/filing-req.pdf.* For other information, call (866) 208–3676 (toll free). For TTY, call (202) 502–8659.

Dated: August 26, 2015.

Nathaniel J. Davis, Sr.,

Deputy Secretary.

[FR Doc. 2015–21749 Filed 9–1–15; 8:45 am]

BILLING CODE 6717–01–P

DEPARTMENT OF ENERGY

Federal Energy Regulatory Commission

[Docket No. ER15–2529–000]

Censtar Energy Corp.; Supplemental Notice that Initial Market-Based Rate Filing Includes Request for Blanket Section 204 Authorization

This is a supplemental notice in the above-referenced proceeding of Censtar Energy Corp.'s application for market-based rate authority, with an accompanying rate tariff, noting that such application includes a request for blanket authorization, under 18 CFR part 34, of future issuances of securities and assumptions of liability.

Any person desiring to intervene or to protest should file with the Federal Energy Regulatory Commission, 888 First Street NE., Washington, DC 20426, in accordance with Rules 211 and 214 of the Commission's Rules of Practice and Procedure (18 CFR 385.211 and 385.214). Anyone filing a motion to intervene or protest must serve a copy of that document on the Applicant.

Notice is hereby given that the deadline for filing protests with regard to the applicant's request for blanket authorization, under 18 CFR part 34, of future issuances of securities and assumptions of liability, is September 16, 2015.

The Commission encourages electronic submission of protests and interventions in lieu of paper, using the FERC Online links at *http://www.ferc.gov.* To facilitate electronic service, persons with Internet access who will eFile a document and/or be listed as a contact for an intervenor must create and validate an eRegistration account using the eRegistration link. Select the eFiling link to log on and submit the intervention or protests.

Persons unable to file electronically should submit an original and 5 copies of the intervention or protest to the Federal Energy Regulatory Commission, 888 First Street NE., Washington, DC 20426.

The filings in the above-referenced proceeding are accessible in the Commission's eLibrary system by clicking on the appropriate link in the above list. They are also available for electronic review in the Commission's Public Reference Room in Washington, DC. There is an eSubscription link on the Web site that enables subscribers to receive email notification when a document is added to a subscribed docket(s). For assistance with any FERC Online service, please email *FERCOnlineSupport@ferc.gov.* or call (866) 208–3676 (toll free). For TTY, call (202) 502–8659.

Dated: August 27, 2015.

Kimberly D. Bose,

Secretary.

[FR Doc. 2015–21710 Filed 9–1–15; 8:45 am]

BILLING CODE 6717–01–P

DEPARTMENT OF ENERGY

Federal Energy Regulatory Commission

Combined Notice of Filings #2

Take notice that the Commission received the following electric rate filings:

Docket Numbers: ER15–2078–001.
Applicants: Talen Energy Marketing, LLC.
Description: Tariff Amendment: Amendment to Notice of Succession to Reactive Tariff to be effective 6/30/2015.
Filed Date: 8/26/15.
Accession Number: 20150826–5179.
Comments Due: 5 p.m. ET 9/16/15.

Docket Numbers: ER15–2531–000.
Applicants: Southwest Power Pool, Inc.
Description: Section 205(d) Rate Filing: 2179 Sunflower to ITC Great Plains Novation Cancellation to be effective 8/10/2015.
Filed Date: 8/26/15.
Accession Number: 20150826–5135.
Comments Due: 5 p.m. ET 9/16/15.

Docket Numbers: ER15–2532–000.
Applicants: Southwest Power Pool, Inc.
Description: Section 205(d) Rate Filing: 2180 Mid-Kansas to ITC Great Plains Novation Cancellation to be effective 8/10/2015.
Filed Date: 8/26/15.
Accession Number: 20150826–5136.
Comments Due: 5 p.m. ET 9/16/15.

Docket Numbers: ER15–2533–000.
Applicants: Midcontinent Independent System Operator, Inc.
Description: Section 205(d) Rate Filing: 2015–08–26_SA 2831 ITCTransmission-Geronimo Huron Wind GIA (J340) to be effective 10/25/2015.
Filed Date: 8/26/15.
Accession Number: 20150826–5190.
Comments Due: 5 p.m. ET 9/16/15.

The filings are accessible in the Commission's eLibrary system by clicking on the links or querying the docket number.

Any person desiring to intervene or protest in any of the above proceedings must file in accordance with Rules 211 and 214 of the Commission's Regulations (18 CFR 385.211 and 385.214) on or before 5:00 p.m. Eastern time on the specified comment date. Protests may be considered, but intervention is necessary to become a party to the proceeding.

eFiling is encouraged. More detailed information relating to filing requirements, interventions, protests, service, and qualifying facilities filings can be found at: *http://www.ferc.gov/docs-filing/efiling/filing-req.pdf.* For other information, call (866) 208–3676 (toll free). For TTY, call (202) 502–8659.

Dated: August 26, 2015.

Nathaniel J. Davis, Sr.,

Deputy Secretary.

[FR Doc. 2015–21750 Filed 9–1–15; 8:45 am]

BILLING CODE 6717–01–P

DEPARTMENT OF ENERGY

Federal Energy Regulatory Commission

Notice of Application for Amendment of Licenses To Incorporate Interim Fish Passage Plan and Soliciting Comments, Motions To Intervene and Protests

Brookfield White Pine Hydro, LLC	Project No. 2322–054
	Project No. 2325–077
Merimil Limited Partnership	Project No. 2574–069
	Project No. 2574–075

Take notice that the following hydroelectric application has been filed with the Commission and is available for public inspection:

a. *Application Type:* Amendment of Licenses.

b. *Project Nos:* 2322–054, 2325–077, and 2574–069, 2574–075.

c. *Date Filed:* February 21, 2013 and March 29, 2013.

d. *Applicant:* Brookfield White Pine Hydro, LLC and Merimil Limited Partnership.

e. *Name of Projects:* Shawmut, Weston, and Lockwood Projects.

f. *Location:* The Shawmut, Weston, and Lockwood Projects are located on the Kennebec River at river miles 66, 82 and 63, respectively, in Kennebec and Somerset counties, Maine.

g. *Filed Pursuant to:* Federal Power Act, 16 U.S.C. 791a–825r.

h. *Applicant Contact:* Kevin Bernier, 26 Katherine Dr. Hallowell, ME 04347, (207) 723–4341.

i. *FERC Contact:* Mr. Mark Pawlowski (202) 502–6052, *mark.pawlowski@ferc.gov.*

j. *Deadline for filing comments, motions to intervene, and protests:* September 26, 2015.

All documents may be filed electronically via the Internet. See, 18 CFR 385.2001(a)(1)(iii) and the instructions on the Commission's Web site at *http://www.ferc.gov/docs-filing/efiling.asp.* If unable to be filed electronically, documents may be paper-filed. To paper-file, an original and seven copies should be mailed to: Secretary, Federal Energy Regulatory Commission, 888 First Street NE., Washington, DC 20426. Commenters can submit brief comments up to 6,000 characters, without prior registration, using the eComment system at *http://www.ferc.gov/docs-filing/ecomment.asp.* You must include your name and contact information at the end of your comments.

Please include the project numbers (P–2322, P–2325, and P–2574, as needed) on any comments, motions, or recommendations filed.

k. *Description of Request:* Brookfield White Pine Hydro LLC, licensee for the Shawmut (P–2322) and Weston Projects (P–2325), and Merimil Limited Partnership, licensee for the Lockwood Project (P–2574), request Commission approval to amend the licenses for these projects to incorporate the provisions of an Interim Species Protection Plan (ISPP) for Atlantic salmon. Under the proposed ISPP, the licensees would identify and conduct studies of existing upstream and downstream fish passage facilities used for Atlantic salmon with the goal of identifying potential enhancement measures to improve fish passage facilities at the above projects. In addition, the proposed ISPP includes an addendum with handling procedures to protect Atlantic and shortnose sturgeon at the Lockwood Project (P–2325).

l. *Locations of the Application:* A copy of each application is available for inspection and reproduction at the Commission's Public Reference Room, located at 888 First Street NE., Room 2A, Washington, DC 20426, or by calling 202–502–8371. These filings may also be viewed on the Commission's Web site at *http://www.ferc.gov* using the ''eLibrary'' link. Enter the docket number excluding the last three digits in the docket number field to access the document. You may also register online at *http://www.ferc.gov/docs-filing/esubscription.asp* to be notified via email of new filings and issuances related to this or other pending projects. For assistance, call 866–208–3676 or email *FERCOnlineSupport@ferc.gov,* for TTY, call 202–502–8659. A copy is also available for inspection and reproduction at the address in item (h) above.

m. Individuals desiring to be included on the Commission's mailing list should so indicate by writing to the Secretary of the Commission.

n. *Comments, Protests, or Motions to Intervene:* Anyone may submit comments, a protest, or a motion to intervene in accordance with the requirements of Rules of Practice and Procedure, 18 CFR 385.210, .211, .214. In determining the appropriate action to take, the Commission will consider all protests or other comments filed, but only those who file a motion to intervene in accordance with the Commission's Rules may become a party to the proceeding. Any comments, protests, or motions to intervene must be received on or before the specified comment date for the particular application.

o. *Filing and Service of Responsive Documents:* Any filing must (1) bear in all capital letters the title ''COMMENTS'', ''PROTESTS'', or ''MOTION TO INTERVENE'' as applicable; (2) set forth in the heading the name of the applicant and the project number of the application to which the filing responds; (3) furnish the name, address, and telephone number of the person protesting or intervening; and (4) otherwise comply with the requirements of 18 CFR 385.2001 through 385.2005. All comments, motions to intervene, or protests must set forth their evidentiary basis and otherwise comply with the requirements of 18 CFR 4.34(b). Agencies may obtain copies of the application directly from the applicant. A copy of any protest or motion to intervene must be served upon each representative of the applicant specified in the particular application. If an intervener files comments or documents with the Commission relating to the merits of an issue that may affect the responsibilities of a particular resource agency, they must also serve a copy of the document on that resource agency. A copy of all other filings in reference to this application must be accompanied by proof of service on all persons listed in the service list prepared by the Commission in this proceeding, in accordance with 18 CFR 4.34(b) and 385.2010.

Dated: August 27, 2015.

Kimberly D. Bose,

Secretary.

[FR Doc. 2015–21712 Filed 9–1–15; 8:45 am]

BILLING CODE 6717–01–P

DEPARTMENT OF ENERGY

Federal Energy Regulatory Commission

Combined Notice of Filings #1

Take notice that the Commission received the following electric corporate filings:

Docket Numbers: EC15–174–000.

Applicants: Biofuels Washington, LLC.

Description: Supplement to July 22, 2015 Application Under FPA Section 203 of Biofuels Washington, LLC.

Filed Date: 8/27/15.

Accession Number: 20150827–5041.

Comments Due: 5 p.m. ET 9/8/15.

Take notice that the Commission received the following electric rate filings:

Docket Numbers: ER10–2743–006; ER12–637–004; ER12–995–004; ER10–1892–006; ER10–1886–006; ER10–2793–006; ER10–2755–007; ER10–2739–010; ER10–1872–006; ER10–1859–006.

Applicants: Bluegrass Generation Company, L.L.C., Calhoun Power Company, LLC, Cherokee County Cogeneration Partners, LLC, Columbia Energy LLC, Decatur Energy Center, LLC, DeSoto County Generating Company, LLC, Las Vegas Power Company, LLC, Mobile Energy L L C, Santa Rosa Energy Center, LLC, LS Power Marketing, LLC.

Description: Supplement to December 29, 2014 Updated Market Power Analysis in Southeast Region of the LS Power Development, LLC subsidiaries.

Filed Date: 8/26/15.

Accession Number: 20150826–5236.

Comments Due: 5 p.m. ET 9/16/15.

Docket Numbers: ER15–33–001.

Applicants: The Dayton Power and Light Company.

Description: Compliance filing: FERC Rate Schedule No. 303, Village of Lakeview to be effective 1/1/2015.

Filed Date: 8/27/15.

Accession Number: 20150827–5236.

Comments Due: 5 p.m. ET 9/17/15.

Docket Numbers: ER15–553–000.

Applicants: San Diego Gas & Electric Company.

Description: Response to August 21, 2015 Deficiency Letter including Pro Forma tariff sheet of San Diego Gas & Electric Company.
Filed Date: 8/26/15.
Accession Number: 20150826–5241.
Comments Due: 5 p.m. ET 9/16/15.

Docket Numbers: ER15–1193–002.
Applicants: PJM Interconnection, L.L.C.
Description: Compliance filing: Compliance Filing per 8/4/15 Order in Docket No. ER15–1193–001 to be effective 5/1/2015.
Filed Date: 8/27/15.
Accession Number: 20150827–5226.
Comments Due: 5 p.m. ET 9/17/15.

Docket Numbers: ER15–2534–000.
Applicants: Saddleback Ridge Wind, LLC/Patriot Rene.
Description: Baseline eTariff Filing: Application for Market-Based Rate Tariff to be effective 9/14/2015.
Filed Date: 8/26/15.
Accession Number: 20150826–5212.
Comments Due: 5 p.m. ET 9/16/15.

Docket Numbers: ER15–2535–000.
Applicants: Midwest Electric Power, Inc.
Description: Baseline eTariff Filing: Application for Market-Based Rate Authorization to be effective 8/28/2015.
Filed Date: 8/27/15.
Accession Number: 20150827–5110.
Comments Due: 5 p.m. ET 9/17/15.

Docket Numbers: ER15–2536–000.
Applicants: TransAlta Centralia Generation LLC.
Description: Section 205(d) Rate Filing: Revisions to Market-Based Rate Tariff to be effective 10/27/2015.
Filed Date: 8/27/15.
Accession Number: 20150827–5146.
Comments Due: 5 p.m. ET 9/17/15.

Docket Numbers: ER15–2537–000.
Applicants: TransAlta Energy Marketing (U.S.) Inc.
Description: Section 205(d) Rate Filing: Revisions to Market-Based Rate Tariff to be effective 10/27/2015.
Filed Date: 8/27/15.
Accession Number: 20150827–5147.
Comments Due: 5 p.m. ET 9/17/15.

Docket Numbers: ER15–2538–000.
Applicants: TransAlta Energy Marketing Corporation.
Description: Section 205(d) Rate Filing: Revisions to Market-Based Rate Tariff to be effective 10/27/2015.
Filed Date: 8/27/15.
Accession Number: 20150827–5148.
Comments Due: 5 p.m. ET 9/17/15.

Docket Numbers: ER15–2539–000.
Applicants: TransAlta Wyoming Wind LLC.
Description: Section 205(d) Rate Filing: Revisions to Market-Based Rate Tariff to be effective 10/27/2015.
Filed Date: 8/27/15.
Accession Number: 20150827–5149.
Comments Due: 5 p.m. ET 9/17/15.

Docket Numbers: ER15–2540–000.
Applicants: Southwest Power Pool, Inc.
Description: Section 205(d) Rate Filing: 3038 KCP&L and AECI Interconnection Agreement to be effective 8/10/2015.
Filed Date: 8/27/15.
Accession Number: 20150827–5154.
Comments Due: 5 p.m. ET 9/17/15.

Docket Numbers: ER15–2541–000.
Applicants: Burgess Capital LLC.
Description: Baseline eTariff Filing: Initial Tariff to be effective 8/27/2015.
Filed Date: 8/27/15.
Accession Number: 20150827–5158.
Comments Due: 5 p.m. ET 9/17/15.

Docket Numbers: ER15–2542–000.
Applicants: Southwest Power Pool, Inc.
Description: Section 205(d) Rate Filing: 1276R9 KCPL NITSA NOA to be effective 8/1/2015.
Filed Date: 8/27/15.
Accession Number: 20150827–5198.
Comments Due: 5 p.m. ET 9/17/15.

Docket Numbers: ER15–2543–000.
Applicants: Southwest Power Pool, Inc.
Description: Section 205(d) Rate Filing: 1636R14 Kansas Electric Power Cooperative, Inc. NITSA and NOA to be effective 8/1/2015.
Filed Date: 8/27/15.
Accession Number: 20150827–5214.
Comments Due: 5 p.m. ET 9/17/15.

Docket Numbers: ER15–2544–000.
Applicants: R.E. Ginna Nuclear Power Plant, LLC.
Description: Section 205(d) Rate Filing: 2015 normal Aug 2 to be effective 8/27/2015.
Filed Date: 8/27/15.
Accession Number: 20150827–5250.
Comments Due: 5 p.m. ET 9/17/15.

Docket Numbers: ER15–2545–000.
Applicants: PJM Interconnection, L.L.C.
Description: Tariff Cancellation: Notice of Cancellation of Service Agreement No. 3803 (Z2–027) to be effective 8/19/2015.
Filed Date: 8/27/15.
Accession Number: 20150827–5254.
Comments Due: 5 p.m. ET 9/17/15.

Docket Numbers: ER15–2546–000.
Applicants: The Dayton Power and Light Company.
Description: Section 205(d) Rate Filing: FERC Rate Schedule No. 307, Local Delivery Service Agreement with Buckeye to be effective 8/25/2015.
Filed Date: 8/27/15.
Accession Number: 20150827–5267.
Comments Due: 5 p.m. ET 9/17/15.

Take notice that the Commission received the following electric reliability filings:

Docket Numbers: RD15–6–000.
Applicants: North American Electric Reliability Corporation.
Description: Errata to Petitions of the North American Electric Reliability Corporation for Approval of Reliability Standards BAL–003–1, COM–001–2 VAR–001–4 and Implementation Plan for Reliability Standard PRC–004–4.
Filed Date: 8/25/15.
Accession Number: 20150825–5214.
Comments Due: 5 p.m. ET 9/28/15.

The filings are accessible in the Commission's eLibrary system by clicking on the links or querying the docket number.

Any person desiring to intervene or protest in any of the above proceedings must file in accordance with Rules 211 and 214 of the Commission's Regulations (18 CFR 385.211 and 385.214) on or before 5:00 p.m. Eastern time on the specified comment date. Protests may be considered, but intervention is necessary to become a party to the proceeding.

eFiling is encouraged. More detailed information relating to filing requirements, interventions, protests, service, and qualifying facilities filings can be found at: *http://www.ferc.gov/docs-filing/efiling/filing-req.pdf.* For other information, call (866) 208–3676 (toll free). For TTY, call (202) 502–8659.

Dated: August 27, 2015.

Nathaniel J. Davis, Sr.,

Deputy Secretary.

[FR Doc. 2015–21679 Filed 9–1–15; 8:45 am]

BILLING CODE 6717–01–P

DEPARTMENT OF ENERGY

Federal Energy Regulatory Commission

[Docket No. ER15–2527–000]

Oasis Power, LLC; Supplemental Notice That Initial Market-Based Rate Filing Includes Request for Blanket Section 204 Authorization

This is a supplemental notice in the above-referenced proceeding of Oasis Power, LLC's application for market-based rate authority, with an accompanying rate tariff, noting that such application includes a request for blanket authorization, under 18 CFR part 34, of future issuances of securities and assumptions of liability.

Any person desiring to intervene or to protest should file with the Federal

Energy Regulatory Commission, 888 First Street NE., Washington, DC 20426, in accordance with Rules 211 and 214 of the Commission's Rules of Practice and Procedure (18 CFR 385.211 and 385.214). Anyone filing a motion to intervene or protest must serve a copy of that document on the Applicant.

Notice is hereby given that the deadline for filing protests with regard to the applicant's request for blanket authorization, under 18 CFR part 34, of future issuances of securities and assumptions of liability, is September 16, 2015.

The Commission encourages electronic submission of protests and interventions in lieu of paper, using the FERC Online links at *http://www.ferc.gov.* To facilitate electronic service, persons with Internet access who will eFile a document and/or be listed as a contact for an intervenor must create and validate an eRegistration account using the eRegistration link. Select the eFiling link to log on and submit the intervention or protests.

Persons unable to file electronically should submit an original and 5 copies of the intervention or protest to the Federal Energy Regulatory Commission, 888 First Street NE., Washington, DC 20426.

The filings in the above-referenced proceeding are accessible in the Commission's eLibrary system by clicking on the appropriate link in the above list. They are also available for electronic review in the Commission's Public Reference Room in Washington, DC. There is an eSubscription link on the Web site that enables subscribers to receive email notification when a document is added to a subscribed docket(s). For assistance with any FERC Online service, please email *FERCOnlineSupport@ferc.gov.* or call (866) 208–3676 (toll free). For TTY, call (202) 502–8659.

Dated: August 27, 2015.

Kimberly D. Bose,

Secretary.

[FR Doc. 2015–21713 Filed 9–1–15; 8:45 am]

BILLING CODE 6717–01–P

ENVIRONMENTAL PROTECTION AGENCY

[FRL 9933–44–Region 6]

Notice of Proposed Administrative Settlement Pursuant to the Comprehensive Environmental Response, Compensation, and Liability Act

AGENCY: Environmental Protection Agency.

ACTION: Notice; request for public comment.

SUMMARY: In accordance with Section 122(i) of the Comprehensive Environmental Response, Compensation, and Liability Act, as amended (''CERCLA''), 42 U.S.C. 9622(i), notice is hereby given of a proposed administrative settlement concerning the Malone Service Company Superfund Site (''Site''), Texas City, Galveston County, Texas.

This Settlement requires the three (3) settling parties to pay a total of $535,273 as payment of response costs to the Hazardous Substances Superfund. The settlement includes a covenant not to sue pursuant to section 107 of CERCLA, 42 U.S.C. 9607.

For thirty (30) days following the date of publication of this notice, the Agency will receive written comments relating to this notice and will receive written comments relating to the settlement. The Agency will consider all comments received and may modify or withdraw its consent to the settlement if comments received disclose facts or considerations which indicate that the settlement is inappropriate, improper, or inadequate. The Agency's response to any comments received will be available for public inspection at 1445 Ross Avenue, Dallas, Texas 75202–2733.

DATES: Comments must be submitted on or before October 2, 2015.

ADDRESSES: The proposed settlement and additional background information relating to the settlement are available for public inspection at 1445 Ross Avenue, Dallas, Texas 75202–2733. A copy of the proposed settlement may be obtained from Cynthia Brown at 1445 Ross Avenue, Dallas, Texas 75202–2733 or by calling (214) 665–7480. Comments should reference the Malone Service Company, Superfund Site, Texas City, Galveston County, Texas, and EPA Docket Number 06–05–14, and should be addressed to Cynthia Brown at the address listed above.

FOR FURTHER INFORMATION CONTACT: I-Jung Chiang, Assistant Regional Counsel, 1445 Ross Avenue, Dallas, Texas 75202–2733 or call (214) 665–2160.

Dated: August 25, 2015.

Ronald Curry,

Regional Administrator, Region 6.

[FR Doc. 2015–21793 Filed 9–1–15; 8:45 am]

BILLING CODE 6560–50–P

ENVIRONMENTAL PROTECTION AGENCY

[EPA–HQ–OPPT–2015–0273; FRL–9931–70]

Agency Information Collection Activities; Proposed Collection; Comment Request

AGENCY: Environmental Protection Agency (EPA).

ACTION: Notice.

SUMMARY: In compliance with the Paperwork Reduction Act (PRA), this document announces that EPA is planning to submit an Information Collection Request (ICR) to the Office of Management and Budget (OMB). The ICR, entitled: ''TSCA Section 5(a)(2) Significant New Use Rules for Existing Chemicals'' and identified by EPA ICR No. 1188.12 and OMB Control No. 2070–0038, represents the renewal of an existing ICR that is scheduled to expire on July 31, 2016. Before submitting the ICR to OMB for review and approval, EPA is soliciting comments on specific aspects of the proposed information collection that is summarized in this document. The ICR and accompanying material are available in the docket for public review and comment.

DATES: Comments must be received on or before November 2, 2015.

ADDRESSES: Submit your comments, identified by docket identification (ID) number EPA–HQ–OPPT–2015–0273, by one of the following methods:

- *Federal eRulemaking Portal: http://www.regulations.gov.* Follow the online instructions for submitting comments. Do not submit electronically any information you consider to be Confidential Business Information (CBI) or other information whose disclosure is restricted by statute.
- *Mail:* Document Control Office (7407M), Office of Pollution Prevention and Toxics (OPPT), Environmental Protection Agency, 1200 Pennsylvania Ave. NW., Washington, DC 20460–0001.
- *Hand Delivery:* To make special arrangements for hand delivery or delivery of boxed information, please follow the instructions at *http://www.epa.gov/dockets/contacts.html.*

Additional instructions on commenting or visiting the docket, along with more information about

dockets generally, is available at *http://www.epa.gov/dockets.*

FOR FURTHER INFORMATION CONTACT: *For technical information contact:* Jeffrey Taylor, Chemical Control Division (7405–M), Office of Pollution Prevention and Toxics, Environmental Protection Agency, 1200 Pennsylvania Ave. NW., Washington, DC 20460–0001; telephone number: (202) 564–8828; email address: *taylor.jeffrey@epa.gov.*

For general information contact: The TSCA-Hotline, ABVI-Goodwill, 422 South Clinton Ave., Rochester, NY 14620; telephone number: (202) 554–1404; email address: *TSCA-Hotline@epa.gov.*

SUPPLEMENTARY INFORMATION:

I. What information is EPA particularly interested in?

Pursuant to PRA section 3506(c)(2)(A) (44 U.S.C. 3506(c)(2)(A)), EPA specifically solicits comments and information to enable it to:

1. Evaluate whether the proposed collection of information is necessary for the proper performance of the functions of the Agency, including whether the information will have practical utility.
2. Evaluate the accuracy of the Agency's estimates of the burden of the proposed collection of information, including the validity of the methodology and assumptions used.
3. Enhance the quality, utility, and clarity of the information to be collected.
4. Minimize the burden of the collection of information on those who are to respond, including through the use of appropriate automated electronic, mechanical, or other technological collection techniques or other forms of information technology, *e.g.,* permitting electronic submission of responses. In particular, EPA is requesting comments from very small businesses (those that employ less than 25) on examples of specific additional efforts that EPA could make to reduce the paperwork burden for very small businesses affected by this collection.

II. What information collection activity or ICR does this action apply to?

Title: TSCA Section 5(a)(2) Significant New Use Rules for Existing Chemicals.

ICR number: EPA ICR No. 1188.12.

OMB control number: OMB Control No. 2070–0038.

ICR status: This ICR is currently scheduled to expire on July 31, 2016. An Agency may not conduct or sponsor, and a person is not required to respond to, a collection of information, unless it displays a currently valid OMB control number. The OMB control numbers for EPA's regulations in title 40 of the Code of Federal Regulations (CFR), after appearing in the **Federal Register** when approved, are listed in 40 CFR part 9, are displayed either by publication in the **Federal Register** or by other appropriate means, such as on the related collection instrument or form, if applicable. The display of OMB control numbers for certain EPA regulations is consolidated in 40 CFR part 9.

Abstract: Section 5 of the Toxic Substances Control Act (TSCA) provides EPA with a regulatory mechanism to monitor and, if necessary, control significant new uses of chemical substances. Section 5 authorizes EPA to determine by rule (*i.e.,* a significant new use rule or SNUR), after considering all relevant factors, that a use of a chemical substance represents a significant new use. If EPA determines that a use of a chemical substance is a significant new use, section 5 requires persons to submit a significant new use notice (SNUN) to EPA at least 90 days before they manufacture, import, or process the substance for that use.

EPA uses the information obtained through this collection to evaluate the health and environmental effects of the significant new use. EPA may take regulatory actions under TSCA section 5, 6 or 7 to control the activities for which it has received a SNUR notice. These actions include orders to limit or prohibit the manufacture, importation, processing, distribution in commerce, use or disposal of chemical substances. If EPA does not take action, section 5 also requires EPA to publish a **Federal Register** notice explaining the reasons for not taking action. This information collection addresses the reporting and recordkeeping requirements inherent in TSCA section 5 significant new use rules.

Responses to the collection of information are mandatory (see 40 CFR part 721). Respondents may claim all or part of a notice confidential. EPA will disclose information that is covered by a claim of confidentiality only to the extent permitted by, and in accordance with, the procedures in TSCA section 14 and 40 CFR part 2.

Burden statement: The annual public reporting and recordkeeping burden for this collection of information is estimated to average 16.3 hours per response. Burden is defined in 5 CFR 1320.3(b).

The ICR, which is available in the docket along with other related materials, provides a detailed explanation of the collection activities and the burden estimate that is only briefly summarized here:

Respondents/Affected Entities: Entities potentially affected by this ICR are companies that manufacture, process, import, or distribute in commerce chemical substances or mixtures.

Estimated total number of potential respondents: 6.

Frequency of response: On occasion.

Estimated total average number of responses for each respondent: 1.1.

Estimated total annual burden hours: 1,025 hours.

Estimated total annual costs: $100,595. This includes an estimated burden cost of $ 100,595 and an estimated cost of $ 0 for capital investment or maintenance and operational costs.

III. Are there changes in the estimates from the last approval?

There is a net increase of 289 hours in the total estimated respondent burden compared with that identified in the ICR currently approved by OMB. This increase reflects EPA's updating the number of affected sites (from 4.24 to 6.06 per year), the average number of SNUNs submitted annually (from 7 SNUNs to 10 SNUNS per year), recalculating the average number of chemicals per SNUR (7 chemicals to 8 chemicals), and correcting rounding errors in the burden estimate for completing a SNUN, (92.2 hours to 91.68 hours), and rule familiarization (0.83 hours to 0.82 hours). Details about these changes are found in the Supporting Statement. This change is an adjustment.

IV. What is the next step in the process for this ICR?

EPA will consider the comments received and amend the ICR as appropriate. The final ICR package will then be submitted to OMB for review and approval pursuant to 5 CFR 1320.12. EPA will issue another **Federal Register** document pursuant to 5 CFR 1320.5(a)(1)(iv) to announce the submission of the ICR to OMB and the opportunity to submit additional comments to OMB. If you have any questions about this ICR or the approval process, please contact the technical person listed under **FOR FURTHER INFORMATION CONTACT**.

Authority: 44 U.S.C. 3501 *et seq.*

Dated: August 6, 2015.

James Jones,

Assistant Administrator, Office of Chemical Safety and Pollution Prevention.

[FR Doc. 2015–21372 Filed 9–1–15; 8:45 am]

BILLING CODE 6560–50–P

FEDERAL COMMUNICATIONS COMMISSION

[OMB 3060–0357]

Information Collection Being Reviewed by the Federal Communications Commission Under Delegated Authority

AGENCY: Federal Communications Commission.

ACTION: Notice and request for comments.

SUMMARY: As part of its continuing effort to reduce paperwork burdens, and as required by the Paperwork Reduction Act (PRA) of 1995 (44 U.S.C. 3501–3520), the Federal Communications Commission (FCC or the Commission) invites the general public and other Federal agencies to take this opportunity to comment on the following information collection. Comments are requested concerning: Whether the proposed collection of information is necessary for the proper performance of the functions of the Commission, including whether the information shall have practical utility; the accuracy of the Commission's burden estimate; ways to enhance the quality, utility, and clarity of the information collected; ways to minimize the burden of the collection of information on the respondents, including the use of automated collection techniques or other forms of information technology; and ways to further reduce the information collection burden on small business concerns with fewer than 25 employees. The FCC may not conduct or sponsor a collection of information unless it displays a currently valid control number. No person shall be subject to any penalty for failing to comply with a collection of information subject to the PRA that does not display a valid Office of Management and Budget (OMB) control number.

DATES: Written PRA comments should be submitted on or before November 2, 2015. If you anticipate that you will be submitting comments, but find it difficult to do so within the period of time allowed by this notice, you should advise the contact listed below as soon as possible.

ADDRESSES: Direct all PRA comments to Cathy Williams, FCC, via email *PRA@fcc.gov* and to *Cathy.Williams@fcc.gov.*

FOR FURTHER INFORMATION CONTACT: For additional information about the information collection, contact Cathy Williams at (202) 418–2918.

SUPPLEMENTARY INFORMATION:

OMB Control No.: 3060–0357.

Title: Recognized Private Operating Agency (RPOA), 47 CFR 63.701.

Form Number: N/A.

Type of Review: Extension of a currently approved collection.

Respondents: Business or other for-profit.

Number of Respondents: 10 respondents; 10 responses.

Estimated Time per response: 2–5 hours.

Frequency of Response: On occasion reporting requirement.

Obligation To Respond: Required to obtain or retain benefits. The statutory authority for this collection is contained in 47 U.S.C. 154(j), 201, 214 and 403.

Total Annual Burden: 35 hours.

Annual Cost Burden: $18,800.

Privacy Act Impact Assessment: No impact(s).

Nature and Extent of Confidentiality: In general, there is no need for confidentiality with this collection of information.

Needs and Uses: This collection will be submitted as an extension after the 60-day comment period to the Office of Management and Budget (OMB) in order to obtain the full three-year clearance.

The Commission requests this information in order to make recommendations to the U.S. Department of State for granting recognized private operating agency (RPOA) status to requesting entities. The Commission does not require entities to request RPOA status. Rather, this is a voluntary application process for use by companies that believe that obtaining RPOA status will be beneficial in persuading foreign governments to allow them to conduct business abroad. RPOA status also permits companies to join the International Telecommunication Union's (ITU's) Telecommunications Sector, which is the standards-setting body of the ITU.

The information furnished in RPOA requests is collected pursuant to 47 CFR 63.701 of the Commission's rules. Entities submit these applications on a voluntary basis. The collection of information is a one-time collection for each respondent. Without this information collection, the Commission's policies and objectives for assisting unregulated providers of enhanced services to enter the market for international enhanced services would be thwarted.

Federal Communications Commission.

Marlene H. Dortch,

Secretary, Office of the Secretary.

[FR Doc. 2015–21764 Filed 9–1–15; 8:45 am]

BILLING CODE 6712–01–P

FEDERAL RESERVE SYSTEM

Formations of, Acquisitions by, and Mergers of Bank Holding Companies

The companies listed in this notice have applied to the Board for approval, pursuant to the Bank Holding Company Act of 1956 (12 U.S.C. 1841 *et seq.*) (BHC Act), Regulation Y (12 CFR part 225), and all other applicable statutes and regulations to become a bank holding company and/or to acquire the assets or the ownership of, control of, or the power to vote shares of a bank or bank holding company and all of the banks and nonbanking companies owned by the bank holding company, including the companies listed below.

The applications listed below, as well as other related filings required by the Board, are available for immediate inspection at the Federal Reserve Bank indicated. The applications will also be available for inspection at the offices of the Board of Governors. Interested persons may express their views in writing on the standards enumerated in the BHC Act (12 U.S.C. 1842(c)). If the proposal also involves the acquisition of a nonbanking company, the review also includes whether the acquisition of the nonbanking company complies with the standards in section 4 of the BHC Act (12 U.S.C. 1843). Unless otherwise noted, nonbanking activities will be conducted throughout the United States.

Unless otherwise noted, comments regarding each of these applications must be received at the Reserve Bank indicated or the offices of the Board of Governors not later than September 28, 2015.

A. Federal Reserve Bank of Chicago (Colette A. Fried, Assistant Vice President) 230 South LaSalle Street, Chicago, Illinois 60690–1414:

1. *Portage County Bancshares, Inc.,* Almond, Wisconsin; to acquire 100 percent of the voting shares of Bancroft State Bank, Bancroft, Wisconsin.

Board of Governors of the Federal Reserve System, August 28, 2015.

Michael J. Lewandowski,

Associate Secretary of the Board.

[FR Doc. 2015–21716 Filed 9–1–15; 8:45 am]

BILLING CODE 6210–01–P

FEDERAL RESERVE SYSTEM

Change in Bank Control Notices; Acquisitions of Shares of a Bank or Bank Holding Company

The notificants listed below have applied under the Change in Bank Control Act (12 U.S.C. 1817(j)) and § 225.41 of the Board's Regulation Y (12

CFR 225.41) to acquire shares of a bank or bank holding company. The factors that are considered in acting on the notices are set forth in paragraph 7 of the Act (12 U.S.C. 1817(j)(7)).

The notices are available for immediate inspection at the Federal Reserve Bank indicated. The notices also will be available for inspection at the offices of the Board of Governors. Interested persons may express their views in writing to the Reserve Bank indicated for that notice or to the offices of the Board of Governors. Comments must be received not later than September 17, 2015.

A. Federal Reserve Bank of Minneapolis (Jacquelyn K. Brunmeier, Assistant Vice President) 90 Hennepin Avenue, Minneapolis, Minnesota 55480–0291:

1. *Kenneth D. Brooks, Eden Prairie, Minnesota, individually and as a trustee of Signature Bancshares, Inc., Employee Stock Ownership Plan and Trust,* Minnetonka, Minnesota; to retain voting shares of Signature Bancshares, Inc., and thereby indirectly retain voting shares of Signature Bank, both in Minnetonka, Minnesota.

Board of Governors of the Federal Reserve System, August 28, 2015.

Michael J. Lewandowski,

Associate Secretary of the Board.

[FR Doc. 2015–21717 Filed 9–1–15; 8:45 am]

BILLING CODE 6210–01–P

DEPARTMENT OF HEALTH AND HUMAN SERVICES

Agency for Healthcare Research and Quality

Patient Safety Organizations: Voluntary Relinquishment From Safe Pediatric Healthcare PSO

AGENCY: Agency for Healthcare Research and Quality (AHRQ), Department of Health and Human Services (HHS).

ACTION: Notice of delisting.

SUMMARY: The Patient Safety and Quality Improvement Act of 2005, 42 U.S.C. 299b–21 to b–26, (Patient Safety Act) and the related Patient Safety and Quality Improvement Final Rule, 42 CFR part 3 (Patient Safety Rule), published in the **Federal Register** on November 21, 2008, (73 FR 70732–70814), provide for the formation of Patient Safety Organizations (PSOs), which collect, aggregate, and analyze confidential information regarding the quality and safety of health care delivery. The Patient Safety Rule authorizes AHRQ, on behalf of the Secretary of HHS, to list as a PSO an entity that attests that it meets the statutory and regulatory requirements for listing. A PSO can be ''delisted'' by the Secretary if it is found to no longer meet the requirements of the Patient Safety Act and Patient Safety Rule, when a PSO chooses to voluntarily relinquish its status as a PSO for any reason, or when a PSO's listing expires. AHRQ has accepted a notification of voluntary relinquishment from Safe Pediatric Healthcare PSO of its status as a PSO, and has delisted the PSO accordingly.

DATES: The directories for both listed and delisted PSOs are ongoing and reviewed weekly by AHRQ. The delisting was effective at 12:00 Midnight ET (2400) on August 1, 2015.

ADDRESSES: Both directories can be accessed electronically at the following HHS Web site: *http://www.pso.AHRQ.gov/listed.*

FOR FURTHER INFORMATION CONTACT: Eileen Hogan, Center for Quality Improvement and Patient Safety, AHRQ, 540 Gaither Road, Rockville, MD 20850; Telephone (toll free): (866) 403–3697; Telephone (local): (301) 427–1111; TTY (toll free): (866) 438–7231; TTY (local): (301) 427–1130; Email: *PSO@AHRQ.hhs.gov.*

SUPPLEMENTARY INFORMATION:

Background

The Patient Safety Act authorizes the listing of PSOs, which are entities or component organizations whose mission and primary activity are to conduct activities to improve patient safety and the quality of health care delivery.

HHS issued the Patient Safety Rule to implement the Patient Safety Act. AHRQ administers the provisions of the Patient Safety Act and Patient Safety Rule relating to the listing and operation of PSOs. The Patient Safety Rule authorizes AHRQ to list as a PSO an entity that attests that it meets the statutory and regulatory requirements for listing. A PSO can be ''delisted'' if it is found to no longer meet the requirements of the Patient Safety Act and Patient Safety Rule, when a PSO chooses to voluntarily relinquish its status as a PSO for any reason, or when the PSO's listing expires. Section 3.108(d) of the Patient Safety Rule requires AHRQ to provide public notice when it removes an organization from the list of federally approved PSOs.

AHRQ has accepted a notification from Safe Pediatric Healthcare PSO, a component entity of Childrens National Medical Center and Spectrum Health Hospitals dba Helen DeVos Children's Hospital, PSO number P0132, to voluntarily relinquish its status as a PSO. Accordingly, Safe Pediatric Healthcare PSO was delisted effective at 12:00 Midnight ET (2400) on August 1, 2015.

More information on PSOs can be obtained through AHRQ's PSO Web site at *http://www.pso.ahrq.gov/.*

Sharon B. Arnold,

Deputy Director.

[FR Doc. 2015–21720 Filed 9–1–15; 8:45 am]

BILLING CODE 4160–90–P

DEPARTMENT OF HEALTH AND HUMAN SERVICES

Agency for Healthcare Research and Quality

Agency Information Collection Activities: Proposed Collection; Comment Request

AGENCY: Agency for Healthcare Research and Quality, HHS.

ACTION: Notice.

SUMMARY: This notice announces the intention of the Agency for Healthcare Research and Quality (AHRQ) to request that the Office of Management and Budget (OMB) reapprove the proposed information collection project: *''Medical Expenditure Panel Survey—Insurance Component.''* In accordance with the Paperwork Reduction Act, 44 U.S.C. 3501–3521, AHRQ invites the public to comment on this proposed information collection.

This proposed information collection was previously published in the **Federal Register** on June 11th, 2015 and allowed 60 days for public comment. No comments were received. The purpose of this notice is to allow an additional 30 days for public comment.

DATES: Comments on this notice must be received by October 2, 2015.

ADDRESSES: Written comments should be submitted to: AHRQ's OMB Desk Officer by fax at (202) 395–6974 (attention: AHRQ's desk officer) or by email at *OIRA_submission@omb.eop.gov* (attention: AHRQ's desk officer).

Copies of the proposed collection plans, data collection instruments, and specific details on the estimated burden can be obtained from the AHRQ Reports Clearance Officer.

FOR FURTHER INFORMATION CONTACT: Doris Lefkowitz, AHRQ Reports Clearance Officer, (301) 427–1477, or by email at *doris.lefkowitz@AHRQ.hhs.gov.*

SUPPLEMENTARY INFORMATION:

Proposed Project

Medical Expenditure Panel Survey—Insurance Component

Employer-sponsored health insurance is the source of coverage for 79.3 million current and former workers, plus many of their family members, and is a cornerstone of the U.S. health care system. The Medical Expenditure Panel Survey—Insurance Component (MEPS–IC) measures the extent, cost, and coverage of employer-sponsored health insurance on an annual basis. These statistics are produced at the National, State, and sub-State (metropolitan area) level for private industry. Statistics are also produced for State and Local governments.

This research has the following goals:

(1) To provide data for Federal policymakers evaluating the effects of National and State health care reforms.

(2) to provide descriptive data on the current employer-sponsored health insurance system and data for modeling the differential impacts of proposed health policy initiatives.

(3) to supply critical State and National estimates of health insurance spending for the National Health Accounts and Gross Domestic Product.

(4) to support evaluation of the impact of the PPACA on health insurance offered by all employers, and especially by small employers (due to the implementation of Small Business Health Options Program (SHOP) exchanges under the PPACA), through the addition of a longitudinal component to the sample.

This study is being conducted by AHRQ through the Bureau of the Census, pursuant to AHRQ's statutory authority to conduct and support research on healthcare and on systems for the delivery of such care, including activities with respect to the quality, effectiveness, efficiency, appropriateness and value of health care services and with respect to quality measurement and improvement. 42 U.S.C. 299a(a)(1) and (2).

Method of Collection

To achieve the goals of this project the following data collections for both private sector and state and local government employers will be implemented:

(1) Prescreener Questionnaire—The purpose of the Prescreener Questionnaire, which is collected via telephone, varies depending on the insurance status of the establishment contacted (establishment is defined as a single, physical location in the private sector and a governmental unit in state and local governments.) For establishments that do not offer health insurance to their employees, the prescreener is used to collect basic information such as number of employees. Collection is completed for these establishments through this telephone call. For establishments that do offer health insurance, contact name and address information is collected that is used for the mailout of the establishment and plan questionnaires. Obtaining this contact information helps ensure that the questionnaires are directed to the person in the establishment best equipped to complete them.

(2) Establishment Questionnaire—The purpose of the mailed Establishment Questionnaire is to obtain general information from employers that provide health insurance to their employees. This information includes total active enrollment in health insurance, other employee benefits, demographic characteristics of employees, and retiree health insurance is collected through the establishment questionnaire.

(3) Plan Questionnaire—The purpose of the mailed Plan Questionnaire is to collect plan-specific information on each plan (up to four plans) offered by establishments that provide health insurance to their employees. This questionnaire obtains information on total premiums, employer and employee contributions to the premium, and plan enrollment for each type of coverage offered—single, employee-plus-one, and family—within a plan. It also asks for information on deductibles, copays, and other plan characteristics.

(4) 2016–2017 Longitudinal Sample—For 2016 and 2017, an additional sample of 7,000 employers will be included in the collection. The sample will include employers of all sizes, however 50 percent of the sample will be small employers (those with 50 or fewer employees). This sample, called the Longitudinal Sample (LS), is designed to measure the impact of the ACA on employer sponsored health insurance and especially the impact of the SHOP exchanges on small employers. The 2016 LS will consist of 7,000 private-sector employers that responded to the 2015 MEPS–IC, and the 2017 LS will consist of 7,000 private-sector employers that responded to the 2016 MEPS–IC. These employers will be surveyed again in 2016 and 2017—using the same collection methods as the regular survey—in order to track changes in their health insurance offerings, characteristics, and costs.

The primary objective of the MEPS–IC is to collect information on employer-sponsored health insurance. Such information is needed in order to provide the tools for Federal, State, and academic researchers to evaluate current and proposed health policies and to support the production of important statistical measures for other Federal agencies.

Estimated Annual Respondent Burden

The estimated annualized respondent burden hours and costs for the regular MEPS–IC and the Longitudinal Sample are presented separately below.

2016–2017 Regular MEPS–IC

Exhibit 1a shows the estimated annualized burden hours for the respondent's time to participate in the MEPS–IC. The Prescreener questionnaire will be completed by 27,606 respondents and takes about 5½ minutes to complete. The Establishment questionnaire will be completed by 23,814 respondents and takes about 23 minutes to complete. The Plan questionnaire will be completed by 21,084 respondents and will require an average of 2.2 responses per respondent. Each Plan questionnaire takes about 11 minutes to complete. The total annualized burden hours are estimated to be 19,883 hours.

Exhibit 2a shows the estimated annualized cost burden associated with the respondents' time to participate in this data collection. The annualized cost burden is estimated to be $615,380.

Exhibit 1A—Estimated Annualized Burden Hours for the 2016–2017 MEPS–IC

Form name	Number of respondents	Number of responses per respondent	Hours per response	Total burden hours
Prescreener Questionnaire	27,606	1	0.09	2,485
Establishment Questionnaire	23,814	1	*0.38	9,049

Exhibit 1A—Estimated Annualized Burden Hours for the 2016–2017 MEPS–IC—Continued

Form name	Number of respondents	Number of responses per respondent	Hours per response	Total burden hours
Plan Questionnaire	21,084	2.2	0.18	8,349
Total	72,504	na	na	19,883

*The burden estimate printed on the establishment questionnaire is 45 minutes which includes the burden estimate for completing the establishment questionnaire, an average of 2.2 plan questionnaires, plus the prescreener. The establishment and plan questionnaires are sent to the respondent as a package and are completed by the respondent at the same time.

EXHIBIT 2a—ESTIMATED ANNUALIZED COST BURDEN FOR THE 2016–2017 MEPS–IC

Form name	Number of respondents	Total burden hours	Average hourly wage rate *	Total cost burden
Prescreener Questionnaire	27,606	2,485	30.95	$76,911
Establishment Questionnaire	23,814	9,049	30.95	280,067
Plan Questionnaire	21,084	8,349	30.95	258,402
Total	72,504	19,883	na	615,380

*Based upon the mean hourly wage for Compensation, Benefits, and Job Analysis Specialists occupation code 13–1141, at *http://bls.gov/oes/current/oes131141.htm* (U.S. Department of Labor, Bureau of Labor Statistics.)

2016–2017 Longitudinal Sample

Exhibit 1b shows the estimated annualized burden hours for the respondent's time to participate in the Longitudinal Sample. The Prescreener questionnaire will be completed by 4,517 respondents and takes about 5½ minutes to complete. The Establishment questionnaire will be completed by 4,023 respondents and takes about 23 minutes to complete. The Plan questionnaire will be completed by 3,487 respondents and will require an average of 2.2 responses per respondent. Each Plan questionnaire takes about 11 minutes to complete. The total annualized burden hours are estimated to be 3,317 hours.

Exhibit 2b shows the estimated annualized cost burden associated with the respondents' time to participate in this data collection. The annualized cost burden is estimated to be $102,662.

EXHIBIT 1b—ESTIMATED ANNUALIZED BURDEN HOURS FOR THE 2016–2017 LONGITUDINAL SAMPLE

Form name	Number of respondents	Number of responses per respondent	Hours per response	Total burden hours
Prescreener Questionnaire	4,517	1	0.09	407
Establishment Questionnaire	4,023	1	*0.38	1,529
Plan Questionnaire	3,487	2.2	0.18	1,381
Total	12,027	na	na	3,317

*The burden estimate printed on the establishment questionnaire is 45 minutes which includes the burden estimate for completing the establishment questionnaire, an average of 2.2 plan questionnaires, plus the prescreener. The establishment and plan questionnaires are sent to the respondent as a package and are completed by the respondent at the same time.

EXHIBIT 2b—ESTIMATED ANNUALIZED COST BURDEN FOR THE 2016–2017 LONGITUDINAL SAMPLE

Form name	Number of respondents	Total burden hours	Average hourly wage rate *	Total cost burden
Prescreener Questionnaire	4,517	407	$30.95	$12,597
Establishment Questionnaire	4,023	1,529	30.95	47,323
Plan Questionnaire	3,487	1,381	30.95	42,742
Total	12,027	3,317	na	102,662

*Based upon the mean hourly wage for Compensation, Benefits, and Job Analysis Specialists occupation code 13–1141, at *http://bls.gov/oes/current/oes131141.htm* (U.S. Department of Labor, Bureau of Labor Statistics.)

Request for Comments

In accordance with the Paperwork Reduction Act, comments on AHRQ's information collection are requested with regard to any of the following: (a) Whether the proposed collection of information is necessary for the proper performance of AHRQ health care research and information dissemination functions, including whether the information will have practical utility; (b) the accuracy of AHRQ's estimate of burden (including hours and costs) of the proposed collection(s) of information; (c) ways to enhance the

quality, utility, and clarity of the information to be collected; and (d) ways to minimize the burden of the collection of information on respondents, including the use of automated collection techniques or other forms of information technology.

Comments submitted in response to this notice will be summarized and included in the Agency's subsequent request for OMB approval of the proposed information collection. All comments will become a matter of public record.

Sharon Arnold,

Deputy Director.

[FR Doc. 2015–21719 Filed 9–1–15; 8:45 am]

BILLING CODE 4160–90–P

DEPARTMENT OF HEALTH AND HUMAN SERVICES

Agency for Toxic Substances and Disease Registry

[Docket No. ATSDR–2015–0004]

Availability of Draft Toxicological Profile; Perfluoroalkyls

AGENCY: Agency for Toxic Substances and Disease Registry (ATSDR), Department of Health and Human Services (HHS).

ACTION: Notice of availability, and request for comment.

SUMMARY: The Agency for Toxic Substances and Disease Registry (ATSDR) located in the Department of Health and Human Services (HHS) announces the availability of the Toxicological Profile for Perfluoroalkyls for review and comment. Comments can include additional information or reports on studies about the health effects of perfluoroalkyls. Although ATSDR considered key studies for this substance during the profile development process, this **Federal Register** notice solicits any relevant, additional studies, particularly unpublished data. ATSDR will evaluate the quality and relevance of such data or studies for possible inclusion into the profile. ATSDR remains committed to providing a public comment period for this document as a means to best serve public health and our clients.

DATES: To be considered, comments on the draft Toxicological Profile for Perfluoroalkyls must be received not later than December 1, 2015. Comments received after close of the public comment period will be considered solely at the discretion of ATSDR, based upon what is deemed to be in the best interest of the general public.

ADDRESSES: You may submit comments, identified by the docket number ATSDR–2015–0004, by any of the following methods:

- Federal eRulemaking Portal: *http://www.regulations.gov/#!home.* Follow the instructions for submitting comments.
- Mail: Division of Toxicology and Human Health Sciences, 1600 Clifton Rd. NE., F57, Atlanta, GA 30329–4027.

FOR FURTHER INFORMATION CONTACT: Ms. Delores Grant, Division of Toxicology and Human Health Sciences, Agency for Toxic Substances and Disease Registry, 1600 Clifton Road NE., MS F–57, Atlanta, GA 30329; telephone number (800) 232–4636 or (770) 488–3351.

SUPPLEMENTARY INFORMATION: The Superfund Amendments and Reauthorization Act of 1986 (SARA) (42 U.S.C. 9601 *et seq.*) amended the Comprehensive Environmental Response, Compensation, and Liability Act of 1980 (CERCLA or Superfund) (42 U.S.C. 9601 *et seq.*) by establishing certain requirements for ATSDR and the U.S. Environmental Protection Agency (U.S. EPA) regarding hazardous substances that are most commonly found at facilities on the CERCLA National Priorities List (NPL). Among these statutory requirements is a mandate for the Administrator of ATSDR to prepare toxicological profiles for each substance included on the priority list of hazardous substances (also called the Substance Priority List). This list identifies 275 hazardous substances that ATSDR (in cooperation with EPA) has determined pose the most significant potential threat to human health. The availability of the revised list of the 275 priority substances was announced in the **Federal Register** on May 28, 2014 (79 FR 30613) and is available at *www.atsdr.cdc.gov/spl.*

In addition, ATSDR has the authority to prepare toxicological profiles for substances not found at sites on the National Priorities List, in an effort to ''establish and maintain inventory of literature, research, and studies on the health effects of toxic substances'' under CERCLA Section 104(i)(1)(B), to respond to requests for consultation under section 104(i)(4), and as otherwise necessary to support the site-specific response actions conducted by ATSDR.

On November 6, 2008, ATSDR announced the availability of a draft toxicological profile for Set 22 Toxicological Profiles for public comment (73 FR 66047). The Set 22 Toxicological Profiles included Perfluoroalkyls and ATSDR announced that the Perfluoroalkyls profile was on a modified schedule pending additional review.

On July 23, 2009 ATSDR published a second notice of the availability of the toxicological profile for Perfluoroalkyls in draft form for public review and comment (74 FR 36492). The 90-day comment period ended October 30, 2009. Following the close of the comment period, chemical-specific comments were addressed, and, where appropriate, changes were incorporated into the profile. Given the plethora of new data that have been published since 2009, and the resulting extensive revision to the profile, the agency has determined that it would be in the best interest of public health to release the perfluoroalkyls profile for another public comment period. The public comments and other data submitted in response to the **Federal Register** notices are available for inspection from Monday through Friday, except for legal holidays, from 9 a.m. until 5 p.m., Eastern Time, at 4770 Buford Hwy NE., Atlanta, Georgia 30341. Please call ahead to 1–800–232–4636 and ask for a representative in the Division of Toxicology and Human Health Sciences to schedule your visit.

Availability

The Toxicological Profile for Perfluoroalkyls prepared by ATSDR will be made available to the public on or about August 31, 2015 at the ATSDR Web site: *www.atsdr.cdc.gov/toxprofiles/index.asp* and at the Federal eRulemaking Portal: *http://www.regulations.gov/#!home.*

Sascha Chaney,

Director, Office of Policy, Planning and Evaluation, National Center for Environmental Health and Agency for Toxic Substances and Disease Registry.

[FR Doc. 2015–21544 Filed 9–1–15; 8:45 am]

BILLING CODE 4163–70–P

DEPARTMENT OF HEALTH AND HUMAN SERVICES

Centers for Disease Control and Prevention

[60Day–15–0214; Docket No. CDC–2015–0076]

Proposed Data Collection Submitted for Public Comment and Recommendations

AGENCY: Centers for Disease Control and Prevention (CDC), Department of Health and Human Services (HHS).

ACTION: Notice with comment period.

SUMMARY: The Centers for Disease Control and Prevention (CDC), as part of

its continuing efforts to reduce public burden and maximize the utility of government information, invites the general public and other Federal agencies to take this opportunity to comment on proposed and/or continuing information collections, as required by the Paperwork Reduction Act of 1995. This notice invites comment on the proposed revision of the National Health Interview Survey (NHIS). The annual National Health Interview Survey is a major source of general statistics on the health of the U.S. population.

DATES: Written comments must be received on or before November 2, 2015.

ADDRESSES: You may submit comments, identified by Docket No. CDC–2015–0076 by any of the following methods:

- *Federal eRulemaking Portal: Regulation.gov.* Follow the instructions for submitting comments.
- *Mail:* Leroy A. Richardson, Information Collection Review Office, Centers for Disease Control and Prevention, 1600 Clifton Road NE., MS–D74, Atlanta, Georgia 30329.

Instructions: All submissions received must include the agency name and Docket Number. All relevant comments received will be posted without change to *Regulations.gov*, including any personal information provided. For access to the docket to read background documents or comments received, go to *Regulations.gov*.

FOR FURTHER INFORMATION CONTACT: To request more information on the proposed project or to obtain a copy of the information collection plan and instruments, contact the Information Collection Review Office, Centers for Disease Control and Prevention, 1600 Clifton Road NE., MS–D74, Atlanta, Georgia 30329; phone: 404–639–7570; Email: *omb@cdc.gov.*

SUPPLEMENTARY INFORMATION: Under the Paperwork Reduction Act of 1995 (PRA) (44 U.S.C. 3501–3520), Federal agencies must obtain approval from the Office of Management and Budget (OMB) for each collection of information they conduct or sponsor. In addition, the PRA also requires Federal agencies to provide a 60–day notice in the **Federal Register** concerning each proposed collection of information, including each new proposed collection, each proposed extension of existing collection of information, and each reinstatement of previously approved information collection before submitting the collection to OMB for approval. To comply with this requirement, we are publishing this notice of a proposed data collection as described below.

Comments are invited on: (a) Whether the proposed collection of information is necessary for the proper performance of the functions of the agency, including whether the information shall have practical utility; (b) the accuracy of the agency's estimate of the burden of the proposed collection of information; (c) ways to enhance the quality, utility, and clarity of the information to be collected; (d) ways to minimize the burden of the collection of information on respondents, including through the use of automated collection techniques or other forms of information technology; and (e) estimates of capital or start-up costs and costs of operation, maintenance, and purchase of services to provide information. Burden means the total time, effort, or financial resources expended by persons to generate, maintain, retain, disclose or provide information to or for a Federal agency. This includes the time needed to review instructions; to develop, acquire, install and utilize technology and systems for the purpose of collecting, validating and verifying information, processing and maintaining information, and disclosing and providing information; to train personnel and to be able to respond to a collection of information, to search data sources, to complete and review the collection of information; and to transmit or otherwise disclose the information.

Proposed Project

National Health Interview Survey (NHIS), (OMB No. 0920–0214, expires 12/31/2017)—Revision—National Center for Health Statistics (NCHS), Centers for Disease Control and Prevention (CDC).

Background and Brief Description

Section 306 of the Public Health Service (PHS) Act (42 U.S.C. 242k), as amended, authorizes that the Secretary of Health and Human Services (DHHS), acting through NCHS, shall collect data on the extent and nature of illness and disability of the population of the United States. The annual National Health Interview Survey is a major source of general statistics on the health of the U.S. population and has been in the field continuously since 1957. Clearance is sought for three years, to collect data from 2016 to 2018. This voluntary and confidential household-based survey collects demographic and health-related information from a nationally representative sample of noninstitutionalized, civilian persons and households throughout the country. Personal identification information is requested from survey respondents to facilitate linkage of survey data with health-related administrative and other records. In 2016 the NHIS will collect information from approximately 45,000 households, which contain about 112,000 individuals.

Information is collected using computer assisted personal interviews (CAPI). A core set of data is collected each year that remains largely unchanged, whereas sponsored supplements vary from year to year. The core set includes socio-demographic characteristics, health status, health care services, and health behaviors. For 2016, supplemental questions will be cycled in pertaining to balance, blood donation, chronic pain, diabetes, and vision. Supplemental topics that continue or are enhanced from 2015 pertain to family food security, heart disease and stroke, inflammatory bowel disease, hepatitis B and C screening, children's mental health, disability and functioning, smokeless tobacco and e-cigarettes, and immunizations. Questions from 2015 on cancer control, epilepsy, and occupational health have been removed. In addition to these core and supplemental modules, a follow-back survey will be conducted on previous NHIS respondents to collect additional health related information using alternative question wording and data collection modes as a testbed for the intended 2018 redesign of the NHIS questionnaire. In addition, a subsample of NHIS respondents may be identified to participate in a pilot test to assess the feasibility of integrating wearable devices into the NHIS data collection process. The aim is to directly track health measurements, to compare those measurements to the self-reported health information provided by respondents, and to assess the role of devices in reducing respondent burden.

A new sampling strategy is being implemented in 2016 and for the foreseeable future. This new sampling design is necessitated by the prior 2006–2015 sample being exhausted, and will take into account demographic shifts in the U.S. civilian noninstitutionalized population. It will also be more flexible allowing for additions and contractions to reflect funding availability and to meet estimation goals. As in previous years, the base sample will remain at approximately 35,000 completed household interviews annually. To balance the precision of national and state-based estimates, most of the sample (approximately 25,000 completed interviews) will be allocated proportionally to the state population to maximize the precision of national-level estimates. A smaller portion of the sample (approximately 10,000

completed interviews) will be shifted to increase sample in the 10 least populous states, enabling state-level estimates of key variables to be produced for all 50 states and DC by pooling 3 years of data. This flexibility embedded in the new sampling plan reflects. Additional funding to improve state-level estimates will increase the sample by almost 10,000 completed interviews in midsize states bringing the total expected sample size in 2016 to 45,000 households.

Whereas the sampling frame for the NHIS has traditionally used field listing by the Census Bureau, in order to contain costs, the new frame will use a commercially available address list that covers residential addresses within all 50 states and the District of Columbia. Some field listing will be undertaken to improve coverage in rural areas, in high density areas, and of university housing units. This represents a substantial reduction in the number of listings performed annually.

It is anticipated that this new sampling plan will not affect estimates generated using NHIS data. To monitor the new design's performance, NHIS analysts will perform monthly checks in line with the ones currently performed as part of routine data review. NCHS receives raw data files monthly from the Census Bureau for processing and quality review. Each year, results from the January sample are compared to the previous year to determine whether the results consistent. In addition to comparing the unweighted and weighted frequencies, the input and output specifications are reviewed, and the flowcharts are compared to the skip instructions and universes for each question. If a difference is found, steps are taken to determine whether the change is legitimate or whether there is a factor other than the programming of the questionnaire such as the location or context of the question in the questionnaire. If a difference persists, the paradata are reviewed to determine whether there are changes in the mean or median time spent on that question, whether interviewers had a high rate of backing up to return to that question, and whether other questions in that battery were similarly affected. Persistent differences will be examined to determine whether there is any other interviewer effect such as results comparing newly hired and experienced interviewers and newly added primary sampling units compared to continuing primary sampling units. In addition, national estimates on the key set of indicators that are released in a quarterly report as part of the Early Release program will be monitored by NHIS analysts.

In accordance with the 1995 initiative to increase the integration of surveys within the DHHS, respondents to the NHIS serve as the sampling frame for the Medical Expenditure Panel Survey conducted by the Agency for Healthcare Research and Quality. The NHIS has long been used by government, academic, and private researchers to evaluate both general health and specific issues, such as smoking, diabetes, health care coverage, and access to health care. It is a leading source of data for the Congressionally-mandated ''Health US'' and related publications, as well as the single most important source of statistics to track progress toward the National Health Promotion and Disease Prevention Objectives, ''Healthy People 2020.''

There is no cost to the respondents other than their time.

ESTIMATED ANNUALIZED BURDEN HOURS

Type of respondent	Form name	Number of respondents	Number of responses per respondent	Average burden per response (in hours)	Total burden (in hours)
Adult Family Member	Screener Questionnaire	10,000	1	5/60	833
Adult Family Member	Family Core	45,000	1	23/60	17,250
Sample Adult	Adult Core	36,000	1	15/60	9,000
Adult Family Member	Child Core	14,000	1	10/60	2,333
Adult Family Member	Supplements	45,000	1	20/60	15,000
Adult Family Member	Followback and other Special Projects	15,000	1	20/60	5,000
Adult Family Member	Reinterview Survey	5,000	1	5/60	417
Total					49,833

Leroy A. Richardson,

Chief, Information Collection Review Office, Office of Scientific Integrity, Office of the Associate Director for Science, Office of the Director, Centers for Disease Control and Prevention.

[FR Doc. 2015–21708 Filed 9–1–15; 8:45 am]

BILLING CODE 4163–18–P

DEPARTMENT OF HEALTH AND HUMAN SERVICES

Administration for Children and Families

Submission for OMB Review; Comment Request

Title: National Youth in Transition Database and Youth Outcome Survey.

OMB No.: 0970–0340.

Description: The Foster Care Independence Act of 1999 (42 U.S.C. 1305 *et seq.*) as amended by Public Law 106–169 requires State child welfare agencies to collect and report to the Administration on Children and Families (ACF) data on the characteristics of youth receiving independent living services and information regarding their outcomes. The regulation implementing the National Youth in Transition Database, listed in 45 CFR 1356.80, contains standard data collection and reporting requirements for States to meet the law's requirements. ACF will use the information collected under the regulation to track independent living services, assess the collective outcomes of youth, and potentially to evaluate State performance with regard to those outcomes consistent with the law's mandate.

Respondents: State agencies that administer the John H. Chafee Foster Care Independence Program.

ANNUAL BURDEN ESTIMATES

Instrument	Number of respondents	Number of responses per respondent	Average burden hours per response	Total burden hours
Youth Outcome Survey	20,667	1	0.50	10,334
Data File	52	2	1,849	192,296

Estimated Total Annual Burden Hours: 202,630.

Additional Information

Copies of the proposed collection may be obtained by writing to the Administration for Children and Families, Office of Planning, Research and Evaluation, 370 L'Enfant Promenade SW., Washington, DC 20447, Attn: ACF Reports Clearance Officer. All requests should be identified by the title of the information collection. Email address: *infocollection@acf.hhs.gov.*

OMB Comment

OMB is required to make a decision concerning the collection of information between 30 and 60 days after publication of this document in the **Federal Register**. Therefore, a comment is best assured of having its full effect if OMB receives it within 30 days of publication. Written comments and recommendations for the proposed information collection should be sent directly to the following: Office of Management and Budget, Paperwork Reduction Project, Fax: 202–395–7285, Email: *OIRA_SUBMISSION@OMB.EOP.GOV.* Attn: Desk Officer for the Administration for Children and Families.

Robert Sargis,

Reports Clearance Officer.

[FR Doc. 2015–21728 Filed 9–1–15; 8:45 am]

BILLING CODE 4184–01–P

DEPARTMENT OF HEALTH AND HUMAN SERVICES

Administration for Children and Families

Submission for OMB Review; Comment Request

Title: Refugee Data Submission System for Formula Funds Allocations

OMB No.: 0970–0043.

Description: The information collection of Refugee Data Submission System for Formula Funds Allocations replaces the ORR–11 Refugee State of Origin Report and is designed to satisfy the statutory requirements of the Immigration and Nationality Act (INA). Section 412(a)(3)of the Act requires the Director of the Office of Refugee Resettlement (ORR) to make a periodic assessment, based on refugee population and other relevant factors, of the relative needs of refugees for assistance and services and the resources available to meet those needs. This includes compiling and maintaining data on the secondary migration of refugees within the United States after arrival. Further, INA 412(c)(1)(B)states that formula funds shall be allocated based on the total number of refugees, taking into account secondary migration.

In order to meet the statutory requirements, ORR requires each state to submit disaggregated individual records containing certain data elements for eligible refugee populations. This revised collection differs from the ORR–11 Refugee State-of-Origin Report process, whereby states submitted the ORR–11 form containing aggregate data on the number of refugees and entrants served whose ''area numbers'' (the first three digits of the social security number) fell into each of several designated numerical ranges. ORR used the information on the ORR–11 to measure secondary migration for the purposes of formula funds allocation to states. The revision is proposed due to the realization that:

(1) The Social Security Administration states that the first three digits of social security numbers (area number) should not be used for any other purpose than as an individual identifier for book-keeping purposes.

(2) It is possible for individuals to apply for social security numbers from any social security office, not just offices in the state in which they were born or first resided. This is particularly likely in metropolitan statistical areas where individuals may live in one of several states (*e.g.,* the Washington Metropolitan Area). In these cases, the area number of the social security number may be unreliable as a measure of refugees' state of initial resettlement.

(3) In recent years, the Social Security Administration has begun to issue social security numbers whose area number is not connected to any specific state.

The submission of individual records via the Refugee Data Submission System for Formula Funds Allocations Web site is a more reliable and secure process for collecting data for the purposes of tracking secondary migration and allocating formula funds. Data submitted by the States via the secure Web site are compiled and analyzed by the ORR statistician for the purpose of refugee secondary services formula funds allocation. The statistician also prepares a summary report, which is included in ORR's Annual Report to Congress.

Respondents: States and the District of Columbia.

ANNUAL BURDEN ESTIMATES

Instrument	Number of respondents	Number of responses per respondent	Average burden hours per response	Total burden hours
Refugee Data Submission for Formula Funds Allocations	50	1	20	1,000

Estimated Total Annual Burden Hours: 1,000.

Additional Information: Copies of the proposed collection may be obtained by writing to the Administration for Children and Families, Office of Planning, Research and Evaluation, 370 L'Enfant Promenade SW., Washington,

DC 20447, Attn: ACF Reports Clearance Officer. All requests should be identified by the title of the information collection. Email address: *infocollection@acf.hhs.gov.*

OMB Comment: OMB is required to make a decision concerning the collection of information between 30 and 60 days after publication of this document in the **Federal Register**. Therefore, a comment is best assured of having its full effect if OMB receives it within 30 days of publication. Written comments and recommendations for the proposed information collection should be sent directly to the following: Office of Management and Budget, Paperwork Reduction Project, Fax: 202–395–7285, Email: *OIRA_SUBMISSION@OMB.EOP.GOV,* Attn: Desk Officer for the Administration for Children and Families.

Robert Sargis,

Reports Clearance Officer.

[FR Doc. 2015–21727 Filed 9–1–15; 8:45 am]

BILLING CODE 4184–01–P

DEPARTMENT OF HEALTH AND HUMAN SERVICES

Food and Drug Administration

[Docket No. FDA–2011–D–0164]

Agency Information Collection Activities; Proposed Collection; Comment Request; Guidance for Industry on Safety Labeling Changes—Implementation of Section 505(o)(4) of the Federal Food, Drug, and Cosmetic Act

AGENCY: Food and Drug Administration, HHS.

ACTION: Notice.

SUMMARY: The Food and Drug Administration (FDA) is announcing an opportunity for public comment on the proposed collection of certain information by the Agency. Under the Paperwork Reduction Act of 1995 (the PRA), Federal Agencies are required to publish notice in the **Federal Register** concerning each proposed collection of information, including each proposed extension of an existing collection of information, and to allow 60 days for public comment in response to the notice. This notice solicits comments on the requirement to make safety related labeling changes based upon new safety information that becomes available after the drug or biological product is approved under the Federal Food, Drug, and Cosmetic Act (the FD&C Act) or the Public Health Service Act (PHS Act.)

DATES: Submit either electronic or written comments on the collection of information by November 2, 2015.

ADDRESSES: Submit electronic comments on the collection of information to: *http://www.regulations.gov.* Submit written comments on the collection of information to the Division of Dockets Management (HFA–305), Food and Drug Administration, 5630 Fishers Lane, Rm. 1061, Rockville, MD 20852. All comments should be identified with the docket number found in brackets in the heading of this document.

FOR FURTHER INFORMATION CONTACT: FDA PRA Staff, Office of Operations, Food and Drug Administration, 8455 Colesville Rd., COLE–14526, Silver Spring, MD 20993–0002, *PRAStaff@fda.hhs.gov.*

SUPPLEMENTARY INFORMATION: Under the PRA (44 U.S.C. 3501–3520), Federal Agencies must obtain approval from the Office of Management and Budget (OMB) for each collection of information they conduct or sponsor. ''Collection of information'' is defined in 44 U.S.C. 3502(3) and 5 CFR 1320.3(c) and includes Agency requests or requirements that members of the public submit reports, keep records, or provide information to a third party. Section 3506(c)(2)(A) of the PRA (44 U.S.C. 3506(c)(2)(A)) requires Federal Agencies to provide a 60-day notice in the **Federal Register** concerning each proposed collection of information, including each proposed extension of an existing collection of information, before submitting the collection to OMB for approval. To comply with this requirement, FDA is publishing notice of the proposed collection of information set forth in this document.

With respect to the following collection of information, FDA invites comments on: (1) Whether the proposed collection of information is necessary for the proper performance of FDA's functions, including whether the information will have practical utility; (2) the accuracy of FDA's estimate of the burden of the proposed collection of information, including the validity of the methodology and assumptions used; (3) ways to enhance the quality, utility, and clarity of the information to be collected; and (4) ways to minimize the burden of the collection of information on respondents, including through the use of automated collection techniques, when appropriate, and other forms of information technology.

Guidance for Industry on Safety Labeling Changes—Implementation of Section 505(o)(4) of the Federal Food, Drug, and Cosmetic Act (OMB Control Number 0910–0734)—Extension

Section 505(o)(4) of the FD&C Act (21 U.S.C. 355(o)(4)) authorizes FDA to require, and if necessary, order labeling changes if FDA becomes aware of new safety information that FDA believes should be included in the labeling of certain prescription drug and biological products approved under section 505 of the FD&C Act or section 351 of the PHS Act (42 U.S.C. 262). Section 505(o)(4) of the FD&C Act applies to prescription drug products with an approved new drug application (NDA) under section 505(b) of the FD&C Act, biological products with an approved biologics license application under section 351 of the PHS Act, or prescription drug products with an approved abbreviated new drug application under section 505(j) of the FD&C Act if the reference listed drug with an approved NDA is not currently marketed. Section 505(o)(4) imposes timeframes for application holders to submit and FDA staff to review such changes, and gives FDA new enforcement tools to bring about timely and appropriate labeling changes. The guidance provides information on the implementation of the new provisions, including a description of the types of safety labeling changes that ordinarily might be required under the new legislation, how FDA plans to determine what constitutes new safety information, the procedures involved in requiring safety labeling changes, and enforcement of the requirements for safety labeling changes.

FDA requires safety labeling changes by sending a notification letter to the application holder. Under section 505(o)(4)(B), the application holder must respond to FDA's notification by submitting a labeling supplement or notifying FDA that the applicant does not believe the labeling change is warranted and submitting a statement detailing the reasons why the application holder does not believe a change is warranted (a rebuttal statement).

Based on FDA's experience to date with safety labeling changes requirements under section 505(o)(4), we estimate that approximately 42 application holders will elect to submit approximately one rebuttal statement each year and that each rebuttal statement will take approximately 6 hours to prepare.

In addition, in the guidance, FDA states that new labeling prepared in

response to a safety labeling change notification should be available on the application holder's Web site within 10 calendar days of approval. FDA estimates that approximately 407 application holders will post new labeling one time each year in response to a safety labeling change notification and that the posting of the labeling will take approximately 4 hours to prepare.

FDA estimates the burden of this collection of information as follows:

TABLE 1—ESTIMATED ANNUAL REPORTING BURDEN [1]

	Number of respondents	Number of responses per respondent	Total annual responses	Average burden per response	Total hours
Rebuttal statement	42	1	42	6	252

[1] There are no capital costs or operating and maintenance costs associated with this collection of information.

TABLE 2—ESTIMATED ANNUAL THIRD-PARTY DISCLOSURE BURDEN [1]

Type of submission	Number of respondents	Number of disclosures per respondent	Total annual disclosures	Average burden per disclosure	Total hours
Posting approved labeling on application holder's Web site	407	1	407	4	1,628

[1] There are no capital costs or operating and maintenance costs associated with this collect of information.

Dated: August 27, 2015.

Leslie Kux,

Associate Commissioner for Policy.

[FR Doc. 2015–21645 Filed 9–1–15; 8:45 am]

BILLING CODE 4164–01–P

DEPARTMENT OF HEALTH AND HUMAN SERVICES

Food and Drug Administration

[Docket No. FDA–2015–N–0001]

Food and Drug Administration/Drug Information Association Oligonucleotide-Based Therapeutics Conference 2015

AGENCY: Food and Drug Administration, HHS.

ACTION: Notice of meeting.

SUMMARY: The Food and Drug Administration's (FDA's) Center for Drug Evaluation and Research, in cosponsorship with the Drug Information Association (DIA), is announcing a meeting entitled ''FDA/DIA Oligonucleotide-Based Therapeutics Conference 2015'' (FDA/DIA 2015 conference). The purpose of the meeting is to discuss advances, safety, and challenges in the field of oligonucleotide-based therapeutics.

DATES: The meeting will be held on September 9 to September 10, 2015, from 7 a.m. to 5 p.m. and September 11, 2015, from 7 a.m. to 12 noon.

ADDRESSES: The meeting will be held at the Grand Hyatt Washington, 1000 H St. NW., Washington, DC 20001.

FOR FURTHER INFORMATION CONTACT: Meredith Kaganovskiy, Drug Information Association (DIA), 800 Enterprise Rd., Horsham, PA 19044, 215–442–6117, FAX: 215–293–5923, email: *Meredith.kaganovskiy@diaglobal.org;* or Robert T. Dorsam, Food and Drug Administration, Center for Drug Evaluation and Research (CDER), 10903 New Hampshire Ave., Silver Spring, MD 20993–0002; 301–796–1623, email: *robert.dorsam@fda.hhs.gov.*

SUPPLEMENTARY INFORMATION:

I. Background

Oligonucleotide therapeutics constitute a diverse and evolving class of drug products that are being developed for a wide variety of indications. The FDA/DIA 2015 conference is a forum where regulators, academics, and members of industry will discuss the advances, challenges, and opportunities in the field of oligonucleotide therapeutics. This is the sixth meeting in approximately eight years where attendees will discuss oligonucleotide therapeutics in clinical, nonclinical, and chemistry tracks. The meeting will provide updates on advancements in this field, and will also present time for stakeholders to discuss challenges in the development and regulation of oligonucleotide therapeutics. Topics will be addressed using presentations, panel discussions, case studies, and a poster session to facilitate discipline-specific and multidisciplinary discussions. The goal of the meeting is to provide a current view of oligonucleotide therapeutics and foster advancement in the field through discussions among regulators, academics, and industry members.

II. Registration and Accommodations

A. Registration

There is a registration fee to attend this meeting. The registration fee is charged to help defray the costs of facilities, meeting materials, and food. Seats are limited, and registration will be on a first-come, first-served basis.

To register, please complete registration online at *http://www.diaglobal.org/.* (FDA has verified the Web address, but FDA is not responsible for subsequent changes to the Web site after this document publishes in the **Federal Register**.) The costs of registration for the different categories of attendees are as follows:

Category	Cost
Industry Representatives	$1,350
Charitable Nonprofit/Academic	675
Government	405

B. Accommodations

Attendees are responsible for their own hotel accommodations. Attendees making reservations at the Grand Hyatt Washington are eligible for a reduced rate of $209, not including applicable taxes. This rate is available for a limited number of rooms. To receive the reduced rate, hotel reservations must be made with onPeak and not directly with the hotel. Contact information for onPeak is as follows: Toll free in the United States 1–855–355–0302 or 1–212–532–1660. When calling, please select option 1 for ''Hotel Reservations,'' and inform the phone agent that you are making a reservation for Event #15011.

If you need special accommodations due to a disability, please contact Meredith Kaganovskiy (DIA) or Robert.

T. Dorsam (FDA) (see **FOR FURTHER INFORMATION CONTACT**).

Dated: August 27, 2015.

Leslie Kux,

Associate Commissioner for Policy.

[FR Doc. 2015–21639 Filed 9–1–15; 8:45 am]

BILLING CODE 4164–01–P

DEPARTMENT OF HEALTH AND HUMAN SERVICES

National Institutes of Health

Center for Scientific Review; Notice of Closed Meetings

Pursuant to section 10(d) of the Federal Advisory Committee Act, as amended (5 U.S.C. App.), notice is hereby given of the following meetings.

The meetings will be closed to the public in accordance with the provisions set forth in sections 552b(c)(4) and 552b(c)(6), Title 5 U.S.C., as amended. The grant applications and the discussions could disclose confidential trade secrets or commercial property such as patentable material, and personal information concerning individuals associated with the grant applications, the disclosure of which would constitute a clearly unwarranted invasion of personal privacy.

Name of Committee: Healthcare Delivery and Methodologies Integrated Review Group; Health Services Organization and Delivery Study Section.

Date: September 28–29, 2015.

Time: 9:30 a.m. to 5:00 p.m.

Agenda: To review and evaluate grant applications.

Place: Wyndham Grand Chicago Riverfront; 71 East Wacker Drive; Chicago, IL 60601.

Contact Person: Jacinta Bronte-Tinkew, Ph.D.; Scientific Review Officer; Center for Scientific Review; National Institutes of Health; 6701 Rockledge Drive, Room 3164, MSC 7770; Bethesda, MD 20892; (301) 806–0009; *brontetinkewjm@csr.nih.gov.*

Name of Committee: Surgical Sciences, Biomedical Imaging and Bioengineering Integrated Review Group; Clinical Molecular Imaging and Probe Development.

Date: October 5–6, 2015.

Time: 8:00 a.m. to 5:00 p.m.

Agenda: To review and evaluate grant applications.

Place: Hilton Alexandria Mark Center; 5000 Seminary Road; Alexandria, VA 22311.

Contact Person: David L Williams, Ph.D.; Scientific Review Officer; Center for Scientific Review; National Institutes of Health; 6701 Rockledge Drive, Room 5110, MSC 7854; Bethesda, MD 20892; (301)435–1174; *williamsdl2@csr.nih.gov.*

Name of Committee: Center for Scientific Review Special Emphasis Panel; Development and Application of PET and SPECT Imaging Ligands as Biomarkers for Drug Discovery and for Pathophysiological Studies of CNS Disorders (R21/R33).

Date: October 6, 2015.

Time: 12:00 p.m. to 5:00 p.m.

Agenda: To review and evaluate grant applications.

Place: Hilton Alexandria Mark Center; 5000 Seminary Road; Alexandria, VA 22311.

Contact Person: David L Williams, Ph.D.; Scientific Review Officer; Center for Scientific Review; National Institutes of Health; 6701 Rockledge Drive, Room 5110, MSC 7854; Bethesda, MD 20892; (301)435–1174; *williamsdl2@csr.nih.gov.*

(Catalogue of Federal Domestic Assistance Program Nos. 93.306, Comparative Medicine; 93.333, Clinical Research, 93.306, 93.333, 93.337, 93.393–93.396, 93.837–93.844, 93.846–93.878, 93.892, 93.893, National Institutes of Health, HHS)

Dated: August 27, 2015.

Carolyn Baum,

Program Analyst, Office of Federal Advisory Committee Policy.

[FR Doc. 2015–21705 Filed 9–1–15; 8:45 am]

BILLING CODE 4140–01–P

DEPARTMENT OF HEALTH AND HUMAN SERVICES

National Institutes of Health

National Institute of Allergy and Infectious Diseases; Notice of Closed Meetings

Pursuant to section 10(d) of the Federal Advisory Committee Act, as amended (5 U.S.C. App.), notice is hereby given of the following meetings.

The meetings will be closed to the public in accordance with the provisions set forth in sections 552b(c)(4) and 552b(c)(6), Title 5 U.S.C., as amended. The grant applications and the discussions could disclose confidential trade secrets or commercial property such as patentable material, and personal information concerning individuals associated with the grant applications, the disclosure of which would constitute a clearly unwarranted invasion of personal privacy.

Name of Committee: National Institute of Allergy and Infectious Diseases Special Emphasis Panel; NIAID Investigator Initiated Program Project Applications (P01).

Date: September 28, 2015.

Time: 10:00 a.m. to 5:00 p.m.

Agenda: To review and evaluate grant applications.

Place: National Institutes of Health, Room 3C100, 5601 Fishers Lane, Rockville, MD 20892, (Telephone Conference Call).

Contact Person: Zhuqing (Charlie) Li, Ph.D., Scientific Review Officer, Scientific Review Program, Division of Extramural Activities, Room # 3G41B, National Institutes of Health/NIAID, 5601 Fishers Lane, MSC9823, Bethesda, MD 20892–9823, (240) 669–5068, *zhuqing.li@nih.gov.*

Name of Committee: National Institute of Allergy and Infectious Diseases Special Emphasis Panel; NIAID Investigator Initiated Program Project Applications (P01).

Date: September 29, 2015.

Time: 11:00 a.m. to 5:00 p.m.

Agenda: To review and evaluate grant applications.

Place: National Institutes of Health, Room 8F100, 5601 Fishers Lane, Rockville, MD 20892, (Telephone Conference Call).

Contact Person: Thomas F. Conway, Scientific Review Officer, Scientific Review Program, Division of Extramural Activities, Room 3G51, National Institutes of Health, NIAID, 5601 Fishers Lane, MSC 9823, Bethesda, MD 20892–9823, 240–507–9685, *thomas.conway@nih.gov.*

(Catalogue of Federal Domestic Assistance Program Nos. 93.855, Allergy, Immunology, and Transplantation Research; 93.856, Microbiology and Infectious Diseases Research, National Institutes of Health, HHS)

Dated: August 27, 2015.

David Clary,

Program Analyst, Office of Federal Advisory Committee Policy.

[FR Doc. 2015–21704 Filed 9–1–15; 8:45 am]

BILLING CODE 4140–01–P

DEPARTMENT OF HEALTH AND HUMAN SERVICES

National Institutes of Health

Prospective Grant of Co-Exclusive License: Biomarkers for Acute Ischemic Stroke

AGENCY: National Institutes of Health, HHS.

ACTION: Notice.

SUMMARY: This is notice, in accordance with 35 U.S.C. 209 and 37 CFR part 404, that the National Institutes of Health, Department of Health and Human Services, is contemplating the grant of a co-exclusive patent license to practice the inventions embodied in U.S. Patent Application No. 13/580,571 filed 22 August, 2012 and entitled ''Biomarkers for Acute Ischemic Stroke'' [HHS Ref. No. E–023–2010/0–US–03] to CereDx, Inc., which is located in West Virginia. The patent rights in this invention have been assigned to the United States of America.

The prospective co-exclusive license territory may be worldwide and the field of use may be limited to the use of the diagnostics of ischemic stroke.

DATES: Only written comments and/or applications for a license which are received by the NIH Office of Technology Transfer on or before October 2, 2015 will be considered. This notice updates the **Federal Register** Notice published in 80 FR 28633, Tuesday May 19, 2015.

ADDRESSES: Requests for copies of the patent application, inquiries, comments, and other materials relating to the contemplated co-exclusive license should be directed to: Uri Reichman, Ph.D., MBA, Licensing and Patenting Manager, Office of Technology Transfer, National Institutes of Health, 6011 Executive Boulevard, Suite 325, Rockville, MD 20852–3804. Telephone: (301) 435–4616; Facsimile: (301) 402–0220; Email: *reichmau@mail.nih.gov.*

SUPPLEMENTARY INFORMATION: This technology is directed to gene biomarkers for the diagnosis and potential treatment of acute ischemic stroke. Stroke is the third leading cause of death in the United States, of which 87% are ischemic stroke and result in death within 30 days in 8–12% of the cases. Currently, recombinant tissue plasminogen activator (rtPA, trade name alteplase), is the only FDA approved ischemic stroke treatment, and it is only effective when administered to patients within three hours from the onset of symptoms. Unfortunately, the median time from stroke symptom onset to presentation to the emergency department is 3–6 hours. Although advances in neuroimaging and clinical management have helped with patient survival rates, these techniques are not infallible and at times result in misdiagnosis. The biomarkers identified in this technology may be used to develop a diagnostic testing device for determining stroke subtype in the field.

The prospective co-exclusive license will be royalty bearing and will comply with the terms and conditions of 35 U.S.C. 209 and 37 CFR part 404. The prospective co-exclusive license may be granted unless within thirty (30) days from the date of this published notice, the NIH receives written evidence and argument that establishes that the grant of the license would not be consistent with the requirements of 35 U.S.C. 209 and 37 CFR part 404.

Applications for a license in the field of use filed in response to this notice will be treated as objections to the grant of the contemplated co-exclusive license. Comments and objections submitted to this notice will not be made available for public inspection and, to the extent permitted by law, will not be released under the Freedom of Information Act, 5 U.S.C. 552.

Dated: August 28, 2015.

Richard U. Rodriguez,

Acting Director, Office of Technology Transfer, National Institutes of Health.

[FR Doc. 2015–21718 Filed 9–1–15; 8:45 am]

BILLING CODE 4140–01–P

DEPARTMENT OF HEALTH AND HUMAN SERVICES

National Institutes of Health

National Institute of Allergy and Infectious Diseases; Notice of Closed Meeting

Pursuant to section 10(d) of the Federal Advisory Committee Act, as amended (5 U.S.C. App.), notice is hereby given of the following meeting.

The meeting will be closed to the public in accordance with the provisions set forth in sections 552b(c)(4) and 552b(c)(6), Title 5 U.S.C., as amended. The contract proposals and the discussions could disclose confidential trade secrets or commercial property such as patentable material, and personal information concerning individuals associated with the contract proposals, the disclosure of which would constitute a clearly unwarranted invasion of personal privacy.

Name of Committee: National Institute of Allergy and Infectious Diseases Special Emphasis Panel; Microbiology and Infectious Diseases Biological Resource Repository (MID–BRR).

Date: September 25, 2015.

Time: 8:30 a.m. to 12:00 p.m.

Agenda: To review and evaluate contract proposals.

Place: National Institutes of Health; Room 2C100; 5601 Fishers Lane; Rockville, MD 20892; (Telephone Conference Call).

Contact Person: Annie Walker-Abbey; Scientific Review Officer; Scientific Review Program; NIAID/NIH/DHHS; 5601 Fishers Lane, Room 3E70A; Rockville, MD 20852; 240–627–3390; *aabbey@niaid.nih.gov.*

(Catalogue of Federal Domestic Assistance Program Nos. 93.855, Allergy, Immunology, and Transplantation Research; 93.856, Microbiology and Infectious Diseases Research, National Institutes of Health, HHS)

Dated: August 27, 2015.

David Clary,

Program Analyst, Office of Federal Advisory Committee Policy.

[FR Doc. 2015–21703 Filed 9–1–15; 8:45 am]

BILLING CODE 4140–01–P

DEPARTMENT OF HEALTH AND HUMAN SERVICES

National Institutes of Health

Proposed Collection; 60-Day Comment Request; Application Forms for the NIDA Summer Research Internship Program (NIDA)

SUMMARY: In compliance with the requirement of Section 3506(c)(2)(A) of the Paperwork Reduction Act of 1995, for opportunity for public comment on proposed data collection projects, the National Institute of Drug Abuse, the National Institutes of Health (NIH) will publish periodic summaries of proposed projects to be submitted to the Office of Management and Budget (OMB) for review and approval.

Written comments and/or suggestions from the public and affected agencies are invited to address one or more of the following points: (1) Whether the proposed collection of information is necessary for the proper performance of the function of the agency, including whether the information will have practical utility; (2) The accuracy of the agency's estimate of the burden of the proposed collection of information, including the validity of the methodology and assumptions used; (3) The quality, utility, and clarity of the information to be collected; and (4) Minimize the burden of the collection of information on those who are to respond, including the use of appropriate automated, electronic, mechanical, or other technological collection techniques or other forms of information technology.

To Submit Comments and for Further Information: To obtain a copy of the data collection plans and instruments, submit comments in writing, or request more information on the proposed project, contact: Albert Avila, Ph.D., Director, Office of Diversity and Health Disparities, NIDA, NIH, 6001 Executive Blvd., Room 3106, Rockville, MD 20852, or call non-toll-free number (301) 443–0441 or Email your request, including your address to: *aavila@nida.nih.gov.* Formal requests for additional plans and instruments must be requested in writing.

Comment Due Date: Comments regarding this information collection are best assured of having their full effect if received within 60 days of the date of this publication.

Proposed Collection: NIDA Summer Research Internship Program, 0925–NEW, National Institute on Drug Abuse, NIDA, National Institutes of Health (NIH).

Need and Use of Information Collection: The NIDA Summer Research Internship program introduces high school and undergraduate students of underrepresented populations to substance abuse research through internships with NIDA grantees at universities across the United States and Puerto Rico. Students intern with NIDA principal investigators for 8–10 weeks during the summer. The internship experience may include laboratory experiments, formal courses, data collection, data analysis, patient recruitment, manuscript preparation, literature reviews and library research.

This outreach and pipeline program exposes students interested in biomedical and behavioral research careers to cutting edge substance abuse research.

This program fills a significant unmet need to encourage and support individuals from underrepresented groups to pursue careers in substance abuse research. The NIDA Summer Research Internship program offers a unique opportunity to increase the diversity and creativity of the biomedical research workforce by fostering the development of young talent through the creation of mentorship and training opportunities with premier substance abuse research laboratories around the country.

OMB approval is requested for 3 years. There are no costs to respondents other than their time. The total estimated annualized burden hours are 350.

ESTIMATED ANNUALIZED BURDEN HOURS

Form name	Type of respondent	Number of respondents	Number of responses per respondent	Average time per response (in hours)	Total annual burden hour
Student Application Form	Individuals/Households—High School Students.	100	1	1	100
Student Application Form	Individuals/Households—Undergraduates.	250	1	1	250

Dated: August 27, 2015.

Genevieve deAlmeida,

Project Clearance Liaison, NIDA, NIH.

[FR Doc. 2015–21702 Filed 9–1–15; 8:45 am]

BILLING CODE 4140–01–P

DEPARTMENT OF HOMELAND SECURITY

Federal Emergency Management Agency

[Docket ID FEMA–2015–0001]

Changes in Flood Hazard Determinations

AGENCY: Federal Emergency Management Agency, DHS.

ACTION: Final notice.

SUMMARY: New or modified Base (1-percent annual chance) Flood Elevations (BFEs), base flood depths, Special Flood Hazard Area (SFHA) boundaries or zone designations, and/or regulatory floodways (hereinafter referred to as flood hazard determinations) as shown on the indicated Letter of Map Revision (LOMR) for each of the communities listed in the table below are finalized. Each LOMR revises the Flood Insurance Rate Maps (FIRMs), and in some cases the Flood Insurance Study (FIS) reports, currently in effect for the listed communities. The flood hazard determinations modified by each LOMR will be used to calculate flood insurance premium rates for new buildings and their contents.

DATES: The effective date for each LOMR is indicated in the table below.

ADDRESSES: Each LOMR is available for inspection at both the respective Community Map Repository address listed in the table below and online through the FEMA Map Service Center at *www.msc.fema.gov.*

FOR FURTHER INFORMATION CONTACT: Luis Rodriguez, Chief, Engineering Management Branch, Federal Insurance and Mitigation Administration, FEMA, 500 C Street SW., Washington, DC 20472, (202) 646–4064, or (email) *Luis.Rodriguez3@fema.dhs.gov;* or visit the FEMA Map Information eXchange (FMIX) online at *www.floodmaps.fema.gov/fhm/fmx_main.html.*

SUPPLEMENTARY INFORMATION: The Federal Emergency Management Agency (FEMA) makes the final flood hazard determinations as shown in the LOMRs for each community listed in the table below. Notice of these modified flood hazard determinations has been published in newspapers of local circulation and 90 days have elapsed since that publication. The Deputy Associate Administrator for Mitigation has resolved any appeals resulting from this notification.

The modified flood hazard determinations are made pursuant to section 206 of the Flood Disaster Protection Act of 1973, 42 U.S.C. 4105, and are in accordance with the National Flood Insurance Act of 1968, 42 U.S.C. 4001 *et seq.,* and with 44 CFR part 65.

For rating purposes, the currently effective community number is shown and must be used for all new policies and renewals.

The new or modified flood hazard information is the basis for the floodplain management measures that the community is required either to adopt or to show evidence of being already in effect in order to remain qualified for participation in the National Flood Insurance Program (NFIP).

This new or modified flood hazard information, together with the floodplain management criteria required by 44 CFR 60.3, are the minimum that are required. They should not be construed to mean that the community must change any existing ordinances that are more stringent in their floodplain management requirements. The community may at any time enact stricter requirements of its own or pursuant to policies established by other Federal, State, or regional entities.

This new or modified flood hazard determinations are used to meet the floodplain management requirements of the NFIP and also are used to calculate the appropriate flood insurance premium rates for new buildings, and for the contents in those buildings. The changes in flood hazard determinations are in accordance with 44 CFR 65.4.

Interested lessees and owners of real property are encouraged to review the final flood hazard information available at the address cited below for each community or online through the FEMA Map Service Center at *www.msc.fema.gov.*

(Catalog of Federal Domestic Assistance No. 97.022, ''Flood Insurance.'')

Dated: August 10, 2015.

Roy E. Wright,

Deputy Associate Administrator for Insurance and Mitigation, Department of Homeland Security, Federal Emergency Management Agency.

State and county	Location and case No.	Chief executive officer of community	Community map repository	Effective date of modification	Community No.
Alabama:					
Madison (FEMA Docket No.: B–1508).	City of Huntsville (15–04–0198P).	The Honorable Tommy Battle, Mayor, City of Huntsville, 308 Fountain Circle, Huntsville, AL 35801.	Engineering Department, 308 Fountain Circle, Huntsville, AL 35801.	Jul. 6, 2015	010153
Madison (FEMA Docket No.: B–1508).	Unincorporated areas of Madison County, (15–04–0198P).	The Honorable Dale W. Strong, Chairman, Madison County Commission, 100 Northside Square, Huntsville, AL 35801.	Madison County Engineering Building, 266–C Shields Road, Huntsville, AL 35811.	Jul. 6, 2015	010151
Montgomery (FEMA Docket No.: B–1514).	Town of Pike Road, (14–04–9699P).	The Honorable Gordon Stone, Mayor, Town of Pike Road, 9575 Vaughan Road, Pike Road, AL 36064.	Town Hall, 9575 Vaughan Road, Pike Road, AL 36064.	Jul. 10, 2015	010433
Montgomery (FEMA Docket No.: B–1514).	Unincorporated areas of Montgomery County, (14–04–9699P).	The Honorable Elton N. Dean, Sr., Chairman, Montgomery County Commission, P.O. Box 1667, Montgomery, AL 36102.	Montgomery County, Engineering Department, 100 South Lawrence Street, Montgomery, AL 36104.	Jul. 10, 2015	010278
Colorado:					
Arapahoe ..... (FEMA Docket No.: B–1514).	City of Aurora, (14–08–0918P).	The Honorable Steve Hogan, Mayor, City of Aurora, 15151 East Alameda Parkway, Aurora, CO 80012.	City Hall, 15151 East Alameda Parkway, Aurora, CO 80012.	Jul. 10, 2015	080002
Denver (FEMA Docket No.: B–1508).	City and County of Denver (15–08–0320P).	The Honorable Michael B. Hancock, Mayor, City and County of Denver, 1437 Bannock Street, Suite 350, Denver, CO 80202.	Department of Public Works, 201 West Colfax Avenue, Denver, CO 80202.	Jun. 19, 2015	080046
Denver (FEMA Docket No.: B–1508).	City and County of Denver (15–08–0321P).	The Honorable Michael B. Hancock, Mayor, City and County of Denver, 1437 Bannock Street, Suite 350, Denver, CO 80202.	Department of Public Works, 201 West Colfax Avenue, Denver, CO 80202.	Jun. 19, 2015	080046
La Plata (FEMA Docket No.: B–1514).	Unincorporated areas of La Plata County (14–08–1382P).	The Honorable Julie Westendorff, Chair, La Plata County Board of Commissioners, 1060 East 2nd Avenue, Durango, CO 81301.	La Plata County Administration Office, 1060 East 2nd Avenue, Durango, CO 81301.	Jul. 10, 2015	080097
Delaware: Kent (FEMA Docket No.: B–1509).	City of Dover (15–03–0103P).	The Honorable Robin R. Christiansen, Mayor, City of Dover, 15 Loockerman Plaza, Dover, DE 19901.	Department of Planning and Inspection, 15 Loockerman Plaza, Dover, DE 19901.	Jun. 26, 2015	100006
Florida:					
Alachua (FEMA Docket No.: B–1508).	Unincorporated areas of Alachua County, (15–04–0356P).	The Honorable Lee Pinkoson, Chairman, Alachua County Board of Commissioners, P.O. Box 5547, Gainesville, FL 32627.	Alachua County Public Works Department, 5620 Northwest 120th Lane, Gainesville, FL 32653.	Jul. 3, 2015	120001
Charlotte (FEMA Docket No.: B–1508).	Unincorporated areas of Charlotte County (15–04–1137P).	The Honorable Bill Truex, Chairman, Charlotte County Board of Commissioners, 18500 Murdock Circle, Port Charlotte, FL 33948.	Charlotte County Community Development Department, 18500 Murdock Circle, Port Charlotte, FL 33948.	Jun. 19, 2015	120061
Collier (FEMA Docket No.: B–1514).	City of Marco Island (14–04–6846P).	The Honorable Lawrence Sacher, Chairman, City of Marco Island Council, 50 Bald Eagle Drive, Marco Island, FL 34145.	City Hall, 50 Bald Eagle Drive, Marco Island, FL 34145.	Jun. 19, 2015	120426
Collier (FEMA Docket No.: B–1508).	City of Marco Island (15–04–1069P).	The Honorable Lawrence Sacher, Chairman, City of Marco Island Council, 50 Bald Eagle Drive, Marco Island, FL 34145.	City Hall, 50 Bald Eagle Drive, Marco Island, FL 34145.	Jun. 19, 2015	120426
Manatee (FEMA Docket No.: B–1514).	City of Holmes Beach (15–04–1453P).	The Honorable Bob Johnson, Mayor, City of Holmes Beach, 5801 Marina Drive, Holmes Beach, FL 34217.	City Hall, 5801 Marina Drive, Holmes Beach, FL 34217.	Jun. 25, 2015	125114
Manatee (FEMA Docket No.: B–1514).	Unincorporated areas of Manatee County (15–04–1453P).	The Honorable Betsy Benac, Chair, Manatee County Board of Commissioners, P.O. Box 1000, Bradenton, FL 34206.	Manatee County Building and Development, Services Department, 1112 Manatee Avenue West, Bradenton, FL 34205.	Jun. 25, 2015	120153
Marion (FEMA Docket No.: B–1508).	City of Ocala (14–04–6358P).	The Honorable Kent Guinn, Mayor, City of Ocala, 110 Southeast Watula Avenue, Ocala, FL 34471.	Engineering Department, 405 Southeast Osceola Avenue, Ocala, FL 34478.	Jun. 25, 2015	120330
Miami-Dade (FEMA Docket No.: B–1514).	City of Sunny Isles Beach (15–04–0303P).	The Honorable George ''Bud'' Scholl, Mayor, City of Sunny Isles Beach, 18070 Collins Avenue, Sunny Isles Beach, FL 33160.	City Hall, 18070 Collins Avenue, Sunny Isles Beach, FL 33160.	Jul. 3, 2015	120688
Monroe (FEMA Docket No.: B–1514).	Unincorporated areas of Monroe County (15–04–1298P).	The Honorable Danny Kolhage, Mayor, Monroe County, 1100 Simonton Street, Key West, FL 33040.	Monroe County, Department of Planning and Environmental Resources, 2798 Overseas Highway, Marathon, FL 33050.	Jul. 10, 2015	125129
Pinellas (FEMA Docket No.: B–1508).	City of Clearwater (14–04–A506P).	The Honorable George N. Cretekos, Mayor, City of Clearwater, P.O. Box 4748, Clearwater, FL 33758.	Public Works Department, 100 South Myrtle Avenue, Suite 220, Clearwater, FL 33758.	Jun. 25, 2015	125096
Pinellas (FEMA Docket No.: B–1514).	City of Dunedin (14–04–A013P).	The Honorable Julie Ward Bojalski, Mayor, City of Dunedin, 542 Main Street, Dunedin, FL 34697.	Engineering Department, 542 Main Street, Dunedin, FL 34697.	Jul. 10, 2015	125103
Pinellas (FEMA Docket No.: B–1514).	City of Madeira Beach (14–04–8328P).	The Honorable Travis Palladeno, Mayor, City of Madeira Beach, 300 Municipal Drive, Madeira Beach, FL 33708.	Building Department, 300 Municipal Drive, Madeira Beach, FL 33708.	Jul. 3, 2015	125127

State and county	Location and case No.	Chief executive officer of community	Community map repository	Effective date of modification	Community No.
Seminole (FEMA Docket No.: B–1508).	City of Longwood (15–04–0949P).	The Honorable John Maingot, Mayor, City of Longwood, 175 West Warren Avenue, Longwood, FL 32750.	City Hall, 175 West Warren Avenue, Longwood, FL 32750.	Jun. 19, 2015	120292
Seminole (FEMA Docket No.: B–1514).	Unincorporated areas of Seminole County (14–04–AB49P).	The Honorable Bob Dallari, Chairman, Seminole County Board of Commissioners, 1101 East 1st Street, Sanford, FL 32771.	Seminole County Development Services Department, 1101 East 1st Street, Sanford, FL 32771.	Jul. 10, 2015	120289
Georgia: Columbia (FEMA Docket No.: B–1508).	Unincorporated areas of Columbia County (15–04–0305P).	The Honorable Ron Cross, Chairman, Columbia County Board of Commissioners, P.O. Box 498, Evans, GA 30809.	Columbia County Planning Services Division, 603 Ronald Reagan Drive, Building B, Evans, GA 30809.	Jun. 19, 2015	130059
Kentucky:					
Kenton (FEMA Docket No.: B–1508).	City of Covington (15–04–2329P).	The Honorable Sherry Carran, Mayor, City of Covington, 20 West Pike Street, Covington, KY 41011.	City Hall, 20 West Pike Street, Covington, KY 41011.	Jun. 19, 2015	210129
Kentucky:					
Kenton (FEMA Docket No.: B–1508).	City of Fort Wright (15–04–2329P).	The Honorable Joseph Nienaber, Jr., Mayor, City of Fort Wright, 409 Kyles Lane, Fort Wright, KY 41011.	City Hall, 409 Kyles Lane, Fort Wright, KY 41011.	Jun. 19, 2015	210249
Hardin (FEMA Docket No.: B–1514).	City of Elizabethtown (14–04–6996P).	The Honorable Edna Berger, Mayor, City of Elizabethtown, P.O. Box 550, Elizabethtown, KY 42702.	City Hall, 200 West Dixie Avenue, Elizabethtown, KY 42702.	Jul. 2, 2015	210095
New Mexico:					
Santa Fe. (FEMA Docket No.: B–1509).	City of Santa Fe (15–06–0598P).	The Honorable Javier M. Gonzales, Mayor, City of Santa Fe, 200 Lincoln Avenue, Santa Fe, NM 87501.	City Hall, 200 Lincoln Avenue, Santa Fe, NM 87501.	Jun. 25, 2015	350070
Santa Fe. (FEMA Docket No.: B–1509).	The Unincorporated areas of Santa Fe County (15–06–0598P).	The Honorable Shannon Broderick Bulman, Santa Fe County Probate Judge, 102 Grant Avenue, Santa Fe, NM 87501.	Santa Fe County Public Works Department, 102 Grant Avenue, Santa Fe, NM 87501.	Jun. 25, 2015	350069
North Carolina:					
Guilford (FEMA Docket No.: B–1514).	City of Greensboro (14–04–7717P).	The Honorable Nancy Vaughan, Mayor, City of Greensboro, P.O. Box 3136, Greensboro, NC 27402.	Central Library, 219 North Church Street, Greensboro, NC 27401.	Jul. 7, 2015	375351
Guilford (FEMA Docket No.: B–1514).	Unincorporated areas of Guilford County (14–04–7717P).	The Honorable Hank Henning, Chairman, Guilford County Board of Commissioners, P.O. Box 3427, Greensboro, NC 27402.	Independent Center, 400 West Market Street, Greensboro, NC 27402.	Jul. 7, 2015	370111
Haywood (FEMA Docket No.: B–1514).	Unincorporated areas of Haywood County (14–04–8009P).	The Honorable Mark S. Swanger, Chairman, Haywood County Board of Commissioners, 215 North Main Street, Waynesville, NC 28786.	Haywood County Planning Division, 157 Paragon Parkway, Suite 200, Clyde, NC 28721.	Jul. 16, 2015	370120
Wake (FEMA Docket No.: B–1508).	City of Raleigh (14–04–8341P).	The Honorable Nancy McFarlane, Mayor, City of Raleigh, P.O. Box 590, Raleigh, NC 27602.	Public Works Department, 222 West Hargett Street, Raleigh, NC 27601.	Jun 26, 2015	370243
Wake (FEMA Docket No.: B–1508).	Unincorporated areas of Wake County (14–04–8341P).	The Honorable James West, Chairman, Wake County Board of Commissioners, P.O. Box 550, Raleigh, NC 27602.	Wake County Environmental Services Department, 336 Fayetteville Street, Raleigh, NC 27602.	Jun 26, 2015	370368
Oklahoma: Tulsa (FEMA Docket No.: B–1509).	City of Broken Arrow (14–06–3286P).	The Honorable Craig Thurmond, Mayor, City of Broken Arrow, 220 South 1st Street, Broken Arrow, OK 74012.	City Hall, 220 South 1st Street, Broken Arrow, OK 74012.	Jun. 22, 2015	400236
Pennsylvania:					
Berks (FEMA Docket No.: B–1509).	City of Reading (13–03–2114P).	The Honorable Vaughn D. Spencer, Mayor, City of Reading, 815 Washington Street, Reading, PA 19601.	Community Development Department, 815 Washington Street, Reading, PA 19601.	Jun. 26, 2015	420130
Berks (FEMA Docket No.: B–1509).	Township of Cumru (13–03–2114P).	The Honorable Jeanne E. Johnston, Manager, Township of Cumru, 1775 Welsh Road, Mohnton, PA 19540.	Township Office Building, 1775 Welsh Road, Mohnton, PA 19540.	Jun. 26, 2015	420130
Delaware (FEMA Docket No.: B–1516).	Township of Edgmont. (14–03–3292P).	The Honorable Ronald Gravina, Chairman, Township of Edgmont Board of Supervisors, 1000 Gradyville Road, Gradyville, PA 19039.	Township Municipal, Building, 1000 Gradyville Road, Gradyville, PA 19039.	Jul. 9, 2015	420414
South Carolina: Charleston (FEMA Docket No.: B–1508).	City of Charleston (15–04–0605P).	The Honorable Joseph P. Riley, Jr., Mayor, City of Charleston, P.O. Box 652, Charleston, SC 29402.	Engineering Department, 75 Calhoun Street Division 301, Charleston, SC 29402.	Jun. 19, 2015	455412
Texas:					
Bell (FEMA Docket No.: B–1516).	City of Killeen (14–06–4047P).	The Honorable Scott Cosper, Mayor, City of Killeen, P.O. Box 1329, Killeen, TX 76540.	Building and Inspections Division, 100 East Avenue C, Killeen, TX 76541.	Jul. 9, 2015	480031
Collin (FEMA Docket No.: B–1516).	Unincorporated areas of Collin County (14–06–2017P).	The Honorable Keith Self, Collin County Judge, 2300 Bloomdale Road, Suite 4192, McKinney, TX 75071.	Collin County Engineering Department, 4690 Community Avenue, Suite 200, McKinney, TX 75071.	Jun. 4, 2015	480130
Denton (FEMA Docket No.: B–1509).	Unincorporated areas of Denton County (14–06–2414P).	The Honorable Mary Horn, Denton County Judge, 110 West Hickory Street, 2nd Floor, Denton, TX 76201.	Denton County Government Center, 1505 East McKinney Street, Suite 175, Denton, TX 76209.	Jun. 24, 2015	480774
Utah: Davis (FEMA Docket No.: B–1508).	City of Farmington (15–08–0034P).	The Honorable Jim Talbot, Mayor, City of Farmington, 160 South Main, Farmington, UT 84025.	GIS Department, 1600 South Main, Farmington, UT 84025.	Jun. 26, 2015	490044

State and county	Location and case No.	Chief executive officer of community	Community map repository	Effective date of modification	Community No.
West Virginia: Kanawha (FEMA Docket No.: B–1516).	Unincorporated areas of Kanawha County (15–03–0904P).	The Honorable W. Kent Carper, President, Kanawha County Commission, P.O. Box 3227, Charleston, WV 25336.	Kanawha County Annex Building, 407 Virginia Street East, Charleston, WV 25301.	Jul. 6, 2015	540070

[FR Doc. 2015–21738 Filed 9–1–15; 8:45 am]

BILLING CODE 9110–12–P

DEPARTMENT OF HOMELAND SECURITY

Federal Emergency Management Agency

[Docket No. FEMA–2015–0001; Internal Agency Docket No. FEMA–B–1524]

Proposed Flood Hazard Determinations

AGENCY: Federal Emergency Management Agency; DHS.

ACTION: Notice; correction.

SUMMARY: On July 17, 2015, FEMA published in the **Federal Register** a proposed flood hazard determination notice that contained an erroneous table. This notice provides corrections to that table, to be used in lieu of the information published at 80 FR 42523. The table provided here represents the proposed flood hazard determinations and communities affected for Jackson County, Missouri, and Incorporated Areas.

DATES: Comments are to be submitted on or before December 1, 2015.

ADDRESSES: The Preliminary Flood Insurance Rate Map (FIRM), and where applicable, the Flood Insurance Study (FIS) report for each community are available for inspection at both the online location and the respective Community Map Repository address listed in the table below. Additionally, the current effective FIRM and FIS report for each community are accessible online through the FEMA Map Service Center at *www.msc.fema.gov* for comparison.

You may submit comments, identified by Docket No. FEMA–B–1524, to Luis Rodriguez, Chief, Engineering Management Branch, Federal Insurance and Mitigation Administration, FEMA, 500 C Street SW., Washington, DC 20472, (202) 646–4064, or (email) *Luis.Rodriguez3@fema.dhs.gov.*

FOR FURTHER INFORMATION CONTACT: Luis Rodriguez, Chief, Engineering Management Branch, Federal Insurance and Mitigation Administration, FEMA, 500 C Street SW., Washington, DC 20472, (202) 646–4064 or (email) *Luis.Rodriguez3@fema.dhs.gov;* or visit the FEMA Map Information eXchange (FMIX) online at *www.floodmaps.fema.gov/fhm/fmx_main.html.*

SUPPLEMENTARY INFORMATION: FEMA proposes to make flood hazard determinations for each community listed in the table below, in accordance with Section 110 of the Flood Disaster Protection Act of 1973, 42 U.S.C. 4104, and 44 CFR 67.4(a).

These proposed flood hazard determinations, together with the floodplain management criteria required by 44 CFR 60.3, are the minimum that are required. They should not be construed to mean that the community must change any existing ordinances that are more stringent in their floodplain management requirements. The community may at any time enact stricter requirements of its own, or pursuant to policies established by other Federal, State, or regional entities. These flood hazard determinations are used to meet the floodplain management requirements of the NFIP and are also used to calculate the appropriate flood insurance premium rates for new buildings built after the FIRM and FIS report become effective.

Use of a Scientific Resolution Panel (SRP) is available to communities in support of the appeal resolution process. SRPs are independent panels of experts in hydrology, hydraulics, and other pertinent sciences established to review conflicting scientific and technical data and provide recommendations for resolution. Use of the SRP may only be exercised after FEMA and local communities have been engaged in a collaborative consultation process for at least 60 days without a mutually acceptable resolution of an appeal. Additional information regarding the SRP process can be found online at *http://floodsrp.org/pdfs/srp_fact_sheet.pdf.*

The communities affected by the flood hazard determinations are provided in the table below. Any request for reconsideration of the revised flood hazard determinations shown on the Preliminary FIRM and FIS report that satisfies the data requirements outlined in 44 CFR 67.6(b) is considered an appeal. Comments unrelated to the flood hazard determinations will also be considered before the FIRM and FIS report are made final.

Correction

In the proposed flood hazard determination notice published at 80 FR 42523 in the July 17, 2015, issue of the **Federal Register**, FEMA published a table titled ''Jackson County, MO, and Incorporated Areas''. This table contained inaccurate information as to the community map repository for the City of Kansas City featured in the table.

In this document, FEMA is publishing a table containing the accurate information. The information provided below should be used in lieu of that previously published for the City of Kansas City.

(Catalog of Federal Domestic Assistance No. 97.022, ''Flood Insurance.'')

Dated: August 10, 2015.

Roy E. Wright,

Deputy Associate Administrator for Insurance and Mitigation, Department of Homeland Security, Federal Emergency Management Agency.

Community	Community map repository address
Jackson County, MO, and Incorporated Areas	
Maps Available for Inspection Online at: *http://www.fema.gov/preliminaryfloodhazarddata*	
Project: 07–07–0023S Preliminary Date: October 10, 2014	
City of Kansas City	City Hall, Planning and Development, 414 East 12th Street, 15th Floor, Kansas City, MO 64106.

[FR Doc. 2015–21700 Filed 9–1–15; 8:45 am]
BILLING CODE 9110–12–P

DEPARTMENT OF HOMELAND SECURITY

Federal Emergency Management Agency

[Internal Agency Docket No. FEMA–4221–DR; Docket ID FEMA–2015–0002]

West Virginia; Amendment No. 1 to Notice of a Major Disaster Declaration

AGENCY: Federal Emergency Management Agency, DHS.

ACTION: Notice.

SUMMARY: This notice amends the notice of a major disaster declaration for State of West Virginia (FEMA–4221–DR), dated May 21, 2015, and related determinations.

DATES: *Effective Date:* August 5, 2015.

FOR FURTHER INFORMATION CONTACT: Dean Webster, Office of Response and Recovery, Federal Emergency Management Agency, 500 C Street SW., Washington, DC 20472, (202) 646–2833.

SUPPLEMENTARY INFORMATION: The Federal Emergency Management Agency (FEMA) hereby gives notice that pursuant to the authority vested in the Administrator, under Executive Order 12148, as amended, Regis L. Phelan, of FEMA is appointed to act as the Federal Coordinating Officer for this disaster.

This action terminates the appointment of Kari Suzann Cowie as Federal Coordinating Officer for this disaster.

The following Catalog of Federal Domestic Assistance Numbers (CFDA) are to be used for reporting and drawing funds: 97.030, Community Disaster Loans; 97.031, Cora Brown Fund; 97.032, Crisis Counseling; 97.033, Disaster Legal Services; 97.034, Disaster Unemployment Assistance (DUA); 97.046, Fire Management Assistance Grant; 97.048, Disaster Housing Assistance to Individuals and Households In Presidentially Declared Disaster Areas; 97.049, Presidentially Declared Disaster Assistance—Disaster Housing Operations for Individuals and Households; 97.050, Presidentially Declared Disaster Assistance to Individuals and Households—Other Needs; 97.036, Disaster Grants—Public Assistance (Presidentially Declared Disasters); 97.039, Hazard Mitigation Grant.

W. Craig Fugate,

Administrator, Federal Emergency Management Agency.

[FR Doc. 2015–21698 Filed 9–1–15; 8:45 am]
BILLING CODE 9111–23–P

DEPARTMENT OF HOMELAND SECURITY

Federal Emergency Management Agency

[Docket ID FEMA–2015–0001; Internal Agency Docket No. FEMA–B–1531]

Changes in Flood Hazard Determinations

AGENCY: Federal Emergency Management Agency, DHS.

ACTION: Notice.

SUMMARY: This notice lists communities where the addition or modification of Base Flood Elevations (BFEs), base flood depths, Special Flood Hazard Area (SFHA) boundaries or zone designations, or the regulatory floodway (hereinafter referred to as flood hazard determinations), as shown on the Flood Insurance Rate Maps (FIRMs), and where applicable, in the supporting Flood Insurance Study (FIS) reports, prepared by the Federal Emergency Management Agency (FEMA) for each community, is appropriate because of new scientific or technical data. The FIRM, and where applicable, portions of the FIS report, have been revised to reflect these flood hazard determinations through issuance of a Letter of Map Revision (LOMR), in accordance with title 44, part 65 of the Code of Federal Regulations (44 CFR part 65). The LOMR will be used by insurance agents and others to calculate appropriate flood insurance premium rates for new buildings and the contents of those buildings. For rating purposes, the currently effective community number is shown in the table below and must be used for all new policies and renewals.

DATES: These flood hazard determinations will become effective on the dates listed in the table below and revise the FIRM panels and FIS report in effect prior to this determination for the listed communities.

From the date of the second publication of notification of these changes in a newspaper of local circulation, any person has 90 days in which to request through the community that the Deputy Associate Administrator for Mitigation reconsider the changes. The flood hazard determination information may be changed during the 90-day period.

ADDRESSES: The affected communities are listed in the table below. Revised flood hazard information for each community is available for inspection at both the online location and the respective community map repository address listed in the table below. Additionally, the current effective FIRM and FIS report for each community are accessible online through the FEMA Map Service Center at *www.msc.fema.gov* for comparison.

Submit comments and/or appeals to the Chief Executive Officer of the community as listed in the table below.

FOR FURTHER INFORMATION CONTACT: Luis Rodriguez, Chief, Engineering Management Branch, Federal Insurance and Mitigation Administration, FEMA, 500 C Street SW., Washington, DC 20472, (202) 646–4064, or (email) *Luis.Rodriguez3@fema.dhs.gov;* or visit the FEMA Map Information eXchange (FMIX) online at *www.floodmaps.fema.gov/fhm/fmx_main.html.*

SUPPLEMENTARY INFORMATION: The specific flood hazard determinations are not described for each community in this notice. However, the online location and local community map repository address where the flood hazard determination information is available for inspection is provided.

Any request for reconsideration of flood hazard determinations must be submitted to the Chief Executive Officer of the community as listed in the table below.

The modifications are made pursuant to section 201 of the Flood Disaster Protection Act of 1973, 42 U.S.C. 4105, and are in accordance with the National Flood Insurance Act of 1968, 42 U.S.C. 4001 *et seq.,* and with 44 CFR part 65.

The FIRM and FIS report are the basis of the floodplain management measures that the community is required either to adopt or to show evidence of having in effect in order to qualify or remain qualified for participation in the National Flood Insurance Program (NFIP).

These flood hazard determinations, together with the floodplain management criteria required by 44 CFR 60.3, are the minimum that are required. They should not be construed to mean that the community must change any existing ordinances that are more stringent in their floodplain management requirements. The community may at any time enact stricter requirements of its own or pursuant to policies established by other Federal, State, or regional entities. The flood hazard determinations are in accordance with 44 CFR 65.4.

The affected communities are listed in the following table. Flood hazard determination information for each community is available for inspection at both the online location and the respective community map repository address listed in the table below.

Additionally, the current effective FIRM and FIS report for each community are accessible online through the FEMA Map Service Center at *www.msc.fema.gov* for comparison.

(Catalog of Federal Domestic Assistance No. 97.022, ''Flood Insurance.'')

Dated: August 10, 2015.

Roy E. Wright,

Deputy Associate Administrator for Insurance and Mitigation, Department of Homeland Security, Federal Emergency Management Agency.

State and county	Location and case No.	Chief executive officer of community	Community map repository	Online location of letter of map revision	Effective date of modification	Community No.
Idaho:						
Ada	City Of Eagle (15–10–0917P).	The Honorable James Reynolds, Mayor, City of Eagle, 660 East Civic Lane, Eagle, ID 83616.	660 East Civic Lane, Eagle, ID 83616.	*http://www.msc.fema.gov/lomc.*	Nov. 5, 2015 ..	160003
Ada	Unincorporated areas of Ada County (15–10–0917P).	The Honorable Dave Case, District Commissioner, Ada County, 200 W Front Street, 3rd Floor, Boise, ID 83702.	200 West Front Street 3rd Floor, Boise, ID 83702.	*http://www.msc.fema.gov/lomc.*	Nov. 5, 2015 ..	160001
Ada	Unincorporated areas of, Ada County (15–10–0733P).	The Honorable Dave Case, District Commissioner, Ada County, 200 West Front Street, 3rd Floor, Boise, ID 83702.	200 West Front Street, 3rd Floor, Boise, ID 83702.	*http://www.msc.fema.gov/lomc.*	Nov. 6, 2015 ..	160001
Ada	Unincorporated areas of Ada County (15–10–0807P).	The Honorable Dave Case, District Commissioner, Ada County, 200 West Front Street, 3rd Floor, Boise, ID 83702.	200 West Front Street, 3rd Floor, Boise, ID 83702.	*http://www.msc.fema.gov/lomc.*	Oct. 14, 2015	160001
Kootenai ..	Unincorporated areas of Kootenai County (15–10–0478P).	Mr. David Stewart Chairman, Board of County Commissioners, 451 Government Way, Coeur d'Alene, ID 83816.	Assessors Department, Kootenai County Court House, 451 Government Way, Coeur d'Alene, ID 83816.	*http://www.msc.fema.gov/lomc.*	Oct. 29, 2015	160076
Teton	Unincorporated areas of Teton County (15–10–0131P).	The Honorable Bill Leake Chair, Board of Teton County Commissioners, Teton County Courthouse, 150 Courthouse Drive, Driggs, ID 83422.	89 N Main, Suite 6, P. O. Box 763, Driggs, ID 83422.	*http://www.msc.fema.gov/lomc.*	Oct. 16, 2015	160230
Illinois:						
Adams	City Of Quincy (14–05–8464P).	The Honorable Kyle A. Moore, Mayor, City of Quincy, 730 Main Street, Quincy, IL 62301.	Quincy City Hall, 730 Maine Street, Quincy, IL 62301.	*http://www.msc.fema.gov/lomc.*	Oct. 20, 2015	170003
Kane	City Of Elgin (15–05–1616P).	The Honorable Dave Kaptain, Mayor, City of Elgin, 150 Dexter Court, Elgin, IL 60120.	Public Works Department, Engineering Department, 150 Dexter Court, Elgin, IL 60120.	*http://www.msc.fema.gov/lomc.*	Nov. 3, 2015 ..	170087
Kane	Unincorporated areas of Kane County (15–05–1616P).	The Honorable Christopher Lauzen, Kane County Chairman, Kane County Government Center, 719 South Batavia Ave. Building A, Geneva, IL 60134.	Kane County Government Center Building A, Water Resources Department, 719 South Batavia Avenue, Geneva, IL 60134.	*http://www.msc.fema.gov/lomc.*	Nov. 3, 2015 ..	170896
Indiana:						

State and county	Location and case No.	Chief executive officer of community	Community map repository	Online location of letter of map revision	Effective date of modification	Community No.
Allen	City Of Fort Wayne (15–05–3985P).	The Honorable Tom Henry, Mayor, City of Fort Wayne, 200 East Berry Street, Suite 420, Fort Wayne, IN 46802.	200 East Berry Street, Fort Wayne, IN 46802.	*http://www.msc.fema.gov/lomc.*	Nov. 3, 2015	180003
Allen	Unincorporated areas of Allen County (15–05–3985P).	Mr. F. Nelson Peters, Allen County Commissioner, Citizens Square, 200 East Berry Street, Suite 410, Fort Wayne, IN 46802.	200 East Berry Street, Fort Wayne, IN 46802.	*http://www.msc.fema.gov/lomc.*	Nov. 3, 2015	180302
Rush	City Of Rushville (15–05–3870X).	The Honorable Michael P. Pavey, Mayor, City of Rushville, 133 West First Street, Rushville, IN 46173.	Rush County Courthouse, Area Plan Commission, Room 211, 101 East 2nd Street, Rushville, IN 46173.	*http://www.msc.fema.gov/lomc.*	Nov. 11, 2015	180223
Rush	Unincorporated areas of Rush County (15–05–3870X).	Mr. Bruce Levi, Chairman, Rush County Board of Commissioners, Rush County Courthouse, 101 East 2nd Street, Room 102, Rushville, IN 46173.	Rush County Courthouse, Area Plan Commission, Room 211, 101 East 2nd Street, Rushville, IN 46173.	*http://www.msc.fema.gov/lomc.*	Nov. 11, 2015	180421
Kansas:						
Shawnee	Unincorporated areas of Shawnee County (15–07–0760P).	The Honorable Kevin Cook, Chair—Shawnee County Commissioners, County Courthouse, 200 Southeast 7th Street, Topeka, KS 66603.	200 Southeast 7th Street, County Courthouse, Topeka, KS 66603.	*http://www.msc.fema.gov/lomc.*	Nov. 10, 2015	200331
Missouri:						
Jefferson	City Of Crystal City (15–07–0050P).	The Honorable Thomas V Schilly, Mayor, City of Crystal City, 130 Mississippi Avenue, Crystal City, MO 63019.	130 Mississippi Avenue, Debbie Johns, Crystal City, MO 63019.	*http://www.msc.fema.gov/lomc.*	Nov. 9, 2015	290189
Jefferson	City Of Festus (15–07–0050P).	The Honorable Mike Cage, Mayor, City of Festus, 711 West Main, Festus, MO 63028.	950 North Fifth Street, Festus, MO 63028.	*http://www.msc.fema.gov/lomc.*	Nov. 9, 2015	290191
Scott	City Of Scott City (15–07–0234P).	The Honorable Tim Porch, Mayor, City of Scott City, 215 Chester Avenue, City of Scott City, MO 63780.	c/o Building Inspector Robert Hood, 215 Chester Avenue, Scott City, MO 63780.	*http://www.msc.fema.gov/lomc.*	Oct. 14, 2015	290414
Scott	Unincorporated areas of Scott County (15–07–0234P).	The Honorable Jamie Burger, Scott County Presiding Commissioner, 131 South Winchester Street, Benton, Missouri 63736.	131 South Winchester Street, P. O. Box 245, Benton, MO 63736.	*http://www.msc.fema.gov/lomc.*	Oct. 14, 2015	290837
Ohio:						
Cuyahoga	City Of Strongsville (15–05–3955P).	The Honorable Thomas P. Perciak, Mayor, City of Strongsville, 16099 Foltz Parkway, Strongsville, OH 44149.	City Hall, 16099 Foltz Parkway, Strongsville, OH 44149.	*http://www.msc.fema.gov/lomc.*	Nov. 6, 2015	390132

State and county	Location and case No.	Chief executive officer of community	Community map repository	Online location of letter of map revision	Effective date of modification	Community No.
Lorain	City Of Elyria (15–05–2448P).	The Honorable Holly C. Brinda, Mayor, City of Elyria, City Hall, 3rd Floor, 131 Court Street, Elyria, OH 44035.	City Hall, Suite 101, 131 Court Street, Elyria, OH 44035.	*http://www.msc.fema.gov/lomc.*	Oct. 20, 2015	390350
Oregon:						
Multnomah	City Of Portland (15–10–0392P).	The Honorable Charlie Hales, Mayor, City of Portland, 1221 SW 4th Avenue, Room 340, Portland, OR 97204.	1221 SW 4th Avenue, Room 230, Portland, OR 97204.	*http://www.msc.fema.gov/lomc.*	Nov. 13, 2015	410183
Multnomah	City Of Troutdale (15–10–0523P).	The Honorable Doug Daoust, Mayor, City of Troutdale, 219 East Historic Columbia River Highway, Troutdale, OR 97060.	219 East Historic Columbia River Highway, Troutdale, OR 97060.	*http://www.msc.fema.gov/lomc.*	Oct. 28, 2015	410184
Texas:						
Dallas	City Of Hutchins (14–06–3724P).	The Honorable Mario Vasquez, Mayor, City of Hutchins, 321 North Main Street, Hutchins, TX 75141.	City Hall, 321 North Main Street, Hutchins, TX 75141.	*http://www.msc.fema.gov/lomc.*	Nov. 6, 2015 ..	480179
Dallas	City Of Wilmer (14–06–3724P).	The Honorable Casey Burgess, Mayor, City of Wilmer, 128 North Dallas Avenue, Wilmer, TX 75172.	City Hall, 300 Country Club Road, Wylie, TX 75098.	*http://www.msc.fema.gov/lomc.*	Nov. 6, 2015 ..	480190
Dallas.	Unincorporated areas of Dallas County (14–06–3724P).	The Honorable Clay L. Jenkins, Presiding Officer, County Commissioner Court, 411 Elm Street, Dallas, TX 75202.	Dallas County Records Building, 509 Main Street, Dallas, TX 75202.	*http://www.msc.fema.gov/lomc.*	Nov. 6, 2015 ..	480165
Denton	Town Of Hickory Creek (14–06–4263P).	The Honorable John Smith, Mayor, Town of Hickory Creek, 1075 Ronald Reagan Avenue, Hickory Creek, TX 75065.	1075 Ronald Reagan Avenue, Hickory Creek, TX 75065.	*http://www.msc.fema.gov/lomc.*	Oct. 28, 2015	481150
Denton	Unincorporated areas of Denton County (14–06–4263P).	The Honorable Mary Horn, County Judge, Denton County, 1450 East McKinney Street, Denton, Texas 76209.	1505 East McKinney Street, Suite 175, Denton, TX 76209.	*http://www.msc.fema.gov/lomc.*	Oct. 28, 2015	480774
Tarrant	City Of Bedford (14–06–4249P).	The Honorable Jim Griffin, Mayor, City of Bedford, City Hall, 2000 Forest Ridge Drive, Bedford, TX 76021.	Public Works Office, 1813 Reliance Parkway, Bedford, TX 76021.	*http://www.msc.fema.gov/lomc.*	Sept. 20, 2015	480585
Tarrant	City Of Colleyville (14–06–4249P).	The Honorable David Kelly, Mayor, City of Colleyville, City Hall, 100 Main Street, Colleyville, TX 76034.	Public Works Office, 100 Main Street, Colleyville, TX 76034.	*http://www.msc.fema.gov/lomc.*	Sept. 20, 2015	480590

State and county	Location and case No.	Chief executive officer of community	Community map repository	Online location of letter of map revision	Effective date of modification	Community No.
Tarrant	City Of Euless (14–06–4249P).	The Honorable Linda Martin, Mayor, City of Euless, City Hall, 201 North Ector Drive, Euless, TX 76039.	Planning and Engineering Building, 201 North Ector Drive, Euless, TX 76039.	*http://www.msc.fema.gov/lomc.*	Sept. 20, 2015	480593
Washington:						
Pacific	Unincorporated areas of Pacific County (15–10–0999X).	The Honorable Lisa Ayers, Pacific County Commissioner, District 3, P. O. Box 187, 1216 West Robert Bush Drive, South Bend, WA 98586.	300 Memorial Drive, South Bend, WA 98586.	*http://www.msc.fema.gov/lomc.*	Sept. 22, 2015	530126
Wisconsin:						
Trempealeau.	Village Of Strum (15–05–2619P).	The Honorable Dean Boehne, President, Village of Strum, 202 South Fifth Avenue, P. O. Box 25, Strum, WI 54770.	202 South Fifth Avenue, Strum, WI 54770.	*http://www.msc.fema.gov/lomc.*	Nov. 13, 2015	555583
Trempealeau.	Unincorporated areas of Trempealeau County (15–05–2619P).	The Honorable Richard Miller, County Board Chairman Trempealeau County, 36245 Main Street, Whitehall, WI 54773.	36245 Main Street, Whitehall, WI 54773.	*http://www.msc.fema.gov/lomc.*	Nov. 13, 2015	555585

[FR Doc. 2015–21744 Filed 9–1–15; 8:45 am]
BILLING CODE 9110–12–P

DEPARTMENT OF HOMELAND SECURITY

Federal Emergency Management Agency

[Docket ID FEMA–2015–0001]

Changes in Flood Hazard Determinations

AGENCY: Federal Emergency Management Agency, DHS.

ACTION: Final notice.

SUMMARY: New or modified Base (1-percent annual chance) Flood Elevations (BFEs), base flood depths, Special Flood Hazard Area (SFHA) boundaries or zone designations, and/or regulatory floodways (hereinafter referred to as flood hazard determinations) as shown on the indicated Letter of Map Revision (LOMR) for each of the communities listed in the table below are finalized. Each LOMR revises the Flood Insurance Rate Maps (FIRMs), and in some cases the Flood Insurance Study (FIS) reports, currently in effect for the listed communities. The flood hazard determinations modified by each LOMR will be used to calculate flood insurance premium rates for new buildings and their contents.

DATES: The effective date for each LOMR is indicated in the table below.

ADDRESSES: Each LOMR is available for inspection at both the respective Community Map Repository address listed in the table below and online through the FEMA Map Service Center at *www.msc.fema.gov.*

FOR FURTHER INFORMATION CONTACT: Luis Rodriguez, Chief, Engineering Management Branch, Federal Insurance and Mitigation Administration, FEMA, 500 C Street SW., Washington, DC 20472, (202) 646–4064, or (email) *Luis.Rodriguez3@fema.dhs.gov;* or visit the FEMA Map Information eXchange (FMIX) online at *www.floodmaps.fema.gov/fhm/fmx_main.html.*

SUPPLEMENTARY INFORMATION: The Federal Emergency Management Agency (FEMA) makes the final flood hazard determinations as shown in the LOMRs for each community listed in the table below. Notice of these modified flood hazard determinations has been published in newspapers of local circulation and 90 days have elapsed since that publication. The Deputy Associate Administrator for Mitigation has resolved any appeals resulting from this notification.

The modified flood hazard determinations are made pursuant to section 206 of the Flood Disaster Protection Act of 1973, 42 U.S.C. 4105, and are in accordance with the National Flood Insurance Act of 1968, 42 U.S.C. 4001 *et seq.,* and with 44 CFR part 65.

For rating purposes, the currently effective community number is shown and must be used for all new policies and renewals.

The new or modified flood hazard information is the basis for the floodplain management measures that the community is required either to adopt or to show evidence of being already in effect in order to remain qualified for participation in the National Flood Insurance Program (NFIP).

This new or modified flood hazard information, together with the floodplain management criteria required by 44 CFR 60.3, are the minimum that are required. They should not be construed to mean that the community must change any existing ordinances that are more stringent in their floodplain management requirements. The community may at any time enact stricter requirements of its own or pursuant to policies established by other Federal, State, or regional entities.

This new or modified flood hazard determinations are used to meet the floodplain management requirements of the NFIP and also are used to calculate the appropriate flood insurance premium rates for new buildings, and

for the contents in those buildings. The changes in flood hazard determinations are in accordance with 44 CFR 65.4.

Interested lessees and owners of real property are encouraged to review the final flood hazard information available at the address cited below for each community or online through the FEMA Map Service Center at *www.msc.fema.gov.*

(Catalog of Federal Domestic Assistance No. 97.022, ''Flood Insurance.'')

Dated: August 10, 2015.

Roy E. Wright,

Deputy Associate Administrator for Insurance and Mitigation, Department of Homeland Security, Federal Emergency Management Agency.

State and county	Location and case No.	Chief executive officer of community	Community map repository	Effective date of modification	Community No.
Alabama:					
Jefferson (FEMA Docket No.: B–1514).	City of Birmingham (14–04–9133P).	The Honorable William A. Bell, Sr., Mayor, City of Birmingham, 710 North 20th Street, Birmingham, AL 35203.	Planning and Engineering Department, 710 North 20th Street, Birmingham, AL 35203.	Jul. 20, 2015	010116
Jefferson (FEMA Docket No.: B–1514).	City of Irondale (14–04–9133P).	The Honorable Tommy J. Alexander, Mayor, City of Irondale, P.O. Box 100188, Irondale, AL 35210.	City Hall, 101 20th Street South, Irondale, AL 35210.	Jul. 20, 2015	010124
Jefferson (FEMA Docket No.: B–1514).	City of Mountain Brook (14–04–9133P).	The Honorable Lawrence T. Oden, Mayor, City of Mountain Brook, P.O. Box 130009, Mountain Brook, AL 35213.	City Hall, 3928 Montclair Road, Mountain Brook, AL 35213.	Jul. 20, 2015	010128
Alabama: Jefferson (FEMA Docket No.: B–1514).	Unincorporated areas of Jefferson County (14–04–9133P).	The Honorable Jimmie Stephens, Chairman, Jefferson County Commission, 716 Richard Arrington Jr. Boulevard North, Birmingham, AL 35203.	Jefferson County Land Development Department, 716 Richard Arrington Jr. Boulevard North, Birmingham, AL 35203.	Jul. 20, 2015	010217
Washington (FEMA Docket No.: B–1514).	Town of McIntosh (15–04–1284P).	The Honorable Wilbert Dixon, Mayor, Town of McIntosh, P.O. Box 351, McIntosh, AL 36553.	Town Hall, 206 Commerce Street, McIntosh, AL 36553.	Jul. 27, 2015	010525
Washington (FEMA Docket No.: B–1514).	Unincorporated areas of Washington County (15–04–1284P).	The Honorable Allen Bailey, Chairman, Washington County Board of Commissioners, P.O. Box 146, Chatom, AL 36518.	Washington County Engineering Department, 45 Court Street, Chatom, AL 36518.	Jul. 27, 2015	010302
Arkansas: Benton (FEMA Docket No.: B–1509).	City of Rogers (14–06–2125P).	The Honorable Greg Hines, Mayor, City of Rogers, 301 West Chestnut Street, Rogers, AR 72756.	City Hall, 301 West Chestnut Street, Rogers, AR 72756.	Jul. 6, 2015	050013
Colorado: El Paso (FEMA Docket No.: B–1514).	City of Colorado Springs (15–08–0177P).	The Honorable Steve Bach, Mayor, City of Colorado Springs, 30 South Nevada Avenue, Colorado Springs, CO 80903.	City Administration, 30 South Nevada Avenue, Colorado Springs, CO 80903.	Jul. 27, 2015	080060
Florida:					
Manatee (FEMA Docket No.: B–1514).	City of Bradenton (15–04–1364P).	The Honorable Wayne H. Poston, Mayor, City of Bradenton, 101 Old Main Street West, Bradenton, FL 34205.	City Hall, 101 Old Main Street West, Bradenton, FL 34205.	Jul. 14, 2015	120155
Manatee (FEMA Docket No.: B–1514).	Unincorporated areas of Manatee County (15–04–1364P).	The Honorable Betsy Benac, Chair, Manatee County Board of Commissioners, P.O. Box 1000, Bradenton, FL 34206.	Manatee County Building and Development, Services Department, 1112 Manatee Avenue West, Bradenton, FL 34205.	Jul. 14, 2015	120153
Monroe (FEMA Docket No.: B–1514).	Unincorporated areas of Monroe County (15–04–1517P).	The Honorable Danny Kolhage, Mayor, Monroe County, 1100 Simonton Street, Key West, FL 33040.	Monroe County, Department of Planning and Environmental Resources, 2798 Overseas Highway, Marathon, FL 33050.	Jul. 14, 2015	125129
St. Johns (FEMA Docket No.: B–1514).	Unincorporated areas of St. Johns County (14–04–A710P).	The Honorable Rachael L. Bennett, Chair, St. Johns County Board of Commissioners, 500 San Sebastian View, St. Augustine, FL 32084.	St. Johns County Administration, 4040 Lewis Speedway, St. Augustine, FL 32084.	Jul. 15, 2015	125147

State and county	Location and case No.	Chief executive officer of community	Community map repository	Effective date of modification	Community No.
Georgia: Cobb (FEMA Docket No.: B–1514).	Unincorporated areas of Cobb County (14–04–6997P).	The Honorable Tim Lee, Chairman, Cobb County Board of Commissioners, 100 Cherokee Street, Marietta, GA 30090.	Cobb County Water System, 680 South Cobb Drive, Marietta, GA 30060.	Jul. 13, 2015	130052
Kentucky: Fayette (FEMA Docket No.: B–1514).	Lexington-Fayette Urban County Government (14–04–2813P).	The Honorable Jim Gray, Mayor, Lexington-Fayette Urban County Government, 200 East Main Street, Lexington, KY 40507.	Lexington-Fayette Urban County Government Center, 200 East Main Street, 12th Floor, Lexington, KY 40507.	Jul. 21, 2015	210067
Texas:					
Bell (FEMA Docket No.: B–1516).	City of Killeen (14–06–4047P).	The Honorable Scott Cosper, Mayor, City of Killeen, P.O. Box 1329, Killeen, TX 76540.	Building and Inspections Division, 100 East Avenue C Killeen, TX 76541.	Jul. 9, 2015	480031
Bell (FEMA Docket No.: B–1516).	City of Nolanville (14–06–2754P).	The Honorable Dennis Biggs, Mayor, City of Nolanville, P.O. Box 128, Nolanville, TX 76559.	City Hall, 101 North 5th Street, Nolanville, TX 76559.	Jul. 13, 2015	480032
Bell (FEMA Docket No.: B–1509).	City of Temple (13–06–3510P).	The Honorable Danny Dunn, Mayor, City of Temple, 2 North Main Street, Suite 103, Temple, TX 76501.	City Hall, 3210 East Avenue H, Building A, Suite 107, Temple, TX 76501.	Jul. 13, 2015	480034
Bell (FEMA Docket No.: B–1516).	Unincorporated areas of Bell County (14–06–4047P).	The Honorable Jon. H. Burrows, Bell County Judge, P.O. Box 768, Belton, TX 76513.	Bell County Engineer's Office, 206 North Main Steet, Belton, TX 76513.	Jul. 9, 2015	480706
Bexar (FEMA Docket No.: B–1516).	City of San Antonio (14–06–3050P).	The Honorable Ivy R. Taylor, Mayor, City of San Antonio, P.O. Box 839966, San Antonio, TX 78283.	Transportation and Capital Improvements Department, Stormwater Division, 1901 South Alamo Street, 2nd Floor, San Antonio, TX 78204.	Jul. 28, 2015	480045
Bexar (FEMA Docket No.: B–1516).	City of San Antonio (14–06–3615P).	The Honorable Ivy R. Taylor, Mayor, City of San Antonio, P.O. Box 839966, San Antonio, TX 78283.	Transportation and Capital Improvements Department, Stormwater Division, 1901 South Alamo Street, 2nd Floor, San Antonio, TX 78204.	Jul. 16, 2015	480045
Bexar (FEMA Docket No.: B–1516).	City of San Antonio (15–06–0336P).	The Honorable Ivy R. Taylor, Mayor, City of San Antonio, P.O. Box 839966, San Antonio, TX 78283.	Transportation and Capital Improvements Department, Stormwater Division, 1901 South Alamo Street, 2nd Floor, San Antonio, TX 78204.	Jul. 27, 2015	480045
Bexar (FEMA Docket No.: B–1516).	Unincorporated areas of Bexar County (15–06–0336P).	The Honorable Nelson W. Wolff, Bexar County Judge, Paul Elizondo Tower, 101 West Nueva Street, 10th Floor, San Antonio, TX 78205.	Bexar County Public Works Department, 233 North Pecos-La Trinidad Street, Suite 420, San Antonio, TX 78207.	Jul. 27, 2015	480035
Fort Bend (FEMA Docket No.: B–1509).	City of Richmond (15–06–0769P).	The Honorable Evalyn W. Moore, Mayor, City of Richmond, 402 Morton Street, Richmond, TX 77469.	City Hall, 402 Morton Street, Richmond, TX 77469.	Jul. 9, 2015	480231
Fort Bend (FEMA Docket No.: B–1509).	Pecan Grove Municipal Utility District (15–06–0769P).	Mr. Chad Howard, President, Pecan Grove Municipal Utility District, Allen Boone Humphries Robinson LLP, 3200 Southwest Freeway, Suite 2600, Houston, TX 77027.	Pecan Grove Municipal Utility District, Jones and Carter Engineering, 6335 Gulfton Drive, Suite 200, Houston, TX 77081.	Jul. 9, 2015	481486
Harris (FEMA Docket No.: B–1516).	Unincorporated areas of Harris County (14–06–2578P).	The Honorable Edward M. Emmett, Harris County Judge, 1001 Preston Street, Suite 911, Houston, TX 77002.	Harris County Permit Office, 10555 Northwest Freeway, Suite 120, Houston, TX 77092.	Jul. 13, 2015	480287

State and county	Location and case No.	Chief executive officer of community	Community map repository	Effective date of modification	Community No.
Parker (FEMA Docket No.: B–1516).	City of Weatherford (15–06–0035P).	The Honorable Dennis Hooks, Mayor, City of Weatherford 303 Palo Pinto Street, Weatherford, TX 76086.	Utility Department Service Center, 917 Eureka Street, Weatherford, TX 78086.	Jul. 23, 2015	480522
Rockwall (FEMA Docket No.: B–1516).	City of Rockwall (14–06–4684P).	The Honorable Jim Pruitt, Mayor, City of Rockwall, 385 South Goliad Street, Rockwall, TX 75087.	Engineering Department, 385 South Goliad Street, Rockwall, TX 75087.	Jul. 13, 2015	480547
Tarrant (FEMA Docket No.: B–1516).	City of Fort Worth (14–06–3505P).	The Honorable Betsy Price, Mayor, City of Fort Worth, 1000 Throckmorton Street, Fort Worth, TX 76102.	City Hall, 1000 Throckmorton Street, Fort Worth, TX 76102.	Jul. 29, 2015	480596
Tarrant (FEMA Docket No.: B–1509).	City of Keller (14–06–4310P).	The Honorable Mark Mathews, Mayor, City of Keller, P.O. Box 770, Keller, TX 76244.	Public Works Department, 1100 Bear Creek Parkway, Keller, TX 76248.	Jul. 6, 2015	480602

[FR Doc. 2015–21739 Filed 9–1–15; 8:45 am]
BILLING CODE 9110–12–P

DEPARTMENT OF HOMELAND SECURITY

Federal Emergency Management Agency

[Docket ID FEMA–2015–0001; Internal Agency Docket No. FEMA–B–1529]

Proposed Flood Hazard Determinations

AGENCY: Federal Emergency Management Agency, DHS.

ACTION: Notice.

SUMMARY: Comments are requested on proposed flood hazard determinations, which may include additions or modifications of any Base Flood Elevation (BFE), base flood depth, Special Flood Hazard Area (SFHA) boundary or zone designation, or regulatory floodway on the Flood Insurance Rate Maps (FIRMs), and where applicable, in the supporting Flood Insurance Study (FIS) reports for the communities listed in the table below. The purpose of this notice is to seek general information and comment regarding the preliminary FIRM, and where applicable, the FIS report that the Federal Emergency Management Agency (FEMA) has provided to the affected communities. The FIRM and FIS report are the basis of the floodplain management measures that the community is required either to adopt or to show evidence of having in effect in order to qualify or remain qualified for participation in the National Flood Insurance Program (NFIP). In addition, the FIRM and FIS report, once effective, will be used by insurance agents and others to calculate appropriate flood insurance premium rates for new buildings and the contents of those buildings.

DATES: Comments are to be submitted on or before December 1, 2015.

ADDRESSES: The Preliminary FIRM, and where applicable, the FIS report for each community are available for inspection at both the online location and the respective Community Map Repository address listed in the tables below. Additionally, the current effective FIRM and FIS report for each community are accessible online through the FEMA Map Service Center at *www.msc.fema.gov* for comparison.

You may submit comments, identified by Docket No. FEMA–B–1529, to Luis Rodriguez, Chief, Engineering Management Branch, Federal Insurance and Mitigation Administration, FEMA, 500 C Street SW., Washington, DC 20472, (202) 646–4064, or (email) *Luis.Rodriguez3@fema.dhs.gov.*

FOR FURTHER INFORMATION CONTACT: Luis Rodriguez, Chief, Engineering Management Branch, Federal Insurance and Mitigation Administration, FEMA, 500 C Street SW., Washington, DC 20472, (202) 646–4064, or (email) *Luis.Rodriguez3@fema.dhs.gov;* or visit the FEMA Map Information eXchange (FMIX) online at *www.floodmaps.fema.gov/fhm/fmx_main.html.*

SUPPLEMENTARY INFORMATION: FEMA proposes to make flood hazard determinations for each community listed below, in accordance with section 110 of the Flood Disaster Protection Act of 1973, 42 U.S.C. 4104, and 44 CFR 67.4(a).

These proposed flood hazard determinations, together with the floodplain management criteria required by 44 CFR 60.3, are the minimum that are required. They should not be construed to mean that the community must change any existing ordinances that are more stringent in their floodplain management requirements. The community may at any time enact stricter requirements of its own or pursuant to policies established by other Federal, State, or regional entities. These flood hazard determinations are used to meet the floodplain management requirements of the NFIP and also are used to calculate the appropriate flood insurance premium rates for new buildings built after the FIRM and FIS report become effective.

The communities affected by the flood hazard determinations are provided in the tables below. Any request for reconsideration of the revised flood hazard information shown on the Preliminary FIRM and FIS report that satisfies the data requirements outlined in 44 CFR 67.6(b) is considered an appeal. Comments unrelated to the flood hazard determinations also will be considered before the FIRM and FIS report become effective.

Use of a Scientific Resolution Panel (SRP) is available to communities in support of the appeal resolution process. SRPs are independent panels of experts in hydrology, hydraulics, and other pertinent sciences established to review conflicting scientific and technical data and provide recommendations for resolution. Use of the SRP only may be exercised after FEMA and local communities have been engaged in a collaborative consultation process for at least 60 days without a mutually acceptable resolution of an appeal. Additional information regarding the SRP process can be found online at *http://floodsrp.org/pdfs/srp_fact_sheet.pdf.*

The watersheds and/or communities affected are listed in the tables below. The Preliminary FIRM, and where applicable, FIS report for each community are available for inspection

at both the online location and the respective Community Map Repository address listed in the tables. Additionally, the current effective FIRM and FIS report for each community are accessible online through the FEMA Map Service Center at *www.msc.fema.gov* for comparison.

(Catalog of Federal Domestic Assistance No. 97.022, ''Flood Insurance.'')

Dated: August 10, 2015.

Roy E. Wright,

Deputy Associate Administrator for Insurance and Mitigation, Department of Homeland Security, Federal Emergency Management Agency.

I. Non-watershed-based studies:

Community	Community map repository address
Yavapai County, Arizona, and Incorporated Areas	
Maps Available for Inspection Online at: *http://www.fema.gov/preliminaryfloodhazarddata*	
Project: 13–09–0279S Preliminary Date: April 24, 2015	
City of Prescott	Public Works Department, 201 South Cortez Street, Prescott, AZ 86303.
Unincorporated Areas of Yavapai County	Yavapai County Flood Control District Office, 1120 Commerce Drive, Prescott, AZ 86305.

Community	Community map repository address
Sonoma County, California, and Incorporated Areas	
Maps Available for Inspection Online at: *http://www.fema.gov/preliminaryfloodhazarddata*	
Project: 10–09–0037S Preliminary Date: February 23, 2015	
City of Santa Rosa	Engineering Division, 100 Santa Rosa Avenue, Room 3, Santa Rosa, CA 95404.
Unincorporated Areas of Sonoma County	Sonoma County Permit and Resource Management, 2550 Ventura Avenue, Santa Rosa, CA 95403.

Community	Community map repository address
Muscatine County, Iowa and Incorporated Areas	
Maps Available for Inspection Online at: *http://www.fema.gov/preliminaryfloodhazarddata*	
Project: 12–07–0955S Preliminary Date: April 30, 2015	
City of Muscatine	City Hall, Community Development Department, 215 Sycamore Street, Muscatine, IA 52761.
Unincorporated Areas of Muscatine County	Muscatine County Zoning Office, 3610 Park Avenue West, Muscatine, IA 52761.

Community	Community map repository address
Marshall County, Minnesota and Incorporated Areas	
Maps Available for Inspection Online at: *http://www.fema.gov/preliminaryfloodhazarddata*	
Project: 15–05–0583S Preliminary Date: September 30, 2011	
City of Alvarado	City Hall, 155 Marshall Street, Alvarado, MN 56710.
City of Argyle	City Hall, 701 Pacific Avenue, Argyle, MN 56713.
City of Grygla	Grygla Civic Building, 219 West Beltrami Street, Grygla, MN 56727.
Unincorporated Areas of Marshall County	Marshall County Courthouse, 208 East Colvin Avenue, Warren, MN 56762.
City of Middle River	Spruce Valley Community Center, 250 Hill Avenue, Middle River, MN 56737.
City of Newfolden	City Hall, 145 East First Street, Newfolden, MN 56738.
City of Oslo	City Hall, 107 Third Avenue East, Oslo, MN 56744.
City of Stephen	City Hall, 41 Fifth Street, Suite B, Stephen, MN 56757.
City of Warren	City Hall, 120 East Bridge Avenue, Warren, MN 56762.

Community	Community map repository address
Lyon County, Nevada, and Incorporated Areas	
Maps Available for Inspection Online at: *http://www.fema.gov/preliminaryfloodhazarddata*	

Community	Community map repository address
Project: 09–09–3064S Preliminary Date: February 27, 2015	
Unincorporated Areas of Lyon County	27 South Main Street, Yerington, NV 89447.
City of Yerington	102 South Main Street, Yerington, NV 89447.

Community	Community map repository address
Kitsap County, Washington, and Incorporated Areas	
Maps Available for Inspection Online at: *http://www.fema.gov/preliminaryfloodhazarddata*	
Project: 12–10–0360S Preliminary Date: November 18, 2014	
City of Bainbridge Island	Department of Planning and Community Development, 280 Madison Avenue N, Bainbridge Island, WA 98110.
City of Bremerton	Public Works and Utilities, 3027 Olympus Drive, Bremerton, WA 98310.
City of Port Orchard	Department of Community Development, 216 Prospect Street, Port Orchard, WA 98366.
City of Poulsbo	City Hall, 200 NE Moe Street, Poulsbo, WA 98370.
Unincorporated Areas of Kitsap County	Department of Community Development, 614 Division Street, MS–36, Port Orchard, WA 98366.

[FR Doc. 2015–21701 Filed 9–1–15; 8:45 am]

BILLING CODE 9110–12–P

DEPARTMENT OF HOMELAND SECURITY

Federal Emergency Management Agency

[Docket ID FEMA–2015–0001]

Final Flood Hazard Determinations

AGENCY: Federal Emergency Management Agency, DHS.

ACTION: Final notice.

SUMMARY: Flood hazard determinations, which may include additions or modifications of Base Flood Elevations (BFEs), base flood depths, Special Flood Hazard Area (SFHA) boundaries or zone designations, or regulatory floodways on the Flood Insurance Rate Maps (FIRMs) and where applicable, in the supporting Flood Insurance Study (FIS) reports have been made final for the communities listed in the table below.

The FIRM and FIS report are the basis of the floodplain management measures that a community is required either to adopt or to show evidence of having in effect in order to qualify or remain qualified for participation in the Federal Emergency Management Agency's (FEMA's) National Flood Insurance Program (NFIP). In addition, the FIRM and FIS report are used by insurance agents and others to calculate appropriate flood insurance premium rates for buildings and the contents of those buildings.

DATES: The effective date of October 2, 2015 which has been established for the FIRM and, where applicable, the supporting FIS report showing the new or modified flood hazard information for each community.

ADDRESSES: The FIRM, and if applicable, the FIS report containing the final flood hazard information for each community is available for inspection at the respective Community Map Repository address listed in the tables below and will be available online through the FEMA Map Service Center at *www.msc.fema.gov* by the effective date indicated above.

FOR FURTHER INFORMATION CONTACT: Luis Rodriguez, Chief, Engineering Management Branch, Federal Insurance and Mitigation Administration, FEMA, 500 C Street SW., Washington, DC 20472, (202) 646–4064, or (email) *Luis.Rodriguez3@fema.dhs.gov;* or visit the FEMA Map Information eXchange (FMIX) online at *www.floodmaps.fema.gov/fhm/fmx_main.html.*

SUPPLEMENTARY INFORMATION: The Federal Emergency Management Agency (FEMA) makes the final determinations listed below for the new or modified flood hazard information for each community listed. Notification of these changes has been published in newspapers of local circulation and 90 days have elapsed since that publication. The Deputy Associate Administrator for Mitigation has resolved any appeals resulting from this notification.

This final notice is issued in accordance with section 110 of the Flood Disaster Protection Act of 1973, 42 U.S.C. 4104, and 44 CFR part 67. FEMA has developed criteria for floodplain management in floodprone areas in accordance with 44 CFR part 60.

Interested lessees and owners of real property are encouraged to review the new or revised FIRM and FIS report available at the address cited below for each community or online through the FEMA Map Service Center at *www.msc.fema.gov.*

The flood hazard determinations are made final in the watersheds and/or communities listed in the table below.

(Catalog of Federal Domestic Assistance No. 97.022, ''Flood Insurance.'')

Dated: August 10, 2015.

Roy E. Wright,

Deputy Associate Administrator for Insurance and Mitigation, Department of Homeland Security, Federal Emergency Management Agency.

I. Watershed-based studies:

Community	Community map repository address
Narragansett HUC8 Watershed	
Kent County, Rhode Island (All Jurisdiction) Docket No.: FEMA–B–1434	
City of Warwick	Planning Department, 3275 Post Road, Warwick, RI 02886.
Town of Coventry	Department of Public Works, 1675 Flat River Road, Coventry, RI 02816.
Town of East Greenwich	Department of Public Works, 111 Pierce Street, East Greenwich, RI 02818.
Town of West Warwick	Town Hall, 1170 Main Street, West Warwick, RI 02893.
Providence County, Rhode Island (All Jurisdictions) Docket No.: FEMA–B–1434	
City of Central Falls	City Hall, 580 Broad Street, Central Falls, RI 02863.
City of Cranston	City Hall, 869 Park Avenue, Cranston, RI 02910.
City of East Providence	City Hall, 145 Taunton Avenue, East Providence, RI 02914.
City of Pawtucket	Department of Planning and Development, 175 Main Street, Pawtucket, RI 02860.
City of Providence	City Administration Building, 444 Westminster Street, Providence, RI 02903.
Town of Cumberland	Department of Public Works, 45 Broad Street, Cumberland, RI 02864.
Town of Johnston	Town Hall, 1385 Hartford Avenue, Johnston, RI 02919.
Town of Lincoln	Town Hall, 100 Old River Road, Lincoln, RI 02865.
Town of North Providence	Department of Public Works, Two Mafalda Street, North Providence, RI 02911.
Town of North Smithfield	Town Hall, One Main Street, Slatersville, RI 02876.
Town of Scituate	Town Hall, 195 Danielson Pike, North Scituate, RI 02857.
Town of Smithfield	Town Hall, 64 Farnum Pike, Smithfield, RI 02917.
Lower Wisconsin River Watershed	
Sauk County, Wisconsin, and Incorporated Areas Docket No.: FEMA–B–1426	
Unincorporated Areas of Sauk County	West Square Building, 505 Broadway, Baraboo, WI 53913.
Village of Prairie Du Sac	Village Hall, 335 Galena Street, Prairie du Sac, WI 53578.
Village of Sauk City	Village Hall, 726 Water Street, Sauk City, WI 53583.
Village of Spring Green	Village Hall, 154 North Lexington Street, Spring Green, WI 53588.

II. Non-watershed-based studies:

Community	Community map repository address
Carroll County, Maryland, and Incorporated Areas Docket No.: FEMA–B–1246	
City of Taneytown	City Hall, 17 East Baltimore Street, Taneytown, MD 21787.
City of Westminster	City Hall, 56 West Main Street, Westminster, MD 21157.
Town of Hampstead	Town Hall, 1034 South Carroll Street, Hampstead, MD 21074.
Town of Manchester	Town Hall, 3208 York Street, Manchester, MD 21102.
Town of Mount Airy	Town Hall, 110 South Main Street, Mount Airy, MD 21771.
Town of New Windsor	Town Hall, 211 High Street, New Windsor, MD 21776.
Town of Sykesville	Town Hall, 7457 Main Street, Sykesville, MD 21784.
Town of Union Bridge	Town Hall, 104 West Locust Street, Union Bridge, MD 21791.
Unincorporated Areas of Carroll County	Carroll County Office Building, 225 North Center Street, Westminster, MD 21157.
Knox County, Nebraska, and Incorporated Areas Docket No.: FEMA–B–1415	
City of Bloomfield	City Hall, 101 South Broadway, Bloomfield, NE 68718.
City of Crofton	City Hall, 1210 West 2nd Street, Crofton, NE 68730.
Unincorporated Areas of Knox County	Knox County Courthouse, 206 Main Street, Center, NE 68724.

[FR Doc. 2015–21699 Filed 9–1–15; 8:45 am]

BILLING CODE 9110–12–P

DEPARTMENT OF HOMELAND SECURITY

[Docket No. DHS–2015–0055]

Agency Information Collection Activities: National Initiative for Cybersecurity Careers and Studies (NICCS) Cybersecurity Training and Education Catalog (Training/Workforce Development Catalog) Collection

AGENCY: Cybersecurity Education & Awareness Office (CE&A), DHS.

ACTION: 60-Day Notice and request for comments; Reinstatement with change, 1601–0016.

SUMMARY: The Department of Homeland Security, Cybersecurity Education & Awareness Office (CE&A), will submit the following Information Collection Request (ICR) to the Office of Management and Budget (OMB) for review and clearance in accordance with the Paperwork Reduction Act of 1995 (Pub. L. 104–13, 44 U.S.C. Chapter 35).

DATES: Comments are encouraged and will be accepted until November 2, 2015. This process is conducted in accordance with 5 CFR 1320.1

ADDRESSES: You may submit comments, identified by docket number DHS–2015–0055, by one of the following methods:

- Federal eRulemaking Portal: *http://www.regulations.gov.* Please follow the instructions for submitting comments.
- Email: *dhs.pra@hq.dhs.gov* Please include docket number DHS–2015–0055 in the subject line of the message.

SUPPLEMENTARY INFORMATION: Title II, Homeland Security Act, 6 U.S.C. 121(d)(1) To access, receive, and analyze laws enforcement information, intelligence information and other information from agencies of the Federal Government, State and local government agencies . . . and Private sector entities and to integrate such information in support of the mission responsibilities of the Department. The following authorities also permit DHS to collect information of the type contemplated: Federal Information Security Management Act of 2002 (FISMA), 44 U.S.C. 3546; Homeland Security Presidential Directive (HSPD) 7, ''Critical Infrastructure Identification, Prioritization, and Protection'' (2003); and NSPD–54/HSPD–23, ''Cybersecurity Policy'' (2009).

In May 2009, the President ordered a Cyberspace Policy Review to develop a comprehensive approach to secure and defend America's infrastructure. The review built upon the Comprehensive National Cybersecurity Initiative (CNCI).

In response to increased cyber threats across the Nation, the National Initiative for Cybersecurity Education (NICE) expanded from a previous effort, the CNCI #8. NICE formed in March 2011, and is a nationally coordinated effort comprised of over 20 federal departments and agencies, and numerous partners in academia and industry. NICE focuses on cybersecurity awareness, education, training and professional development. NICE seeks to encourage and build cybersecurity awareness and competency across the Nation and to develop an agile, highly skilled cybersecurity workforce.

The NICCS Portal is a national online resource for cybersecurity awareness, education, talent management, and professional development and training. NICCS Portal is an implementation tool for NICE. Its mission is to provide comprehensive cybersecurity resources to the public.

To promote cybersecurity education, and to provide a comprehensive resource for the Nation, NICE developed the Cybersecurity Training and Education Catalog. The Cybersecurity Training and Education Catalog will be hosted on the NICCS Portal. Training Course and certification information will be included in the Training/Workforce Development Catalog. Note: Any information received from the public in support of the NICCS Portal and Cybersecurity Training and Education Catalog is completely voluntary. Organizations and individuals who do not provide information can still utilize the NICCS Portal and Cybersecurity Training and Education Catalog without restriction or penalty. An organization or individual who wants their information removed from the NICCS Portal and/or Cybersecurity Training and Education Catalog can email the NICCS Supervisory Office. There are no requirements for a provider to fill out a specific form for their information to be removed; standard email requests will be honored.

Department of Homeland Security (DHS) Cybersecurity Education & Awareness Office (CE&A) intends for the collected information from the NICCS Cybersecurity Training Course Form and the NICCS Cybersecurity Certification Form to be displayed on a publicly accessible Web site called the National Initiative for Cybersecurity Careers and Studies (NICCS) Portal (*http://niccs.us-cert.gov/*). Collected information from these two forms will be included in the Cybersecurity Training and Education Catalog that is hosted on the NICCS Portal.

The DHS CE&A NICCS Supervisory Office will use information collected from the NICCS Vetting Criteria Form to primarily manage communications with the training/workforce development providers; this collected information will not be shared with the public and is intended for internal use only. Additionally, this information will be used to validate training providers before uploading their training and certification information to the Training Catalog.

The information will be collected via fully electronic or partially electronic means. Collection will be coordinated between the public and DHS CE&A via email (*niccs@hq.dhs.gov*). The following form is fully electronic: NICCS Vetting Criteria Web Form. The following forms are partially electronic: NICCS Cybersecurity Training Course Form and NICCS Certification Course Form. All partially electronic forms are created in excel. The NICCS SO is looking to develop and transition partially electronic forms to fully electronic web forms. This transition is dependent on contract requirements and available department funding. All information collected from the NICCS Cybersecurity Training Course Form, the NICCS Cybersecurity Training Course Web Form, and the NICCS Certification Course Form will be stored in the public accessible NICCS Cybersecurity Training and Education Catalog (*http://niccs.us-cert.gov/training/training-home*). The NICCS Supervisory Office will electronically store information collected via the NICCS Vetting Criteria Form. This information will not be publicly accessible.

There is no assurance of confidentiality provided to the respondents. This collection is covered by the existing Privacy Impact Assessment, DHS General Contact List (DHS/ALL/PIA–006) and the existing Systems of Records Notice, Department of Homeland Security (DHS) Mailing and other Lists Systems (DHS/ALL/SORN–002). DHS CE&A has revised the collection to reflect three changes. These changes include the addition of: Training/WFD Provider Logo, Organization URL and National Cybersecurity Workforce Framework Role collection. These changes were added based on input received from the public. Including provider logos and an organization URL allows users to more easily find organization information. The addition of Cybersecurity Workforce Framework Role information will allow users to better align their courses with specific cybersecurity roles found in the newest Workforce Framework. The adjustments reported

in the estimates of burden were based on historical data and current training provider outreach. The estimate of annualized cost was updated based off of actual wage.

The prior information collection request for OMB No. 1601–0016 was approved through April 30, 2015 by OMB. This collection will be submitted to OMB for review to request reinstatement of the collection. DHS CE&A has revised the collection to reflect three changes. These changes include the addition of: Training/WFD Provider Logo, Organization URL, National Cybersecurity Workforce Framework Role collection. These changes were added based on input received from the public. Including provider logos and an organization URL allows users to more easily find organization information. The addition of Cybersecurity Workforce Framework Role information will allow users to better align their courses with specific cybersecurity roles found in the newest Workforce Framework. The adjustments reported in the estimates of burden were based on historical data and current training provider outreach. The estimate of annualized cost was updated based off of actual wage.

The Office of Management and Budget is particularly interested in comments which:

1. Evaluate whether the proposed collection of information is necessary for the proper performance of the functions of the agency, including whether the information will have practical utility;
2. Evaluate the accuracy of the agency's estimate of the burden of the proposed collection of information, including the validity of the methodology and assumptions used;
3. Enhance the quality, utility, and clarity of the information to be collected; and
4. Minimize the burden of the collection of information on those who are to respond, including through the use of appropriate automated, electronic, mechanical, or other technological collection techniques or other forms of information technology, *e.g.,* permitting electronic submissions of responses.

Analysis

Agency: Cybersecurity Education & Awareness Office, DHS

Title: Agency Information Collection Activities: National Initiative for Cybersecurity Careers and Studies (NICCS) Cybersecurity Training and Education Catalog (Training/Workforce Development Catalog) Collection

OMB Number: 1601–0016

Frequency: On occasion

Affected Public: Private Sector

Number of Respondents: 1000

Estimated Time per Respondent: 2.5 hours

Total Burden Hours: 2,125 hours

Dated: August 27, 2015.

Carlene C. Ileto,

Executive Director, Enterprise Business Management Office.

[FR Doc. 2015–21673 Filed 9–1–15; 8:45 am]

BILLING CODE 9110–9B–P

DEPARTMENT OF HOMELAND SECURITY

Office of the Secretary

[Docket No. DHS–2015–0054]

Privacy Act of 1974; Department of Homeland Security U.S. Customs and Border Protection—DHS/CBP–020 Export Information System (EIS) System of Records.

AGENCY: Privacy Office, Office of the Secretary, Department of Homeland Security.

ACTION: Notice of Privacy Act system of records.

SUMMARY: In accordance with the Privacy Act of 1974, the Department of Homeland Security proposes to issue a new Department of Homeland Security system of records titled, ''Department of Homeland Security/U.S. Customs and Border Protection—DHS/CBP–020 Export Information System System of Records.'' This system of records is used by the Department of Homeland Security/U.S. Customs and Border Protection to collect and maintain records on export commodity and transportation shipment data. Additionally, the Department of Homeland Security is issuing a Notice of Proposed Rulemaking to exempt this system of records from certain provisions of the Privacy Act of 1974, as amended, elsewhere in the **Federal Register**. This system will be included in the Department of Homeland Security's inventory of record systems.

DATES: Submit comments on or before October 2, 2015. This new system will be effective October 2, 2015.

ADDRESSES: You may submit comments, identified by docket number DHS–2015–0054 by one of the following methods:

- *Federal e-Rulemaking Portal: http://www.regulations.gov.* Follow the instructions for submitting comments.
- *Fax:* 202–343–4010.
- *Mail:* Karen L. Neuman, Chief Privacy Officer, Privacy Office, Department of Homeland Security, Washington, DC 20528.

Instructions: All submissions received must include the agency name and docket number for this rulemaking. All comments received will be posted without change to *http://www.regulations.gov,* including any personal information provided.

Docket: For access to the docket to read background documents or comments received, please visit *http://www.regulations.gov.*

FOR FURTHER INFORMATION CONTACT: For general questions, please contact: John Connors (202–344–1610), CBP Privacy Officer, U.S. Customs and Border Protection, Department of Homeland Security, Washington, DC 20229. For privacy questions, please contact: Karen L. Neuman (202–343–1717), Chief Privacy Officer, Privacy Office, Department of Homeland Security, Washington, DC 20528.

SUPPLEMENTARY INFORMATION:

I. Background

In accordance with the Privacy Act of 1974, 5 U.S.C. 552a, the Department of Homeland Security (DHS), U.S. Customs and Border Protection (CBP) proposes to establish a new DHS system of records titled, ''DHS/CBP–020 Export Information System (EIS) System of Records.'' The system of records is used by CBP to collect, use, and maintain paper and electronic records required to track, control, and process cargo exported from the United States. EIS allows CBP to enhance national security, enforce U.S. law, and facilitate legitimate international trade.

CBP is publishing a system of records notice (SORN) for EIS because CBP uses EIS to collect and process information to comply with export laws and facilitate legitimate international trade. CBP is charged with enforcing all U.S. export laws at the border and the exporting community is required to report export data to CBP that contains personally identifiable information (PII).

Subsection (a) of Section 343 of the Trade Act of 2002 (19 U.S.C. 2071) mandates that the Secretary of Homeland Security (formerly the Secretary of Treasury) collect cargo information ''through an electronic data interchange system,'' prior to the departure of the cargo from the United States by any mode of commercial transportation (*see* 19 U.S.C. 2071 note.) Pursuant to statute, CBP promulgated a regulation requiring pre-departure filing of electronic information to allow CBP to examine the data before cargo leaves the United States (*see Electronic Information for Outward Cargo*

Required in Advance of Departure (19 CFR 192.14)). CBP required exporters to provide electronic cargo information through the Automated Export System (AES) to avoid redundancy as specifically mandated by Congress (*see Mandatory Pre-Departure Filing of Export Cargo Information Through the Automated Export System,* 73 FR 32466 (June 9, 2008)).

To comply with the regulation, exporters must file the Electronic Export Information (EEI), formerly the Shipper's Export Declaration (SED) [1] when the value of the commodity classified under each individual Schedule B number is over $2,500 or if a validated export license is required to export the commodity. The exporter is responsible for preparing the EEI and the carrier files it with CBP through the AES or AES Direct (operated by the Department of Commerce, U.S. Census Bureau). Cargo information collected by CBP includes PII such as a shipper's name, address, and tax identifying number (TIN).

According to the U.S. Census Bureau, in a standard export transaction, it is the U.S. Principal Party in Interest's (USPPI) responsibility to prepare the EEI. However, the USPPI can give freight forwarders a power of attorney (POA) or written statement (WA) authorizing them to prepare and file the EEI on their behalf. In a routed export transaction, however, the Foreign Principal Party in Interest (FPPI) must provide a POA or WA to prepare the EEI to either the USPPI or a U.S. Authorized Agent.

The Internal Transaction Number (ITN) or exemption citation must be provided by the EEI filer to the carrier when the goods are presented for export. The carrier is responsible for providing the ITN or exemption citation to CBP. CBP Officers will verify that the ITN or exemption citations clearly stated on export documents and provided to the carrier(s) within the prescribed timeframes. The procedures for filing vary by cargo type (vessel, truck, air, or rail). The timeframes for filing varies according to the method of transportation for pre-departure filing (State Department United States Munitions List (USML) shipments and non-USML shipments).

CBP is publishing this system of records notice to provide notice of the records maintained by CBP concerning individuals who participate in exporting goods from the United States. CBP previously published a Privacy Impact Assessment (PIA) for EIS last year.[2]

Consistent with DHS's information-sharing mission, information stored in the DHS/CBP–020 EIS System of Records may be shared with other DHS Components that have a need to know the information to carry out their national security, law enforcement, immigration, intelligence, or other homeland security functions. In addition, information may be shared with appropriate federal, state, local, tribal, territorial, foreign, or international government agencies or other parties consistent with the routine uses set forth in this SORN. In particular, information may be shared with the U.S. Department of Commerce, Bureau of Industry and Security, and the U.S. Department of State, Directorate of Defense Trade Controls, relating to compliance and enforcement of licenses issued by these respective agencies concerning the controlled nature or sensitive technology present in the exported commodities (*e.g.,* certain central processing unit designs, weapons systems).

Additionally, DHS is issuing a Notice of Proposed Rulemaking elsewhere in the **Federal Register** to exempt this system of records from certain provisions of the Privacy Act. This system will be included in DHS's inventory of record systems.

II. Privacy Act

The Privacy Act embodies fair information practice principles in a statutory framework that govern the means by which federal agencies collect, maintain, use, and disseminate individuals' records. The Privacy Act applies to information that is maintained in a ''system of records.'' A ''system of records'' is a group of any records under the control of an agency from which information is retrieved by the name of an individual or by some identifying number, symbol, or other identifying particular assigned to the individual. An individual is defined in the Privacy Act to encompass U.S. citizens and lawful permanent residents. As a matter of policy, DHS extends administrative Privacy Act protections to all persons when systems of records maintain information on U.S. citizens, lawful permanent residents, and foreign nationals.

Below is the description of the DHS/CBP–020 EIS System of Records.

In accordance with 5 U.S.C. 552a(r), DHS has provided a report of this system of records to the Office of Management and Budget and to Congress.

System of Records

Department of Homeland Security (DHS)/U.S. Customs and Border Protection (CBP)–020

SYSTEM NAME:

DHS/CBP–020 Export Information System (EIS) System.

SECURITY CLASSIFICATION:

Unclassified.

SYSTEM LOCATION:

Records are maintained at the CBP Headquarters in Washington, DC, and field offices.

CATEGORIES OF INDIVIDUALS COVERED BY THE SYSTEM:

The categories of individuals covered by the system are DHS or CBP employees and individuals who process and ensure the compliance of goods exported from the United States. Those individuals who process and ensure the compliance of exported goods include: The filer or transmitter of the information; the exporter or U.S. Principal Party in Interest (USPPI); the freight forwarder, or other U.S. authorized agent filing for the USPPI; the shipper; the intermediate consignee, who is the agent for the exporter in the foreign country; the ultimate consignee, who is the person, party, or designee located abroad that will receive the export shipment; and individuals related to the specific commodity (*e.g.,* for hazardous material, an emergency point of contact).

CATEGORIES OF RECORDS IN THE SYSTEM:

EIS contains records that include the following information:

- Information about the filer, exporter, USPPI, ultimate consignee, or authorized U.S. agent, which may include:
  - Full name;
  - Tax Identification Number (TIN) or other trade identifiers;
  - Telephone numbers;
  - Email addresses;
  - Addresses and zip codes;
  - Certificate or license numbers (including licenses issued by various federal agencies);
  - Signatures; and
  - License certifier or other registration numbers.

[1] 13 U.S.C. 301 (Department of Commerce, U.S. Census Bureau root authority to collect the SED, now EEI); pursuant to section 303, CBP (then U.S. Customs Service, Dept. of Treasury) is required to develop an automated system for collecting this export data. Through title 13, the Census Bureau holds stewardship of export data. Under the Trade Act of 2002 (19 U.S.C. 2071 note), CBP is required to collect an export manifest containing a declaration identifying the parties to the transaction, a physical description of the commodity, its quantity, mode of conveyance, and ports of origin and destination. Through title 19, CBP, similarly, holds stewardship of export data.

[2] *http://www.dhs.gov/publication/export-information-system-eis.*

• Information about the DHS/CBP employee annotating the record or ensuring compliance with export control regulations, which may include:
○ Full Name;
○ Identification number or badge number.
• Shipment information:
○ Mode of transportation;
○ Carrier;
○ Origin, port of export, port of unlading, and destination;
○ Date of export; and
○ Hazardous material indicator.
• Commodity information:
o Description, which may include the make, model, serial number, caliber, manufacturer, or hazardous material description;
○ Quantity;
○ Value;
○ Weight;
○ License, certification document, export license, or Kimberly Process Certificate numbers; [3]
○ Vehicle title numbers;
○ Vehicle identification number (VIN);
○ Certificate or license registrant's number; and
○ Hazardous material emergency contact name and telephone number.

AUTHORITY FOR MAINTENANCE OF THE SYSTEM:

Pursuant to 19 U.S.C. 482, 1467, 1581(a) and the Security and Accountability for Every (SAFE) Port Act of 2006, Public Law 109–347, 120 Stat. 1884 (Oct. 13, 2006); CBP has the authority to board vessels or vehicles and conduct searches of cargo; pursuant to 46 U.S.C. 60105, vessels must obtain clearance from CBP prior to departing from the United States for a foreign port or place; and pursuant to 19 U.S.C. 1431, CBP collects and reviews data for outbound cargo in EIS to ensure compliance with laws CBP is charged with enforcing. Subsection (a) of Section 343 of the Trade Act of 2002 mandated that the Secretary of Homeland Security (formerly the Secretary of Treasury) collect cargo information ''through an electronic data interchange system,'' prior to the departure of the cargo from the United States. *See* 19 U.S.C. 2071 note and 19 CFR 192.14. EIS includes the data collected in AES/ACE and from paper forms and documents, as CBP moves from paper to an entirely electronic collection process.

The export laws CBP enforces include:

• The Tariff Act of 1930, as amended, 19 U.S.C. Chapter 4;

• 13 U.S.C. 301–307 (Collection and Publication of Foreign Commerce and Trade Statistics) of 1962, Public Law 87–826, 76 Stat. 951, as amended;

• The Prosecutorial Remedies and Other Tools to End the Exploitation of Children Today (PROTECT) Act of 2003, Public Law 108–21, 117 Stat. 650, as amended, 18 U.S.C. 2251–2256; and 18 U.S.C. 1461, 1463, 1465, and 1466 (relating to obscenity and child pornography);

• The Anti Car Theft Act of 1992, Public Law 102–519, 106 Stat. 3384, 19 U.S.C. 1646b, 1646c;

• The Clean Diamond Trade Act (2003), Public Law 108–19, 117 Stat. 631, 19 U.S.C. 3901–3913;

• The Federal Food, Drug, and Cosmetic Act (1938), Public Law 75–717, 52 Stat. 1040, as amended, 21 U.S.C. 301–399;

• The Controlled Substances Import and Export Act (1970), Public Law 91–513, 84 Stat. 1236, as amended, 21 U.S.C. 953;

• The Arms Export Control Act of 1979, Public Law 90–629, 82 Stat. 1320, as amended, 22 U.S.C. 2778, 2780, and 2781;

• The Currency and Foreign Transactions Reporting Act of 1970 (commonly referred to as the Bank Secrecy Act), Public Law 91–508, 84 Stat. 1122, as amended, 31 U.S.C. 5311, *et seq.*;

• The Atomic Energy Act of 1954, Public Law 83–703, 68 Stat. 919, as amended, 42 U.S.C. 2011, 2077, 2122, 2131, 2138, 2155–2157;

• The Trading With the Enemy Act of 1917, Public Law 65–91, 40 Stat. 411, as amended, 50 U.S.C. App. 1–44;

• The International Emergency Economic Powers Act (1977), Public Law 95–223, 91 Stat. 1628, as amended, 50 U.S.C. 1701–1706;

• The Export Administration Regulations, 15 CFR parts 730–744;

• The Lanham Act (Trademark Act of 1946), Public Law 79–489, 60 Stat. 427, as amended, 15 U.S.C. 1051, *et seq.*; and

• The Endangered Species Act of 1973, Public Law 93–205, 87 Stat. 884, as amended, 16 U.S.C. 1531, *et seq.*

PURPOSE(S):

The purpose of EIS is to be the central point through which CBP collects and maintains export data and related records to facilitate DHS's law enforcement and border security missions. DHS uses EIS as a tool to further its mission to ensure the safety and security of cargo, prevent smuggling, and enforce export and other applicable U.S. laws.

ROUTINE USES OF RECORDS MAINTAINED IN THE SYSTEM, INCLUDING CATEGORIES OF USERS AND THE PURPOSES OF SUCH USES:

Consistent with the purposes noted above, or as otherwise authorized by law, and in addition to those disclosures generally permitted under 5 U.S.C. 552a(b) of the Privacy Act, all or a portion of the records or information contained in this system may be disclosed outside DHS as a routine use pursuant to 5 U.S.C. 552a(b)(3) as follows:

A. To the Department of Justice (DOJ), including Offices of the U.S. Attorney, or other federal agency conducting litigation or in proceedings before any court, adjudicative, or administrative body, when it is relevant or necessary to the litigation and one of the following is a party to the litigation or has an interest in such litigation:

1. DHS or any Component thereof;
2. Any employee or former employee of DHS in his or her official capacity;
3. Any employee or former employee of DHS in his or her individual capacity when DOJ or DHS has agreed to represent the employee; or
4. The United States or any agency thereof.

B. To a congressional office from the record of an individual in response to an inquiry from that congressional office made pursuant to a written Privacy Act waiver at the request of the individual to whom the record pertains.

C. To the National Archives and Records Administration (NARA) or General Services Administration pursuant to records management inspections being conducted under the authority of 44 U.S.C. 2904 and 2906.

D. To an agency or organization for the purpose of performing audit or oversight operations as authorized by law, but only such information as is necessary and relevant to such audit or oversight function.

E. To appropriate agencies, entities, and persons when:

1. DHS suspects or has confirmed that the security or confidentiality of information in the system of records has been compromised;
2. DHS has determined that as a result of the suspected or confirmed compromise, there is a risk of identity theft or fraud, harm to economic or property interests, harm to an individual, or harm to the security or integrity of this system or other systems or programs (whether maintained by DHS or another agency or entity) that rely upon the compromised information; and
3. The disclosure made to such agencies, entities, and persons is reasonably necessary to assist in

[3] A Kimberly Process Certificate number is a control number issued on each Kimberly Diamond Process certificate pursuant to the Clean Diamond Trade Act (2003), Public Law 108–19, 117 Stat. 631, 19 U.S.C. 3901–3913.

connection with DHS's efforts to respond to the suspected or confirmed compromise and prevent, minimize, or remedy such harm.

F. To contractors and their agents, grantees, experts, consultants, and others performing or working on a contract, service, grant, cooperative agreement, or other assignment for DHS, when necessary to accomplish an agency function related to this system of records. Individuals who are provided information under this routine use are subject to the same Privacy Act requirements and limitations on disclosure as are applicable to DHS officers and employees.

G. To appropriate federal, state, local, tribal, or foreign governmental agencies or multilateral governmental organizations responsible for investigating or prosecuting the violations of, or for enforcing or implementing a statute, rule, regulation, order, license, or treaty when DHS believes the information would assist the enforcement of civil or criminal laws.

H. To the Department of Commerce, U.S. Census Bureau to fulfill its statutory mandate of collecting international trade statistics.

I. To federal agencies, pursuant to the International Trade Data System Memorandum of Understanding, consistent with the receiving agency's legal authority to collect information pertaining to or regulating transactions to ensure cargo safety and security, or to prevent smuggling.

J. To appropriate federal, state, local, tribal, or foreign governmental agencies or multilateral governmental organizations when DHS reasonably believes there to be a threat or potential threat to national or international security and for which the information may be relevant in countering the threat or potential threat.

K. To a federal, state, tribal, or local agency, or other appropriate entity or individual, or foreign governments, in order to provide relevant information related to intelligence, counterintelligence, or antiterrorism activities authorized by U.S. law, Executive Order, or other applicable national security directive.

L. To an organization or individual in either the public or private sector, either foreign or domestic, when there is a reason to believe that the recipient is or could become the target of a particular terrorist activity or conspiracy, or when the information is relevant and necessary to the protection of life or property.

M. To a court, magistrate, or administrative tribunal in the course of presenting evidence, including disclosures to opposing counsel or witnesses in the course of civil discovery, litigation, or settlement negotiations, in response to a subpoena, or in connection with criminal law proceedings;

N. To third parties during the course of a law enforcement investigation to the extent necessary to obtain information pertinent to the investigation.

O. To a former employee of DHS, in accordance with applicable regulations, for purposes of responding to an official inquiry by a federal, state, or local government entity or professional licensing authority; or facilitating communications with a former employee that may be necessary for personnel-related or other official purposes when DHS requires information or consultation assistance from the former employee regarding a matter within that person's former area of responsibility;

P. To an appropriate federal, state, local, tribal, foreign, or international agency, if the information is relevant to a requesting agency's decision concerning the hiring or retention of an individual, or issuance of a security clearance, license, contract, grant, or other benefit, or if the information is relevant to a DHS decision concerning the hiring or retention of an employee, the issuance of a security clearance, the reporting of an investigation of an employee, the letting of a contract, or the issuance of a license, grant, or other benefit.

Q. To appropriate federal, state, local, tribal, or foreign governmental agencies or multilateral governmental organizations for the purpose of protecting the vital health interests of a data subject or other persons (*e.g.,* to assist such agencies or organizations in preventing exposure to or transmission of a communicable or quarantinable disease or to combat other significant public health threats). Appropriate notice will be provided of any identified health threat or risk.

R. To the public, certain outbound manifest information, including the name and address of the shipper; general character, size, weight, and description of the cargo; the name of the vessel or carrier; the port of exit; the port of destination; and country of destination; and which may be made public pursuant to 19 U.S.C. 1431, 46 U.S.C. 60105, and 19 CFR 103.31.

S. To organizations engaged in theft prevention activities regarding certain outbound manifest information regarding vehicles, as authorized pursuant to 19 U.S.C. 1627a.

T. To the news media and the public, with the approval of the Chief Privacy Officer in consultation with counsel, when there exists a legitimate public interest in the disclosure of the information or when disclosure is necessary to preserve confidence in the integrity of DHS or is necessary to demonstrate the accountability of DHS's officers, employees, or individuals covered by the system, except to the extent it is determined that release of the specific information in the context of a particular case would constitute an unwarranted invasion of personal privacy.

DISCLOSURE TO CONSUMER REPORTING AGENCIES:

None.

POLICIES AND PRACTICES FOR STORING, RETRIEVING, ACCESSING, RETAINING, AND DISPOSING OF RECORDS IN THE SYSTEM:

STORAGE:

CBP stores records in this system electronically or on paper in secure facilities in a locked drawer behind a locked door. The records may be stored on magnetic disc, tape, digital media, and CD–ROM.

RETRIEVABILITY:

CBP retrieves records by name, address, telephone number, search terms, or TIN.

SAFEGUARDS:

CBP safeguards records in this system in accordance with applicable rules and policies, including all applicable DHS automated systems security and access policies. CBP imposes strict controls to minimize the risk of compromising the information it stores. CBP limits access to the computer system containing the records in this system to those individuals who have a need to know the information for the performance of their official duties and who have appropriate clearances or permissions.

RETENTION AND DISPOSAL:

CBP retains EIS data, including AES/ACE data, in an active status for five years. The data is retained for an additional ten years to meet any requirements of a controlling U.S. Government agency for licensed shipments or for law enforcement purposes. The data is archived after five years and deleted after the additional ten year period, in conformance with the EIS retention procedures. CBP retains information beyond fifteen years when specific EIS data is needed for the duration of a law enforcement investigation or judicial proceeding, when the investigation or proceeding continues beyond fifteen years.

SYSTEM MANAGER AND ADDRESS:

Chief, Export Control Branch, Office of Field Operations, U.S. Customs and Border Protection Headquarters, 1300 Pennsylvania Avenue NW., Washington, DC 20229.

NOTIFICATION PROCEDURE:

The Secretary of Homeland Security has exempted this system from the notification, access, accounting, and amendment procedures of the Privacy Act because it is a law enforcement system. However, DHS/CBP will consider individual requests to determine whether or not information may be released. Individuals seeking notification of and access to any record contained in this system of records, or seeking to contest its content, may submit a request in writing to the Headquarters or component's Freedom of Information Act Officer, whose contact information can be found at *http://www.dhs.gov/foia* under ''Contacts.'' If an individual believes more than one component maintains Privacy Act records concerning him or her, the individual may submit the request to the Chief Privacy Officer and Chief FOIA Officer, Department of Homeland Security, 245 Murray Drive, SW., Building 410, STOP–0655, Washington, DC 20528.

When individuals seek records about themselves from this system of records or any other Departmental system of records, their requests must conform with the Privacy Act regulations set forth in 6 CFR part 5. They must first verify their identities, meaning that they must provide their full names, current addresses, and dates and places of birth. They must sign their requests, and each of their signatures must either be notarized or be submitted under 28 U.S.C. 1746, a law that permits statements to be made under penalty of perjury as a substitute for notarization. While no specific form is required, they may obtain forms for this purpose from the Chief Privacy Officer and Chief FOIA Officer, *http://www.dhs.gov/foia* or 1–866–431–0486. In addition, they should:

- Explain why the Department would have information about them;
- Identify which component(s) of the Department would have the information;
- Specify when the records would have been created; and
- Provide any other information that will help the FOIA staff determine which DHS component agency may have responsive records.

If the individuals' requests seek records pertaining to another living person, they must include a statement from that individual certifying his/her agreement for them to have access to his/her records.

Without the above information the component(s) may not be able to conduct an effective search and a request may be denied due to lack of specificity or lack of compliance with applicable regulations.

RECORD ACCESS PROCEDURES:

See ''Notification procedure'' above.

CONTESTING RECORD PROCEDURES:

See ''Notification procedure'' above.

RECORD SOURCE CATEGORIES:

CBP obtains records from individuals who participate in exporting goods from the United States and other federal agencies, as required to administer the export laws of the United States.

EXEMPTIONS CLAIMED FOR THE SYSTEM:

DHS/CBP is not requesting an exemption with respect to information maintained in the system as it relates to data submitted by or on behalf of an individual. Information in the system may be shared pursuant to the exceptions under the Privacy Act (5 U.S.C. 552a(b)) and the above routine uses. The Privacy Act requires DHS to maintain an accounting of the disclosures made pursuant to all routines uses. Disclosing the fact that a law enforcement or intelligence agency has sought particular records may affect ongoing law enforcement activity. Therefore, pursuant to 5 U.S.C. 552a(j)(2), DHS will claim exemption from sections (c)(3), (e)(8), and (g)(1) of the Privacy Act of 1974, as amended, as is necessary and appropriate to protect this information. In addition, pursuant to 5 U.S.C. 552a(k)(2), DHS will claim exemption from section (c)(3) of the Privacy Act of 1974, as amended, as is necessary and appropriate to protect this information.

Dated: August 19, 2015.

Karen L. Neuman,

Chief Privacy Officer, Department of Homeland Security.

[FR Doc. 2015–21675 Filed 9–1–15; 8:45 am]

BILLING CODE 4410–10–P

DEPARTMENT OF HOMELAND SECURITY

U.S. Citizenship and Immigration Services

[OMB Control Number 16150001]

Agency Information Collection Activities: Petition for Alien Fiancé (e), Form I–129F; Revision of a Currently Approved Collection

AGENCY: U.S. Citizenship and Immigration Services, Department of Homeland Security.

ACTION: 30-Day Notice.

SUMMARY: The Department of Homeland Security (DHS), U.S. Citizenship and Immigration Services (USCIS) will be submitting the following information collection request to the Office of Management and Budget (OMB) for review and clearance in accordance with the Paperwork Reduction Act of 1995. The information collection notice was previously published in the **Federal Register** on July 10, 2015 at 80 FR 39801 allowing for a 60-day public comment period. USCIS received one comment in connection with the 60-day notice.

DATES: The purpose of this notice is to allow an additional 30 days for public comments. Comments are encouraged and will be accepted until October 2, 2015. This process is conducted in accordance with 5 CFR 1320.10.

ADDRESSES: Written comments and/or suggestions regarding the item(s) contained in this notice, especially regarding the estimated public burden and associated response time, must be directed to the OMB USCIS Desk Officer via email at *oira_submission@omb.eop.gov.* Comments may also be submitted via fax at (202) 395–5806. All submissions received must include the agency name and the OMB Control Number 1615–0001.

You may wish to consider limiting the amount of personal information that you provide in any voluntary submission you make. For additional information please read the Privacy Act notice that is available via the link in the footer of *http://www.regulations.gov.*

FOR FURTHER INFORMATION CONTACT: USCIS, Office of Policy and Strategy, Regulatory Coordination Division, Laura Dawkins, Chief, 20 Massachusetts Avenue NW., Washington, DC 20529–2140, Telephone number (202) 272–8377 (comments are not accepted via telephone message). Please note contact information provided here is solely for questions regarding this notice. It is not for individual case status inquiries. Applicants seeking information about

the status of their individual cases can check Case Status Online, available at the USCIS Web site at *http://www.uscis.gov,* or call the USCIS National Customer Service Center at (800) 375–5283; TTY (800) 767–1833.

SUPPLEMENTARY INFORMATION:

Comments:

You may access the information collection instrument with instructions, or additional information by visiting the Federal eRulemaking Portal site at: *http://www.regulations.gov* and enter USCIS–1615–0001 in the search box. Written comments and suggestions from the public and affected agencies should address one or more of the following four points:

(1) Evaluate whether the proposed collection of information is necessary for the proper performance of the functions of the agency, including whether the information will have practical utility;

(2) Evaluate the accuracy of the agency's estimate of the burden of the proposed collection of information, including the validity of the methodology and assumptions used;

(3) Enhance the quality, utility, and clarity of the information to be collected; and

(4) Minimize the burden of the collection of information on those who are to respond, including through the use of appropriate automated, electronic, mechanical, or other technological collection techniques or other forms of information technology, *e.g.,* permitting electronic submission of responses.

Overview of This Information Collection

(1) *Type of Information Collection Request:* Revision of a Currently Approved Collection.

(2) *Title of the Form/Collection:* Petition for Alien Fiancé (e).

(3) *Agency form number, if any, and the applicable component of the DHS sponsoring the collection:* Form I–129F; USCIS.

(4) *Affected public who will be asked or required to respond, as well as a brief abstract: Primary:* Individuals or households. Form I–129F must be filed with USCIS by a citizen of the United States in order to petition for an alien fiancé (e), spouse, or his/her children.

(5) *An estimate of the total number of respondents and the amount of time estimated for an average respondent to respond:* The estimated total number of respondents for the information collection I–129F is approximately 43,819 and the estimated hour burden per response is 3 hours per response; and the estimated number of respondents providing biometrics is 43,819 and the estimated hour burden per response is 1.17 hours.

(6) *An estimate of the total public burden (in hours) associated with the collection:* The total estimated annual hour burden associated with this collection is 182,725 hours.

(7) *An estimate of the total public burden (in cost) associated with the collection:* The estimated total annual cost burden associated with this collection of information is $171.50.

Dated: August 27, 2015.

Laura Dawkins,

Chief, Regulatory Coordination Division, Office of Policy and Strategy, U.S. Citizenship and Immigration Services, Department of Homeland Security.

[FR Doc. 2015–21789 Filed 9–1–15; 8:45 am]

BILLING CODE 9111–97–P

DEPARTMENT OF THE INTERIOR

Fish and Wildlife Service

FWS–R3–ES–2015–N164; FXES11130300000–154–FF03E00000]

Endangered and Threatened Wildlife and Plants; Permit Applications

AGENCY: Fish and Wildlife Service, Interior.

ACTION: Notice of availability of permit applications; request for comments.

SUMMARY: We, the U.S. Fish and Wildlife Service, invite the public to comment on the following applications to conduct certain activities with endangered species. With some exceptions, the Endangered Species Act (Act) prohibits activities with endangered or threatened species unless a Federal permit allows such activity. The Act requires that we invite public comment before issuing these permits.

DATES: We must receive any written comments on or before October 2, 2015.

ADDRESSES: Send written comments by U.S. mail to the Regional Director, Attn: Carlita Payne, U.S. Fish and Wildlife Service, Ecological Services, 5600 American Blvd. West, Suite 990, Bloomington, MN 55437–1458; or by electronic mail to *permitsR3ES@fws.gov.*

FOR FURTHER INFORMATION CONTACT: Carlita Payne, (612) 713–5343.

SUPPLEMENTARY INFORMATION:

Background

We invite public comment on the following permit applications for certain activities with endangered species authorized by section 10(a)(1)(A) of the Act (16 U.S.C. 1531 *et seq.*) and our regulations governing the taking of endangered species in the Code of Federal Regulations (CFR) at 50 CFR part 17. Submit your written data, comments, or request for a copy of the complete application to the mailing address or email address shown in **ADDRESSES**.

Permit Applications

Permit Application Number: TE71516B

Applicant: Olsson Associates, Overland Park, KS

The applicant requests a permit to take (capture and release) Topeka shiner (*Notropis topeka*) in the State of Missouri. Proposed activities are for the recovery and enhancement of survival of the species in the wild.

Permit Application Number: TE71041B

Applicant: Iwona Kuczynska, Richmond Heights, MO

The applicant requests a permit to take (capture and release, conduct non-lethal sampling, radio-tag, and band) Indiana bat (*Myotis sodalis*) and northern long-eared bat (*Myotis septentrionalis*) throughout the range of each species. Proposed activities are for the recovery and enhancement of survival of the species in the wild.

Permit Application Number: TE71021B

Applicant: Indiana Department of Natural Resources, Edinburgh, IN

The applicant requests a permit to take (transport, relocate, reintroduce, and augment) northern riffleshell (*Epioblasma torulosa rangiana*) and clubshell (*Pleurobema clava)* in the States of Pennsylvania and Indiana. Proposed activities are for the recovery and enhancement of survival of the species in the wild.

Permit Application Number: TE71044B

Applicant: Joshua Hassler, Meadville, PA

The applicant requests a permit to take (capture and release, conduct nonlethal sampling, radio-tag, and band) Indiana bat (*Myotis sodalis*) and northern long-eared bat (*Myotis septentrionalis*) throughout the range of each species. Proposed activities are for the recovery and enhancement of survival of the species in the wild.

Permit Application Number: TE11035A

Applicant: Robert Vande Kopple, University of Michigan, Pellston, MI

The applicant requests a renewal to take (capture and release) Hungerford's crawling water beetle (*Brychius hungerfordi*) throughout the species' range in Michigan and Wisconsin.

Proposed activities are for the recovery and enhancement of survival of the species in the wild.

Permit Application Number: TE71737A

Applicant: Huff & Huff, Inc., Oak Brook, IL

The applicant requests a permit renewal, with amendments to the existing permit, to take (capture and release) fanshell (*Cyprogenia stegaria*), northern riffleshell (*Epioblasma torulosa rangiana*), pink mucket (*Lampsilis abrupta*), clubshell (*Pleurobema clava*), rayed bean (*Villosa fabalis*), fat pocketbook (*Potamilus capax*), and rabbitsfoot (*Quadrula cylindrica cylindrica*), and add the States of Ohio and Illinois. Proposed activities are for the recovery and enhancement of survival of the species in the wild.

Permit Application Number: TE72089B

Applicant: Michigan Technological University, Houghton, MI

The applicant requests a permit renewal to take (capture and release, chemically immobilize, radio collar, track, and salvage) gray wolf (*Canis lupus*) in the State of Michigan. Proposed activities are for the recovery and enhancement of survival of the species in the wild.

Permit Application Number: TE72093B

Applicant: Rebecca Winterringer, Euclid, OH

The applicant requests a permit to take (capture and release) spectaclecase (*Cumberlandia mondonata*), fanshell (*Cyprogenia stegaria*), snuffbox (*Epioblasma triquetra*), Higgins eye (*Lampsilis higginsii*), pink mucket pearly mussel (*Lampsilis abrupta*), sheepnose (*Plethobasus cyphyus*), fat pocketbook (*Potamilus capax*), clubshell (*Pleurobema clava*), rayed bean (*Villosa fabalis*), rabbitsfoot (*Quadrula cylindrica cylindrica*), northern riffleshell (*Epioblasma torulosa rangiana*), purple cat's paw pearlymussel (*Epioblasma obliquata obliquata*), white cat's paw pearly mussel (*Epioblasma obliquata perobliqua*), orangefoot pimpleback (*Plethobasus cooperianus*), speckled pocketbook (*Lampsilis streckeri*), scaleshell (*Leptodea leptodon*) and neosho mucket (*Lampsilis rafinesqueana*) throughout the range of each species. Proposed activities are for the recovery and enhancement of survival of the species in the wild.

Permit Application Number: TE805269

Applicant: Daniel Soluk, University of South Dakota, Vermillion, SD

The applicant requests a permit renewal, with amendments to the existing permit to take (capture and release; collect eggs, larvae, and exuviae) Hine's emerald dragonfly (*Somatochlora hineana*) in the States of Alabama, Illinois, Michigan, Ohio, and Wisconsin. Proposed activities are for the recovery and enhancement of survival of the species in the wild.

Permit Application Number: TE023666

Applicant: Eric Britzke, U.S. Army Corps of Engineers—ERDC, Clinton, MS

The applicant requests a permit renewal, with amendments to the existing permit to take (capture, handle, radio-tag, and release) northern long-eared bat (*Myotis septentrionalis*) and add the District of Columbia and the States of Connecticut, Delaware, Louisiana, Maine, Minnesota, Montana, Nebraska, North Dakota, South Dakota, and Wyoming. Proposed activities are for the recovery and enhancement of survival of the species in the wild.

Permit Application Number: TE38860A

Applicant: Jason Garvon, Lake Superior State University, Sault Sainte Marie, MI

The applicant requests a permit renewal to take (harass) piping plover (*Charadrius melodus*) in the Upper Peninsula of Michigan. Activities are proposed for the conservation and recovery of the species in the wild.

Permit Application Number: TE66634A

Applicant: U.S. Army Corps of Engineers—Memphis District, Memphis, TN

The applicant requests a permit renewal to take (capture and release) spectaclecase (*Cumberlandia monodonta*), snuffbox (*Epioblasma triquetra*), Higgins eye (*Lampsilis higginsii*), pink mucket pearly mussel (*Lampsilis abrupta*), sheepnose (*Plethobasus cyphyus*), fat pocketbook (*Potamilus capax*), rayed bean (*Villosa fabalis*), rabbitsfoot (*Quadrula cylindrica cylindrica*), orangefoot pimpleback (*Plethobasus cooperianus*), scaleshell (*Leptodea leptodon*), Curtis pearlymussel (*Epioblasma florentina curtisii*), and winged mapleaf (*Quadrula fragosa*) in the States of Iowa, Wisconsin, Illinois, and Missouri. Proposed activities are for the recovery and enhancement of survival of the species in the wild.

Permit Application Number: TE70868B

Applicant: Brian Ortman, South Solon, OH

The applicant requests a permit to take (capture and release, conduct nonlethal sampling, radio-tag, and band) Indiana bat (*Myotis sodalis*) and northern long-eared bat (*Myotis septentrionalis*) in the States of Indiana, Kentucky, Michigan, Missouri, Ohio, Pennsylvania, and West Virginia. Proposed activities are for the recovery and enhancement of survival of the species in the wild.

Permit Application Number: TE89559A

Applicant: AECOM, Cleveland, OH

The applicant requests a permit renewal, with amendments to the existing permit to take (capture and release, conduct nonlethal sampling, and radio-tag) northern long-eared bat (*Myotis septentrionalis*), and add the District of Columbia and the States of Connecticut, Delaware, Louisiana, Maine, Minnesota, Montana, Nebraska, North Dakota, South Dakota, and Wyoming. Proposed activities are for the recovery and enhancement of survival of the species in the wild.

Permit Application Number: TE71524B

Applicant: Theresa Morgan, Charleston, WV

The applicant requests a permit renewal with amendments to the existing permit, to take (capture and release) northern long-eared bat in the States of Alabama, Arkansas, Connecticut, Delaware, Georgia, Illinois, Indiana, Kentucky, Maryland, Massachusetts, Michigan, Mississippi, Missouri, New Hampshire, New Jersey, New York, North Dakota, Ohio, Oklahoma, Pennsylvania, Rhode Island, South Carolina, Tennessee, Texas, Vermont, Virginia, West Virginia, and Wisconsin. Proposed activities are for the recovery and enhancement of survival of the species in the wild.

Permit Application Number: TE74488B

Applicant: Missouri Cooperative Research Unit, Columbia, MO

The applicant requests a permit to conduct behavioral research for Topeka shiner (*Notropis topeka*) in Missouri to determine water quality preferences and tolerances for the purpose of enhancing the species' survival.

Request for Public Comments

We seek public review and comments on these permit applications. Please refer to the permit number when you submit comments. Comments and materials we receive are available for public inspection, by appointment, during normal business hours at the address shown in the **ADDRESSES** section. Before including your address, phone number, email address, or other

personal identifying information in your comment, you should be aware that your entire comment—including your personal identifying information—may be made publicly available at any time. While you can ask us in your comment to withhold your personal identifying information from public review, we cannot guarantee that we will be able to do so.

Dated: August 25, 2015.

Lynn M. Lewis,

Assistant Regional Director, Ecological Services, Midwest Region.

[FR Doc. 2015–21724 Filed 9–1–15; 8:45 am]

BILLING CODE 4310–55–P

DEPARTMENT OF THE INTERIOR

Bureau of Land Management

[LLES935000.L54100000.FR0000]

Notice of Realty Action: Application for Segregation and Conveyance of Federally Owned Mineral Interests in Mathews County, VA

AGENCY: Bureau of Land Management, Interior.

ACTION: Notice.

SUMMARY: The Bureau of Land Management (BLM) is processing an application under the Federal Land Policy Management Act of October 21, 1976 (FLPMA), to convey the undivided mineral interest owned by the United States in 96.75 acres located in Mathews County, Virginia, to the surface owner, Joseph M. Perdue. Upon publication of this notice, the BLM is temporarily segregating the federally owned mineral interests in the land covered by the application from all forms of appropriation under the public land laws, including the mining laws, for up to 2 years while the BLM processes the application. If the application meets the requirements in the statute and the regulation, the BLM may convey the United States' entire interest in the minerals within the tract.

DATES: Interested persons may submit written comments to the BLM at the address listed below. Comments must be received no later than October 19, 2015.

ADDRESSES: Bureau of Land Management, Eastern States State Office, 20 M Street SE., Suite 950, Washington, DC 20003. Detailed information concerning this action is available for review at this address.

FOR FURTHER INFORMATION CONTACT: Charles Johnson, Land Law Examiner, by telephone at 202–912–7737, or by email at *c35johns@blm.gov.* Persons who use a telecommunications device for the deaf (TDD) may call the Federal Information Relay Service (FIRS) at 1–800–877–8339 to contact the above individuals during normal business hours. The FIRS is available 24 hours a day, 7 days a week, to leave a message or question for the above individuals. You will receive a reply during normal business hours.

SUPPLEMENTARY INFORMATION: The federally owned mineral interest segregated by this Notice is located in Mathews County, Virginia, in a parcel described in a deed recorded on May 6, 1990, in Deed Book 154 Page 731 in the Matthews County Circuit Court as follows:

All that certain piece, parcel or tract of land, together with the improvements thereon and the appurtenances thereunto belonging, situate, lying, and being in the Westville Magisterial District of Mathews County Virginia, containing 96.7457 acres according to the plat of survey hereinafter mentioned, be the same more or less, and bounded as follows: On the North by the land of the Commonwealth of Virginia and by Virginia State Highway Route 14; on the East by the land of the Chesapeake Corporation of Virginia; on the South by the land of Ishmael Bates Sadler, the land of Robert Dewey Sadler, the land of Alvin H. and David H. Ingram, the lands of James M. Wilson and Ellen W. Wilson and the land of James J. Walsh, Jr. and Patricia A. Walsh; and on the West by the land of Marion Cook and the land of the Commonwealth of Virginia, and being more fully and accurately described on the plat of survey made by Wayne E. Lewis (of Keller, Lewis and Assoc., P.C.), Land Surveyor, dated December 13, 1989 . . . The area described contains 96.7457 acres.

Under certain conditions, Section 209(b) of FLPMA authorizes the sale and conveyance of the federally owned mineral interests in land to the current surface owner. The applicant has deposited, as required under Section 209(b)(3)(i) of FLPMA, a sum of money determined sufficient to cover administrative costs, including but not limited to, the cost for the Mineral Potential Report. The objective is to allow consolidation of the surface and mineral interests when either one of the following conditions exist: (1) There are no known mineral values in the land; or (2) Where continued Federal ownership of the mineral interests interferes with or precludes appropriate non-mineral development and such development is a more beneficial use of the land than mineral development.

James M. Perdue, the surface owner, filed an application for the conveyance of federally owned mineral interests in the above-described tract of land. Subject to valid existing rights, on September 2, 2015 the federally owned mineral interests in the land described above are hereby segregated from all forms of appropriation under the public land laws, including the mining laws, while the application is being processed to determine if either one of the two specified conditions exists and, if so, to otherwise comply with the procedural requirements of 43 CFR part 2720. The segregation shall terminate upon: (1) Issuance of a patent or other document of conveyance as to such mineral interests; (2) Final rejection of the application; or (3) On September 5, 2017, whichever occurs first. Please submit all comments in writing to the individuals at the address listed above.

Before including your address, phone number, email address, or other personal identifying information in your comment, you should be aware that your entire comment, including your personal identifying information, may be made available to the public at any time. While you can ask in your comment to withhold your personal identifying information from public review, we cannot guarantee that we will be able to do so.

Authority: 43 CFR 2720.1–1(b)

Marci L. Todd,

Acting State Director.

[FR Doc. 2015–21788 Filed 9–1–15; 8:45 am]

BILLING CODE 4310–GJ–P

DEPARTMENT OF THE INTERIOR

Bureau of Land Management

[IDI–32319]

Notice of Application for Withdrawal Extension and Opportunity for Public Meeting, Idaho

AGENCY: Bureau of Land Management, Interior.

ACTION: Notice.

SUMMARY: The United States Forest Service (USFS) has filed an application with the Bureau of Land Management (BLM) requesting that the Assistant Secretary of the Interior for Land and Minerals Management extend the duration of Public Land Order (PLO) No. 7306 for an additional 20-year term. PLO No. 7306 withdrew 3,805.87 acres of National Forest System land from mining to protect the Howell Canyon Recreation Complex. The withdrawal created by PLO No. 7306 will expire on

January 1, 2018, unless it is extended. The land will remain open to all allowable uses other than the mining laws. This notice also gives an opportunity for the public to comment and to request a public meeting on the withdrawal extension application.

DATES: Comments and public meeting requests must be received by December 1, 2015.

ADDRESSES: Comments and meeting requests should be sent to the Idaho State Director, BLM, 1387 S. Vinnell Way, Boise, Idaho 83709.

FOR FURTHER INFORMATION CONTACT: Jeff Cartwright, BLM Idaho State Office 208–373–3885 or Sherry Stokes-Wood, Lands, USFS Intermountain Regional Office 801–625–5800. Persons who use a telecommunications device for the deaf (TDD) may call the Federal Information Relay Service (FIRS) at 1–800–877–8339 to contact either of the above individuals. The FIRS is available 24 hours a day, 7 days a week. You will receive a reply during normal business hours.

SUPPLEMENTARY INFORMATION: The USFS has filed an application requesting that the Secretary of the Interior extend the withdrawal created by PLO No. 7306 for an additional 20-year term, subject to valid existing rights. PLO No. 7306 (63 FR 109 (1998)) withdrew 3,805.87 acres of National Forest System Land in the Sawtooth National Forest, Cassia County, Idaho from location and entry under the United States mining laws, but not from the general land laws or leasing under the mineral leasing laws. The purpose of the requested withdrawal extension is to continue to protect the Howell Canyon Recreation Complex investments made by the USFS and its permittees, and to preserve a Research Natural Area.

The use of a right-of-way, interagency agreement, or cooperative agreement would not adequately protect the land from nondiscretionary uses, which could result in a permanent loss of significant values and capital investments.

There are no suitable alternative sites with equal or greater benefit to the government.

The USFS would not need to acquire water rights to fulfill the purpose of the requested withdrawal extension.

Records related to the application may be examined by contacting Jeff Cartwright at the above address or by phone number.

For a period until December 1, 2015, all persons who wish to submit comments, suggestions, or objections in connection with the withdrawal extension application may present their views in writing to the BLM State Director at the **ADDRESS** indicated above.

Comments, including names and street addresses of respondents, will be available for public review during regular business hours. Before including your address, phone number, email address, or other personal identifying information in your comment, you should be aware that your entire comment—including your personal identifying information—may be made publicly available at any time. While you may ask us in your comment to withhold your personal identifying information from public review, we cannot guarantee that we will be able to do so.

Notice is hereby given that an opportunity for a public meeting is afforded in connection with the withdrawal extension application. All interested persons who desire a public meeting for the purpose of being heard on the withdrawal extension application must submit a written request to the BLM State Director at the **ADDRESS** indicated above by December 1, 2015. Upon determination by the authorized officer that a public meeting will be held, a notice of the time and place will be published in the **Federal Register** and a newspaper having a general circulation in the vicinity of the land at least 30 days before the scheduled date of the meeting.

The application will be processed in accordance with the regulations set forth in 43 CFR 2310.4.

James M. Fincher,

Chief, Branch of Lands, Minerals and Water Rights, Resource Services.

[FR Doc. 2015–21803 Filed 9–1–15; 8:45 am]

BILLING CODE 3411–15–P

DEPARTMENT OF THE INTERIOR

Bureau of Safety and Environmental Enforcement

[Docket ID BSEE–2015–0005; OMB Control Number 1014–0024; 15XE1700DX EEEE500000 EX1SF0000.DAQ000]

Information Collection Activities: Plans and Information; Submitted for Office of Management and Budget (OMB) Review; Comment Request

ACTION: 30-Day Notice.

SUMMARY: To comply with the Paperwork Reduction Act of 1995 (PRA), the Bureau of Safety and Environmental Enforcement (BSEE) is notifying the public that we have submitted to OMB an information collection request (ICR) to renew approval of the paperwork requirements in the regulations under subpart B, *Plans and Information.* This notice also provides the public a second opportunity to comment on the revised paperwork burden of these regulatory requirements.

DATES: You must submit comments by October 2, 2015.

ADDRESSES: Submit comments by either fax (202) 395–5806 or email (*OIRA_Submission@omb.eop.gov*) directly to the Office of Information and Regulatory Affairs, OMB, Attention: Desk Officer for the Department of the Interior (1014–0024). Please provide a copy of your comments to BSEE by any of the means below.

- Electronically go to *http://www.regulations.gov.* In the Search box, enter BSEE–2015–0005 then click search. Follow the instructions to submit public comments and view all related materials. We will post all comments.
- Email *cheryl.blundon@bsee.gov,* fax (703) 787–1546, or mail or hand-carry comments to the Department of the Interior; Bureau of Safety and Environmental Enforcement; Regulations and Standards Branch; ATTN: Cheryl Blundon; 45600 Woodland Road, Sterling, VA 20166. Please reference ICR 1014–0024 in your comment and include your name and return address.

FOR FURTHER INFORMATION CONTACT: Cheryl Blundon, Regulations and Standards Branch, (703) 787–1607, to request additional information about this ICR. To see a copy of the entire ICR submitted to OMB, go to *http://www.reginfo.gov* (select Information Collection Review, Currently Under Review).

SUPPLEMENTARY INFORMATION:

Title: 30 CFR 250, Subpart B, *Plans and Information.*

OMB Control Number: 1014–0024.

Abstract: The Outer Continental Shelf (OCS) Lands Act, as amended (43 U.S.C. 1334), authorizes the Secretary of the Interior to prescribe rules and regulations necessary for the administration of the leasing provisions of that act related to mineral resources on the OCS. Such rules and regulations will apply to all operations conducted under a lease, right-of-use and easement, or unit. Operations on the OCS must preserve, protect, and develop oil and natural gas resources in a manner that is consistent with the need to make such resources available to meet the Nation's energy needs as rapidly as possible; to balance orderly energy resource development with protection of human, marine, and

coastal environments; to ensure the public a fair and equitable return on the resources of the OCS; and to preserve and maintain free enterprise competition.

In addition to the general rulemaking authority of the OCSLA at 43 U.S.C. 1334, section 301(a) of the Federal Oil and Gas Royalty Management Act (FOGRMA), 30 U.S.C. 1751(a), grants authority to the Secretary to prescribe such rules and regulations as are reasonably necessary to carry out FOGRMA's provisions. While the majority of FOGRMA is directed to royalty collection and enforcement, some provisions apply to offshore operations. For example, section 108 of FOGRMA, 30 U.S.C. 1718, grants the Secretary broad authority to inspect lease sites for the purpose of determining whether there is compliance with the mineral leasing laws. Section 109(c)(2) and (d)(1), 30 U.S.C. 1719(c)(2) and (d)(1), impose substantial civil penalties for failure to permit lawful inspections and for knowing or willful preparation or submission of false, inaccurate, or misleading reports, records, or other information. Because the Secretary has delegated some of the authority under FOGRMA to BSEE, 30 U.S.C. 1751 is included as additional authority for these requirements.

The Independent Offices Appropriations Act (31 U.S.C. 9701), the Omnibus Appropriations Bill (Pub. L. 104–133, 110 Stat. 1321, April 26, 1996), and OMB Circular A–25, authorize Federal agencies to recover the full cost of services that confer special benefits. Under the Department of the Interior's implementing policy, the Bureau of Safety and Environmental Enforcement (BSEE) is required to charge fees for services that provide special benefits or privileges to an identifiable non-Federal recipient above and beyond those which accrue to the public at large. Deepwater Operations Plans are subject to cost recovery, and BSEE regulations specify a service fee for this request.

Regulations implementing these responsibilities are under 30 CFR part 250, subpart B, and are among those delegated to BSEE. This request also covers any related Notices to Lessees and Operators (NTLs) that BSEE issues to clarify, supplement, or provide additional guidance on some aspects of our regulations.

Responses are mandatory or are required to obtain or retain a benefit. No questions of a sensitive nature are asked. BSEE protects information considered proprietary under the Freedom of Information Act (5 U.S.C. 552) and DOI's implementing regulations (43 CFR part 2), and under regulations at 30 CFR 250.197, *Data and information to be made available to the public or for limited inspection,* 30 CFR part 252, *OCS Oil and Gas Information Program.*

We collect the information required under this Subpart for:

§ 250.282—Post-Approval Requirements for the EP, DPP, and DOCD: While the information is submitted to BOEM, BSEE analyzes and evaluates the information and data collected under this section of subpart B to verify that an ongoing/completed OCS operation is/was conducted in compliance with established environmental standards placed on the activity.

§§ 250.286–295—Deepwater Operations Plan (DWOP): BSEE analyzes and evaluates the information and data collected under this section of subpart B to ensure that planned operations are safe; will not adversely affect the marine, coastal, or human environment; and will conserve the resources of the OCS. We use the information to make an informed decision on whether to approve the proposed deepwater operations plans (DWOPs), or whether modifications are necessary without the analysis and evaluation of the required information.

Frequency: On occasion and as required by regulation.

Description of Respondents: Potential respondents comprise OCS Federal oil, gas, or sulphur lessees and/or operators.

Estimated Reporting and Recordkeeping Hour Burden: The estimated annual hour burden for this information collection is a total of 37,084 hours. The following chart details the individual components and estimated hour burdens. In calculating the burdens, we assumed that respondents perform certain requirements in the normal course of their activities. We consider these to be usual and customary and took that into account in estimating the burden.

BURDEN TABLE

Citation 30 CFR 250 Subpart B and NTLs	Reporting and recordkeeping requirement *	Non-hour cost burdens *		
		Hour burden	Average number of annual responses annual	Burden hours
201; 204; 205	General requirements for plans and information; service fees; confirmations; etc.	Burden included with specific requirements below.		0
Post-Approval Requirements for the EP, DPP, and DOCD [for BSEE applications/permits that include drilling, workovers, production, pipelay, facility installation, and decommissioning, etc.]				
282 282(b)	Retain monitoring data/information; upon request, make available to BSEE. Submit monitoring plan for approval. Submit monitoring reports and data.	All information that is submitted from industry is received by BOEM. Industry's hour burdens for these regulatory requirements are covered under 30 CFR part 550, subpart B, 1010–0151. BSEE's Environmental Compliance Program reviews all monitoring plans and reports to verify industry's compliance.		
Submit DWOPs and Conceptual Plans				
287; 291; 292	Submit DWOP and accompanying/supporting information	1,140	11 plans	12,540
		$3,599 × 11 = $39,589		

BURDEN TABLE—Continued

Citation 30 CFR 250 Subpart B and NTLs	Reporting and recordkeeping requirement *	Non-hour cost burdens *		
		Hour burden	Average number of annual responses annual	Burden hours
288; 289	Submit a Conceptual Plan for approval	375	8 plans	3,000
294	Submit a combined Conceptual Plan/DWOP for approval before deadline for submitting Conceptual Plan.	748	27 plans	20,196
295	Submit a revised Conceptual Plan or DWOP for approval within 60-day of material change.	180	7 plan revisions	1,260
Subtotal			53 responses	36,996
			$39,589 non-hour costs	
200 thru 295	General departure and alternative compliance requests not specifically covered elsewhere in subpart B regulations.	8	11 requests	88
Subtotal			11 responses	88
Total Burden			399 responses	37,084
			$39,589 Non-Hour Cost Burdens	

Estimated Reporting and Recordkeeping Non-Hour Cost Burden: We have identified one non-hour cost associated with this IC; DWOP's ($3,599) under § 250.292, and estimate that the annual total non-hour cost burden is $39,589. We have not identified any other non-hour cost burdens associated with this collection of information.

Public Disclosure Statement: The PRA (44 U.S.C. 3501, *et seq.,)* provides that an agency may not conduct or sponsor a collection of information unless it displays a currently valid OMB control number. Until OMB approves a collection of information, you are not obligated to respond.

Comments: Section 3506(c)(2)(A) of the PRA (44 U.S.C. 3501, *et seq.,*) requires each agency ''. . . to provide notice . . . and otherwise consult with members of the public and affected agencies concerning each proposed collection of information . . .'' Agencies must specifically solicit comments to: (a) Evaluate whether the collection is necessary or useful; (b) evaluate the accuracy of the burden of the proposed collection of information; (c) enhance the quality, usefulness, and clarity of the information to be collected; and (d) minimize the burden on the respondents, including the use of technology.

To comply with the public consultation process, on May 22, 2015, we published a **Federal Register** notice (80 FR 29736) announcing that we would submit this ICR to OMB for approval. The notice provided the required 60-day comment period. In addition, § 250.199 provides the OMB Control Number for the information collection requirements imposed by the 30 CFR part 250, subpart B regulations. The regulation also informs the public that they may comment at any time on the collections of information and provides the address to which they should send comments. We received one comment in response to the **Federal Register** notice. The comment from a private citizen pertained to why weren't plans submitted electronically thereby reducing the paperwork burden and would also assist in retention of such plans. BSEE's response: Since the split, some plans have been transferred to BOEM under 30 CFR part 550 and some to BSEE. As to the plans that are submitted to BSEE, we are developing requirements for a new ePlans and ePermits (electronic submittal) project that does include Deepwater Operations Plans (DWOPs) that should start in development by FY 2016.

Public Availability of Comments: Before including your address, phone number, email address, or other personal identifying information in your comment, you should be aware that your entire comment—including your personal identifying information—may be made publicly available at any time. While you can ask us in your comment to withhold your personal identifying information from public review, we cannot guarantee that we will be able to do so.

Dated: August 5, 2015.

Robert W. Middleton,

Deputy Chief, Office of Offshore Regulatory Programs.

[FR Doc. 2015–21725 Filed 9–1–15; 8:45 am]

BILLING CODE 4310–VH–P

DEPARTMENT OF JUSTICE

Drug Enforcement Administration

[Docket No. 14–6]

Abbas E. Sina, M.D.; Decision and Order

On May 15, 2015, the then-Administrator of the Drug Enforcement Administration issued the attached order. Therein, based on her review of the record, the then-Administrator concluded that, in the event Respondent presented evidence that he has continued to comply with his Professionals Resource Network (PRN) contract and has passed all drug tests since the closing of the record, he is entitled to be registered subject to the extensive conditions set forth in her order. The then-Administrator thus ordered Respondent to provide such evidence.

In response to the order, Respondent provided his drug test results, all of which have been negative. Respondent did not, however, provide evidence of his compliance with the other terms of his PRN contract. Accordingly, on July 27, 2015, I issued an order directing Respondent to ''provide a sworn letter from the PRN attesting to his continued compliance with his PRN contract.'' Order of the Administrator, at 1 (July 27, 2015).

Respondent has now complied and submitted a notarized letter from Penelope P. Ziegler, M.D., the PRN's Medical Director, attesting that he has remained fully compliant with his PRN contract. I therefore conclude that Respondent has met the requirements for obtaining a new registration as set

forth in the May 15, 2015 order (which is attached and incorporated as the Decision in this matter), and that he is entitled to be registered subject to the conditions set forth therein.

Order

Pursuant to the authority vested in me by 21 U.S.C. 823(f) and 28 CFR 0.100(b), I order that the application of Abbas E. Sina, M.D., for a DEA Certificate of Registration as a practitioner be, and it hereby is, granted, subject to the conditions set forth in the then-Administrator's Order of May 15, 2015. This Order is effective immediately.

Dated: August 26, 2015.

Chuck Rosenberg,

Acting Administrator.

Anthony Yim, Esq., for the Government.

William W. Tison, III, Esq., for the Respondent.

ORDER OF THE ADMINISTRATOR May 15, 2015

On November 12, 2013, the Deputy Assistant Administrator, Office of Diversion Control, issued an Order to Show Cause to Abbas E. Sina, M.D. (hereinafter, Respondent), of St. Pete Beach, Florida. ALJ Ex. 1, at 1. The Show Cause Order proposed the denial of Respondent's application for a DEA Certificate of Registration as a practitioner, on the ground that his ''registration would be inconsistent with the public interest, as that term is defined in 21 U.S.C. 823(f).'' *Id.*

As jurisdictional facts, the Show Cause Order alleged that Respondent had previously held a DEA Certificate of Registration which he surrendered ''for cause on July 13, 2011,'' *id.* at 2, and that on July 13, 2012, he had applied for a new practitioner's registration seeking authority to dispense controlled substances in schedules II through V. *Id.* at 1. The Order then alleged that during an interview with a DEA Investigator regarding his application, Respondent admitted to a history of abusing controlled substances including heroin. *Id.*

More specifically, the Show Cause Order alleged that Respondent admitted that ''[o]n or about February 26, 2003,'' he had ''purchased heroin from street dealers'' and ''overdosed,'' after which he was arrested and charged with possessing heroin, possessing drug paraphernalia, and driving under the influence. *Id.* The Order then alleged that Respondent was allowed to resolve the charges by entering a pre-trial diversion program, but that in 2004, he had again begun to abuse controlled substances. *Id.* at 1–2.

Next, the Show Cause Order alleged that between June 19, 2004 and March 23, 2005, Respondent had written eleven prescriptions for OxyContin 80mg, which authorized the dispensing of 720 dosage units, ''without establishing a valid doctor-patient relationship,'' and that ''a medical expert who reviewed [his] actions concluded that [the] prescriptions . . . were for other than a legitimate medical purpose and outside the usual course of professional practice.'' *Id.* at 2 (citing 21 U.S.C. 841(a)(1); 21 CFR 1306.04(a)). The Order further alleged that the Florida Board of Medicine had instituted a proceeding against him based on his misconduct but that he had been ''allowed to settle the case without admitting to the underlying allegations.'' *Id.*

The Show Cause Order further alleged that during his September 2012 interview, Respondent admitted that he had again begun ''abusing heroin in late 2009/early2010,'' and that his use of heroin had tripled over the course of several months. *Id.* The Order then alleged that during the interview, Respondent admitted that ''on or about February 4, 2011,'' he had been arrested at Tampa International Airport and charged with possession of heroin with intent to distribute; possession of methadone, a schedule II drug; possession of Xanax, a schedule IV drug; possession of drug paraphernalia; and trafficking in illegal drugs. *Id.* The Order also alleged that Respondent was allowed to resolve the charges by entering a pre-trial diversion program. *Id.*

Respondent timely requested a hearing on the allegations. ALJ Exs. 2 & 3. The matter was placed on the docket of the Office of Administrative Law Judges, and assigned to Administrative Law Judge (ALJ) McNeil who, following pre-hearing procedures, conducted an evidentiary hearing in Clearwater, Florida on March 4–5, 2014. Following the hearing, both parties filed briefs containing their proposed findings of fact, conclusions of law, and recommended order.

On May 7, 2014, the ALJ issued his Recommended Decision. Therein, the ALJ found that the Government had established a *prima facie* case to deny Respondent's application. With respect to Factor Two—Respondent's experience in dispensing controlled substances—the ALJ noted that Respondent had ''significant positive training and credentials relating to prescribing controlled substances,'' which included his training as a medical resident, his twenty-three years as an emergency room physician, his completion of a course in the proper prescribing of controlled substances, and his studying to become board certified in addiction medicine. R.D. at 36–37.

However, the ALJ further explained that ''while he was buying heroin and other drugs on the street, [Respondent] has become very well acquainted with those in the community who have chosen to traffic in heroin'' and that ''[a] person with that kind of experience, particularly one authorized to write prescriptions for narcotics and other controlled substances, holds a highly valuable key recognized by those in our society who are likely to try to exploit that authority to advance their own illicit goals.'' *Id.* at 37. Continuing, the ALJ reasoned that restoring Respondent's ''ability to prescribe controlled substances carries with it some risk, given the unique skill set [he] developed while seeking heroin and other drugs on the street.'' *Id.* at 38. The ALJ then reasoned that while Respondent ''may well be able to resist efforts from those in the trafficking trade to recruit him during periods of sustained stable recovery, were he to relapse those illicit efforts may well prove successful, creating a significant risk of prescription drug diversion.'' *Id.* The ALJ thus concluded that ''Factor Two neither supports nor contradicts granting [his] application.'' *Id.*

As for Factor Four—compliance with applicable laws related to controlled substances—the ALJ noted that Respondent had conceded that the Government had established a *prima facie* case to deny his application. *Id.* The ALJ then noted that Respondent had unlawfully possessed heroin and drug paraphernalia in 2003; that he had unlawfully prescribed 720 dosage units of OxyContin to his girlfriend, which he then diverted for his own use; that he had misled state authorities ''by withholding from them the fact that he was diverting the [drugs] for his own use''; and that in 2011, he unlawfully possessed heroin, methadone, and Xanax, as well as drug paraphernalia. *Id.* at 39. The ALJ thus concluded that the evidence with respect to Factor Four provided ''a legally sufficient basis'' to deny his application. *Id.*

As for Factor Five—such other conduct which may threaten public health and safety—the ALJ noted that Respondent's self-abuse of controlled substances itself supports denying his application. *Id.* at 40. The ALJ further noted that independent of the evidence of his abuse of controlled substances, the evidence showed that during his periods of abuse, he ''has a demonstrated tendency towards lying in the course of responding to governmental processes.'' *Id.* The ALJ

also suggested that Respondent had given false testimony in this proceeding when he testified that the report of a physician, who had reviewed the investigative file prepared by a Florida DOH investigator for the DOH, was ''100 percent accurate'' because it ''made no mention of the whole truth,'' that being that Respondent was diverting the drugs for his own use. *Id.*

However, the ALJ then noted that Respondent does not currently present[ ] a threat to the public due to a predisposition to prevaricate'' and that he ''can be relied upon to be forthright and candid during his recovery.'' *Id.* at 41. The ALJ further noted that he ''was impressed with [Respondent's] demeanor, his expressions of regret and apology, and with his determination to succeed in his recovery.'' *Id.* The ALJ nonetheless concluded that Respondent's ''chronic history of substance abuse'' and ''pattern of misleading governmental officials'' created ''an unacceptably strong likelihood that [he] would revert to his past behavior and would attempt to either self-medicate or self-destruct'' and thus provided a ''legally sufficient and independent basis'' to deny his application. *Id.*

Addressing the evidence of remediation, the ALJ found that the record as a whole supported the conclusion that Respondent has accepted responsibility for his misconduct. *Id.* at 42. However, based on the testimony of two of Respondent's witnesses, the ALJ concluded that Respondent's ''risk of relapse remains high, and will continue to be high . . . throughout the five years following the commencement of his recovery'' and ''that insufficient time in stable recovery has passed to support a finding that corrective action has been taken.'' *Id.* While acknowledging that ''steps that may lead to effective corrective action have begun, . . . those steps are not complete, and in the absence of complete corrective action the Respondent has not, by a preponderance, presented evidence that would permit the restoration of his'' registration. *Id.* at 42–43. The ALJ thus recommended that Respondent's application be denied.

Thereafter, the parties filed a Joint Statement Regarding the Proposed Stipulations. However, only the Government filed Exceptions to the Recommended Decision.

As for the Joint Statement Regarding the Proposed Stipulations, therein, the parties averred that ''it was their impression and understanding that'' they had agreed only to the Government's Proposed Stipulations numbers one (1) through eight (8) (apparently as set forth in the Supplemental Prehearing Statement) and Respondent's Proposed Stipulations one (1) through four (4). The parties further stated that they did not agree to Respondent's Proposed Stipulations five (5) through twenty-four (24).

Thereafter, the record was forwarded to this Office for final agency action. Having considered the entire record, I agree with the ALJ's conclusion that the Government has satisfied its *prima facie* burden of showing that Respondent's registration would be inconsistent with the public interest. R.D. 49. However, in the event Respondent has continued to remain in compliance with his PRN contract and has passed all of his drug tests since January 28, 2014 and produces such evidence within thirty (30) days of the date of this Order, I conclude that he will have produced sufficient evidence to rebut the Government's *prima facie* case. *Id.* at 50. I make the following findings.[1]

[1] Because the parties jointly agree that the Government never agreed to Respondent's proposed stipulations numbers five (5) through twenty-four (24), I do not consider those stipulations as proving their factual assertions. However, having read the relevant portion of the transcript, I do not find the Government's argument well taken, and but for the fact that Respondent agreed that the Government had not agreed to the stipulations, I would have rejected the Government's contention.

According to the transcript, the following colloquy occurred:

ALJ: Okay. All those stipulations are now considered as facts that I will use in the analysis and recommendations that I prepare in this case.

ALJ: [Government Counsel], the Government was able to stipulate to the four facts shown in my order of January 28, 2014, but it was not able to stipulate to the remainder of those stipulations proposed by the Respondent. Those appear in the Respondent's initial prehearing statement. Do you have that statement?

[Government Counsel]: I do your honor.

ALJ: Are there any proposed stipulations there for which the Government cannot agree?

Government Counsel: No, your honor.

Tr. 45–46. The Government contends that the ALJ ''erred'' in ''interpret[ing] this colloquy as the Government's agreement to stipulate to the nineteen stipulations to which it had previously declined to agree in writing.'' Gov. Exceptions, at 5. This argument, however, begs the question of why the ALJ would ask the Government if it was stipulating to the same four stipulations which it had already agreed to during the conference held by the ALJ on January 28, 2014. *See* Tr. 13. (ALJ: ''Are there any of those that you agree can be considered as fact?'' Government Counsel: ''Stipulations 1 through 4, your honor.'' ALJ: ''1 through 4 are admitted as evidence without further evidence being required to establish those as fact then.'').

I find that the ALJ's question was clear enough to put the Government on notice that he was asking about those stipulations offered by Respondent which the Government had not previously agreed to. To extent the Government was unclear as to which stipulations the ALJ was asking it about, it was incumbent on the Government to clarify which stipulations it had agreed to.

FINDINGS OF FACT

Respondent's Licensure and Registration Status

Respondent is a medical doctor licensed by the Florida Board of Medicine. RX A. Respondent, who has been licensed for nearly thirty years, is board certified in internal medicine. *Id.* Following his residency, Respondent practiced as an emergency room physician for more than twenty years. *Id.*

Respondent previously held a DEA Certificate of Registration, pursuant to which he was authorized to dispense controlled substances in schedules II through V as a practitioner. *See* GX 2, at 3. However, on July 13, 2011, Respondent surrendered this registration for cause. *See* GX 3. On July 12, 2012, Respondent applied for a new practitioner's registration, seeking authority to dispense controlled substances in schedules II through V. *See* GX 1; GX 2, at 1–2. It is this application which is at issue in the proceeding.

Respondent's History of Substance Abuse

While Respondent has practiced medicine for nearly thirty years (including his residency), in his testimony he admitted to a long history of abusing alcohol and controlled substances. Indeed, he admitted to using alcohol; prescription controlled substances without a prescription; as well as street drugs including marijuana, heroin, cocaine, Ecstasy, and LSD. Tr. 194. Indeed, when asked what drugs he had used beside alcohol, prescription drugs, and heroin, he replied that ''[i]t would be easier to say that I think there's three drugs that I haven't used in my lifetime.'' *Id.* at 193.

Respondent admitted to using alcohol and marijuana beginning at the age of fourteen. *Id.* at 194. Moreover, while Respondent testified that he ''stopped after some bad things happen[ed] to friends'' and that he ''lost the desire to do that around college time and medical school,'' he began drinking a ''few years into'' his practice as an emergency room physician. *Id.* at 195.

Moreover, Respondent admitted that beginning in 1998, he began abusing Vicoprofen (a controlled substance which contains hydrocodone) samples that he received. *Id.* at 192. Moreover, Respondent testified that because he had back problems, he had previously obtained some oxycodone ''from a friend who finished his prescription,'' and that on September 11, 2001, he ''woke up and the whole world seemed like it was coming to an end'' so he

injected himself with the oxycodone. *Id.* at 198. According to Respondent, ''it was a very stressful situation that I responded very poorly to by turning to something that I would never have [and had] never done before and didn't see the significance of that action.'' *Id.* However, the oxycodone ''didn't work because I didn't get it in right and I didn't feel anything.'' *Id.*

As for his abuse of heroin, Respondent testified that in 2003, he encountered J.R., his ex-wife's former boyfriend, at a bar. *Id.* at 197. According to Respondent, his ex-wife had previously told him to stay away from J.R. because he did heroin. *Id.* However, because he ''got curious and wanted to try it,'' Respondent apparently approached J.R., who told him that ''he knew where he could get it [heroin] in Tampa, and if I was to buy [J.R.'s], he would . . . make the purchase.'' *Id.*

Respondent drove J.R. to Tampa, and after J.R. procured the heroin, both he and J.R. injected themselves with heroin while in Respondent's car. *Id.* Subsequently, the police were called to a location in Tampa where they found Respondent and J.R. in the former's vehicle, which was parked with three wheels over the curb and one wheel on the road. GX 4, at 7. Respondent was in the driver's seat, with his eyes open, but was unresponsive when a police officer knocked on the window and shined his flashlight onto Respondent's face. *Id.*

Initially, Respondent was motionless, but he then began to shake every ten seconds. *Id.* After a short period, J.R. came to and a police officer removed him from Respondent's car and placed him in his patrol car. *Id.* The officer then returned to Respondent's car and observed a Tampa Fire Department unit giving aid to Respondent (which included the administration of Narcan) and removing him from his car. *Id.* at 7–8. From outside Respondent's car, the officer saw a metal spoon, which contained a brown substance, on the floor behind the driver's seat. *Id.* at 7. The officer seized the spoon and field tested the brown substance, which tested positive for heroin. *Id.* The Office also found an Altoids can on the dashboard in front of the driver's seat; the can held two Q-tip swabs in a small zip-lock bag, a cotton ball, and an alcohol wipe. *Id.*

Another police officer conducted a DUI investigation of Respondent which resulted in his arrest. *Id.* Thereafter, Respondent's vehicle was impounded and an inventory search was conducted; the search found numerous syringes and a vial of sterile water in the vehicle's console. *Id.*

Thereafter, Respondent was criminally charged with possession of heroin. ALJ Ex. 16 (Gov. Stipulation #5). However, Respondent was offered a pretrial drug intervention program, which he successfully completed and the charges were *nolle prossed. Id.;* Tr. 231.

According to Respondent, as part of the program he was required to undergo an evaluation; however, he told the evaluator that the drugs were not his but J.R.'s, and that he had remained in a nightclub while J.R. had gone out to the car and used the drugs. Tr. 200. As part of the program, he also was required to pass drug tests over the course of a six-month period. *Id.; see also id.* at 231. Regarding his false statement to the evaluator, Respondent testified that ''unfortunately—this was an opportunity for me to change . . . to fix the problem, and I don't blame anybody but me because I'm the one who weaseled out of it.'' *Id.; see also id.* at 230 (''Now I look at that as an opportunity to change my life, and I blame no one but myself for not giving the real information to the counselor. . . .'').

Respondent further testified that at the time, he did not think he was an addict, although he ''really was,'' because he had not become physically dependent on heroin and did not go through withdrawal. *Id.* However, he then explained that he was both ''emotionally'' and ''psychologically dependent'' on the drug. *Id.* According to Respondent, while he ''knew there was a problem, [he] thought [he] could handle that problem, and that was the biggest problem of it all.'' *Id.* at 231.

As Respondent further testified, ''that's a big problem among physicians because we're supposed to be the ones that fix people. And so if we can't fix ourselves, we have to admit to ourselves that we are not capable of fixing other people either. And that's a pride issue.'' *Id.*

The evidence further shows that in March 2005, a pharmacist contacted the DOH and reported that over a period of several months, she had received prescriptions written by Respondent to B.B. for steadily increasing dosages of OxyContin 80mg, including a recent prescription for 120 dosage units for which B.B. paid $1,172.99 in cash. GX 11, at 3. The pharmacist also reported that Respondent was an emergency room physician and yet he had been writing the prescriptions on blanks that listed his home address and cell phone number. *Id.* The pharmacist also reported that she had run a physician profile on Respondent and found that all of the other prescriptions that the pharmacy had filled had been written on the prescriptions of the hospital where he worked. *Id.*

After determining that Respondent had not treated B.B. at the hospital where he worked, a DOH Investigator obtained the original prescriptions. The prescriptions showed that between June 19, 2004 and March 23, 2005, Respondent had issued B.B. eleven prescriptions for OxyContin 80mg, which authorized the dispensing of 720 dosage units. GX 11, at 11–19. Consistent with pharmacist's report, the quantity of the dispensings increased from approximately 60 to 120 dosage units per month. *Id.* at 12.

Thereafter, the DOH Investigator, accompanied by a Detective with the Pinellas County Sheriff's Office, went to Respondent's residence where they interviewed both Respondent and B.B. *Id.* at 3. B.B. told the Investigators that she was Respondent's fiancé and lived with him. *Id.* at 4. She also told the Investigators that she had injured her neck in a car accident seven years earlier and had reinjured it during the previous year while on a ski trip. *Id.* She further told the Investigators that she did not seek treatment at the time of the injury because Respondent ''took over her'' treatment, but that he ''did not do any diagnostic studies of her neck'' nor ''refer her to a specialist.'' *Id.* Instead, ''he just prescribed OxyContin for pain.'' *Id.*

During his interview, Respondent stated that he was an ER physician at a local hospital and that he ''did not have an outside practice.'' *Id.* He admitted to writing the prescriptions and corroborated B.B.'s statement that she had reinjured her neck when they were on ski trip. *Id.* Respondent also eventually admitted that he did not have any medical records for his treatment of B.B., that he had not done a diagnostic workup, and that he had not referred her to a specialist. *Id.* He then stated that he intended to refer B.B. to a specialist, but had yet to do so. *Id.*

Subsequently, the DOH retained a medical expert who reviewed its investigative file. GX 8. The expert concluded that Respondent's ''care fell well *below the standard of care* as defined by Floirda[sic] state, local and national norms,'' that OxyContin is ''a strong and highly addictive medication'' which ''requires careful diagnosis and regular reassessment of the patient,'' and that ''[i]t is unacceptable to prescribe the medicine without adequate examination and documentation.'' *Id.* at 2. The expert further noted that Respondent did not maintain any medical records on B.B., that there was ''no evidence that

[Respondent] assessed the patient's medical problems'' and there were ''no known x-rays, lab tests or evaluations.'' *Id.* The expert thus concluded that Respondent's ''diagnosis was therefore inappropriate and inadequate.'' *Id.*

The expert further concluded that while ''[a] specialist's care was not absolutely essential for such a patient'' and that an ''internist could care for such a patient under different circumstances,'' Respondent committed an ''egregious error'' by prescribing OxyContin to ''an intimate partner . . . over a prolonged period.'' *Id.* He also noted that ''[n]o obvious plan for long term treatment was identified.'' *Id.* He thus opined that Respondent's prescribing ''was strikingly inappropriate.'' *Id.*

Thereafter, the DOH issued an administrative complaint to Respondent. The complaint charged Respondent with: 1) failing to practice medicine with that level of care, skill, and treatment of ''a reasonably prudent similar physician . . . under similar conditions and circumstances''; 2) prescribing ''a legend drug, including any controlled substance, other than in the course of the physician's professional practice''; and 3) failing to keep medical records justifying the course of treatment. GX 5, at 15–16, 18.

Respondent was allowed to enter into a settlement agreement with the DOH, pursuant to which he was not required to admit the facts of the Administrative Complaint, but did admit that if those facts were proved, they would establish violations of Florida law as alleged in the Complaint. GX 5, at 4. The DOH then reprimanded Respondent; fined him $15,000; required that he reimburse the DOH's costs in an amount up to $2,000; required that he perform 100 hours of community service; and required that he take a course on ''Prescribing Abusable Drugs.'' *Id.* at 4–7.

Regarding these events, Respondent admitted that the facts alleged in the DOH's complaint ''are the facts,'' that his prescribings to B.B. were outside the usual course of professional practice, and that he ''did not'' have a proper medical justification to prescribe to B.B. Tr. 201–03. He also testified that he ''[a]bsolutely'' agreed with the conclusions contained in the DOH Expert's report. *Id.* at 203. When then asked: ''Is there any part of this report you do not agree with,'' Respondent answered: ''No. It's 100 percent accurate.'' *Id.*

When asked whether the episode had scared him straight or whether he had continued to abuse narcotics, Respondent testified:

> I was scared into stopping the use of any—doing anything wrong for almost a year after that. But unfortunately I never—because I lied—I may as well—I lied about using the medicines that I prescribed to her myself. Well, I didn't lie. I just never said anything. Nobody asked. Nobody from the Department of Health asked, and I didn't volunteer that information. And unfortunately, as far as I'm concerned, it's a lie, and that lie got me no treatment and no help. And to this day—first of all, if I would have said something the first time with the heroin thing to PRN, my whole life would be different.

Id. at 204.

Respondent further explained that he and his girlfriend, who had a ''bad neck to begin with,'' were on a one-week long ski-trip in Colorado, and that on the first day, she had ''wiped out on a snowboard'' and ''couldn't move,'' so he called in a prescription for hydrocodone. *Id.* at 205. Respondent was not sure if he had taken any of the hydrocodone, but believed that he had not because the prescription was for a small quantity which his girlfriend needed to get through the trip. *Id.* at 205–06. However, upon returning to Florida, Respondent began prescribing oxycodone, and Respondent admitted that by the second prescription, he was ''definitely'' using her oxycodone. *Id.* at 205. Respondent further admitted that he had changed her prescription to oxycodone because ''if she had them I might be able to get to them.'' *Id.* at 207.

Respondent maintained that after the visit from the DOH and the Detective, he stopped using the drugs but developed ''physical withdrawal symptoms.'' *Id.* at 208. He then started drinking to deal with the stresses in his life. *Id.* at 209.

Sometime around 2009 or 2010, Respondent was involved in a lawsuit and began injecting heroin again. *Id.* at 210. Because his use of heroin caused withdrawal symptoms, he also used methadone, which he obtained from his heroin supplier, to counteract those symptoms. *Id.* at 211. However, because his use of heroin was intermittent, it disturbed his sleep. *Id.* at 212–13. Respondent testified that he would occasionally use Xanax, which he took from his girlfriend's prescription. *Id.* at 213.

Eventually, Respondent's use of heroin escalated into daily use and the dose needed to avoid becoming sick ''would pretty much double every two or three days.'' *Id.* at 213–14. Respondent tried to stop twice by going ''cold turkey,'' including once prior to a scheduled ski trip, when he had arranged to have two weeks off from work. *Id.* at 214. Respondent testified that he had planned on telling his friends that he couldn't go on the trip. *Id.* at 215. However, after three days of withdrawal his symptoms became unbearable, so he decided to go and ''bought a whole bunch [of] heroin and got as much methadone as [he] could.'' *Id.*

On February 4, 2011, Respondent attempted to leave on the trip. Tr. 84. However, upon going through security at the airport, Respondent was observed ''sweating profusely and shaking'' and was found to be ''in possession of a controlled substance without a prescription.'' *Id.* Respondent was arrested, and during the search of his person, the police found 34 bags of heroin. *Id.* at 85. Respondent admitted to the police that the bags contained heroin; a subsequent analysis by a Florida Department of Law Enforcement lab confirmed this. *Id.* at 85–86. At the time of his arrest, the police also retrieved his checked bags from the airline, and upon searching them, discovered twelve syringes. *Id.* at 85. Respondent stipulated that at the time of his arrest, he ''was also in possession of'' thirty-seven tablets of methadone 10mg and three tablets of Xanax 2mg, and that he did not have a prescription for either drug. ALJ Ex. 16, at 2 (Gov. Stipulations #9); *see also* RX C, at 1.

While Respondent was again criminally charged, the charges were eventually *nolle prossed* as well. Tr. 79. However, in contrast to the two previous episodes, Respondent sought the assistance of the Professional Resource Network (hereinafter, PRN), an entity under contract with the DOH to provide assistance to ''licensed professionals . . . who are experiencing difficulties due to some form of impairing illness.'' *Id.* at 298. Respondent was referred to a treatment program (Health Care Connection) which is run by Dr. David Myers, a Certified Addiction Professional who is both a Diplomate of the America Board of Addiction Medicine and a Fellow of the American Society of Addiction Medicine. *Id.* at 104; RX E. Dr. Myers testified that he has twenty-five years of experience ''working with chemically dependent people,'' and that ''for the last twenty years,'' his focus has been ''on recovering professionals.'' Tr. 97.

Dr. Myers testified that his program has been recognized as a PRN compliant program. *Id.* at 101. His program evaluates new patients, detoxes and stabilizes them, and ''begin[s] to introduce them into recovery techniques and whatever therapy they may need.'' *Id.* at 102. According to Dr. Myers, a new patient receives an extensive interview and is subject to either a drug screen or a hair screen after which a

treatment recommendation is made. *Id.* at 105–06.

On February 12th (eight days after his arrest), Respondent entered Dr. Myers' program and underwent an initial assessment. According to Dr. Myers, Respondent ''was very transparent,'' ''did not make any attempts to muddy the water,'' and told him ''exactly what happened.'' *Id.* at 117. A drug test confirmed Respondent's story regarding the drugs he had been abusing. *Id.* at 110. His treatment included detoxification, followed by 60 days of partial hospitalization which included group therapy, and then entry into a halfway house. *Id.* at 119–21. Respondent passed all of his drug tests, and according to Dr. Myers ''did very well.'' *Id.* at 122–23.

On May 18, 2011, Respondent entered into a contract with the PRN for a period of five years. RX B, at 6. Pursuant to the contract, Respondent agreed, *inter alia,* to participate in random drug testing ''within twelve hours of notification''; to abstain completely from the use of any medications, alcohol or other mood altering substances unless prescribed by his physician and to send copies of all such prescriptions to the PRN; to attend recovery group meetings three times per week; and to agree to attend a weekly PRN monitored professional group with his monitoring professional. *Id.* at 2–3. He also agreed to notify PRN of any changes in his physical or mental health, as well as any change of address or employer; to provide releases for urine screen results, treatment center records and therapist reports; to notify the PRN in the event of his use of ''mood altering substances without a prescription''; to not hold a state dispensing practitioner's license; and to withdraw from practice at PRN's request ''if any problem develops that potentially interferes with [his] professional practice.'' *Id.* at 3–4.

Dr. Myers further testified that Respondent works for him at Health Care Connection and that he performs histories and physicals, ''helps with the detox regimens,'' and helps with sick call. Tr. 124–25. Moreover, Dr. Myers has used Respondent ''to cover the detox unit at'' the Agency for Community Treatment Services, a non-profit, public detoxification unit in Tampa. *Id.* at 125. According to Dr. Myers, Respondent ''does a good job'' and has ''learned how to share his recovery with other people who are struggling in a way that is appropriate and within a set of medical boundaries.'' *Id.* at 128. He further testified that if he had ''any doubt that he was risky, I couldn't use him'' because ''[m]y practice is too high profile in my county.'' *Id.* at 133. Dr. Myers then stated that he ''considers [Respondent] safe or [he] wouldn't have him.'' *Id.*

Dr. Myers also testified that he expects Respondent to continue to do well and that he is fully committed to his recovery. *Id.* at 132. While Dr. Myers acknowledged that Respondent will never be cured, he expressed his belief that Respondent ''is making it'' and will ''continue to make it.'' *Id.* Dr. Myers also testified that Respondent had started a new group for recovering doctors in Pinellas County. *Id.* at 149 & 161.

On cross-examination, Dr. Myers acknowledged that he could not guarantee that Respondent would not relapse. *Id.* at 142. However, when asked if there is a correlation between the length of a person's abuse and the likelihood of relapse, Dr. Myers testified that while ''[t]here are a number of factors which can help predict relapses,'' he did not believe that a correlation has been established between the length of use and the likelihood of relapse. *Id.* Notably, the Government put forward no evidence to refute Dr. Myers's testimony on this point.

For reasons not entirely clear—given that at the time of the hearing, Respondent had been complying with his PRN contract for nearly three years—the Government then asked Dr. Myers:

> Q. So you're telling me that a person has the same amount of percentage of relapsing . . . [who] is drug tested weekly, [goes to] weekly community meetings, you think that that provided the same type relapse percentage as a person who is without any supervision . . . at all?
>
> A. We know that it takes five years to reach maximum benefit in recovery, where the relapse rates then become pretty consistent over time, whether it's five years or 10 years or 15 years.

Id. at 143. Dr. Myers then explained that this was based on ''five years of monitoring.'' *Id.* at 144.[2]

Another physician, who is both a fellow staff member at Health Care Connection and a recovering physician who participated in the same recovery group as Respondent, *id.* at 159–62, testified that Respondent has been ''very open and honest about his addiction as well as his recovery'' and that ''he definitely has an interest in helping others who are afflicted with the same disease.'' *Id.* at 163. Still another physician, who has worked with and supervised Respondent at Health Care Connection testified that he had not observed Respondent engage in any conduct demonstrating that he is not ''a safe and responsible'' physician and that Respondent is ''passionate about'' his recovery. *Id.* at 182–83.

Respondent also called as a witness, Dr. Penelope Ziegler, the Medical Director and CEO of PRN, Inc. *Id.* at 298. Dr. Ziegler is board certified in Psychiatry and Addiction Psychiatry, as well as certified in Addiction Medicine by the American Board of Addiction Medicine. *Id.* at 299. Since the completion of her residency in 1982, Dr. Ziegler has ''focused [her] professional activities on the treatment of addiction'' as well as ''other psychiatric disorders.'' *Id.* Prior to her present positions, she was the medical director of similar programs in Pennsylvania and Virginia. *Id.*

After explaining the PRN's program, Dr. Ziegler testified that Respondent ''has been entirely compliant with his contract and [that] we have received all of his reports as scheduled . . . indicating continued progress.'' *Id.* at 306. She further testified that ''all of [Respondent's] urine screens have been negative,'' and thus she believes that he has not been using controlled substances illegally. *Id.* Corroborating Dr. Ziegler's testimony, Respondent submitted a Test History Report listing each drug test he had undergone between June 6, 2011 and January 28, 2014; the report indicates that each test was negative. RX D.

Dr. Ziegler further testified that Respondent's contract is scheduled to end on May 18, 2016. Tr. 307. She then explained that PRN offers most doctors the ''opportunity to extend their monitoring beyond the five years if they choose,'' and that if a doctor agrees to do so, they are given a contract for ''extended monitoring.'' *Id.* While this contract does not require continued attendance at group meetings, it still requires urine screening. *Id.* Dr. Ziegler also noted that in some cases, PRN offers a physician a ''licensure long contract.'' *Id.* at 308. Dr. Ziegler explained that a ''licensure long contract . . . is sometimes required by the Board of Medicine'' where the Board believes that a physician is an ''ongoing risk of relapse without monitoring.'' *Id.*

[2] The Government then asked Dr. Myers if he had ''compared data for treated monitoring versus untreated monitoring?'' Tr. 144. While Dr. Myer replied that ''[t]hat has been done, but only in the first two to three years of the recovery process,'' *id.,* the record does not establish what ''untreated monitoring'' involves.

Subsequently, Dr. Myers testified that the PRN had initially used ''a two-year contract'' but found that ''too many docs and . . . healthcare professionals [were] relapsing following the two years.'' *Id.* at 147. Dr. Myers then explained that the PRN contract was lengthened ''to five years, which is what studies suggest . . . is a solid recovery time'' and that ''the percentage of relapse is very low'' for those persons who complete five years. *Id.*

However, a physician can voluntarily request a licensure-long contract, which remains in effect until the physician retires, voluntarily relinquishes his license, or some ''untoward circumstances'' arise. *Id.* at 309.

Dr. Ziegler testified that one of the terms of Respondent's PRN contract is that he is required to obtain ''permission from PRN to return to practice.'' *Id.* at 310. She further testified that Respondent has complied with each of the conditions of the contract, as well as all federal and state laws related to controlled substances while he has been in the PRN's program. *Id.* at 311–12.

On cross-examination, Dr. Ziegler acknowledged that Respondent could ''walk away from'' his PRN contract at any time if he chose to do so. *Id.* at 312. However, she also explained that if he did so, he would be ''immediately reported'' to the DOH. *Id.* at 313. She also maintained that if she had reason to believe that he poses ''an immediate danger to the public health,'' she would also contact the Chief of the DOH's Prosecutorial Services Unit. *Id.* at 314. However, Dr. Ziegler acknowledged that in such a scenario, only the DOH has authority to issue an emergency suspension of Respondent's medical license. *Id.* at 321; 323.

When asked (on re-direct examination) if granting prescribing authority to Respondent would pose ''any safety issue,'' Dr. Ziegler testified:

> No. And people at his stage of recovery and at his point in monitoring with us, lots of those practitioners hold DEA certificates and use them in the course of their practice of medicine. You know, having prescribing privileges, there's a certain amount of risk associated with it. But at his stage of the game it certainly is not something we would be concerned about because he is doing very well.

Id. at 317–18.

Dr. Ziegler then explained that if Respondent was to obtain employment in an emergency room, the PRN would ''want to have some kind of an understanding with his employer . . . so that we had permission to talk to them if we were concerned or they had permission to talk to us if they were concerned,'' and that Respondent would have to agree to this before the PRN would allow him to accept the position. *Id.* at 318. And she further testified that were Respondent to accept a position in an emergency room without notifying the PRN, this would constitute a material breach of the PRN contract and he would be immediately pulled from practice and required to undergo a new evaluation. *Id.*

Following questioning by the parties, the ALJ asked Dr. Ziegler ''what significance [she] attach[ed] to the premise of a stable recovery [being] measured in terms of five years?'' *Id.* at 325. Dr. Ziegler answered:

> Right now that is sort of a standard accepted practice in all of the professional monitoring programs that are members of a group called the Federation of State Physician Health Programs.
>
> It used to be three years and it was extended to five years because there was [sic] some research studies that showed that three years may not be long enough and that relapses did frequently occur at the three-year point, although we don't really fully understand why because the research isn't there to demonstrate it. But that's pretty much a standard operating procedure for most of these monitoring programs around the country.
>
> It definitely seems to correlate with outcome data that says the chances of relapse after five years of stable monitored recovery is greatly lessened compared to people who are not monitored. And that's kind of the best answer I can give you. There's nothing really all that magic [sic] about five years. It's just that that's kind of a standard these days.

Id. at 325–26.

The ALJ then asked Dr. Ziegler what ''it means to represent that someone is safe to practice?'' *Id.* at 326. Dr. Ziegler answered:

> Well, when we make that kind of representation, we're basing that on reports that we receive from the treating professional involved with this person's individual situation at the outset and then as we go along, also with the results of our frequent random drug testing and our contact with the person, mostly over the phone, as they go through our program.
>
> . . . what I usually say if I'm writing a letter to the Board of Medicine or to a potential employer or to an insurance company or to the DEA is in my professional opinion[,] this person is safe to practice with reasonable skill and safety.
>
> I believe that when somebody is in our monitoring program and has done well for a period of time that they are as safe to practice with reasonable skill and safety as someone who has never been identified as having a problem.

Id. at 326–27.

Finally, the ALJ noted that Respondent's PRN contract includes a provision which states that PRN ''agrees to assume an advocacy role with [the] Professional Licensing Board, hospital board, and *other appropriate agencies,* provided the above listed terms are agreed to and met.'' RX B, at 6 (emphasis added). The ALJ then asked Dr. Ziegler whether DEA was considered to be ''such an agency.'' Tr. 329. Dr. Ziegler answered:

> Well, I'm not wild about that term ''advocacy,'' but I'll buy it temporarily and say yes. I mean, advocacy means that we are willing to do something like today . . . . You're having a hearing and I'm willing to come and testify that this person has done the right thing and is safe to practice and whatever. If that's what you mean by advocacy, yeah, that's what we do, part of what we do.
>
> And the other part of what we do is we withdraw advocacy if it's no longer wanted or warranted . . . because otherwise our credibility is no good. . . . Our credibility depends upon our willingness to withdraw our advocacy if the person no longer warrants that advocacy.

Id. at 329–30.

On further questioning by Respondent's counsel, Dr. Ziegler testified that it was ''correct'' that 85 to 90 percent of PRN's patients ''comply with their contract[s] and ''make it.'' *Id.* at 331. However, on re-cross examination, Dr. Ziegler acknowledged that she could not guarantee that Respondent would never relapse. *Id.* at 331–32.

In addition to his previous testimony regarding the various incidents, Respondent admitted that he had probably used drugs when he was working. *Id.* at 216. When asked how long he would continue to be actively monitored, Respondent answered: ''the rest of my life, if it can happen.'' *Id.* at 219; *see also id.* at 256 (expressing willingness to sign lifelong PRN contract). He further testified that during the fourth year of monitoring, he would be subject to eighteen urine tests as well as a hair test every three months, and that in the fifth year of his PRN contract, he would be subject to twenty-four urine tests. *Id.* at 220. However, Respondent did not know how many urine tests would be conducted each year if he contracted for additional monitoring. *Id.* Respondent then acknowledged that both the DOH and this Agency could require that he stay in the PRN program. *Id.* at 221.

Respondent also acknowledged that as an emergency room physician, at times he did experience ''great stress.'' *Id.* at 224. Respondent explained, however, that ''most of the time, I was able to handle that, and that's without having any knowledge [of] how to do it.'' *Id.* Respondent further agreed that his recovery will be ''a lifelong struggle'' and that he could not guarantee that he will never relapse. *Id.* at 225–26. He further testified that he accepted all responsibility for ''all of these violations that [he] had both as related to controlled substances and the way that [he] practice[d] medicine outside . . . of [the] standards of care.'' *Id.* at 249.

DISCUSSION

Section 303(f) of the Controlled Substances Act (CSA) provides that ''[t]he Attorney General may deny an application for [a practitioner's]

registration . . . if [he] determines that the issuance of such registration . . . would be inconsistent with the public interest.'' 21 U.S.C. § 823(f). In making the public interest determination, the CSA directs that the following factors be considered:

(1) The recommendation of the appropriate State licensing board or professional disciplinary authority.
(2) The applicant's experience in dispensing . . . controlled substances.
(3) The applicant's conviction record under Federal or State laws relating to the manufacture, distribution, or dispensing of controlled substances.
(4) Compliance with applicable State, Federal, or local laws relating to controlled substances.
(5) Such other conduct which may threaten the public health and safety.

Id.

''[T]hese factors are . . . considered in the disjunctive.'' *Robert A. Leslie,* 68 FR 15227, 15230 (2003). I may rely on any one or a combination of factors and may give each factor the weight I deem appropriate in determining whether to deny an application for a registration. *Id.* Moreover, I am ''not required to make findings as to all of the factors.'' *Hoxie* v. *DEA,* 419 F.3d 477, 482 (6th Cir. 2005); *see also Morall* v. *DEA,* 412 F.3d 165, 173–74 (D.C. Cir. 2005).

The Government has ''the burden of proving [by substantial evidence] that the requirements for . . . registration . . . are not satisfied.'' 21 CFR 1301.44(d); *see also* 5 U.S.C. § 556(d). However, where the Government has met its *prima facie* burden of showing that issuing a new registration to the applicant would be inconsistent with the public interest, a respondent must come forward with ''sufficient mitigating evidence'' to show why he can be entrusted with a new registration. *Medicine Shoppe-Jonesborough,* 73 FR 364, 387 (2008) (quoting *Samuel S. Jackson,* 72 FR 23848, 23853 (2007) (quoting *Leo R. Miller,* 53 FR 21931, 21932 (1988))). Moreover, because '' 'past performance is the best predictor of future performance,' *ALRA Labs, Inc.* v. *DEA,* 54 F.3d 450, 452 (7th Cir.1995), [DEA] has repeatedly held that where a registrant has committed acts inconsistent with the public interest, the registrant must accept responsibility for [his] actions and demonstrate that [he] will not engage in future misconduct.'' *Medicine Shoppe,* 73 FR at 387; *see also Jackson,* 72 FR at 23853; *John H. Kennedy,* 71 FR 35705, 35709 (2006); *Cuong Tron Tran,* 63 FR 64280, 64283 (1998); *Prince George Daniels,* 60 FR 62884, 62887 (1995). *See also Hoxie* v. *DEA,* 419 F.3d at 483 (''admitting fault'' is ''properly consider[ed]'' by DEA to be an ''important factor[ ]'' in the public interest determination). Even so, at all times, the burden of proof on the ultimate issue of whether an applicant's registration is inconsistent with the public interest remains with the Government. 5 U.S.C. § 556(d); 21 CFR 1301.44(d).

Having considered all of the factors,[3] I hold that the Government has met its *prima facie* burden of showing that Respondent has committed acts which render his registration ''inconsistent with the public interest.'' 21 U.S.C. § 823(f). However, I further find that Respondent has accepted responsibility for his misconduct. Moreover, I hold that in the event Respondent produces evidence that he has continued to comply with his PRN contract and has passed all drugs tests administered to him since January 28, 2014, he will have produced sufficient evidence of his successful rehabilitation and will have rebutted the Government's *prima facie* case.

Factor Two—Respondent's Experience in Dispensing Controlled Substances

Pursuant to a longstanding agency regulation, ''[a] prescription for a controlled substance [is not] effective [unless it is] issued for a legitimate medical purpose by an individual practitioner acting in the usual course of his professional practice.'' 21 CFR 1306.04(a). The regulation further provides that ''an order purporting to be a prescription issued not in the usual course of professional treatment . . . is not a prescription within the meaning and intent of [21 U.S.C. 829] and . . . the person issuing it, shall be subject to the penalties provided for violations of the provisions of law relating to controlled substances.'' *Id.*

As the Supreme Court has explained, ''the prescription requirement . . . ensures patients use controlled substances under the supervision of a doctor so as to prevent addiction and recreational abuse. As a corollary, [it] also bars doctors from peddling to patients who crave the drugs for those prohibited uses.'' *Gonzales* v. *Oregon,* 546 U.S. 243, 274 (2006) (citing *United States* v. *Moore,* 423 U.S. 122, 135, 143 (1975)); *United States* v. *Alerre,* 430 F.3d 681, 691 (4th Cir. 2005), *cert. denied,* 574 U.S. 1113 (2006) (the prescription requirement stands as a proscription against doctors acting not ''as a healer[,] but as a seller of wares'').

Under the CSA, it is fundamental that a practitioner must establish and maintain a legitimate doctor-patient relationship in order to act ''in the usual course of . . . professional practice'' and to issue a prescription for a ''legitimate medical purpose.'' *Paul H. Volkman,* 73 FR 30629, 30642 (2008), *pet. for rev. denied,* 567 F.3d 215, 223–24 (6th Cir. 2009); *see also Moore,* 423 U.S. at 142–43 (noting that evidence established that physician exceeded the bounds of professional practice, when ''he gave inadequate physical examinations or none at all,'' ''ignored the results of the tests he did make,'' and ''took no precautions against . . . misuse and diversion''). The CSA, however, generally looks to state law to determine whether a doctor and patient have established a legitimate doctor-patient relationship. *Volkman,* 73 FR at 30642.

As found above, it is undisputed that Respondent issued multiple prescriptions for a total of 720 dosage units of OxyContin 80mg in a manner which violated both the CSA's prescription requirement and Florida law. As the evidence shows, while Respondent wrote the prescriptions for his girlfriend, and maintained that he had done so because she had re-injured her neck while snowboarding on a ski trip, he admitted that shortly after returning from the trip, he had changed her prescription from hydrocodone to OxyContin so that he could obtain the drugs to abuse them and that he took

[3] As for factor one, the recommendation of the state licensing authority, the DOH has not made a recommendation to the Agency as to whether Respondent should be granted a new DEA registration. Moreover, although Respondent is currently licensed by the State and thus satisfies an essential condition for obtaining a registration, *see* 21 U.S.C. §§ 802(21) & 823(f), this '' 'is not dispositive of the public interest inquiry.' '' *George Mathew,* 75 FR 66138, 66145 (2010), *pet. for rev. denied Mathew* v. *DEA,* No. 10–73480, slip op. at 5 (9th Cir., Mar. 16, 2012); *see also Patrick W. Stodola,* 74 FR 20727, 20730 n.16 (2009); *Robert A. Leslie,* 68 FR 15227, 15230 (2003). As the Agency has further held, ''the Controlled Substances Act requires that the Administrator . . . make an independent determination [from that made by state officials] as to whether the granting of controlled substance privileges would be in the public interest.'' *Mortimer Levin,* 57 FR 8680, 8681 (1992). Thus, this factor is not dispositive either for, or against, the granting of Respondent's application. *Paul Weir Battershell,* 76 FR 44359, 44366 (2009) (citing *Edmund Chein,* 74 FR 6580, 6590 (2007), *pet. for rev. denied Chein* v. *DEA,* 533 F.3d 828 (D.C. Cir. 2008)).

Regarding factor three, there is no evidence that Respondent has been convicted of an offense related to the manufacture, distribution or dispensing of controlled substances. However, as there are a number of reasons why a person may never be convicted of an offense falling under this factor, let alone be prosecuted for one, ''the absence of such a conviction is of considerably less consequence in the public interest inquiry'' and thus, it is not dispositive. *David A. Ruben,* 78 FR 38363, 38379 n. 35 (2013) (citing *Dewey C. MacKay,* 75 FR 49956, 49973 (2010), *pet. for rev. denied MacKay* v. *DEA,* 664 F.3d 808 (10th Cir. 2011)).

some portion of the OxyContin he prescribed. Tr. 205 & 207.

An expert retained by the DOH found that Respondent did not maintain medical records, that there was no evidence that he had assessed his girlfriend's medical problems and that his diagnosis was ''inappropriate and inadequate.'' GX 8, at 2. The DOH's expert also found that Respondent had not created a treatment plan. The DOH's expert thus concluded that Respondent's prescribing ''fell well below the standard of care as defined by'' both state and national norms and that he committed ''egregious error'' by prescribing to ''an intimate partner . . . over a prolonged period.'' *Id.* Moreover, Respondent fully admitted that he did not have a proper medical justification to prescribe to his girlfriend and that the prescriptions were issued outside of the usual course of professional practice.

I therefore find that Respondent violated both the CSA's prescription regulation, *see* 21 CFR 1306.04(a), and Florida law, which prohibits the prescribing of ''any controlled substance, other than in the course of the physician's professional practice.'' Fla. Stat. § 458.331(1)(q); *see also* 21 U.S.C. § 841(a)(1) (''[e]xcept as authorized by this subchapter, it shall be unlawful for any person knowingly or intentionally . . . to dispense . . . a controlled substance'').

Against this evidence, Respondent testified as to the training he received in his residency regarding the dispensing of controlled substances, his more than twenty years of experience in dispensing controlled substances as an emergency room physician, and there is no evidence that he has otherwise knowingly diverted controlled substances. He also testified that pursuant to the DOH's order, he had taken a course on the proper prescribing of controlled substances.

Be that as it may, the finding that he violated both the CSA and federal law in issuing the OxyContin prescriptions is evidence of his experience in dispensing controlled substances even if it is also evidence of his noncompliance with applicable laws related to controlled substances. And by itself, this finding is sufficient to support the conclusion that the Government has established a *prima facie* case to deny Respondent's application. I thus reject the ALJ's conclusion that factor two ''neither supports nor contradicts'' Respondent's application.

The ALJ's analysis of Factor Two nonetheless warrants further discussion. More specifically, the ALJ opined that:

> [T]here also is evidence of acts by [Respondent] that do not constitute noncompliance with law but still suggests experience that may threaten the public interest. There is, for example, no law against being familiar with that part of society that deals in illicit drug trafficking. Over the years while he was buying heroin and other drugs on the street, [Respondent] has become very well acquainted with those in the community who have chosen to traffic in heroin. A person with that kind of experience, particularly one authorized to write prescriptions for narcotics and other controlled substances, holds a highly valuable key recognized by those in our society who are likely to try to exploit that authority to advance their own illicit goals.
>
> Restoring to [Respondent] the ability to prescribe controlled substances carries with it some risk, given the unique skill set [Respondent] developed while seeking heroin and other addictive drugs on the street. While he may well be able to resist efforts from those in the trafficking trade to recruit him during periods of sustained stable recovery, were he to relapse those illicit efforts may well prove successful, creating a significant risk of prescription drug diversion.

R.D. at 37–38.

The ALJ's reasoning finds no warrant in the text of Factor Two. Contrary to the ALJ's understanding, factor two does not call for an inquiry into a practitioner's life experience generally or even his experience related in any manner to controlled substances, but rather, only his ''experience in dispensing, or conducting research with respect to controlled substances.'' *See* 21 U.S.C. § 823(f)(2). While writing controlled substance prescriptions which were then traded for street drugs would clearly be actionable misconduct under this factor, there is not even an iota of evidence in this record that Respondent ever traded controlled substance prescriptions for drugs he obtained on the street. In the absence of any such evidence, the ALJ's reasoning is nothing more than unsupported speculation. Accordingly, I reject it.

Factor Four—The Applicant's Compliance With Applicable Laws Related To Controlled Substances

In addition to the prescribing violations discussed above, Respondent committed additional violations of both the CSA and Florida laws when he unlawfully possessed controlled substances and drug paraphernalia. With respect to the 2003 incident, Respondent clearly possessed heroin and drug paraphernalia (*i.e.,* a syringe) when he injected himself with the heroin. Respondent's conduct violated both the CSA, *see* 21 U.S.C. § 844(a) (simple possession), as well as Florida law. *See* Fla. Stat. § 893.13(6)(a) (unlawful possession); *id.* § 893.147(1)(b) (prohibiting use of drug paraphernalia ''[t]o inject . . . a controlled substance in violation of this chapter''); *id.* § 893.145(11) (defining drug paraphernalia as including ''[h]ypodermic syringes, needles, and other objects used, intended for use, or designed for use in parenterally injecting controlled substances into the human body'').

So too, because Respondent did not obtain the OxyContin he admitted to abusing ''pursuant to a valid prescription from a practitioner,'' or obtain it in a manner otherwise authorized by the CSA, he also unlawfully possessed those drugs. 21 U.S.C. § 844(a); *see also* Fla. Stat. § 893.13(6)(a). Likewise, at the time of the 2011 Tampa Airport incident, Respondent was in found to be in possession of heroin, methadone, and Xanax (alprazolam), as well as multiple syringes.

Heroin is a schedule I drug, as it has no accepted medical use; Respondent thus had no authority to possess the drug under his registration. *See* 21 CFR 1308.11(c); GX 2, at 3; 21 U.S.C. § 822(b). Nor did Respondent dispute that he did not have prescriptions for the methadone and Xanax. Thus, here again, Respondent violated the CSA and Florida law by unlawfully possessing controlled substances. 21 U.S.C. § 844(a); *see also* Fla. Stat. § 893.13(6)(a). Moreover, his possession of the syringes also violated Florida law. Fla. Stat. § 893.147 (prohibiting the possession, with intent to use, of drug paraphernalia); *id.* § 893.145(11).

Here again, Respondent does not dispute that he engaged in the above acts. Respondent's extensive record of non-compliance with the CSA and Florida laws related to controlled substances thus provides further support for the conclusion that the Government has established a *prima facie* case to deny his application.

Factor Five—Such Other Conduct Which May Threaten Public Health and Safety

DEA precedent has long recognized that a practitioner's self-abuse of controlled substances constitutes misconduct which is actionable under this factor. *Tony T. Bui,* 75 FR 49979, 49989 (2010) (citing, *inter alia, David E. Trawick,* 53 FR 5326, 5327 (1988); *William H. Carranza*, 51 FR 2771 (1986)). Here, it is undisputed that Respondent has a long and disturbing history of abusing controlled substances. Moreover, Respondent admitted that he had probably been under the influence of controlled substances while at work. This factor thus provides further support for the Government's *prima facie* case.

The ALJ further found that beyond this evidence, Respondent, when ''not in stable and sustained recovery . . . has a demonstrated tendency towards lying in the course of responding to governmental processes.'' R.D. 40. As support for his conclusion, the ALJ explained that ''[h]is decision to deny his possession of heroin when interviewed by a court evaluator following his 2003 overdose is one example; his failure to disclose to the Florida Department of Health that he was diverting OxyContin for his own use in 2006 is another example.'' *Id.*

The ALJ then suggested that Respondent gave false testimony in this proceeding. More specifically, the ALJ reasoned that:

> Further, his testimony in these proceedings, to the effect that the expert evaluation presented to the Florida [DOH] in 2005 by [its] expert was ''100 percent accurate'' cannot be reconciled with the fact that [the expert's] report made no mention of the whole truth here—that [he] had been diverting [his girlfriend's] OxyContin for his own use, for two years. Dr. Greenstein's report was not ''100 percent accurate,'' and it was inaccurate with respect to a material condition that apparently has never been disclosed to the Florida medical authorities.

Id.

However, the ALJ then explained that ''that the evidence does not compel, or even permit, a finding that [Respondent] currently presents a threat to the public due to a predisposition to prevaricate.'' *Id.* at 41. The ALJ further explained that he did ''not detect a *present threat* here,'' as he believed that Respondent ''can be relied upon to be forthright and candid during his recovery.'' *Id.* (emphasis added). Nonetheless, because Factor Five directs that the Agency consider ''conduct which *may threaten* the public health and safety,'' the ALJ then reasoned that ''[a] chronic history of substance abuse, *coupled with a pattern of misleading governmental officials* when the abuse created significant problems for [him], is evidence of conduct that may threaten public health and safety.'' *Id.* (emphasis added).

As stated above, I agree with the ALJ that the evidence shows that Respondent has a chronic history of substance abuse. However, I reject his conclusion that the evidence establishes that Respondent has ''a demonstrated tendency towards lying'' to government officials and a ''pattern of misleading'' them. To be sure, the evidence shows that in 2003, Respondent falsely stated to the evaluator for the pretrial drug intervention program that the heroin found in his vehicle was not his.

The evidence does not, however, support either the ALJ's conclusion that he lied to the Florida Department of Health because he failed to disclose to it that he was using the OxyContin he prescribed to B.B. or the ALJ's suggestion that he gave false testimony in this proceeding. As for the former, there is no evidence that Respondent was ever asked by the DOH's investigator whether he was using the OxyContin and Respondent testified that ''[n]obody from the [DOH] asked, and I didn't volunteer that information.'' Tr. 204. Thus, Respondent did not lie to the DOH. To the extent the ALJ's conclusion rests on the theory that Respondent misled the DOH by failing disclose to it that he was using the OxyContin, the Government made no such argument and the ALJ cited no authority for the proposition that Respondent had a duty under Florida law to disclose this information to the DOH.

So too, I find unwarranted the ALJ's suggestion that Respondent gave false testimony when he testified that the DOH expert's report was ''100 percent accurate.'' R.D. at 40. While the ALJ reasoned that the expert's ''report was not '100 percent accurate' '' because it ''made no mention of the whole truth,'' that being that Respondent was using his girlfriend's OxyContin, there is no evidence that the expert ever interviewed Respondent. Indeed, the expert's report stated that he had only reviewed the investigative file prepared by the DOH.

Moreover, the ALJ's suggestion cannot be sustained upon reviewing the entirety of Respondent's testimony regarding the DOH expert's report. *Cf. Meyers* v. *United States*, 171 F.2d 800, 806–07 (D.C. Cir. 1948) (a ''statement may not be isolated and thereby given a meaning wholly different from the clear significance of the testimony considered as a whole''). As found above, Respondent answered ''absolutely'' when asked by the Government whether he agreed with the expert's conclusions. Tr. 203. Notably, those conclusions included that there was no evidence that he had assessed B.B.'s medical problems and that his ''diagnosis was therefore inappropriate and inadequate''; that his ''care fell well below the standard of care as defined by Florida statute, local and national norms''; that the ''prescription of OxyContin was strikingly inappropriate''; that he committed an ''egregious error'' by providing ''high-volume, long duration'' prescriptions ''of a highly abused narcotic to a patient with whom he had an intimate relationship.'' GX 8, at 2-3. Respondent thus admitted to having committed egregious misconduct. Viewed in this context, his answer to the Government's subsequent question, which asked if there was ''any part of'' the report that he did ''not agree'' with, and to which he answered, ''No. It's 100 percent accurate,'' cannot reasonably be construed as false.[4]

Accordingly, I reject the ALJ's analysis that Respondent has demonstrated a pattern of misleading governmental officials when his substance abuse ''created significant problems for'' him. R.D. at 41. However, his substance abuse alone supports a finding that he has engaged in conduct which may threaten public health and safety.

Summary

As found above, the Government's evidence with respect to factors two, four and five, establishes that Respondent wrote unlawful prescriptions, unlawfully possessed controlled substances, unlawfully possessed drug paraphernalia, and has a long history of substance abuse. Accordingly, the Government has established a *prima facie* case to deny Respondent's application on the ground that his registration ''would be inconsistent with the public interest.'' 21 U.S.C. 823(f). Indeed, in his post-hearing brief, Respondent concedes as much.

SANCTION

As explained above, where the Government has met its *prima facie* burden of showing that issuing a new registration to the applicant would be inconsistent with the public interest, a respondent must come forward with '' ''sufficient mitigating evidence'' '' to show why he can be entrusted with a new registration. *Medicine Shoppe-Jonesborough,* 73 FR 364, 387 (2008) (quoting *Samuel S. Jackson,* 72 FR 23848, 23853 (2007) (quoting *Leo R. Miller,* 53 FR 21931, 21932 (1988))). ''Moreover, because 'past performance is the best predictor of future performance,' *ALRA Labs, Inc.* v. *DEA,* 54 F.3d 450, 452 (7th Cir.1995), [DEA] has repeatedly held that where a registrant has committed acts inconsistent with the public interest, the registrant must accept responsibility for [his] actions and demonstrate that [he] will not engage in future misconduct.'' *Medicine Shoppe,* 73 FR at 387; *see also Jackson,* 72 FR at 23853; *John H.*

[4] Indeed, while the ALJ reasoned that the report was not 100 percent accurate because it made no mention of Respondent's diverting the drugs to his own use, there is not a single statement in the report which appears to be untrue.

Kennedy, 71 FR 35705, 35709 (2006); *Prince George Daniels,* 60 FR 62884, 62887 (1995). *See also Hoxie* v. *DEA,* 419 F.3d at 483 (''admitting fault'' is ''properly consider[ed]'' by DEA to be an ''important factor[]'' in the public interest determination).

Here, the ALJ found that Respondent has accepted responsibility for his misconduct. R.D. at 42. However, the ALJ concluded that Respondent has not produced sufficient evidence of his rehabilitation to rebut the Government's *prima facie* case. *Id.* As the ALJ explained:

> The record before me establishes that when sober and compliant with his recovery program, [Respondent] can be relied upon to avoid engaging in behavior that threatens the public interest. Thus, the risk of relapse becomes critical in determining what steps are warranted when determining the public interest. Here, testimony from Drs. Ziegler and Myers establishes that the risk of relapse is high, and will continue to be high for [Respondent], throughout the five years following the commencement of his recovery. The evidence fully supports a finding that [Respondent's] recovery since February 2011 has been stable and successful. The evidence also supports a finding, however, that insufficient time in stable recovery has passed to support a finding that corrective action has been taken. . . . Surely steps that may lead to effective corrective action have begun, but those steps are not complete, and in the absence of evidence of complete corrective actions the Respondent has not, by a preponderance, presented evidence that would permit the restoration of his . . . [r]egistration.

Id. at 42–43.

I do not dispute the ALJ's premise that ''the risk of relapse [is] critical in determining what steps are warranted'' to protect the public interest. I reject, however, the ALJ's conclusion that until Respondent successfully completes a full five years in the PRN's program, he presents an unacceptable risk of relapse. Not only does the ALJ's conclusion rest on a misreading of the testimony of both Drs. Myers and Dr. Ziegler, it cannot be reconciled with numerous agency precedents which have granted new registrations to self-abusing practitioners who have undergone treatment and demonstrated rehabilitation well before completing five years of treatment in a PRN program.[5] While there may be a variety of factors present in any self-abuse case which support a finding that a practitioner continues to poses an unacceptable risk of relapse (even after completing multiple years of sustained recovery), a categorical rule that a practitioner cannot be registered before completing five years in a PRN program is inherently arbitrary.

Contrary to the ALJ's reasoning, neither the testimony of Dr. Myers nor Dr. Ziegler ''established [that] a material risk of relapse exists during the first five years of stable recovery'' for either professionals generally or Respondent specifically. Indeed, in concluding that Respondent continues to present an unacceptable risk of relapse and will do so until he completes a full five years in the PRN program, the ALJ ignored extensive evidence offered by Respondent to the contrary.

As found above, Dr. Myers testified that the PRN initially used ''a two-year contract'' but found that ''too many docs and . . . healthcare professionals [were] relapsing following the two years.'' Tr. 147. He then explained that PRN lengthened the contract term to five years because ''studies suggest'' that five years ''is a solid recovery time'' which provides ''maximum benefit'' and that ''the percentage of relapse is very low'' for those persons who complete the five-year contract. *Id.*

Notably, Dr. Myers did not testify as to the specific relapse rate of those doctors who had completed a two-year contract. Most significantly, his testimony suggests only that the relapse rate was unacceptably high for those doctors who had completed their two-year contracts and were no longer subject to monitoring and other contract requirements. This, of course, says nothing about the relapse rate of those doctors who continued to be subject to monitoring after completing a two-year contract.

As for Dr. Myers' further testimony that various studies suggests that five years ''is a solid recovery time'' which provides ''maximum benefit'' and that the ''percentage of relapse is very low'' for those persons who complete a five-year contract, while this explains why PRNs have lengthened their contracts to five years, it too says nothing about the actual risk of relapse for those physicians who remain subject to, and in compliance with, a PRN contract through years three, four, and five of their contracts.

To be sure, Dr. Ziegler testified that PRN contracts ''used to be three years'' but were ''extended to five years because . . . some research studies . . . showed that three years may not be long enough and that relapses did frequently occur at the three-year point.'' Tr. 325–26. However, even assuming that these studies involved physicians who were still subject to PRN monitoring at the time of their relapses, no further testimony was elicited from Dr. Ziegler as to what the actual rate of relapse was at three years and various times thereafter.[6]

In short, neither the testimony of Dr. Myers nor of Dr. Ziegler establishes what the relapse rate is for physicians who remain subject to monitoring during the fourth and fifth years of a PRN contract as a general matter, let alone for physicians who present particular risk factors for relapse. And in any event, Respondent is now well past three years of successful compliance with his PRN contract and through the closing of the record, he has passed every drug test since seeking treatment in February 2011.

Moreover, both Dr. Myers and Ziegler offered extensive evidence of Respondent's commitment to his recovery and compliance with his PRN contract. Yet this evidence is barely acknowledged in the recommended decision. Notably, Dr. Myers, who, in addition to being a Diplomate of the American Board of Addiction Medicine and a Fellow of the American Society of Addiction Medicine, has twenty-five years of experience working with chemically dependent persons, with twenty of those years focused on recovering professionals, testified that he employs Respondent in his practice, that he considers him safe, and that if he had ''any doubt that [Respondent] was risky, he couldn't use him.'' Tr. at 133. Dr. Myers also testified that while Respondent will never be cured, he believes that Respondent is fully committed to his recovery, that he ''is making it'' and that he will ''continue to make it.'' *Id.* at 132.

Dr. Ziegler, who is board certified in Psychiatry and Addiction Psychiatry, as well as Addiction Medicine, and has focused her professional activities on the treatment of addiction, testified that

[5] *See Perry T. Dobyns,* 77 FR 45656 (2012) (granting restricted registration based on less than three years of demonstrated sobriety following physician's relapse); *Stephen Reitman,* 76 FR 60889 (2011) (granting restricted registration where evidence at hearing established only one year of sobriety); *Michael Moore,* 76 FR 45867 (2011) (suspending but not revoking registration where physician, who abused marijuana, had demonstrated sobriety for less than four years); *Karen Kruger,* 69 FR 7016 (2004) (granting registration after three and a half years of demonstrated sobriety); *Jimmy H. Conway, Jr.,* 64 FR 32271 (1999) (granting registration after three years of demonstrated sobriety).

[6] The conclusion that because PRN programs have extended their monitoring contracts to five years, a physician under such a contract invariably presents an unacceptable risk of relapse until he completes a full five years of compliance, was refuted by Dr. Ziegler's testimony. *See* Tr. 317–18. The Agency's case law also suggests that this conclusion is inconsistent with the understanding of state medical boards, which have frequently issued new licenses to practitioners before the practitioners have demonstrated five years of sobriety.

Respondent has passed all of his urine screens and ''has been entirely compliant with his contract.'' Tr. 312. In his decision, the ALJ asserted that, because the PRN contract obligates the PRN ''to assume an advocacy role'' with licensing agencies provided Respondent complied with the terms of his contract, her testimony ''should be treated as advocacy, rather than as independent and unbiased medical testimony.'' R.D. at 32. However, Dr. Ziegler further explained that PRN will ''withdraw our advocacy if the person no longer warrants that advocacy.'' Tr. 330. Accordingly, I do not find that the existence of the PRN contractual provision warrants giving less than full weight to her testimony.[7]

While Dr. Ziegler testified that she could not guarantee that Respondent would never relapse, she also testified that granting Respondent prescribing authority would not pose a safety issue. As she explained:

> people at his stage of recovery and at his point in monitoring with us, lots of those practitioners hold a DEA certificate and use them in the course of their practice of medicine. . . . [H]aving prescribing privileges, there's a certain amount of risk associated with it. But at this stage of the game it certainly is not something we would be concerned about because he is doing very well.

Tr. 317–18.

Dr. Ziegler also testified that when PRN represents to a licensing body that a practitioner is safe to practice, its representation is based on the reports it has received from the physician's treating professional who is aware of the physician's individual situation, the results of the random drugs screens it has conducted, and its contact with the physician as he/she goes through the program. *Id.* at 326–27. And she further testified ''that when somebody is in our monitoring program and has done well for a period of time [he/she is] as safe to practice with reasonable skill and safety as someone who has never been identified as having a problem.'' *Id.* at 327.

The Government also argues that Respondent's application should be denied because he failed to produce evidence supporting his application ''from independent medical professionals.'' Gov. Br. 20. It is not entirely clear what, in the Government's view, qualifies a medical professional as ''independent.'' However, in self-abuse cases, this Agency has never required a practitioner to present evidence from a medical professional who either does not have a doctor-patient relationship with the physician or is not otherwise involved in the physician's recovery.[8] Rather, the Agency has frequently granted new registrations to practitioners based on the reliable testimony of treating professionals. To the extent the Government believes that neither Dr. Myers nor Dr. Ziegler were objective witnesses in their assessments of Respondent's risk of relapse, it bears noting that there is independent medical evidence of Respondent's successful rehabilitation—this being the numerous random drug tests he has passed. And nothing prevented the Government from retaining an expert who could have reviewed Respondent's treatment records and rendered an opinion on whether he presents an unacceptable risk of relapse.

The Government also argues that because of ''his long-term drug abuse,'' Respondent should not be granted a registration until he has completed a minimum of ''five years of monitored treatment.'' Gov. Br. at 19. Notably, the Government produced no evidence establishing that physicians with a long history of abuse have a greater risk of relapse than other physicians. Indeed, when asked by the Government whether there is a correlation between a physician's length of abuse and the likelihood of relapse, Dr. Myers testified that while ''there are a number of factors which can help predict relapses,'' he did not believe that a correlation has been established between the length of abuse and the likelihood of relapse.

The Government offered no evidence to refute this testimony. Moreover, while Dr. Myers testified that there are a number of factors that predict relapses, the Government did not elicit any testimony from Dr. Myers or offer any other evidence establishing what those factors are and whether they are present in Respondent's case.

It bears noting that while Respondent had the burden of producing sufficient evidence to establish that he has undertaken sufficient corrective measures such that he is not likely to re-offend, the Government, at all times, retains the burden of proving that granting his application is inconsistent with the public interest. 5 U.S.C. 556(d); 21 CFR 1301.44(d). Accordingly, I reject the Government's contention that Respondent presents an unacceptable risk of relapse until he successfully completes a full five years in the PRN program.

I therefore conclude that provided Respondent has continued to comply with his PRN contract and has passed all drug tests since the closing of the record, he is entitled to be registered. Accordingly, Respondent is directed to provide evidence of all drug test results conducted since January 28, 2014 and his continued compliance with his PRN contract.[9] In the event Respondent has failed any of the drug tests, or has not remained in compliance with his PRN contract, his application shall be denied. In the event he has passed all of these tests and remained in compliance, he shall be granted a registration, subject to the following conditions which are supported by the record.

First, the Government notes that Respondent can walk away from his PRN contract at any time. While there is evidence that in the event Respondent were to do so, the PRN would report him to the DOH, the record does not establish what action the DOH would take in response. Accordingly, I conclude that Respondent's registration shall be conditioned on his remaining in compliance with his PRN contract. In the event Respondent fails to comply with his PRN contract, his registration shall be subject to an Immediate Suspension Order.

Second, while Respondent's PRN contract expires in May 2016, Dr. Ziegler noted that PRN offers its clients a licensure-long contract. Moreover, in his testimony Respondent acknowledged that his recovery will be ''a lifelong struggle'' and expressed a willingness to enter into a licensure-long contract; he also acknowledged that DEA could require that he stay in the PRN program. Accordingly, I conclude that Respondent's registration shall be conditioned on his entering into a licensure-long contract upon the completion of his initial five-year contract. Moreover, if, following the completion of his initial five-year contract, Respondent fails to enter into a licensure-long contract, his

[7] Notably, other than the contractual provision, there is no evidence on Dr. Ziegler's part of the existence of any other of the typical sources of partiality.

Of further note, neither the Government nor the ALJ identify a specific instance in which Dr. Ziegler's testimony lacked objectivity.

As for Dr. Myers, the Government argues that his testimony should be given ''the same scrutiny as Dr. Ziegler['s]'' because he has a long association with PRN and ''should be viewed as an agent of PRN.'' Gov. Br. at 21–22. Here again, I find the Government's argument unpersuasive and do not find that any portion of his testimony lacks credibility.

[8] It is far from clear whether, under Florida law, Dr. Ziegler, as PRN program director, has a doctor-patient relationship with the PRN's clients.

[9] Respondent shall provide this evidence to the Office of the Administrator no later than thirty (30) days from the date of this Order. Respondent shall also provide a copy of his filing to Government counsel. In the event Respondent fails to comply, his application will be denied.

registration shall be subject to an Immediate Suspension Order.

Third, Respondent may not accept any position as a physician without first obtaining approval of the PRN program. Respondent's acceptance of a position without first obtaining the PRN's approval shall subject his registration to suspension or revocation.

Fourth, Respondent shall enter into an agreement with the PRN pursuant to which he authorizes and directs the PRN to report the results of any drug test he fails to the nearest DEA Field Division Office; a copy of this agreement must be provided to the DEA Field Division Office prior to the issuance of the registration. In the event Respondent is ordered to undergo a drug test and fails to comply in accordance with the PRN's rules, this shall be deemed a failed test. In the event Respondent fails any drug test, his registration shall be subject to an Immediate Suspension Order.

Respondent is prohibited from possessing any controlled substances except for those he obtains pursuant to a lawful prescription or which are lawfully dispensed to him by a duly authorized health care provider. Respondent shall not order any controlled substances, nor accept any controlled substances (including manufacturer's samples) from any person (other than those which are lawfully dispensed to him), including a manufacturer's or distributor's sales representative. Moreover, Respondent shall not be authorized to administer controlled substances to any person until such time as PRN approves such activity; upon such approval, Respondent shall be authorized to possess such controlled substances. In the event Respondent violates the provisions of this paragraph, his registration shall be subject to an Immediate Suspension Order.

If PRN approves Respondent to engage in the administration of controlled substances, Respondent shall provide a copy of a letter from PRN to this effect to the nearest DEA Field Division Office prior to engaging in such activity.

ORDER

Pursuant to the authority vested in me by 21 U.S.C. 823(f) and 28 CFR 0.100(b), I order that the application of Abbas E. Sina, M.D., for a DEA Certificate of Registration as a practitioner, be, and it hereby is, held in abeyance pending his submission of all drug test results since January 28, 2014. I further order that in the event Respondent has passed all drug tests since January 28, 2014 and remained in compliance with his PRN contract, his application shall be granted subject to the conditions set forth above. I further order that in the event Respondent has not passed all drug tests since January 28, 2014 or other remained in compliance with his PRN contract, or fails to submit this evidence within the time set forth above, his application shall be denied. This Order is effective immediately.

Date: May 15, 2015

Michele M. Leonhart,

Administrator.

[FR Doc. 2015–21732 Filed 9–1–15; 8:45 am]

BILLING CODE 4410–09–P

DEPARTMENT OF JUSTICE

Office of Justice Programs

[OJP (OJP) Docket No. 1695]

Meeting of the Public Safety Officer Medal of Valor Review Board

AGENCY: Bureau of Justice Assistance, Justice.

ACTION: Notice of meeting.

SUMMARY: This is an announcement of a meeting (in-person and virtual) of the Public Safety Officer Medal of Valor Review Board, primarily intended to consider nominations for the 2014–2015 Medal of Valor. Additional issues of importance to the Board will also be discussed, to include but not limited to a discussion about the pending presentation ceremony to recognize and award 2013–2014 Medal of Valor to the recipients. The meeting/conference call date and time is listed below.

DATES: September 22, 2015, 9:00 a.m. to 12:30 p.m. (EST).

ADDRESSES: This meeting will be held at the Office of Justice Programs, and will also support participation of Member(s) via conference call-in.

FOR FURTHER INFORMATION CONTACT: Gregory Joy, Policy Advisor, Bureau of Justice Assistance, Office of Justice Programs, 810 7th Street NW., Washington, DC 20531, by telephone at (202) 514–1369, toll free (866) 859–2687, or by email at *Gregory.joy@usdoj.gov.*

SUPPLEMENTARY INFORMATION: The Public Safety Officer Medal of Valor Review Board carries out those advisory functions specified in 42 U.S.C. 15202. Pursuant to 42 U.S.C. 15201, the President of the United States is authorized to award the Public Safety Officer Medal of Valor, the highest national award for valor by a public safety officer.

The purpose of this meeting/conference call is primarily to consider nominations for the 2014–2015 Medal of Valor, and to make a limited number of recommendations for submission to the U.S. Attorney General. Additional issues of importance to the Board will also be covered, to include but not limited to a discussion about the pending presentation ceremony to recognize and award the 2013–2014 Medal of Valor to those recipients.

This meeting is open to the public at the Office of Justice Programs. For security purposes, members of the public who wish to participate must register at least seven (7) days in advance of the meeting/conference call by contacting Mr. Joy. All interested participants will be required to meet at the Bureau of Justice Assistance, Office of Justice Programs; 810 7th Street NW., Washington, DC and will be required to sign in at the front desk. Note: Photo identification will be required for admission. Additional identification documents may be required.

Access to the meeting will not be allowed without prior registration. Anyone requiring special accommodations should contact Mr. Joy at least seven (7) days in advance of the meeting. Please submit any comments or written statements for consideration to the Review Board in writing at least seven (7) days in advance of the meeting date.

Gregory Joy,

Policy Advisor/Designated Federal Officer, Bureau of Justice Assistance.

[FR Doc. 2015–21565 Filed 9–1–15; 8:45 am]

BILLING CODE 4410–18–P

DEPARTMENT OF LABOR

Office of the Secretary

Agency Information Collection Activities; Submission for OMB Review; Comment Request; Weekly Claims and Extended Benefits Data and Weekly Initial and Continued Weeks Claimed

ACTION: Notice.

SUMMARY: The Department of Labor (DOL) is submitting the Employment and Training Administration (ETA) sponsored information collection request (ICR) titled, ''Weekly Claims and Extended Benefits Data and Weekly Initial and Continued Weeks Claimed,'' to the Office of Management and Budget (OMB) for review and approval for continued use, without change, in accordance with the Paperwork Reduction Act of 1995 (PRA), 44 U.S.C. 3501 *et seq.* Public comments on the ICR are invited.

DATES: The OMB will consider all written comments that agency receives on or before *October 2, 2015*.

ADDRESSES: A copy of this ICR with: Applicable supporting documentation; including a description of the likely respondents, proposed frequency of response, and estimated total burden may be obtained free of charge from the RegInfo.gov Web site at *http://www.reginfo.gov/public/do/PRAViewICR?ref_nbr=201508-1205-005* (this link will only become active on the day following publication of this notice) or by contacting Michel Smyth by telephone at 202–693–4129, TTY 202–693–8064, (these are not toll-free numbers) or by email at *DOL_PRA_PUBLIC@dol.gov.*

Submit comments about this request by mail or courier to the Office of Information and Regulatory Affairs, Attn: OMB Desk Officer for DOL–ETA, Office of Management and Budget, Room 10235, 725 17th Street NW., Washington, DC 20503; by Fax: 202–395–5806 (this is not a toll-free number); or by email: *OIRA_submission@omb.eop.gov.* Commenters are encouraged, but not required, to send a courtesy copy of any comments by mail or courier to the U.S. Department of Labor-OASAM, Office of the Chief Information Officer, Attn: Departmental Information Compliance Management Program, Room N1301, 200 Constitution Avenue NW., Washington, DC 20210; or by email: *DOL_PRA_PUBLIC@dol.gov.*

FOR FURTHER INFORMATION CONTACT: Michel Smyth by telephone at 202–693–4129, TTY 202–693–8064, (these are not toll-free numbers) or by email at *DOL_PRA_PUBLIC@dol.gov.*

Authority: 44 U.S.C. 3507(a)(1)(D).

SUPPLEMENTARY INFORMATION: This ICR seeks to extend PRA authority for the Weekly Claims and Extended Benefits Data and Weekly Initial and Continued Weeks Claimed information collection. Forms ETA–538 and ETA–539 are computerized weekly reports containing information on initial Unemployment Insurance claims and continued weeks claimed, important economic indicators that a State reports. Form ETA–538 provides information allowing release of national unemployment claims information to the public five days after the close of the reference period. Form ETA–539 contains more detailed weekly claims information and the State's 13-week insured unemployment rate used to determine eligibility for the Extended Benefits program. Social Security Act section 303(a)(6) and Federal-State Extended Unemployment Compensation Act of 1970 section 203 authorize this information collection. *See* 42 U.S.C. 503(a)(6) and 26 U.S.C. 3304 note.

This information collection is subject to the PRA. A Federal agency generally cannot conduct or sponsor a collection of information, and the public is generally not required to respond to an information collection, unless it is approved by the OMB under the PRA and displays a currently valid OMB Control Number. In addition, notwithstanding any other provisions of law, no person shall generally be subject to penalty for failing to comply with a collection of information that does not display a valid Control Number. *See* 5 CFR 1320.5(a) and 1320.6. The DOL obtains OMB approval for this information collection under Control Number 1205–0028.

OMB authorization for an ICR cannot be for more than three (3) years without renewal, and the current approval for this collection is scheduled to expire on October 31, 2015. The DOL seeks to extend PRA authorization for this information collection for three (3) more years, without any change to existing requirements. The DOL notes that existing information collection requirements submitted to the OMB receive a month-to-month extension while they undergo review. For additional substantive information about this ICR, see the related notice published in the **Federal Register** on March 27, 2015 (80 FR 16458).

Interested parties are encouraged to send comments to the OMB, Office of Information and Regulatory Affairs at the address shown in the **ADDRESSES** section within thirty (30) days of publication of this notice in the **Federal Register**. In order to help ensure appropriate consideration, comments should mention OMB Control Number 1205–0028. The OMB is particularly interested in comments that:

- Evaluate whether the proposed collection of information is necessary for the proper performance of the functions of the agency, including whether the information will have practical utility;
- Evaluate the accuracy of the agency's estimate of the burden of the proposed collection of information, including the validity of the methodology and assumptions used;
- Enhance the quality, utility, and clarity of the information to be collected; and
- Minimize the burden of the collection of information on those who are to respond, including through the use of appropriate automated, electronic, mechanical, or other technological collection techniques or other forms of information technology, *e.g.*, permitting electronic submission of responses.

Agency: DOL–ETA.

Title of Collection: Weekly Claims and Extended Benefits Data and Weekly Initial and Continued Weeks Claimed.

OMB Control Number: 1205–0028.

Affected Public: State, Local, and Tribal Governments.

Total Estimated Number of Respondents: 53.

Total Estimated Number of Responses: 5,512.

Total Estimated Annual Time Burden: 3,675 hours.

Total Estimated Annual Other Costs Burden: $0.

Dated: August 27, 2015.

Michel Smyth,

Departmental Clearance Officer.

[FR Doc. 2015–21726 Filed 9–1–15; 8:45 am]

BILLING CODE 4510–FW–P

NATIONAL AERONAUTICS AND SPACE ADMINISTRATION

[Notice: (15–070)]

NASA Federal Advisory Committees; Public Nominations

AGENCY: National Aeronautics and Space Administration.

ACTION: Annual Invitation for Public Nominations by U.S. Citizens for Service on NASA Federal Advisory Committees.

SUMMARY: NASA announces its annual invitation for public nominations for service on NASA Federal advisory committees. U.S. citizens may submit self-nominations for consideration as potential members of NASA's Federal advisory committees. NASA's Federal advisory committees have member vacancies from time to time throughout the year, and NASA will consider self-nominations to fill such intermittent vacancies. NASA is committed to selecting members to serve on its Federal advisory committees based on their individual expertise, knowledge, experience, and current/past contributions to the relevant subject area.

DATES: The deadline for NASA receipt of all public nominations is September 30, 2015.

ADDRESSES: Self-nominations from interested U.S. citizens must be sent electronically to NASA in letter form, be signed, and must include the name of specific NASA Federal advisory committee of interest for NASA consideration. Self-nomination letters are limited to specifying interest in only

one (1) NASA Federal advisory committee per year. The following additional information is required to be attached to each self-nomination letter (*i.e.*, cover letter): (1) Professional resume (one-page maximum); (2) professional biography (one-page maximum). Please submit the self-nomination package as a single package containing cover letter and both required attachments to *hq-nasanoms@mail.nasa.gov.* All public self-nomination packages must be submitted electronically via email to NASA; paper-based documents sent through postal mail (hard-copies) will not be accepted. NOTE: Nomination letters that are noncompliant with inclusion of the three (3) mandatory documents listed above will not receive further consideration by NASA.

FOR FURTHER INFORMATION CONTACT: To view advisory committee charters and obtain further information on NASA's Federal advisory committees, please visit the NASA Advisory Committee Management Division Web site noted below. For any questions, please contact Ms. Marla King, Advisory Committee Specialist, Advisory Committee Management Division, Office of International and Interagency Relations, NASA Headquarters, Washington, DC 20546, (202) 358–1148.

SUPPLEMENTARY INFORMATION: NASA's six (6) currently chartered Federal advisory committees are listed below. The individual charters may be found at the NASA Advisory Committee Management Division's Web site at *http://oiir.hq.nasa.gov/acmd.html*:

- *Aerospace Safety Advisory Panel*—The Aerospace Safety Advisory Panel provides advice and recommendations to the NASA Administrator and the Congress on matters related to safety, and performs such other duties as the NASA Administrator may request.
- *Applied Sciences Advisory Committee*—The Applied Sciences Advisory Committee provides advice and makes recommendations to the Director, Earth Science Division, Science Mission Directorate, NASA Headquarters, on Applied Sciences programs, policies, plans, and priorities.
- *International Space Station (ISS) Advisory Committee*—The ISS Advisory Committee provides advice and recommendations to the NASA Associate Administrator for Human Exploration and Operations Mission Directorate on all aspects related to the safety and operational readiness of the ISS. It addresses additional issues and/or areas of interest identified by the NASA Associate Administrator for Human Exploration and Operations Mission Directorate.
- *International Space Station (ISS) National Laboratory Advisory Committee*—The ISS National Laboratory Advisory Committee monitors, assesses, and makes recommendations to the NASA Administrator regarding effective utilization of the ISS as a national laboratory and platform for research, and such other duties as the NASA Administrator may request.
- *NASA Advisory Council*—The NASA Advisory Council (NAC) provides advice and recommendations to the NASA Administrator on Agency programs, policies, plans, financial controls, and other matters pertinent to the Agency's responsibilities. The NAC consists of the Council and five (5) Committees: Aeronautics; Human Exploration and Operations; Institutional; Science; and Technology, Innovation and Engineering. NOTE: All nominations for the NASA Advisory Council must indicate the specific entity of interest, *i.e.*, either the Council or one of its five (5) Committees.
- *National Space-Based Positioning, Navigation and Timing (PNT) Advisory Board*—The National Space-Based PNT Advisory Board provides advice to the PNT Executive Committee (comprised of nine stakeholder Federal agencies, of which NASA is a member) on U.S. space-based PNT policy, planning, program management, and funding profiles in relation to the current state of national and international space-based PNT services.

Patricia D. Rausch,

Advisory Committee Management Officer, National Aeronautics and Space Administration.

[FR Doc. 2015–21640 Filed 9–1–15; 8:45 am]

BILLING CODE 7510–13–P

OFFICE OF SPECIAL COUNSEL

Agency Information on Public Availability of OSC FY 2014 Service Contract Inventory

AGENCY: Office of Special Counsel.

ACTION: Second notice.

SUMMARY: The U.S. Office of Special Counsel, in accordance with section 743(c) of Division C of the Consolidated Appropriations Act, 2010 (*Pub. L. 111–117,* 123 Stat. 3034, 3216), is announcing the availability of OSC's service contract inventory for fiscal year (FY) 2014. This inventory provides information on service contract actions that exceeded $25,000 that OSC made in FY 2014.

FOR FURTHER INFORMATION CONTACT: Karl Kammann, Chief Financial Officer, at 1730 M St. NW., Suite 300, Washington, DC 20036, or by facsimile at (202) 254–3711.

SUPPLEMENTARY INFORMATION: On December 16, 2009, the Consolidated Appropriations Act, 2010 (Consolidated Appropriations Act), *Public Law 111–117,* became law. Section 743(a) of the Consolidated Appropriations Act, titled, ''Service Contract Inventory Requirement,'' requires agencies to submit to the Office of Management and Budget (OMB), an annual inventory of service contracts awarded or extended through the exercise of an option on or after April 1, 2010, and describes the contents of the inventory. The contents of the inventory must include:

(A) A description of the services purchased by the executive agency and the role the services played in achieving agency objectives, regardless of whether such a purchase was made through a contract or task order;

(B) The organizational component of the executive agency administering the contract, and the organizational component of the agency whose requirements are being met through contractor performance of the service;

(C) The total dollar amount obligated for services under the contract and the funding source for the contract;

(D) The total dollar amount invoiced for services under the contract;

(E) The contract type and date of award;

(F) The name of the contractor and place of performance;

(G) The number and work location of contractor and subcontractor employees, expressed as full-time equivalents for direct labor, compensated under the contract;

(H) Whether the contract is a personal services contract; and

(I) Whether the contract was awarded on a noncompetitive basis, regardless of date of award.

Section 743(a)(3)(A) through (I) of the Consolidated Appropriations Act. Section 743(c) of the Consolidated Appropriations Act requires agencies to ''publish in the **Federal Register** a notice that the inventory is available to the public.''

Consequently, through this notice, we are announcing that OSC's service contract inventory for FY 2014 is available to the public. The inventory provides information on service contract actions over $25,000 that OSC made in FY 2014. OSC's finance section has posted its inventory, and a summary of the inventory can be found at our homepage at the following link:

https://osc.gov/Pages/Resources-ReportsAndInfo.aspx.

Comments should be received no later than October 2, 2015.

Dated: August 26, 2015.

Carolyn N. Lerner,

Special Counsel.

[FR Doc. 2015–21779 Filed 9–1–15; 8:45 am]

BILLING CODE 7405–01–P

SECURITIES AND EXCHANGE COMMISSION

[Release No. 34–75772; File No. SR–EDGX–2015–39]

Self-Regulatory Organizations; EDGX Exchange, Inc.; Notice of Filing and Immediate Effectiveness of a Proposed Rule Change To Amend Rule 13.4 Relating to the Reactivation of NSX

August 27, 2015.

Pursuant to section 19(b)(1) of the Securities Exchange Act of 1934 (the ''Act''),[1] and Rule 19b–4 thereunder,[2] notice is hereby given that on August 18, 2015, EDGX Exchange, Inc. (the ''Exchange'' or ''EDGX'') filed with the Securities and Exchange Commission (''Commission'') the proposed rule change as described in Items I and II below, which Items have been prepared by the Exchange. The Exchange has designated this proposal as a ''non-controversial'' proposed rule change pursuant to section 19(b)(3)(A) of the Act[3] and Rule 19b–4(f)(6)(iii) thereunder,[4] which renders it effective upon filing with the Commission. The Commission is publishing this notice to solicit comments on the proposed rule change from interested persons.

I. Self-Regulatory Organization's Statement of the Terms of Substance of the Proposed Rule Change

The Exchange filed a proposal to amend Rule 13.4(a) regarding the public disclosure of the sources of data that the Exchange utilizes when performing: (i) Order handling; (ii) order routing; and (iii) related compliance processes to reflect reactivation of the National Stock Exchange, Inc. (''NSX'') on or about August 31, 2015.

The text of the proposed rule change is available at the Exchange's Web site at *www.batstrading.com,* at the principal office of the Exchange, and at the Commission's Public Reference Room.

[1] 15 U.S.C. 78s(b)(1).

[2] 17 CFR 240.19b–4.

[3] 15 U.S.C. 78s(b)(3)(A).

[4] 17 CFR 240.19b–4(f)(6)(iii).

II. Self-Regulatory Organization's Statement of the Purpose of, and Statutory Basis for, the Proposed Rule Change

In its filing with the Commission, the Exchange included statements concerning the purpose of and basis for the proposed rule change and discussed any comments it received on the proposed rule change. The text of these statements may be examined at the places specified in Item IV below. The Exchange has prepared summaries, set forth in sections A, B, and C below, of the most significant parts of such statements.

(A) Self-Regulatory Organization's Statement of the Purpose of, and Statutory Basis for, the Proposed Rule Change

1. Purpose

The Exchange proposes to update Rule 13.4(a) regarding the public disclosure of the sources of data that the Exchange utilizes when performing: (i) Order handling; (ii) order routing; and (iii) related compliance processes to reflect reactivation of the NSX on or about August 31, 2015. The NSX informed the UTP Securities Information Processor (''UTP SIP'') that, subject to regulatory approval, it is projecting to reactivate its status as an operating participant for quotation and trading of Nasdaq-listed securities under the Unlisted Trading Privileges (''UTP'') Plan on or about August 31, 2015. Specifically, the Exchange proposes to amend Rule 13.4(a) to include the NSX by stating it will utilize NSX market data from the CQS/UQDF for purposes of order handling, routing, and related compliance processes.

2. Statutory Basis

The Exchange believes that the proposed rule change is consistent with section 6(b) of the Act,[5] in general, and furthers the objectives of section 6(b)(5) of the Act,[6] in particular, in that it is designed to prevent fraudulent and manipulative acts and practices, to promote just and equitable principles of trade, to foster cooperation and coordination with persons engaged in regulating, clearing, settling, processing information with respect to, and facilitating transactions in securities, to remove impediments to and perfect the mechanism of a free and open market and a national market system, and, in general, to protect investors and the public interest.

[5] 15 U.S.C. 78f.

[6] 15 U.S.C. 78f(b)(5).

The Exchange believes that its proposal to update Exchange Rule 13.4(a) to include NSX would ensure that rule correctly identifies and publicly states on a market-by-market basis all of the specific network processor and proprietary data feeds that the Exchange utilizes for the handling, routing, and execution of orders, and for performing the regulatory compliance checks related to each of those functions. The proposed rule change also removes impediments to and perfects the mechanism of a free and open market and protects investors and the public interest because it provides additional specificity, clarity and transparency.

(B) Self-Regulatory Organization's Statement on Burden on Competition

The Exchange believes its proposed rule change would not impose any burden on competition that is not necessary or appropriate in furtherance of the purposes of the Act. To the contrary, the Exchange believes the proposal would enhance competition because including all of the exchanges enhances transparency and enables investors to better assess the quality of the Exchange's execution and routing services.

(C) Self-Regulatory Organization's Statement on Comments on the Proposed Rule Change Received From Members, Participants or Others

The Exchange has not solicited, and does not intend to solicit, comments on this proposed rule change. The Exchange has not received any unsolicited written comments from Members or other interested parties.

III. Date of Effectiveness of the Proposed Rule Change and Timing for Commission Action

The Exchange has designated this rule filing as non-controversial under section 19(b)(3)(A) of the Act[7] and paragraph (f)(6) of Rule 19b–4 thereunder.[8] The proposed rule change effects a change that (A) does not significantly affect the protection of investors or the public interest; (B) does not impose any significant burden on competition; and (C) by its terms, does not become operative for 30 days after the date of the filing, or such shorter time as the Commission may designate if consistent with the protection of investors and the public interest; provided that the self-regulatory organization has given the Commission written notice of its intent to file the proposed rule change, along

[7] 15 U.S.C. 78s(b)(3)(A).

[8] 17 CFR 240.19b–4.

with a brief description and text of the proposed rule change, at least five business days prior to the date of filing of the proposed rule change, or such shorter time as designated by the Commission.[9]

A proposed rule change filed under Rule 19b–4(f)(6)[10] normally does not become operative prior to 30 days after the date of the filing. However, pursuant to Rule 19b4(f)(6)(iii),[11] the Commission may designate a shorter time if such action is consistent with the protection of investors and the public interest. The Exchange has asked the Commission to waive the 30-day operative delay so that the proposal may become operative immediately upon filing. The Exchange believes that waiver of the 30-day operative delay would benefit investors because it would enable the Exchange to immediately enhance transparency and to accommodate the reactivation of the NSX on or about August 31, 2015 as an operating participant for quotation and trading of Nasdaq-listed securities under the UTP Plan. The Commission believes that waiving the 30-day operative delay is consistent with the protection of investors and the public interest because it will enable the Exchange's rules to accommodate the reactivation of the NSX and to identify, without delay, all of the specific network processor and proprietary data feeds that the Exchange utilizes for the handling, routing, and execution of orders, and for performing the regulatory compliance checks related to each of those functions. Therefore, the Commission hereby waives the 30-day operative delay and designates the proposed rule change to be operative upon filing with the Commission.[12]

At any time within 60 days of the filing of the proposed rule change, the Commission may summarily temporarily suspend such rule change if it appears to the Commission that such action is: (1) Necessary or appropriate in the public interest; (2) for the protection of investors; or (3) otherwise in furtherance of the purposes of the Act. If the Commission takes such action, the Commission shall institute proceedings to determine whether the proposed rule should be approved or disapproved.

IV. Solicitation of Comments

Interested persons are invited to submit written data, views and arguments concerning the foregoing, including whether the proposal is consistent with the Act. Comments may be submitted by any of the following methods:

Electronic Comments

- Use the Commission's Internet comment form (*http://www.sec.gov/rules/sro.shtml*); or
- Send an email to *rule-comments@sec.gov.* Please include File No. SR–EDGX–2015–39 on the subject line.

Paper Comments

- Send paper comments in triplicate to Secretary, Securities and Exchange Commission, 100 F Street NE., Washington, DC 20549–1090.

All submissions should refer to File No. SR–EDGX–2015–39. This file number should be included on the subject line if email is used. To help the Commission process and review your comments more efficiently, please use only one method. The Commission will post all comments on the Commission's Internet Web site (*http://www.sec.gov/rules/sro.shtml*). Copies of the submission, all subsequent amendments, all written statements with respect to the proposed rule change that are filed with the Commission, and all written communications relating to the proposed rule change between the Commission and any person, other than those that may be withheld from the public in accordance with the provisions of 5 U.S.C. 552, will be available for Web site viewing and printing in the Commission's Public Reference Room, 100 F Street NE., Washington, DC 20549, on official business days between the hours of 10:00 a.m. and 3:00 p.m. Copies of such filing will also be available for inspection and copying at the principal office of the Exchange. All comments received will be posted without change; the Commission does not edit personal identifying information from submissions. You should submit only information that you wish to make available publicly. All submissions should refer to File No. SR–EDGX–2015–39 and should be submitted on or before September 23, 2015.

For the Commission, by the Division of Trading and Markets, pursuant to delegated authority.[13]

Robert W. Errett,

Deputy Secretary.

[FR Doc. 2015–21666 Filed 9–1–15; 8:45 am]

BILLING CODE 8011–01–P

[9] The Exchange has fulfilled this requirement.

[10] 17 CFR 240.19b–4(f)(6).

[11] 17 CFR 240.19b–4(f)(6)(iii).

[12] For purposes only of waiving the operative date of this proposal, the Commission has considered the proposed rule's impact on efficiency, competition, and capital formation. 15 U.S.C. 78c(f).

[13] 17 CFR 200.30–3(a)(12).

SECURITIES AND EXCHANGE COMMISSION

[Release No. 34–75769; File No. SR–BATS–2015–65]

Self-Regulatory Organizations; BATS Exchange, Inc.; Notice of Filing and Immediate Effectiveness of a Proposed Rule Change To Amend Rule 11.26 Relating to the Reactivation of NSX

August 27, 2015.

Pursuant to Section 19(b)(1) of the Securities Exchange Act of 1934 (the ''Act''),[1] and Rule 19b–4 thereunder,[2] notice is hereby given that on August 18, 2015, BATS Exchange, Inc. (the ''Exchange'' or ''BATS'') filed with the Securities and Exchange Commission (''Commission'') the proposed rule change as described in Items I and II below, which Items have been prepared by the Exchange. The Exchange has designated this proposal as a ''non-controversial'' proposed rule change pursuant to Section 19(b)(3)(A) of the Act[3] and Rule 19b–4(f)(6)(iii) thereunder,[4] which renders it effective upon filing with the Commission. The Commission is publishing this notice to solicit comments on the proposed rule change from interested persons.

I. Self-Regulatory Organization's Statement of the Terms of Substance of the Proposed Rule Change

The Exchange filed a proposal to amend Rule 11.26(a) regarding the public disclosure of the sources of data that the Exchange utilizes when performing: (i) Order handling; (ii) order routing; and (iii) related compliance processes to reflect reactivation of the National Stock Exchange, Inc. (''NSX'') on or about August 31, 2015.

The text of the proposed rule change is available at the Exchange's Web site at *www.batstrading.com,* at the principal office of the Exchange, and at the Commission's Public Reference Room.

II. Self-Regulatory Organization's Statement of the Purpose of, and Statutory Basis for, the Proposed Rule Change

In its filing with the Commission, the Exchange included statements concerning the purpose of and basis for the proposed rule change and discussed any comments it received on the proposed rule change. The text of these statements may be examined at the places specified in Item IV below. The

[1] 15 U.S.C. 78s(b)(1).

[2] 17 CFR 240.19b–4.

[3] 15 U.S.C. 78s(b)(3)(A).

[4] 17 CFR 240.19b–4(f)(6)(iii).

Exchange has prepared summaries, set forth in Sections A, B, and C below, of the most significant parts of such statements.

(A) Self-Regulatory Organization's Statement of the Purpose of, and Statutory Basis for, the Proposed Rule Change

1. Purpose

The Exchange proposes to update Rule 11.26(a) regarding the public disclosure of the sources of data that the Exchange utilizes when performing: (i) Order handling; (ii) order routing; and (iii) related compliance processes to reflect reactivation of the NSX on or about August 31, 2015. The NSX informed the UTP Securities Information Processor (''UTP SIP'') that, subject to regulatory approval, it is projecting to reactivate its status as an operating participant for quotation and trading of Nasdaq-listed securities under the Unlisted Trading Privileges (''UTP'') Plan on or about August 31, 2015. Specifically, the Exchange proposes to amend Rule 11.26(a) to include the NSX by stating it will utilize NSX market data from the CQS/UQDF for purposes of order handling, routing, and related compliance processes.

2. Statutory Basis

The Exchange believes that the proposed rule change is consistent with Section 6(b) of the Act,[5] in general, and furthers the objectives of Section 6(b)(5) of the Act,[6] in particular, in that it is designed to prevent fraudulent and manipulative acts and practices, to promote just and equitable principles of trade, to foster cooperation and coordination with persons engaged in regulating, clearing, settling, processing information with respect to, and facilitating transactions in securities, to remove impediments to and perfect the mechanism of a free and open market and a national market system, and, in general, to protect investors and the public interest.

The Exchange believes that its proposal to update Exchange Rule 11.26(a) to include NSX would ensure that rule correctly identifies and publicly states on a market-by-market basis all of the specific network processor and proprietary data feeds that the Exchange utilizes for the handling, routing, and execution of orders, and for performing the regulatory compliance checks related to each of those functions. The proposed rule change also removes impediments to and perfects the mechanism of a free and open market and protects investors and the public interest because it provides additional specificity, clarity and transparency.

(B) Self-Regulatory Organization's Statement on Burden on Competition

The Exchange believes its proposed rule change would not impose any burden on competition that is not necessary or appropriate in furtherance of the purposes of the Act. To the contrary, the Exchange believes the proposal would enhance competition because including all of the exchanges enhances transparency and enables investors to better assess the quality of the Exchange's execution and routing services.

(C) Self-Regulatory Organization's Statement on Comments on the Proposed Rule Change Received From Members, Participants or Others

The Exchange has not solicited, and does not intend to solicit, comments on this proposed rule change. The Exchange has not received any unsolicited written comments from Members or other interested parties.

III. Date of Effectiveness of the Proposed Rule Change and Timing for Commission Action

The Exchange has designated this rule filing as non-controversial under Section 19(b)(3)(A) of the Act[7] and paragraph (f)(6) of Rule 19b–4 thereunder.[8] The proposed rule change effects a change that (A) does not significantly affect the protection of investors or the public interest; (B) does not impose any significant burden on competition; and (C) by its terms, does not become operative for 30 days after the date of the filing, or such shorter time as the Commission may designate if consistent with the protection of investors and the public interest; provided that the self-regulatory organization has given the Commission written notice of its intent to file the proposed rule change, along with a brief description and text of the proposed rule change, at least five business days prior to the date of filing of the proposed rule change, or such shorter time as designated by the Commission.[9]

A proposed rule change filed under Rule 19b–4(f)(6)[10] normally does not become operative prior to 30 days after the date of the filing. However, pursuant to Rule 19b4(f)(6)(iii),[11] the Commission may designate a shorter time if such action is consistent with the protection of investors and the public interest. The Exchange has asked the Commission to waive the 30-day operative delay so that the proposal may become operative immediately upon filing. The Exchange believes that waiver of the 30-day operative delay would benefit investors because it would enable the Exchange to immediately enhance transparency and to accommodate the reactivation of the NSX on or about August 31, 2015 as an operating participant for quotation and trading of Nasdaq-listed securities under the UTP Plan. The Commission believes that waiving the 30-day operative delay is consistent with the protection of investors and the public interest because it will enable the Exchange's rules to accommodate the reactivation of the NSX and to identify, without delay, all of the specific network processor and proprietary data feeds that the Exchange utilizes for the handling, routing, and execution of orders, and for performing the regulatory compliance checks related to each of those functions. Therefore, the Commission hereby waives the 30-day operative delay and designates the proposed rule change to be operative upon filing with the Commission.[12]

At any time within 60 days of the filing of the proposed rule change, the Commission may summarily temporarily suspend such rule change if it appears to the Commission that such action is: (1) Necessary or appropriate in the public interest; (2) for the protection of investors; or (3) otherwise in furtherance of the purposes of the Act. If the Commission takes such action, the Commission shall institute proceedings to determine whether the proposed rule should be approved or disapproved.

IV. Solicitation of Comments

Interested persons are invited to submit written data, views and arguments concerning the foregoing, including whether the proposal is consistent with the Act. Comments may be submitted by any of the following methods:

Electronic Comments

- Use the Commission's Internet comment form (*http://www.sec.gov/rules/sro.shtml*); or
- Send an email to *rule-comments@sec.gov.* Please include File No. SR–BATS–2015–65 on the subject line.

[5] 15 U.S.C. 78f.

[6] 15 U.S.C. 78f(b)(5).

[7] 15 U.S.C. 78s(b)(3)(A).

[8] 17 CFR 240.19b–4.

[9] The Exchange has fulfilled this requirement.

[10] 17 CFR 240.19b–4(f)(6).

[11] 17 CFR 240.19b–4(f)(6)(iii).

[12] For purposes only of waiving the operative date of this proposal, the Commission has considered the proposed rule's impact on efficiency, competition, and capital formation. 15 U.S.C. 78c(f).

Paper Comments

• Send paper comments in triplicate to Secretary, Securities and Exchange Commission, 100 F Street NE., Washington, DC 20549–1090.

All submissions should refer to File No. SR–BATS–2015–65. This file number should be included on the subject line if email is used. To help the Commission process and review your comments more efficiently, please use only one method. The Commission will post all comments on the Commission's Internet Web site (*http://www.sec.gov/rules/sro.shtml*). Copies of the submission, all subsequent amendments, all written statements with respect to the proposed rule change that are filed with the Commission, and all written communications relating to the proposed rule change between the Commission and any person, other than those that may be withheld from the public in accordance with the provisions of 5 U.S.C. 552, will be available for Web site viewing and printing in the Commission's Public Reference Room, 100 F Street NE., Washington, DC 20549, on official business days between the hours of 10:00 a.m. and 3:00 p.m. Copies of such filing will also be available for inspection and copying at the principal office of the Exchange. All comments received will be posted without change; the Commission does not edit personal identifying information from submissions. You should submit only information that you wish to make available publicly. All submissions should refer to File No. SR–BATS–2015–65 and should be submitted on or before September 23, 2015.

For the Commission, by the Division of Trading and Markets, pursuant to delegated authority.[13]

Robert W. Errett,

Deputy Secretary.

[FR Doc. 2015–21669 Filed 9–1–15; 8:45 am]

BILLING CODE 8011–01–P

[13] 17 CFR 200.30–3(a)(12).

SECURITIES AND EXCHANGE COMMISSION

[Release No. 34–75771; File No. SR–EDGA–2015–35]

Self-Regulatory Organizations; EDGA Exchange, Inc.; Notice of Filing and Immediate Effectiveness of a Proposed Rule Change To Amend Rule 13.4 Relating to the Reactivation of NSX

August 27, 2015.

Pursuant to Section 19(b)(1) of the Securities Exchange Act of 1934 (the ''Act''),[1] and Rule 19b–4 thereunder,[2] notice is hereby given that on August 18, 2015, EDGA Exchange, Inc. (the ''Exchange'' or ''EDGA'') filed with the Securities and Exchange Commission (''Commission'') the proposed rule change as described in Items I and II below, which Items have been prepared by the Exchange. The Exchange has designated this proposal as a ''non-controversial'' proposed rule change pursuant to Section 19(b)(3)(A) of the Act[3] and Rule 19b–4(f)(6)(iii) thereunder,[4] which renders it effective upon filing with the Commission. The Commission is publishing this notice to solicit comments on the proposed rule change from interested persons.

I. Self-Regulatory Organization's Statement of the Terms of Substance of the Proposed Rule Change

The Exchange filed a proposal to amend Rule 13.4(a) regarding the public disclosure of the sources of data that the Exchange utilizes when performing: (i) Order handling; (ii) order routing; and (iii) related compliance processes to reflect reactivation of the National Stock Exchange, Inc. (''NSX'') on or about August 31, 2015.

The text of the proposed rule change is available at the Exchange's Web site at *www.batstrading.com*, at the principal office of the Exchange, and at the Commission's Public Reference Room.

II. Self-Regulatory Organization's Statement of the Purpose of, and Statutory Basis for, the Proposed Rule Change

In its filing with the Commission, the Exchange included statements concerning the purpose of and basis for the proposed rule change and discussed any comments it received on the proposed rule change. The text of these statements may be examined at the places specified in Item IV below. The Exchange has prepared summaries, set forth in Sections A, B, and C below, of the most significant parts of such statements.

(A) Self-Regulatory Organization's Statement of the Purpose of, and Statutory Basis for, the Proposed Rule Change

1. Purpose

The Exchange proposes to update Rule 13.4(a) regarding the public disclosure of the sources of data that the Exchange utilizes when performing: (i) Order handling; (ii) order routing; and (iii) related compliance processes to reflect reactivation of the NSX on or about August 31, 2015. The NSX informed the UTP Securities Information Processor (''UTP SIP'') that, subject to regulatory approval, it is projecting to reactivate its status as an operating participant for quotation and trading of Nasdaq-listed securities under the Unlisted Trading Privileges (''UTP'') Plan on or about August 31, 2015. Specifically, the Exchange proposes to amend Rule 13.4(a) to include the NSX by stating it will utilize NSX market data from the CQS/UQDF for purposes of order handling, routing, and related compliance processes.

2. Statutory Basis

The Exchange believes that the proposed rule change is consistent with Section 6(b) of the Act,[5] in general, and furthers the objectives of Section 6(b)(5) of the Act,[6] in particular, in that it is designed to prevent fraudulent and manipulative acts and practices, to promote just and equitable principles of trade, to foster cooperation and coordination with persons engaged in regulating, clearing, settling, processing information with respect to, and facilitating transactions in securities, to remove impediments to and perfect the mechanism of a free and open market and a national market system, and, in general, to protect investors and the public interest.

The Exchange believes that its proposal to update Exchange Rule 13.4(a) to include NSX would ensure that rule correctly identifies and publicly states on a market-by-market basis all of the specific network processor and proprietary data feeds that the Exchange utilizes for the handling, routing, and execution of orders, and for performing the regulatory compliance checks related to each of those functions. The proposed rule change also removes impediments to and perfects the mechanism of a free

[1] 15 U.S.C. 78s(b)(1).

[2] 17 CFR 240.19b–4.

[3] 15 U.S.C. 78s(b)(3)(A).

[4] 17 CFR 240.19b–4(f)(6)(iii).

[5] 15 U.S.C. 78f.

[6] 15 U.S.C. 78f(b)(5).

and open market and protects investors and the public interest because it provides additional specificity, clarity and transparency.

(B) Self-Regulatory Organization's Statement on Burden on Competition

The Exchange believes its proposed rule change would not impose any burden on competition that is not necessary or appropriate in furtherance of the purposes of the Act. To the contrary, the Exchange believes the proposal would enhance competition because including all of the exchanges enhances transparency and enables investors to better assess the quality of the Exchange's execution and routing services.

(C) Self-Regulatory Organization's Statement on Comments on the Proposed Rule Change Received From Members, Participants or Others

The Exchange has not solicited, and does not intend to solicit, comments on this proposed rule change. The Exchange has not received any unsolicited written comments from Members or other interested parties.

III. Date of Effectiveness of the Proposed Rule Change and Timing for Commission Action

The Exchange has designated this rule filing as non-controversial under Section 19(b)(3)(A) of the Act [7] and paragraph (f)(6) of Rule 19b–4 thereunder.[8] The proposed rule change effects a change that (A) does not significantly affect the protection of investors or the public interest; (B) does not impose any significant burden on competition; and (C) by its terms, does not become operative for 30 days after the date of the filing, or such shorter time as the Commission may designate if consistent with the protection of investors and the public interest; provided that the self-regulatory organization has given the Commission written notice of its intent to file the proposed rule change, along with a brief description and text of the proposed rule change, at least five business days prior to the date of filing of the proposed rule change, or such shorter time as designated by the Commission.[9]

A proposed rule change filed under Rule 19b–4(f)(6) [10] normally does not become operative prior to 30 days after the date of the filing. However, pursuant to Rule 19b4(f)(6)(iii),[11] the Commission may designate a shorter time if such action is consistent with the protection of investors and the public interest. The Exchange has asked the Commission to waive the 30-day operative delay so that the proposal may become operative immediately upon filing. The Exchange believes that waiver of the 30-day operative delay would benefit investors because it would enable the Exchange to immediately enhance transparency and to accommodate the reactivation of the NSX on or about August 31, 2015 as an operating participant for quotation and trading of Nasdaq-listed securities under the UTP Plan. The Commission believes that waiving the 30-day operative delay is consistent with the protection of investors and the public interest because it will enable the Exchange's rules to accommodate the reactivation of the NSX and to identify, without delay, all of the specific network processor and proprietary data feeds that the Exchange utilizes for the handling, routing, and execution of orders, and for performing the regulatory compliance checks related to each of those functions. Therefore, the Commission hereby waives the 30-day operative delay and designates the proposed rule change to be operative upon filing with the Commission.[12]

At any time within 60 days of the filing of the proposed rule change, the Commission may summarily temporarily suspend such rule change if it appears to the Commission that such action is: (1) Necessary or appropriate in the public interest; (2) for the protection of investors; or (3) otherwise in furtherance of the purposes of the Act. If the Commission takes such action, the Commission shall institute proceedings to determine whether the proposed rule should be approved or disapproved.

IV. Solicitation of Comments

Interested persons are invited to submit written data, views and arguments concerning the foregoing, including whether the proposal is consistent with the Act. Comments may be submitted by any of the following methods:

Electronic Comments

- Use the Commission's Internet comment form (*http://www.sec.gov/rules/sro.shtml*); or
- Send an email to *rule-comments@sec.gov.* Please include File No. SR–EDGA–2015–35 on the subject line.

Paper Comments

- Send paper comments in triplicate to Secretary, Securities and Exchange Commission, 100 F Street NE., Washington, DC 20549–1090.

All submissions should refer to File No. SR–EDGA–2015–35. This file number should be included on the subject line if email is used. To help the Commission process and review your comments more efficiently, please use only one method. The Commission will post all comments on the Commission's Internet Web site (*http://www.sec.gov/rules/sro.shtml*). Copies of the submission, all subsequent amendments, all written statements with respect to the proposed rule change that are filed with the Commission, and all written communications relating to the proposed rule change between the Commission and any person, other than those that may be withheld from the public in accordance with the provisions of 5 U.S.C. 552, will be available for Web site viewing and printing in the Commission's Public Reference Room, 100 F Street NE., Washington, DC 20549, on official business days between the hours of 10:00 a.m. and 3:00 p.m. Copies of such filing will also be available for inspection and copying at the principal office of the Exchange. All comments received will be posted without change; the Commission does not edit personal identifying information from submissions. You should submit only information that you wish to make available publicly. All submissions should refer to File No. SR–EDGA–2015–35 and should be submitted on or before September 23, 2015.

For the Commission, by the Division of Trading and Markets, pursuant to delegated authority.[13]

Robert W. Errett,

Deputy Secretary.

[FR Doc. 2015–21667 Filed 9–1–15; 8:45 am]

BILLING CODE 8011–01–P

[7] 15 U.S.C. 78s(b)(3)(A).

[8] 17 CFR 240.19b–4.

[9] The Exchange has fulfilled this requirement.

[10] 17 CFR 240.19b–4(f)(6).

[11] 17 CFR 240.19b–4(f)(6)(iii).

[12] For purposes only of waiving the operative date of this proposal, the Commission has considered the proposed rule's impact on efficiency, competition, and capital formation. 15 U.S.C. 78c(f).

[13] 17 CFR 200.30–3(a)(12).

SECURITIES AND EXCHANGE COMMISSION

[Release No. 34–75773; File No. SR–Phlx–2015–73]

Self-Regulatory Organizations; NASDAQ OMX PHLX LLC; Notice of Filing and Immediate Effectiveness of Proposed Rule Change to Manipulative Operations

August 27, 2015.

Pursuant to Section 19(b)(1) of the Securities Exchange Act of 1934 (''Act''),[1] and Rule 19b–4 thereunder,[2] notice is hereby given that on August 19, 2015, NASDAQ OMX PHLX LLC (''Phlx'' or ''Exchange'') filed with the Securities and Exchange Commission (''SEC'' or ''Commission'') the proposed rule change as described in Items I and II below, which Items have been prepared by the Exchange. The Commission is publishing this notice to solicit comments on the proposed rule change from interested persons.

I. Self-Regulatory Organization's Statement of the Terms of Substance of the Proposed Rule Change

The Exchange proposes to amend Rules 782, entitled ''Manipulative Operations'' to enumerate manipulative trading practices which are already prohibited, but not specified.

The text of the proposed rule change is available on the Exchange's Web site at *http://nasdaqomxphlx.cchwallstreet.com/*, at the principal office of the Exchange, and at the Commission's Public Reference Room.

II. Self-Regulatory Organization's Statement of the Purpose of, and Statutory Basis for, the Proposed Rule Change

In its filing with the Commission, the Exchange included statements concerning the purpose of and basis for the proposed rule change and discussed any comments it received on the proposed rule change. The text of these statements may be examined at the places specified in Item IV below. The Exchange has prepared summaries, set forth in sections A, B, and C below, of the most significant aspects of such statements.

[1] 15 U.S.C. 78s(b)(1).

[2] 17 CFR 240.19b–4.

A. Self-Regulatory Organization's Statement of the Purpose of, and Statutory Basis for, the Proposed Rule Change

1. Purpose

The purpose of this proposed rule change is to amend Rule 782, entitled ''Manipulative Operations'' to specify other manipulative trading practices which are currently prohibited. Today the manipulative trade practices specified in the amended rule text are prohibited from being transacted on the Exchange pursuant to both federal laws [3] and Exchange Rules.[4] The enumerated manipulative practices in Rule 782, including the amended rule text, is not an exhaustive list, rather, these activities serve as guidance to certain trading practices that are prohibited on Phlx.

The Exchange proposes to adopt the rule text currently in The NASDAQ Stock Market LLC (''Nasdaq'') Rule 3351, entitled ''Trading Practices'' to provide market participants with additional guidance related to prohibited trading practices.[5] The proposed rule text would enumerate certain manipulative trading practices, which are currently prohibited. Phlx Rule 782 applies to both equities and options transactions.

The new rule text would enumerate prohibitions such that no member or member organization shall be permitted to execute or cause to be executed or participate in an account for which there are executed purchases of any listed security, at successively higher prices, or sales of any such security at successively lower prices, for the purpose of creating or inducing a false, misleading or artificial appearance of activity in such security or for the purpose of unduly or improperly influencing the market price for such security or for the purpose of establishing a price which does not reflect the true state of the market in such security.

No member or member organization would be permitted to create or induce a false or misleading appearance of activity in a listed security or create or induce a false or misleading appearance with respect to the market in such security for these types of activities in the amended rule text: (1) Execute any transaction in such security which involves no change in the beneficial ownership thereof; or (2) enter any order or orders for the purchase of such security with the knowledge that an order or orders of substantially the same size, and at substantially the same price, for the sale of any such security, has been or will be entered by or for the same or different parties; or (3) enter any order or orders for the sale of any such security with the knowledge that an order or orders of substantially the same size, and at substantially the same price, for the purchase of such security, has been or will be entered by or for the same or different parties.

The new rule text would specify that no member or member organization would be permitted to execute purchases or sales of a listed security for any account in which such member or member organization is directly or indirectly interested, which purchases or sales are excessive in view of the member's or member organization's financial resources or in view of the market for such security.

The rule text enumerates a prohibition for members and member organizations from participating directly or indirectly, in the profits of a manipulative operation or knowingly managing or financing a manipulative operation. This would include: (1) Any pool, syndicate or joint account organized or used intentionally for the purpose of unfairly influencing the market price of a listed security; (2) the solicitation of subscriptions to or the acceptance of discretionary orders from any such pool, syndicate or joint account; or (3) the carrying on margin of a position in such securities or the advancing of credit through loans to any such pool, syndicate or joint account.

The rule text specifies that no member or member organization shall make any statement or circulate and disseminate any information concerning a listed security which such member knows or has reasonable grounds for believing is false or misleading or would improperly influence the market price of such security.

No member, member organization or person associated with a member or member organization shall, directly or indirectly, hold any interest or participation in any joint account for buying or selling a listed security, unless such joint account is promptly reported to Phlx. The report should contain the following information for each account: (1) Name of the account, with names of all participants and their respective interests in profits and losses; (2) a statement regarding the purpose of

[3] See 17 CFR 10b–5.

[4] Phlx Rule 782 currently states, ''[n]o member, member organization, partner or stockholder therein shall directly or indirectly participate in or have any interest in the profits of a manipulative operation or knowingly manage or finance a manipulative operation.'' Also, Phlx Rule 707 prohibits conduct inconsistent with just and equitable principles of trade and Rule 708 prohibits acts detrimental to the welfare of the Exchange.

[5] Nasdaq Rule 3351 is an equities rule.

the account; (3) name of the member carrying and clearing the account; and (4) a copy of any written agreement or instrument relating to the account.

The rule text states that no member or member organization shall offer that a transaction or transactions to buy or sell a listed security will influence the closing transaction on the Consolidated Tape or The Options Price Reporting Authority (''OPRA''). A member or member organization may, but is not obligated to, accept a stop order in a listed security. A buy stop order is an order to buy which becomes a market order when a transaction takes place at or above the stop price. A sell stop order is an order to sell which becomes a market order when a transaction takes place at or below the stop price. A member or member organization may, but is not obligated to, accept stop limit orders in listed securities. When a transaction occurs at the stop price, the stop limit order to buy or sell becomes a limit order at the limit price.

No member, member organization or person associated with a member or member organization shall execute or cause to be executed, directly or indirectly, on a Phlx transaction in a security subject to an initial public offering until such security has first opened for trading on the national securities exchange listing the security, as indicated by the dissemination of an opening transaction in the security by the listing exchange via the Consolidated Tape or OPRA.

The Exchange believes that the addition of this rule text will bolster the current rule and provide members and member organizations with guidance on the type of manipulative practices that are specifically prohibited on Phlx. Also, the Exchange believes that the addition of the rule text will serve to also conform the Exchange's rule to that of Nasdaq.

2. Statutory Basis

The Exchange believes that its proposal is consistent with Section 6(b) of the Act [6] in general, and furthers the objectives of Section 6(b)(5) of the Act [7] in particular, in that it is designed to prevent fraudulent and manipulative acts and practices, to promote just and equitable principles of trade, to foster cooperation and coordination with persons engaged in facilitating transactions in securities, to remove impediments to and perfect the mechanism of a free and open market and a national market system and, in general, to protect investors and the public interest. The Exchange believes that the proposed rule text will prevent fraudulent and manipulative acts and practices, promote just and equitable principles of trade, and better protect investors and the public interest.

The Exchange believes is the proposed rule change is consistent with principles of just and equitable principles of trade while also ensuring that members and member organizations may continue to engage in transactions that do not present the risk of abusive trading practices that the rule is intended to prevent. The Exchange believes that proposed rule text would enhance the protection of orders of market participants by specifically addressing various types of currently prohibited abusive trading that may be intended to take advantage of such orders. Specifically, the proposed rule change seeks to provide greater guidance by enumerating certain manipulative trading practices that are currently prohibited.

As previously noted, the proposed rule text is similar to Nasdaq Rule 3351. While Nasdaq Rule 3351 applies to equity transactions, Phlx proposes to apply the amended rule text to both equity and options transactions, as is the case today with Rule 782 today. The Exchange believes that specifying the type of manipulative conduct that is already prohibited and described in Rule 782, including the amended rule text, on both the equities and options market will prevent fraudulent and manipulative acts and practices, promote just and equitable principles of trade and better protect investors and the public interest. The Exchange proposes to prohibit this type of behavior on the Exchange as a whole. The Exchange believes specifying the practices that are currently prohibited on both the equities and options markets promotes just and equitable principles of trade.

B. Self-Regulatory Organization's Statement on Burden on Competition

The proposed rule change does not impose any burden on competition that is not necessary or appropriate in furtherance of the purposes of the Act. The proposed rule change is not designed to address any competitive issues, rather it is designed to enable the Exchange to protect orders of market participants from abusive and manipulative conduct on both the equities and options markets, by offering additional guidance, while also harmonizing the rule to that of Nasdaq. The Exchange's proposed amendments seek to harmonize the Rulebook with that of Nasdaq.

C. Self-Regulatory Organization's Statement on Comments on the Proposed Rule Change Received From Members, Participants, or Others

No written comments were either solicited or received.

III. Date of Effectiveness of the Proposed Rule Change and Timing for Commission Action

The Exchange has filed the proposed rule change pursuant to Section 19(b)(3)(A)(iii) of the Act [8] and Rule 19b–4(f)(6) thereunder.[9] Because the proposed rule change does not: (i) Significantly affect the protection of investors or the public interest; (ii) impose any significant burden on competition; and (iii) become operative for 30 days from the date on which it was filed, or such shorter time as the Commission may designate, if consistent with the protection of investors and the public interest, the proposed rule change has become effective pursuant to Section 19(b)(3)(A) of the Act [10] and Rule 19b–4(f)(6) thereunder.[11]

A proposed rule change filed under Rule 19b–4(f)(6) [12] normally does not become operative prior to 30 days after the date of the filing. However, pursuant to Rule 19b–4(f)(6)(iii),[13] the Commission may designate a shorter time if such action is consistent with the protection of investors and the public interest. The Exchange has asked the Commission to waive the 30-day operative delay so that the proposed rule change may become operative immediately.

The Exchange believes that the proposal would benefit investors and market participants by specifically enumerating certain abusive and manipulative trading practices, which the Exchange notes are currently prohibited. The Exchange further states that amending Phlx Rule 782 to provide market participants with additional guidance regarding such activity would ''benefit the protection of investors and the public interest.'' Based on the foregoing, the Commission finds that waiving the 30-day operative delay is consistent with the protection of

[6] 15 U.S.C. 78f(b).

[7] 15 U.S.C. 78f(b)(5).

[8] 15 U.S.C. 78s(b)(3)(A)(iii).

[9] 17 CFR 240.19b–4(f)(6).

[10] 15 U.S.C. 78s(b)(3)(A).

[11] 17 CFR 240.19b–4(f)(6). In addition, Rule 19b–4(f)(6)(iii) requires the Exchange to give the Commission written notice of the Exchange's intent to file the proposed rule change, along with a brief description and text of the proposed rule change, at least five business days prior to the date of filing of the proposed rule change, or such shorter time as designated by the Commission. The Exchange has satisfied this requirement.

[12] 17 CFR 240.19b–4(f)(6).

[13] 17 CFR 240.19b–4(f)(6)(iii).

investors and the public interest and hereby designates the proposal operative upon filing.[14]

At any time within 60 days of the filing of the proposed rule change, the Commission summarily may temporarily suspend such rule change if it appears to the Commission that such action is necessary or appropriate in the public interest, for the protection of investors, or otherwise in furtherance of the purposes of the Act. If the Commission takes such action, the Commission shall institute proceedings to determine whether the proposed rule change should be approved or disapproved.

IV. Solicitation of Comments

Interested persons are invited to submit written data, views, and arguments concerning the foregoing, including whether the proposed rule change is consistent with the Act. Comments may be submitted by any of the following methods:

Electronic Comments

- Use the Commission's Internet comment form (*http://www.sec.gov/rules/sro.shtml*); or
- Send an email to *rule-comments@sec.gov.* Please include File Number SR–Phlx–2015–73 on the subject line.

Paper Comments

- Send paper comments in triplicate to Secretary, Securities and Exchange Commission, 100 F Street NE., Washington, DC 20549–1090.

All submissions should refer to File Number SR–Phlx–2015–73. This file number should be included on the subject line if email is used. To help the Commission process and review your comments more efficiently, please use only one method. The Commission will post all comments on the Commission's Internet Web site (*http://www.sec.gov/rules/sro.shtml*). Copies of the submission, all subsequent amendments, all written statements with respect to the proposed rule change that are filed with the Commission, and all written communications relating to the proposed rule change between the Commission and any person, other than those that may be withheld from the public in accordance with the provisions of 5 U.S.C. 552, will be available for Web site viewing and printing in the Commission's Public Reference Room, 100 F Street NE., Washington, DC 20549 on official business days between the hours of 10:00 a.m. and 3:00 p.m. Copies of such filing also will be available for inspection and copying at the principal offices of the Exchange. All comments received will be posted without change; the Commission does not edit personal identifying information from submissions. You should submit only information that you wish to make available publicly. All submissions should refer to File Number SR–Phlx–2015–73, and should be submitted on or before September 23, 2015.

For the Commission, by the Division of Trading and Markets, pursuant to delegated authority.[15]

Robert W. Errett,

Deputy Secretary.

[FR Doc. 2015–21665 Filed 9–1–15; 8:45 am]

BILLING CODE 8011–01–P

[14] For purposes only of waiving the 30-day operative delay, the Commission has considered the proposed rule's impact on efficiency, competition, and capital formation. *See* 15 U.S.C. 78c(f).

[15] 17 CFR 200.30–3(a)(12), (59).

SECURITIES AND EXCHANGE COMMISSION

[Release No. 34–75766; File No. SR–BOX–2015–22]

Self-Regulatory Organizations; BOX Options Exchange LLC; Order Granting Approval of a Proposed Rule Change To Implement the Governance Provisions of an Equity Rights Program

August 27, 2015.

I. Introduction

On June 25, 2015, BOX Options Exchange LLC (the ''Exchange'') filed with the Securities and Exchange Commission (''Commission''), pursuant to section 19(b)(1) of the Securities Exchange Act of 1934 (''Act''),[1] and Rule 19b–4 thereunder,[2] a proposed rule change to implement the governance provisions of a volume performance rights program (the ''VPR Program''). The proposed rule change was published for comment in the **Federal Register** on July 13, 2015.[3] The Commission received no comments on the proposal. This order approves the proposed rule change.

[1] 15 U.S.C. 78s(b)(1).

[2] 17 CFR 240.19b–4.

[3] *See* Securities Exchange Act Release No. 75374 (July 7, 2015), 80 FR 40100 (SR–BOX–2015–22) (''Notice'').

II. Description

Under the VPR Program, BOX[4] Options Participants[5] (''Participants'') that take part in the Program will have the right to acquire equity in, and receive distributions from, BOX Holdings Group LLC (''Holdings''), an affiliate of the Exchange and direct parent entity of BOX, in exchange for a nominal cash payment and the achievement of certain order flow volume commitments over a period of five years.[6] Pursuant to the VPR Program, Volume Performance Rights (''VPRs'') were issued to Participants that elected to participate, met the eligibility criteria and made the initial cash payment (''Subscribers'').[7]

Each VPR is comprised of the right to receive 8.5 unvested new Class C Membership Units of Holdings (''Class C Units''), upon effectiveness of this proposed rule change. One VPR per Tranche will be eligible to vest each quarter of the five (5) year Program period, subject to the Subscriber meeting its volume commitment for that quarter. In addition, VPRs may be reallocated among Subscribers based upon exceeding or failing to meet Subscribers' volume commitments during the VPR Program period.[8]

A. Ownership Units

As described in more detail in the Notice,[9] in order to implement certain aspects of the VPR Program, Holdings would amend its existing Limited Liability Company Agreement (the ''Holdings LLC Agreement'') by adopting an Amended and Restated Limited Liability Company Agreement of Holdings (the ''Restated Holdings LLC Agreement''), to create Class C

[4] ''BOX'' means BOX Market LLC, an options trading facility of the Exchange. *See* BOX Rule 100(a)(7).

[5] ''Options Participant'' or ''Participant'' means a firm, or organization that is registered with the Exchange pursuant to the Rule 2000 Series for purposes of participating in options trading on BOX as an ''Order Flow Provider'' or ''Market Maker.'' *See* BOX Rule 100(a)(40).

[6] *See* Securities Exchange Act Release No. 74114 (January 22, 2015), 80 FR 4611 (January 28, 2015) (SR–BOX–2015–03) (the ''VPR Filing''). *See also* Securities Exchange Act Release No. 74171 (January 29, 2015), 80 FR 6153 (February 4, 2015) (SR–BOX–2015–05) (extending the deadline to participate in the VPR program until January 14, 2015) (the ''Second VPR Filing'').

[7] *See* Notice, *supra* note 3, at 40101. The VPRs were issued in tranches of twenty (20) VPRs (each, a ''Tranche'') with a minimum subscription of two (2) Tranches per Subscriber. According to the Exchange, twenty-seven (27) Tranches have been issued in connection with the VPR Program. *See id.*

[8] *See* Notice, *supra* note 3, at 40101.

[9] *See id.*

Units.[10] Once Class C Units are created, Holdings will admit the Subscribers as Class C Members.[11]

The existing limitations on the percentage ownership of Holdings by Participants will continue to apply. Specifically, in the event that a Member, or any Related Person [12] of a Member, is a Participant, and the Member owns more than 20% of the Units,[13] alone or together with any Related Person of the Member (Units owned in excess of 20% being referred to as ''Excess Units''), the Member and its designated Directors [14] will have no voting rights with respect to the Excess Units on any action relating to Holdings nor will the Member or its designated Directors, if any, be entitled to give any proxy with respect to the Excess Units in relation to a vote of the Members; provided, however, that whether or not the Member or its designated Directors, if any, otherwise participates in a meeting in person or by proxy, the Member's Excess Units will be counted for quorum purposes and will be voted by the person presiding over quorum and vote matters in the same proportion as the Units held by the other Members are voted (including any abstentions from voting).[15]

Upon completion of the VPR Program, all outstanding Class C Units associated with vested VPRs will be automatically converted into an equal number of Class A Units and all outstanding Class C Units associated with unvested VPRs will be automatically cancelled and be of no further effect. All rights related to Class C Units will terminate automatically upon cancellation or conversion and rights related to the converted Class A Units will remain, subject to the terms of the Restated Holdings LLC Agreement.[16]

B. Voting

Each Class C Member will have the right to vote its Class C Units that are associated with vested VPRs (''Voting Class C Units'') on matters submitted to a vote of all holders of Units. VPRs will vest in accordance with the vesting provisions of the VPR Program.[17] Members holding Voting Class C Units will vote with Members holding all other classes of Units. Members holding Voting Units [18] will be entitled to vote together, as a single class, each with one vote per Voting Unit so held.[19] Issued and outstanding Class C Units that are not Voting Class C Units will not have voting rights. According to the Exchange, as a Subscriber meets or exceeds its volume commitments, its voting powers as a Class C Member of Holdings will increase.[20] Similarly, if a Subscriber does not meet its volume commitment, its voting powers will decrease.[21]

The Holdings LLC Agreement currently provides, and the Restated Holdings LLC Agreement will continue to provide, that any Director designated by either MX US 2, Inc. or IB Exchange Corp may effectively block certain actions of Holdings (the ''Major Action Veto''). Under the Restated Holdings LLC Agreement, upon vesting of VPRs associated with Class C Units equal to at least 25% of the total outstanding Units, the Major Action Veto will automatically expire and be of no further effect. In addition, when the 25% threshold is met, the Restated Holdings LLC Agreement provides that Holdings and its Members will take all necessary action to amend the Limited Liability Company Agreement of BOX to eliminate the Major Action Veto provisions therein that are applicable to BOX and inure to the benefit of MX US 2, Inc. and IB Exchange Corp and to provide that the executive committee of BOX will be constituted in the same manner as the Executive Committee of Holdings.[22]

The Restated Holdings LLC Agreement includes a new supermajority voting requirement that Members holding at least 67% of all outstanding Voting Units must vote to approve certain actions (the ''Supermajority Actions'') by Holdings.[23] The supermajority voting requirement, however, would not apply to certain of these Supermajority Actions,[24] to the extent otherwise required by the Exchange to fulfill its regulatory functions or responsibilities or to oversee the BOX Market as determined by the board of the Exchange.

C. Directors

The Exchange proposes to amend the Holdings LLC Agreement with respect to the composition of the Holdings Board. Currently, MX US 2, Inc. has the right to designate up to five (5) Directors, IB Exchange Corp has the right to designate up to two (2) Directors and each other Member has the right to designate one (1) Director to the Holdings Board and the Holdings Board has the power to increase the size of the Holdings Board and to authorize new Members to designate Directors.[25]

Under the Restated Holdings LLC Agreement, no Member may designate more than three (3) Directors and each Member may designate the maximum number of Directors permitted under any one (1) (but not more than one) of the following criteria: (i) Each Member, so long as it (together with its respective Affiliates) holds a combined total of Class A Units and Class B Units greater than two and one-half percent (2.5%) of all outstanding Voting Units, will be entitled to designate one (1) Director, (ii) each Member, so long as it (together with its respective Affiliates) holds a combined total of Voting Class C Units greater than four percent (4%) of all outstanding Voting Units, will be entitled to designate one (1) Director, (iii) each Member, so long as it (together with its respective Affiliates) holds a combined total of Voting Units greater than fourteen percent (14%) of all outstanding Voting Units, will be entitled to designate two (2) Directors, (iv) each Member, so long as it (together with its respective Affiliates) holds a combined total of Voting Units greater than twenty-eight percent (28%) of all

[10] *See* Notice, *supra* note 3 at, 40100. Currently, Holdings only has issued and outstanding Class A and Class B membership Units. *See id.* at 40101.

[11] *See id.*

[12] The Exchange is not proposing to change the definition of ''Related Person.'' *See* Notice, *supra* note 3, at 40101, n.9.

[13] ''Units'' means Class A Membership Units, Class B Membership Units and Class C Units of Holdings. *See* proposed Restated Holdings LLC Agreement Section 1.1 (defining ''Units'').

[14] *See* proposed Restated Holdings LLC Agreement Section 4.1(a) (defining ''Directors'').

[15] *See* proposed Restated Holdings LLC Agreement Section 7.4(h).

[16] *See* proposed Restated Holdings LLC Agreement Section 2.5(e).

[17] *See* Notice, *supra* note 3. *See also* VPR Filing, *supra* note 6.

[18] ''Voting Unit'' means any Class A Unit, Class B Unit, or Voting Class C Unit. *See* proposed Restated Holdings LLC Agreement, Section 1.1.

[19] *See* proposed Restated Holdings LLC Agreement Section 4.13(a).

[20] *See* Notice, *supra* note 3, at 40102.

[21] *See id.*

[22] *See* proposed Restated Holdings LLC Agreement Section 16.4.

[23] *See* proposed Restated Holdings LLC Agreement Section 4.13(b). For further details on these actions, *see* Notice, *supra* note 3, at 40102–03.

[24] *See, e.g.,* proposed Restated Holdings LLC Agreement Section 4.13(b)(vi)–(viii), (x), (xii), and (xiii). These provisions are: (1) The issuance, by Holdings, of any additional equity interests in, or any securities exchangeable for or convertible into equity securities of, Holdings, subject to specified exceptions; (2) the issuance, by BOX, of any additional equity interests in, or any securities exchangeable for or convertible into equity securities of, BOX, except as otherwise provided in the Facility Agreement; (3) permitting BOX to operate the BOX Market utilizing any other regulatory services provider other than the Exchange; (4) making a fundamental change to the business model of BOX to be other than a for-profit business; (5) altering the provisions relating to the designation of Directors set forth in Restated Holdings LLC Agreement; and (6) altering or amending any of the Supermajority Actions provisions as set forth in the Restated Holdings LLC Agreement. *Id.*

[25] *See* Notice, *supra* 3, at 40103.

outstanding Voting Units, will be entitled to designate three (3) Directors, and (v) each other existing Member may designate one (1) Director.[26] Directors serving on the Holdings Board may also serve on the board of directors of any subsidiary of Holdings. If a Member ceases to qualify for the right to designate a Director then serving, then that Director will then automatically be removed from the Holdings Board.[27]

The Restated Holdings LLC Agreement also will amend the provisions governing the right of Members to designate members of the Executive Committee of Holdings (the ''Executive Committee''), if any.[28] Currently, MX US 2, Inc. has the right to designate up to two (2) members of the Executive Committee (''EC Members'') and IB Exchange Corp has the right to designate one (1) EC Member. Under the Restated Holdings LLC Agreement, any Member with the right to designate three (3) Directors to the Holdings Board will have the right to designate up to two (2) EC Members and any Member with the right to designate two (2) Directors to the Holdings Board will have the right to designate one (1) EC Member.[29]

Subscribers will also have the right to designate one individual to a new Advisory Committee organized by Holdings, the purpose of which will be to advise and make recommendations to Holdings with respect to the Exchange's competitiveness in the marketplace.[30] Only Subscribers will have the right to designate individuals to serve on the Advisory Committee.[31] The Advisory Committee will be advisory only and will not have any powers, votes or fiduciary duties to Holdings.[32]

D. Distributions

The Restated Holdings LLC Agreement provides that, once per year, Holdings will make a distribution (an ''Annual Distribution'') to its Members to the extent funds are available for distribution.[33] In determining the amount of each Annual Distribution, the Holdings Board will first provide for any regulatory needs of BOX and the Exchange, as determined by the Exchange Board, and any Annual Distribution amounts will be calculated after taking into account all financial and regulatory needs of the Exchange, as determined by the Exchange.[34] The Annual Distribution will be equal to 80% of Free Cash Flow,[35] except as limited by applicable law, including for regulatory and compliance purposes. In addition, another 15% of Free Cash Flow will be included in the distribution, except to the extent the Holdings Board determines that any portion thereof is (i) required for the operations of Holdings and its subsidiaries, which will be reflected on the annual budget for the next year, (ii) required for payment of liabilities or expenses of Holdings, or (iii) required as a reserve to make reasonable provision to pay other claims and obligations then known to, or reasonably anticipated by, BOX or Holdings. When, as and if declared by the Holdings Board, Holdings will make the cash distribution to each Member pro rata in accordance with the number of Units held by each Member, which will be determined by multiplying the aggregate Annual Distribution amount by each Member's Percentage Interest[36] on the record date. Distributions to Class C Members may be adjusted as provided in the Members Agreement.[37]

III. Discussion

The Commission has reviewed carefully the proposed rule change and finds that the proposed rule change is consistent with the requirements of the Act and the rules and regulations thereunder applicable to a national securities exchange.[38] In particular, the Commission finds that the proposed rule change is consistent with sections 6(b)(1) of the Act,[39] which, among other things, requires a national securities exchange to be so organized and have the capacity to be able to carry out the purposes of the Act, and to enforce compliance by its members and persons associated with its members with the provisions of the Act, the rules and regulations thereunder, and the rules of the exchange. The Commission also finds that the proposal is consistent with section 6(b)(5) of the Act,[40] which requires that the rules of the exchange be designed to promote just and equitable principles of trade, to remove impediments to and perfect the mechanism of a free and open market and a national market system, and, in general, to protect investors and the public interest.

Although Holdings does not carry out any regulatory functions, all of its activities must be consistent with the Act. Holdings is the sole owner of BOX, which owns and operates the BOX options trading platform as a facility of the Exchange. As a facility of a national securities exchange, the options trading platform is not solely a commercial enterprise, but is an integral part of an SRO that is registered pursuant to the Act and therefore subject to obligations imposed by the Act. The Commission believes that the Restated Holdings LLC Agreement is reasonably designed to enable Holdings to operate in a manner that is consistent with this principle. In this regard, the Commission believes that the proposed changes related to the VPR Program will not impact provisions of Holding's corporate governance documents that were designed to enable the Exchange and BOX to operate in a manner that complies with the federal securities laws, and were intended to assist the Exchange in fulfilling its self-regulatory obligations and administering and complying with the requirements of the Act.[41] The Commission also believes

[26] *See* proposed Restated Holdings LLC Agreement Section 4.1(a)(i)–(vi).

[27] *See* proposed Restated Holdings LLC Agreement section 4.1(b).

[28] *See* Notice, *supra* note 3, at 40103.

[29] *See* proposed Restated Holdings LLC Agreement section 4.2(c). Other provisions relating to the composition of the Executive Committee will be unchanged.

[30] *See* Notice, *supra* note 3, at 40103.

[31] *See* VPR Filing, *supra* note 6, at 4613.

[32] *See* Notice, *supra* note 3, at 40103.

[33] *See* proposed Restated Holdings LLC Agreement section 8.1. Distributions on Class C Units will not be paid until this proposed rule change is effective. Distributions payable on Class C Units that accrue before such effectiveness will be held in a segregated account until such effectiveness. If this rule filing does not become effective by July 1, 2016, a Subscriber may terminate its involvement in the VPR Program and any and all distributions with respect to Class C Units payable to that Subscriber held in the segregated account will be released back to Holdings and distributed to existing Members in accordance with the terms of the Holdings LLC Agreement. *See* Notice, *supra* note 3, at 40104, n.21. *See also* VPR Filing, *supra* note 6, at 4612, n.15.

[34] *See* proposed Restated Holdings LLC Agreement Section 8.1.

[35] ''Free Cash Flow'' means consolidated net income, plus depreciation, less capital expenditures (in each case calculated in accordance with generally accepted accounting principles in the United States, as in effect from time to time) of Holdings and BOX, for the calendar year. *See* proposed Restated Holdings LLC Agreement Section 1.1.

[36] ''Percentage Interest'' with respect to a Member means the ratio of the number of Units held by the Member to the total of all of the issued Units, expressed as a percentage and determined with respect to each class of Units, whenever applicable.

[37] *See* proposed Restated Holdings LLC Agreement Section 8.1 and *see* VPR Filing *supra,* note 6.

[38] In approving the proposed rule changes, the Commission has considered their impact on efficiency, competition and capital formation. *See* 15 U.S.C. 78c(f).

[39] 15 U.S.C. 78f(b)(1).

[40] 15 U.S.C. 78f(b)(5).

[41] *See* Securities Exchange Act Release No. 66871 (April 27, 2012), 77 FR 26323, 26329–30 (May 3, 2012) (describing provisions in governing documents designed to help maintain the independence of the regulatory functions of the Exchange, including, but not limited to, section 4.12(a) of the proposed Restated Holdings LLC Agreement, which provides that each of the Members, Directors, Officers, employees and agents of Holdings shall give due regard to the preservation of the independence of the self-regulatory function of the Exchange and to its

Continued

that the proposed rule change will allow the Commission to continue to exercise its plenary regulatory authority over the Exchange and continue to provide the Commission and the Exchange with access to necessary information that will allow the Exchange to comply, and enforce compliance, with the Act.

With respect to the Annual Distributions, the Commission notes the Exchange represents that before making any distribution to its Members, the Holdings Board will first provide for any regulatory needs of BOX and the Exchange (as determined by the Exchange Board).[42] The Commission believes that the requirement to first provide for the regulatory needs of BOX and the Exchange is designed to facilitate the ability of the Exchange to fulfill its regulatory obligations under the Act and help to ensure that the proposed provisions regarding distributions maintain the independence of the Exchange's regulatory function and would not be made in violation of the Exchange's legal and regulatory responsibilities. The Commission therefore believes that the proposed provisions in the Restated Holdings LLC Agreement related to distributions are consistent with the Act.

IV. Conclusion

For the foregoing reasons, the Commission finds that the proposed rule change is consistent with the Act and the rules and regulations thereunder applicable to a national securities exchange.

IT IS THEREFORE ORDERED, pursuant to section 19(b)(2) of the Act[43] that the proposed rule change (SR—BOX–2015–22) is approved.

For the Commission, by the Division of Trading and Markets, pursuant to delegated authority.[44]

Robert W. Errett,

Deputy Secretary.

[FR Doc. 2015–21672 Filed 9–1–15; 8:45 am]

BILLING CODE 8011–01–P

obligations to investors and the general public and shall not take actions which would interfere with the effectuation of decisions by the board of directors of the Exchange relating to its regulatory functions (including disciplinary matters) or which would interfere with the Exchange's ability to carry out its responsibilities under the Exchange Act, and section 4.12(b), which provides that Holdings and its Members shall comply with the federal securities laws and the rules and regulations thereunder and shall cooperate with the Commission and the Exchange pursuant to and to the extent of their respective regulatory authority).

[42] *See* Notice, *supra* note 3, at 40103 (''In determining the amount of each Annual Distribution, the Holdings Board will first provide for any regulatory needs of BOX and the Exchange, as determined by the Exchange Board, and any Annual Distribution amounts will be calculated after taking into account all financial and regulatory needs of the Exchange, as determined by the Exchange.'').

[43] 15 U.S.C. 78s(b)(2).

[44] 17 CFR 200.30–3(a)(12).

SECURITIES AND EXCHANGE COMMISSION

[Release No. 34–75770; File No. SR–BYX–2015–37]

Self-Regulatory Organizations; BATS Y-Exchange, Inc.; Notice of Filing and Immediate Effectiveness of a Proposed Rule Change To Amend Rule 11.26 Relating to the Reactivation of NSX

August 27, 2015.

Pursuant to Section 19(b)(1) of the Securities Exchange Act of 1934 (the ''Act''),[1] and Rule 19b–4 thereunder,[2] notice is hereby given that on August 18, 2015, BATS Y-Exchange, Inc. (the ''Exchange'' or ''BYX'') filed with the Securities and Exchange Commission (''Commission'') the proposed rule change as described in Items I and II below, which Items have been prepared by the Exchange. The Exchange has designated this proposal as a ''non-controversial'' proposed rule change pursuant to Section 19(b)(3)(A) of the Act[3] and Rule 19b–4(f)(6)(iii) thereunder,[4] which renders it effective upon filing with the Commission. The Commission is publishing this notice to solicit comments on the proposed rule change from interested persons.

I. Self-Regulatory Organization's Statement of the Terms of Substance of the Proposed Rule Change

The Exchange filed a proposal to amend Rule 11.26(a) regarding the public disclosure of the sources of data that the Exchange utilizes when performing: (i) Order handling; (ii) order routing; and (iii) related compliance processes to reflect reactivation of the National Stock Exchange, Inc. (''NSX'') on or about August 31, 2015.

The text of the proposed rule change is available at the Exchange's Web site at *www.batstrading.com,* at the principal office of the Exchange, and at the Commission's Public Reference Room.

II. Self-Regulatory Organization's Statement of the Purpose of, and Statutory Basis for, the Proposed Rule Change

In its filing with the Commission, the Exchange included statements concerning the purpose of and basis for the proposed rule change and discussed any comments it received on the proposed rule change. The text of these statements may be examined at the places specified in Item IV below. The Exchange has prepared summaries, set forth in Sections A, B, and C below, of the most significant parts of such statements.

(A) Self-Regulatory Organization's Statement of the Purpose of, and Statutory Basis for, the Proposed Rule Change

1. Purpose

The Exchange proposes to update Rule 11.26(a) regarding the public disclosure of the sources of data that the Exchange utilizes when performing: (i) Order handling; (ii) order routing; and (iii) related compliance processes to reflect reactivation of the NSX on or about August 31, 2015. The NSX informed the UTP Securities Information Processor (''UTP SIP'') that, subject to regulatory approval, it is projecting to reactivate its status as an operating participant for quotation and trading of Nasdaq-listed securities under the Unlisted Trading Privileges (''UTP'') Plan on or about August 31, 2015. Specifically, the Exchange proposes to amend Rule 11.26(a) to include the NSX by stating it will utilize NSX market data from the CQS/UQDF for purposes of order handling, routing, and related compliance processes.

2. Statutory Basis

The Exchange believes that the proposed rule change is consistent with Section 6(b) of the Act,[5] in general, and furthers the objectives of Section 6(b)(5) of the Act,[6] in particular, in that it is designed to prevent fraudulent and manipulative acts and practices, to promote just and equitable principles of trade, to foster cooperation and coordination with persons engaged in regulating, clearing, settling, processing information with respect to, and facilitating transactions in securities, to remove impediments to and perfect the mechanism of a free and open market and a national market system, and, in general, to protect investors and the public interest.

[1] 15 U.S.C. 78s(b)(1).

[2] 17 CFR 240.19b–4.

[3] 15 U.S.C. 78s(b)(3)(A).

[4] 17 CFR 240.19b–4(f)(6)(iii).

[5] 15 U.S.C. 78f.

[6] 15 U.S.C. 78f(b)(5).

The Exchange believes that its proposal to update Exchange Rule 11.26(a) to include NSX would ensure that rule correctly identifies and publicly states on a market-by-market basis all of the specific network processor and proprietary data feeds that the Exchange utilizes for the handling, routing, and execution of orders, and for performing the regulatory compliance checks related to each of those functions. The proposed rule change also removes impediments to and perfects the mechanism of a free and open market and protects investors and the public interest because it provides additional specificity, clarity and transparency.

(B) Self-Regulatory Organization's Statement on Burden on Competition

The Exchange believes its proposed rule change would not impose any burden on competition that is not necessary or appropriate in furtherance of the purposes of the Act. To the contrary, the Exchange believes the proposal would enhance competition because including all of the exchanges enhances transparency and enables investors to better assess the quality of the Exchange's execution and routing services.

(C) Self-Regulatory Organization's Statement on Comments on the Proposed Rule Change Received From Members, Participants or Others

The Exchange has not solicited, and does not intend to solicit, comments on this proposed rule change. The Exchange has not received any unsolicited written comments from Members or other interested parties.

III. Date of Effectiveness of the Proposed Rule Change and Timing for Commission Action

The Exchange has designated this rule filing as non-controversial under Section 19(b)(3)(A) of the Act [7] and paragraph (f)(6) of Rule 19b–4 thereunder.[8] The proposed rule change effects a change that (A) does not significantly affect the protection of investors or the public interest; (B) does not impose any significant burden on competition; and (C) by its terms, does not become operative for 30 days after the date of the filing, or such shorter time as the Commission may designate if consistent with the protection of investors and the public interest; provided that the self-regulatory organization has given the Commission written notice of its intent to file the proposed rule change, along with a brief description and text of the proposed rule change, at least five business days prior to the date of filing of the proposed rule change, or such shorter time as designated by the Commission.[9]

A proposed rule change filed under Rule 19b–4(f)(6) [10] normally does not become operative prior to 30 days after the date of the filing. However, pursuant to Rule 19b4(f)(6)(iii),[11] the Commission may designate a shorter time if such action is consistent with the protection of investors and the public interest. The Exchange has asked the Commission to waive the 30-day operative delay so that the proposal may become operative immediately upon filing. The Exchange believes that waiver of the 30-day operative delay would benefit investors because it would enable the Exchange to immediately enhance transparency and to accommodate the reactivation of the NSX on or about August 31, 2015 as an operating participant for quotation and trading of Nasdaq-listed securities under the UTP Plan. The Commission believes that waiving the 30-day operative delay is consistent with the protection of investors and the public interest because it will enable the Exchange's rules to accommodate the reactivation of the NSX and to identify, without delay, all of the specific network processor and proprietary data feeds that the Exchange utilizes for the handling, routing, and execution of orders, and for performing the regulatory compliance checks related to each of those functions. Therefore, the Commission hereby waives the 30-day operative delay and designates the proposed rule change to be operative upon filing with the Commission.[12]

At any time within 60 days of the filing of the proposed rule change, the Commission may summarily temporarily suspend such rule change if it appears to the Commission that such action is: (1) Necessary or appropriate in the public interest; (2) for the protection of investors; or (3) otherwise in furtherance of the purposes of the Act. If the Commission takes such action, the Commission shall institute proceedings to determine whether the proposed rule should be approved or disapproved.

IV. Solicitation of Comments

Interested persons are invited to submit written data, views and arguments concerning the foregoing, including whether the proposal is consistent with the Act. Comments may be submitted by any of the following methods:

Electronic Comments

- Use the Commission's Internet comment form (*http://www.sec.gov/rules/sro.shtml*); or
- Send an email to *rule-comments@sec.gov*. Please include File No. SR–BYX–2015–37 on the subject line.

Paper Comments

- Send paper comments in triplicate to Secretary, Securities and Exchange Commission, 100 F Street NE., Washington, DC 20549–1090.

All submissions should refer to File No. SR–BYX–2015–37. This file number should be included on the subject line if email is used. To help the Commission process and review your comments more efficiently, please use only one method. The Commission will post all comments on the Commission's Internet Web site (*http://www.sec.gov/rules/sro.shtml*). Copies of the submission, all subsequent amendments, all written statements with respect to the proposed rule change that are filed with the Commission, and all written communications relating to the proposed rule change between the Commission and any person, other than those that may be withheld from the public in accordance with the provisions of 5 U.S.C. 552, will be available for Web site viewing and printing in the Commission's Public Reference Room, 100 F Street NE., Washington, DC 20549, on official business days between the hours of 10:00 a.m. and 3:00 p.m. Copies of such filing will also be available for inspection and copying at the principal office of the Exchange. All comments received will be posted without change; the Commission does not edit personal identifying information from submissions. You should submit only information that you wish to make available publicly. All submissions should refer to File No. SR–BYX–2015–37 and should be submitted on or before September 23, 2015.

For the Commission, by the Division of Trading and Markets, pursuant to delegated authority.[13]

Robert W. Errett,

Deputy Secretary.

[FR Doc. 2015–21668 Filed 9–1–15; 8:45 am]

BILLING CODE 8011–01–P

[7] 15 U.S.C. 78s(b)(3)(A).

[8] 17 CFR 240.19b–4.

[9] The Exchange has fulfilled this requirement.

[10] 17 CFR 240.19b–4(f)(6).

[11] 17 CFR 240.19b–4(f)(6)(iii).

[12] For purposes only of waiving the operative date of this proposal, the Commission has considered the proposed rule's impact on efficiency, competition, and capital formation. 15 U.S.C. 78c(f).

[13] 17 CFR 200.30–3(a)(12).

SECURITIES AND EXCHANGE COMMISSION

[Release No. 34–75767; File No. SR–CBOE–2015–074]

Self-Regulatory Organizations; Chicago Board Options Exchange, Incorporated; Notice of Filing and Immediate Effectiveness of a Proposed Rule Change To Amend the Fees Schedule

August 27, 2015.

Pursuant to Section 19(b)(1) of the Securities Exchange Act of 1934 [1] and Rule 19b–4 thereunder,[2] notice is hereby given that on August 17, 2015, Chicago Board Options Exchange, Incorporated (''Exchange'' or ''CBOE'') filed with the Securities and Exchange Commission (''Commission'') the proposed rule change as described in Items I, II, and III below, which Items have been prepared by the Exchange. The Commission is publishing this notice to solicit comments on the proposed rule change from interested persons.

I. Self-Regulatory Organization's Statement of the Terms of Substance of the Proposed Rule Change

The Exchange proposes to amend its Fees Schedule. The text of the proposed rule change is available on the Exchange's Web site (*http://www.cboe.com/AboutCBOE/CBOELegalRegulatoryHome.aspx*), at the Exchange's Office of the Secretary, and at the Commission's Public Reference Room.

II. Self-Regulatory Organization's Statement of the Purpose of, and Statutory Basis for, the Proposed Rule Change

In its filing with the Commission, the Exchange included statements concerning the purpose of and basis for the proposed rule change and discussed any comments it received on the proposed rule change. The text of these statements may be examined at the places specified in Item IV below. The Exchange has prepared summaries, set forth in sections A, B, and C below, of the most significant aspects of such statements.

A. Self-Regulatory Organization's Statement of the Purpose of, and Statutory Basis for, the Proposed Rule Change

1. Purpose

The Exchange proposes to amend its Fees Schedule.[3] First, the Exchange proposes to eliminate references to CBOE Short-Term Volatility Index (''VXST'') options. Specifically, as of June 2015, the Exchange no longer lists VXST options. Accordingly, the Exchange proposes to delete from the Fees Schedule all references to VXST, as such references are no longer necessary and will be obsolete. The Exchange also proposes to amend Footnote 31 of the Fees Schedule. Particularly, the Exchange currently waives the SPXW Customer Priority Surcharge for orders in SPX Weeklys (''SPXW'') options in the SPXW electronic book that are executed during opening rotation on the final settlement date of VXST options and futures and which have the expiration that contribute to the VXST settlement calculation. As mentioned above, VXST options (and futures) are no longer listed. However, the Exchange notes that the CBOE Futures Exchange, LLC (''CFE'') recently introduced new futures with a weekly expiration of a 30-day VIX and the Exchange anticipates launching options with a weekly expiration of a 30-day VIX as well. The new VIX futures (and options) expirations are calculated using P.M.-settled SPXW options that expire 30 days later. As such, the Exchange proposes to replace ''VSXT options and futures'' with ''VIX options and futures'' in Footnote 31 as the Exchange believes it is not appropriate to assess the surcharge on those SPXW options that are used in determining the final settlement value on the final settlement date of the new VIX weekly options and futures.

2. Statutory Basis

The Exchange believes the proposed rule change is consistent with the Securities Exchange Act of 1934 (the ''Act'') and the rules and regulations thereunder applicable to the Exchange and, in particular, the requirements of Section 6(b) of the Act.[4] Specifically, the Exchange believes the proposed rule change is consistent with the Section 6(b)(5) [5] requirements that the rules of an exchange be designed to prevent fraudulent and manipulative acts and practices, to promote just and equitable principles of trade, to foster cooperation and coordination with persons engaged in regulating, clearing, settling, processing information with respect to, and facilitation transactions in securities, to remove impediments to and perfect the mechanism of a free and open market and a national market system, and, in general, to protect investors and the public interest. Additionally, the Exchange believes the proposed rule change is consistent with Section 6(b)(4) of the Act,[6] which requires that Exchange rules provide for the equitable allocation of reasonable dues, fees, and other charges among its Trading Permit Holders and other persons using its facilities.

The Exchange believes the removal of ''VXST'' references in the Fees Schedule maintains clarity in the Fees Schedule and promotes just and equitable principles of trade by eliminating potential confusion and removing impediments to and perfecting the mechanism of a free and open market and a national market system. The Exchange believes it is equitable and not unfairly discriminatory to exclude from the SPXW Customer Priority Surcharge those options that are executed during opening rotation and which have the expiration that contribute to the VIX weekly settlement calculation because, VIX weekly settlement values are based upon those SPXW options and the Exchange therefore wants to encourage trading in those options at the opening on settlement days. Additionally, the Exchange believes the proposed rule change will continue to encourage the trading of SPXW options that have the expiration that contribute to the now VIX weekly settlement calculation at the opening on settlement days, which will provide additional liquidity and enhance competition in those securities, which ultimately benefits all CBOE Trading Permit Holders (''TPHs'') and all investors.

B. Self-Regulatory Organization's Statement on Burden on Competition

The Exchange does not believe that the proposed rule changes will impose any burden on competition that are not necessary or appropriate in furtherance of the purposes of the Act. The Exchange does not believe that the proposed rule change will impose any burden on intramarket competition because the proposed waiver would apply equally to all CBOE TPHs who trade those SPXW options that are used in determining the final settlement value on the final settlement date of the

[1] 15 U.S.C. 78s(b)(1).

[2] 17 CFR 240.19b–4.

[3] The Exchange initially filed the proposed fee changes on August 5, 2015 (SR–CBOE–2015–071). On August 17, 2015, the Exchange withdrew that filing and submitted this filing.

[4] 15 U.S.C. 78f(b).

[5] 15 U.S.C. 78f(b)(5).

[6] 15 U.S.C. 78f(b)(4).

new VIX weekly options and futures. Additionally, the Exchange believes the proposed rule change will continue to encourage the trading of SPXW options that have the expiration that contribute to the now VIX weekly settlement calculation at the opening on settlement days, which will provide additional liquidity and enhance competition in those securities. The Exchange does not believe that the proposed rule changes will impose any burden on intermarket competition that is not necessary or appropriate in furtherance of the purposes of the Act because the proposed rule change applies only to CBOE. To the extent that the proposed changes make CBOE a more attractive marketplace for market participants at other exchanges, such market participants are welcome to become CBOE market participants.

C. Self-Regulatory Organization's Statement on Comments on the Proposed Rule Change Received From Members, Participants, or Others

The Exchange neither solicited nor received comments on the proposed rule change.

III. Date of Effectiveness of the Proposed Rule Change and Timing for Commission Action

The foregoing rule change has become effective pursuant to Section 19(b)(3)(A) of the Act [7] and paragraph (f) of Rule 19b–4 [8] thereunder. At any time within 60 days of the filing of the proposed rule change, the Commission summarily may temporarily suspend such rule change if it appears to the Commission that such action is necessary or appropriate in the public interest, for the protection of investors, or otherwise in furtherance of the purposes of the Act. If the Commission takes such action, the Commission will institute proceedings to determine whether the proposed rule change should be approved or disapproved.

IV. Solicitation of Comments

Interested persons are invited to submit written data, views, and arguments concerning the foregoing, including whether the proposed rule change is consistent with the Act. Comments may be submitted by any of the following methods:

Electronic Comments

- Use the Commission's Internet comment form (*http://www.sec.gov/rules/sro.shtml*); or
- Send an email to *rule-comments@sec.gov*. Please include File Number SR–CBOE–2015–074 on the subject line.

Paper Comments

- Send paper comments in triplicate to Secretary, Securities and Exchange Commission, 100 F Street NE., Washington, DC 20549–1090.

All submissions should refer to File Number SR–CBOE–2015–074. This file number should be included on the subject line if email is used. To help the Commission process and review your comments more efficiently, please use only one method. The Commission will post all comments on the Commission's Internet Web site (*http://www.sec.gov/rules/sro.shtml*). Copies of the submission, all subsequent amendments, all written statements with respect to the proposed rule change that are filed with the Commission, and all written communications relating to the proposed rule change between the Commission and any person, other than those that may be withheld from the public in accordance with the provisions of 5 U.S.C. 552, will be available for Web site viewing and printing in the Commission's Public Reference Room, 100 F Street NE., Washington, DC 20549 on official business days between the hours of 10:00 a.m. and 3:00 p.m. Copies of the filing also will be available for inspection and copying at the principal office of the Exchange. All comments received will be posted without change; the Commission does not edit personal identifying information from submissions. You should submit only information that you wish to make available publicly. All submissions should refer to File Number SR–CBOE–2015–074 and should be submitted on or before September 23, 2015.

For the Commission, by the Division of Trading and Markets, pursuant to delegated authority.[9]

Robert W. Errett,

Deputy Secretary.

[FR Doc. 2015–21671 Filed 9–1–15; 8:45 am]

BILLING CODE 8011–01–P

[7] 15 U.S.C. 78s(b)(3)(A).

[8] 17 CFR 240.19b–4(f).

[9] 17 CFR 200.30–3(a)(12).

SECURITIES AND EXCHANGE COMMISSION

[Release No. 34–75768; File No. SR–NSCC–2015–003]

Self-Regulatory Organizations; National Securities Clearing Corporation; Notice of Filing of Proposed Rule Change To Enhance NSCC's Margining Methodology as Applied to Family-Issued Securities of Certain NSCC Members

August 27, 2015.

Pursuant to section 19(b)(1) [1] of the Securities Exchange Act of 1934 (''Act'') and Rule 19b–4 [2] thereunder, notice is hereby given that on August 14, 2015, National Securities Clearing Corporation (''NSCC'') filed with the Securities and Exchange Commission (''Commission'') the proposed rule change as described in Items I, II and III below, which Items have been prepared by NSCC.[3] NSCC filed the proposed rule change pursuant to section 19(b)(2) [4] of the Act. The Commission is publishing this notice to solicit comments on the proposed rule change from interested persons.

I. Clearing Agency's Statement of the Terms of Substance of the Proposed Rule Change

The proposed rule change consists of amendments to NSCC's Rules & Procedures (''Rules'') in order to enhance NSCC's margining methodology as applied to family-issued securities of NSCC Members [5] that are placed on NSCC's ''Watch List'', *i.e.,* those Members who present a heightened credit risk to NSCC or have demonstrated higher risk related to their ability to meet settlement, as more fully described below.

II. Clearing Agency's Statement of the Purpose of, and Statutory Basis for, the Proposed Rule Change

In its filing with the Commission, NSCC included statements concerning the purpose of and basis for the proposed rule change and discussed any comments it received on the proposed

[1] 15 U.S.C. 78s(b)(1).

[2] 17 CFR 240.19b–4.

[3] On August 14, 2015, NSCC filed this proposed rule change as an advance notice (SR–NSCC–2015–803) with the Commission pursuant to section 806(e)(1) of the Dodd-Frank Wall Street Reform and Consumer Protection Act entitled the Payment, Clearing, and Settlement Supervision Act of 2010 (''Clearing Supervision Act''), 12 U.S.C. 5465(e)(1), and Rule 19b–4(n)(1)(i) of the Act, 17 CFR 240.19b–4(n)(1)(i). A copy of the advance notice is *available at http://www.dtcc.com/legal/sec-rule-filings.aspx.*

[4] 15 U.S.C. 78s(b)(2).

[5] Terms not defined herein are defined in the Rules, *available at http://dtcc.com/~/media/Files/Downloads/legal/rules/nscc_rules.pdf.*

rule change. The text of these statements may be examined at the places specified in Item IV below. NSCC has prepared summaries, set forth in sections A, B, and C below, of the most significant aspects of such statements.

(A) Clearing Agency's Statement of the Purpose of, and Statutory Basis for, the Proposed Rule Change

1. Purpose

As a central counterparty, NSCC occupies an important role in the securities settlement system by interposing itself between counterparties to financial transactions and thereby reducing the risk faced by participants and contributing to global financial stability. The effectiveness of a central counterparty's risk controls and the adequacy of its financial resources are critical to achieving these risk-reducing goals. In that context, NSCC continuously reviews its margining methodology in order to ensure the reliability of its margining in achieving the desired coverage. In order to be most effective, NSCC must take into consideration the risk characteristics specific to certain securities when margining those securities.

Among the various risks that NSCC considers when evaluating the effectiveness of its margining methodology are its counterparty risks and identification and mitigation of ''wrong-way'' risk, particularly specific wrong-way risk, defined as the risk that an exposure to a counterparty is highly likely to increase when the creditworthiness of that counterparty deteriorates.[6] NSCC has identified an exposure to wrong-way risk when it acts as central counterparty to a Member with respect to positions in securities that are issued by that Member or that Member's affiliate. These positions are referred to as ''family-issued securities.'' In the event that a Member with unsettled long positions in family-issued securities defaults, NSCC would close out those positions following a likely drop in the credit-worthiness of the issuer, possibly resulting in a loss to NSCC.

NSCC is proposing to address its exposure to this type of wrong-way risk in two steps. First, NSCC proposes in this filing to enhance its margin methodology as applied to the family-issued securities of its Members that are on its Watch List[7] by excluding these securities from the volatility component, or ''VaR'' charge, and then charging an amount calculated by multiplying the absolute value of the long net unsettled positions in that Member's family-issued securities by a percentage that is no less than 40%. The haircut rate to be charged would be determined based on the Member's rating on the credit risk rating matrix and the type of family-issued security submitted to NSCC. Fixed income securities that are family-issued securities would be charged a haircut rate of no less than 80% for firms that are rated 6 or 7 on the credit risk rating matrix, and no less than 40% for firms that are rated 5 on the credit risk rating matrix; and equity securities that are family-issued securities would be charged a haircut rate of 100% for firms that are rated 6 or 7 on the credit risk rating matrix, and no less than 50% for firms that are rated 5 on the credit risk rating matrix. NSCC would have the authority to adjust these haircut rates from time to time within these parameters as described in Procedure XV of NSCC's Rules without filing a proposed rule change with the Commission pursuant to section 19(b)(1) of the Act,[8] and the rules thereunder, or an advance notice with the Commission pursuant to section 806(e)(1) of the Clearing Supervision Act,[9] and the rules thereunder.

Because NSCC Members that are on its Watch List present a heightened credit risk to the clearing agency or have demonstrated higher risk related to their ability to meet settlement, NSCC believes that this charge would more effectively capture the risk characteristics of these positions and can help mitigate NSCC's exposure to wrong-way risk. NSCC proposes to amend section I(B)(1) of Procedure XV of its Rules, as marked on Exhibit 5 hereto,[10] to enhance its margining methodology as described herein.

Second, NSCC will continue to evaluate its exposures to wrong-way risk, specifically wrong-way risk presented by family-issued securities, including by reviewing the impact of expanding the application of the proposed margining methodology to the family-issued securities of those Members that are not on the Watch List. NSCC is proposing to apply the enhanced margining methodology to the family-issued securities of Members that are on the Watch List at this time because, as stated above, these Members present a heightened credit risk to the clearing agency or have demonstrated higher risk related to their ability to meet settlement. As such, there is a clear and more urgent need to address NSCC's exposure to wrong-way risk presented by these firms' family-issued securities.

However, any future change to the margining methodology as applied to the family-issued securities of Members that are not on the Watch List would be subject to a separate proposed rule change pursuant to section 19(b)(1) of the Act,[11] and the rules thereunder, and an advance notice pursuant to section 806(e)(1) of the Clearing Supervision Act,[12] and the rules thereunder.

Implementation Timeframe. Subject to Commission approval of this proposed rule change, Members would be advised of the implementation date through issuance of an NSCC Important Notice. NSCC expects to run these changes in a test environment for a three month parallel period prior to implementation. Details and dates regarding this test would be communicated to Members through an NSCC Important Notice. As stated above, NSCC will conduct additional analysis of its exposure to wrong-way risk, and, following implementation of this proposed rule change, will engage in outreach to its membership when evaluating whether to expand the application of the proposed enhanced margining methodology to Members not on its Watch List.

2. Statutory Basis

Pursuant to section 17A(b)(3)(F) of the Act, NSCC's Rules must be designed to promote the prompt and accurate clearance and settlement of securities transactions.[13] Rule 17Ad–22(b)(1), promulgated under the Act, requires NSCC to measure its credit exposures to its participants at least once a day and limit its exposures to potential losses from defaults by its participants under

[6] *See Principles for financial market infrastructures,* issued by the Committee on Payment and Settlement Systems and the Technical Committee of the International Organization of Securities Commissions 47 n.65 (April 2012), *available at http://www.bis.org/publ/cpss101a.pdf.*

[7] As part of its ongoing monitoring of its membership, NSCC utilizes an internal credit risk rating matrix to rate its risk exposures to its Members based on a scale from 1 (the strongest) to 7 (the weakest). Members that fall within the higher risk rating categories (*i.e.* 5, 6, and 7) are considered on NSCC's ''Watch List'', and may be subject to enhanced surveillance or additional margin charges, as permitted under NSCC's Rules. *See* Section 4 of Rule 2B and section I(B)(1) of Procedure XV of NSCC's Rules, *supra* Note 5.

[8] 15 U.S.C. 78s(b)(1).

[9] 12 U.S.C. 5465(e)(1).

[10] The Commission notes that Exhibit 5 is attached to the filing, not to this Notice.

[11] 15 U.S.C. 78s(b)(1).

[12] 12 U.S.C. 5465(e)(1).

[13] 5 U.S.C. 78q–1(b)(3)(F).

normal market conditions so that the operations of the clearing agency would not be disrupted and non-defaulting participants would not be exposed to losses that they cannot anticipate or control.[14] Rule 17Ad–22(b)(2), promulgated under the Act, requires NSCC to use risk-based models for setting margin requirements.[15]

By enhancing the margin methodology as applied to the family-issued securities of its Members that are on its Watch List, the proposed rule change would assist NSCC in collecting margin that more accurately reflects the risk characteristics of these securities, thereby limiting NSCC's exposures to potential losses from defaults by these Members under normal market conditions. By more closely capturing the risk characteristics of these positions, the proposed enhancement to the margining methodology would also assist NSCC in its continuous efforts to ensure the reliability and effectiveness of its risk-based margining methodology. In this way, the proposed rule change would help NSCC, as a central counterparty, maintain effective risk controls, contributing to the goal of maintaining financial stability in the event of a Member default.

Therefore, NSCC believes the proposed rule change is consistent with the requirements of the Act and the rules and regulations promulgated thereunder applicable to NSCC, in particular section 17A(b)(3)(F) of the Act and Rule 17Ad–22(b)(1) and (2), promulgated under the Act, cited above.

(B) Clearing Agency's Statement on Burden on Competition

The proposed rule change may impose a burden on competition by applying the enhanced margining methodology only to NSCC Members on NSCC's Watch List. However, NSCC believes any related burden on competition would be necessary and appropriate, as permitted by section 17A(b)(3)(I) of the Act for a number of reasons.[16]

First, while NSCC will continue to review its exposures to wrong-way risk and will consider expanding the application of the proposed margining methodology to additional Members, NSCC has determined to initially limit the applicability of the proposed rule change to Members on its Watch List because those Members present a heightened credit risk to the clearing agency or have demonstrated a higher risk in their ability to meet settlement. Second, by limiting NSCC's exposures to losses that it may face in clearing family-issued securities of such Members, the proposed rule change would contribute to the goal of maintaining financial stability in the event of the default of a Member on the Watch List, which would help facilitate the prompt and accurate clearance and settlement of securities transactions and protect investors and the public interest, in furtherance of the requirements of the Act applicable to NSCC, as discussed above.

As such, NSCC believes any burden on competition resulting from the proposed rule change would be both necessary and appropriate in furtherance of the purposes of the Act, in particular section 17A(b)(3)(F) of the Act and Rule 17Ad–22(b)(1) and (2), promulgated under the Act, cited above.

(C) Clearing Agency's Statement on Comments on the Proposed Rule Change Received From Members, Participants, or Others

In November 2013, NSCC engaged in outreach to its Members by providing those Members with a description of the proposed rule change and the results of an impact study showing the potential impact of this proposal on Members' Clearing Fund required deposits. NSCC did not receive any written comments relating to this proposed rule change in response to this outreach. NSCC will notify the Commission of any written comments received by NSCC.

III. Date of Effectiveness of the Proposed Rule Change, and Timing for Commission Action

Within 45 days of the date of publication of this notice in the **Federal Register** or within such longer period up to 90 days (i) as the Commission may designate if it finds such longer period to be appropriate and publishes its reasons for so finding or (ii) as to which the self-regulatory organization consents, the Commission will:

(A) By order approve or disapprove such a proposed rule change, or

(B) institute proceedings to determine whether the proposed rule change should be disapproved.

The proposal shall not take effect until all regulatory actions required with respect to the proposal are completed.

IV. Solicitation of Comments

Interested persons are invited to submit written data, views and arguments concerning the foregoing, including whether the proposed rule change is consistent with the Act. Comments may be submitted by any of the following methods:

Electronic Comments

- Use the Commission's Internet comment form (*http://www.sec.gov/rules/sro.shtml*); or
- Send an email to *rule-comments@sec.gov.* Please include File Number SR–NSCC–2015–003 on the subject line.

Paper Comments

- Send paper comments in triplicate to Brent J. Fields, Secretary, Securities and Exchange Commission, 100 F Street NE., Washington, DC 20549–1090.

All submissions should refer to File Number SR–NSCC–2015–003. This file number should be included on the subject line if email is used. To help the Commission process and review your comments more efficiently, please use only one method. The Commission will post all comments on the Commission's Internet Web site (*http://www.sec.gov/rules/sro.shtml*). Copies of the submission, all subsequent amendments, all written statements with respect to the proposed rule change that are filed with the Commission, and all written communications relating to the proposed rule change between the Commission and any person, other than those that may be withheld from the public in accordance with the provisions of 5 U.S.C. 552, will be available for Web site viewing and printing in the Commission's Public Reference Room, 100 F Street NE., Washington, DC 20549 on official business days between the hours of 10:00 a.m. and 3:00 p.m. Copies of the filing also will be available for inspection and copying at the principal office of NSCC and on DTCC's Web site (*http://dtcc.com/legal/sec-rule-filings.aspx*). All comments received will be posted without change; the Commission does not edit personal identifying information from submissions. You should submit only information that you wish to make available publicly. All submissions should refer to File Number SR–NSCC–2015–003 and should be submitted on or before September 23, 2015.

For the Commission, by the Division of Trading and Markets, pursuant to delegated authority.[17]

Robert W. Errett,

Deputy Secretary.

[FR Doc. 2015–21670 Filed 9–1–15; 8:45 am]

BILLING CODE 8011–01–P

[14] 17 CFR 240.17Ad–22(b)(1).

[15] 17 CFR 240.17Ad–22(b)(2).

[16] 5 U.S.C. 78q–1(b)(3)(I).

[17] 17 CFR 200.30–3(a)(12).

DEPARTMENT OF STATE

[Public Notice: 9251]

Imposition of Nonproliferation Measures Against Foreign Persons, Including a Ban on U.S. Government Procurement

AGENCY: Department of State.

ACTION: Notice.

SUMMARY: A determination has been made that a number of foreign persons have engaged in activities that warrant the imposition of measures pursuant to Section 3 of the Iran, North Korea, and Syria Nonproliferation Act. The Act provides for penalties on foreign entities and individuals for the transfer to or acquisition from Iran since January 1, 1999; the transfer to or acquisition from Syria since January 1, 2005; or the transfer to or acquisition from North Korea since January 1, 2006, of goods, services, or technology controlled under multilateral control lists (Missile Technology Control Regime, Australia Group, Chemical Weapons Convention, Nuclear Suppliers Group, Wassenaar Arrangement) or otherwise having the potential to make a material contribution to the development of weapons of mass destruction (WMD) or cruise or ballistic missile systems. The latter category includes (a) items of the same kind as those on multilateral lists but falling below the control list parameters when it is determined that such items have the potential of making a material contribution to WMD or cruise or ballistic missile systems, (b) items on U.S. national control lists for WMD/missile reasons that are not on multilateral lists, and (c) other items with the potential of making such a material contribution when added through case-by-case decisions.

DATES: *Effective Date:* September 2, 2015.

FOR FURTHER INFORMATION CONTACT: On general issues: Pam Durham, Office of Missile, Biological, and Chemical Nonproliferation, Bureau of International Security and Nonproliferation, Department of State, Telephone (202) 647–4930. For U.S. Government procurement ban issues: Eric Moore, Office of the Procurement Executive, Department of State, Telephone: (703) 875–4079.

SUPPLEMENTARY INFORMATION: On August 21, 2015 the U.S. Government determined that the measures authorized in Section 3 of the Iran, North Korea, and Syria Nonproliferation Act (Pub. L. 109–353) shall apply to the following foreign persons identified in the report submitted pursuant to Section 2(a) of the Act:

BST Technology and Trade Company (China) and any successor, sub-unit, or subsidiary thereof;

Dalian Sunny Industries (China) [also known as LIMMT] and any successor, sub-unit, or subsidiary thereof;

Li Fang Wei (China) [also known as Karl Lee];

Tianjin Flourish Chemical Company (China) and any successor, sub-unit, or subsidiary thereof;

Qasem Soleimani (Iran);

Iranian Revolutionary Guard Corps (IRGC) Qods Force (Iran) and any successor, sub-unit, or subsidiary thereof;

Rock Chemie (Iran) and any successor, sub-unit, or subsidiary thereof;

Polestar Trading Company, Ltd. (North Korean entity in China) and any successor, sub-unit, or subsidiary thereof;

RyonHap-2 (North Korea) and any successor, sub-unit, or subsidiary thereof;

Instrument Design Bureau (KBP) Tula (Russia) and any successor, sub-unit, or subsidiary thereof;

Joint Stock Company Katod (Russia) and any successor, sub-unit, or subsidiary thereof;

JSC Mic NPO Mashinostroyenia (NPOM) (Russia) and any successor, sub-unit, or subsidiary thereof;

Rosoboronexport (ROE) (Russia) and any successor, sub-unit, or subsidiary thereof:

Russian Aircraft Corporation (RAC) MiG (Russia) and any successor, sub-unit, or subsidiary thereof;

Sudanese Armed Forces (SAF) (Sudan) and any successor, sub-unit, or subsidiary thereof;

Vega Aeronautics (Sudan) and any successor, sub-unit, or subsidiary thereof;

Yarmouk Complex (Sudan) and any successor, sub-unit, or subsidiary thereof;

Ayman al Shaher (Syria);

Hizballah facilitators for logistics (Syria) and any successor, sub-unit, or subsidiary thereof;

Lebanese Hizballah (Syria) and any successor, sub-unit, or subsidiary thereof;

Syrian Air Force (Syria) and any successor, sub-unit, or subsidiary thereof;

Multimat Ic ve Dis Ticaret Pazarlama Limited (Turkey) and any successor, sub-unit, or subsidiary thereof; and

Eliya General Trading (United Arab Emirates) and any successor, sub-unit, or subsidiary thereof.

Accordingly, pursuant to Section 3 of the Act, the following measures are imposed on these persons:

1. No department or agency of the United States Government may procure or enter into any contract for the procurement of any goods, technology, or services from these foreign persons, except to the extent that the Secretary of State otherwise may determine;

2. No department or agency of the United States Government may provide any assistance to these foreign persons, and these persons shall not be eligible to participate in any assistance program of the United States Government, except to the extent that the Secretary of State otherwise may determine;

3. No United States Government sales to these foreign persons of any item on the United States Munitions List are permitted, and all sales to these persons of any defense articles, defense services, or design and construction services under the Arms Export Control Act are terminated; and

4. No new individual licenses shall be granted for the transfer to these foreign persons of items the export of which is controlled under the Export Administration Act of 1979 or the Export Administration Regulations, and any existing such licenses are suspended.

These measures shall be implemented by the responsible departments and agencies of the United States Government and will remain in place for two years from the effective date, except to the extent that the Secretary of State may subsequently determine otherwise.

Dated: August 28, 2015.

Vann H. Van Diepen,

Acting Assistant Secretary of State for International, Security and Nonproliferation.

[FR Doc. 2015–21778 Filed 9–1–15; 8:45 am]

BILLING CODE 4710–27–P

DEPARTMENT OF TRANSPORTATION

Federal Aviation Administration

Notice of Release From Surplus Property Deed Obligations at Luke Auxiliary Airfield #6, Buckeye, Maricopa County, Arizona

AGENCY: Federal Aviation Administration, DOT.

ACTION: Notice of request to release airport land.

SUMMARY: The Federal Aviation Administration (FAA) proposes to rule and invites public comment on the application for a release of approximately 2.99 acres of airport

property at Luke Auxiliary Airfield #6, Buckeye, Maricopa County, Arizona from all conditions contained in the Surplus Property Deed since the parcel of land is not needed for airport purposes. The reuse of the land for a roadway improvement project by the City of Buckeye represents an acceptable disposition of the land that is not being used for airport purposes. The property will be sold for its fair market value and the proceeds used for an airport purpose, thus serving the interests of civil aviation.

DATES: Comments must be received on or before October 2, 2015.

FOR FURTHER INFORMATION CONTACT: Comments on the request may be mailed or delivered to the FAA at the following address: Mike N. Williams, Manager, Airports District Office, Federal Register Comment, Federal Aviation Administration, Phoenix Airports District Office, 3800 N. Central Avenue, Suite 1025, Phoenix, Arizona 85012. In addition, one copy of the comment submitted to the FAA must be mailed or delivered to Ruben Ojeda, Right of Way Section Manager, Arizona State Land Department, 1616 W. Adams Street, Phoenix, Arizona 85007–3212.

SUPPLEMENTARY INFORMATION: In accordance with the Wendell H. Ford Aviation Investment and Reform Act for the 21st Century (AIR 21), Public Law 106–181 (Apr. 5, 2000; 114 Stat. 61), this notice must be published in the **Federal Register** 30 days before the Secretary may waive any condition imposed on a federally obligated airport by surplus property conveyance deeds or grant agreements.

The following is a brief overview of the request:

The Arizona State Land Department, Phoenix, Maricopa County, Arizona requested a release from the conditions contained in the Surplus Property Deed for approximately 2.99 acres of airport land. The property is located on the southern and northern sides of the former airfield, on the north side of Yuma Road and the south of Van Buren Street. The land is presently unused and undeveloped. The land is needed for roadway improvements by the City of Buckeye. The Arizona State Land Department agrees to the sale of the land to the City of Buckeye since the property is not needed or being used for airport purposes. The project will aid traffic flow for the City of Buckeye. The sale price will be based on its appraised market value and the sale proceeds will be used for airport purposes by the State. The use of the property for a public roadway will not affect the remainder of the airfield property. The State will be properly compensated, thereby serving the interests of civil aviation.

Issued in Hawthorne, California, on August 25, 2015.

Brian Q. Armstrong,

Manager, Safety and Standards, Airports Division, Western-Pacific Region.

[FR Doc. 2015–21781 Filed 9–1–15; 8:45 am]

BILLING CODE 4910–13–P

DEPARTMENT OF TRANSPORTATION

Federal Aviation Administration

[Summary Notice No. PE–2015–54]

Petition for Exemption; Summary of Petition Received

AGENCY: Federal Aviation Administration (FAA), DOT.

ACTION: Notice of petition for exemption received.

SUMMARY: This notice contains a summary of a petition seeking relief from specified requirements of Title 14, Code of Federal Regulations (14 CFR). The purpose of this notice is to improve the public's awareness of, and participation in, this aspect of the FAA's regulatory activities. Neither publication of this notice nor the inclusion or omission of information in the summary is intended to affect the legal status of the petition or its final disposition.

DATES: Comments on this petition must identify the petition docket number involved and must be received on or before September 22, 2015.

ADDRESSES: You may send comments identified by docket number FAA–2015–3166 using any of the following methods:

- Government-wide rulemaking Web site: Go to *http://www.regulations.gov* and follow the instructions for sending your comments digitally.
- Mail: Send comments to the Docket Management Facility; U.S. Department of Transportation, 1200 New Jersey Avenue SE., West Building Ground Floor, Room W12–140, Washington, DC 20590.
- Fax: Fax comments to the Docket Management Facility at 202–493–2251.
- Hand Delivery: Bring comments to the Docket Management Facility in Room W12–140 of the West Building Ground Floor at 1200 New Jersey Avenue SE., Washington, DC, between 9 a.m. and 5 p.m., Monday through Friday, except Federal holidays.

Privacy: We will post all comments we receive, without change, to *http://www.regulations.gov,* including any personal information you provide. Using the search function of our docket Web site, anyone can find and read the comments received into any of our dockets, including the name of the individual sending the comment (or signing the comment for an association, business, labor union, etc.). You may review the DOT's complete Privacy Act Statement in the **Federal Register** published on April 11, 2000 (65 FR 19477–78).

Docket: To read background documents or comments received, go to *http://www.regulations.gov* at any time or to the Docket Management Facility in Room W12–140 of the West Building Ground Floor at 1200 New Jersey Avenue SE., Washington, DC, between 9 a.m. and 5 p.m., Monday through Friday, except Federal holidays.

FOR FURTHER INFORMATION CONTACT: Deana Stedman, ANM–113, Federal Aviation Administration, 1601 Lind Avenue SW., Renton, WA 98057–3356, email *deana.stedman@faa.gov,* phone (425) 227–2148; or Sandra Long, ARM–200, Office of Rulemaking, Federal Aviation Administration, 800 Independence Avenue SW., Washington, DC 20591, email *sandra.long@faa.gov*, phone (202) 267–4714.

This notice is published pursuant to 14 CFR 11.85.

Issued in Washington, DC, on August 27, 2015.

Lirio Liu,

Director, Office of Rulemaking.

Petition for Exemption

Docket No.: FAA–2015–3166.

Petitioner: The Boeing Company.

Section of 14 CFR Affected: §§ 25.901(c) and 25.981(a)(3).

Description of Relief Sought: Petitioner seeks an exemption from the requirements of 14 CFR 25.901(c) Amendment 25–126 and 25.981(a)(3) Amendment 25–125 to allow planned type design changes to the center wing tank Fuel Quantity Indication System (FQIS) fuselage wiring installation on Model 747–400F and 747–400BCF airplanes.

[FR Doc. 2015–21706 Filed 9–1–15; 8:45 am]

BILLING CODE 4910–13–P

DEPARTMENT OF TRANSPORTATION

Federal Railroad Administration

[Docket Number FRA–2006–23687]

Petition for Approval of Product Safety Plan

In accordance with part 211 of title 49 of the Code of Federal Regulations (CFR), this document provides the

public notice that by a document dated August 3, 2015, BNSF Railway (BNSF) has petitioned the Federal Railroad Administration (FRA) for approval of its Product Safety Plan (PSP) for its ElectroBlox Wayside Interface Unit (WIU). FRA assigned the petition Docket Number FRA–2006–23687.

The PSP submitted is intended to meet the requirements prescribed in 49 CFR part 236, subpart H, Standards for Processor-Based Signal and Train Control Systems, in § 236.907. As such, BNSF maintains that the ElectroBlox system was designed in a safe manner, reliably executes the functions of an interoperable Positive Train Control (PTC) wayside component, and does not result in risk that exceeds the previous condition.

The ElectroBlox system is used to translate discrete vital inputs into wayside status messages that comply with the Interoperable Train Control (ITC) WIU specification. This system targets applications where existing microprocessor-based equipment either does not exist or in lieu of integrated WIU PTC upgrades to existing electronic signal controllers.

A copy of the petition, as well as any written communications concerning the petition, is available for review online at *www.regulations.gov* and in person at the U.S. Department of Transportation's (DOT) Docket Operations Facility, 1200 New Jersey Ave. SE., W12–140, Washington, DC 20590. The Docket Operations Facility is open from 9 a.m. to 5 p.m., Monday through Friday, except Federal Holidays.

Interested parties are invited to participate in these proceedings by submitting written views, data, or comments. FRA does not anticipate scheduling a public hearing in connection with these proceedings since the facts do not appear to warrant a hearing. If any interested party desires an opportunity for oral comment, they should notify FRA, in writing, before the end of the comment period and specify the basis for their request.

All communications concerning these proceedings should identify the appropriate docket number and may be submitted by any of the following methods:

- Web site: *http://www.regulations.gov.* Follow the online instructions for submitting comments.
- Fax: 202–493–2251.
- Mail: Docket Operations Facility, U.S. Department of Transportation, 1200 New Jersey Avenue SE., W12–140, Washington, DC 20590.
- Hand Delivery: 1200 New Jersey Avenue SE., Room W12–140, Washington, DC 20590, between 9 a.m. and 5 p.m., Monday through Friday, except Federal Holidays.

Communications received by October 19, 2015 will be considered by FRA before final action is taken. Comments received after that date will be considered as far as practicable.

Anyone is able to search the electronic form of any written communications and comments received into any of our dockets by the name of the individual submitting the comment (or signing the document, if submitted on behalf of an association, business, labor union, etc.). In accordance with 5 U.S.C. 553(c), DOT solicits comments from the public to better inform its processes. DOT posts these comments, without edit, including any personal information the commenter provides, to *www.regulations.gov,* as described in the system of records notice (DOT/ALL–14 FDMS), which can be reviewed at *www.dot.gov/privacy.* See also *http://www.regulations.gov/#!privacyNotice* for the privacy notice of regulations.gov.

Issued in Washington, DC, on August 27, 2015.

Ron Hynes,

Director, Office of Technical Oversight.

[FR Doc. 2015–21721 Filed 9–1–15; 8:45 am]

BILLING CODE 4910–06–P

DEPARTMENT OF TRANSPORTATION

National Highway Traffic Safety Administration

[Docket No. DOT–NHTSA–2015–0058]

Notice and Request for Comments

AGENCY: National Highway Traffic Safety Administration (NHTSA), Department of Transportation (DOT).

ACTION: Request for public comment on proposed collection of information.

SUMMARY: The Department of Transportation (DOT) invites public comments about our intention to request the Office of Management and Budget (OMB) approval to renew an information collection. Before a Federal agency can collect certain information from the public, it must receive approval from the Office of Management and Budget (OMB). Under procedures established by the Paperwork Reduction Act of 1995, before seeking OMB approval, Federal agencies must solicit public comment on proposed collections of information, including extension and reinstatement of previously approved collections.

DATES: Written comments should be submitted by November 2, 2015.

ADDRESSES: You may submit comments identified by Docket No. NHTSA–2015–0058 through one of the following methods:

- *Federal eRulemaking Portal: http://www.regulations.gov.* Follow the online instructions for submitting comments.
- *Fax:* 202–493–2251
- *Mail or Hand Delivery:* Docket Management Facility, U.S. Department of Transportation, 1200 New Jersey Avenue SE, West Building, Room W12–140, Washington, DC 20590, between 9 a.m. and 5 p.m., Monday through Friday, except on Federal holidays.

Instructions: All submission must include the agency name and docket number for this proposed collection of information. Note that all comments received will be posted without change to *http://www.regulation.gov,* including any personal information provided. Please see the Privacy heading below.

Privacy Act: Anyone is able to search the electronic form of all comments received into any of our dockets by the name of the individual submitting the comment (or signing the comment, if submitted on behalf of an association, business, labor union, *etc.*). You may review DOT's complete Privacy Act Statement in the **Federal Register** published on April 11, 2000 (65 FR 19477–78) or you may visit *http://www.dot.gov/privacy.html* .

Docket: For access to the docket to read comments received, go to *http://www.regulations.gov,* or the street address listed above. Follow the online instructions for accessing the dockets.

FOR FURTHER INFORMATION CONTACT: Complete copies of each request for collection of information may be obtained at no charge from Sean H. McLaurin, NHTSA, 1200 New Jersey Avenue SE., Room W55–336, NVS–420, Washington, DC 20590. Mr. McLaurin's telephone number is (202) 366–4800. Please identify the relevant collection of information by referring to its OMB Control Number.

SUPPLEMENTARY INFORMATION: Under the Paperwork Reduction Act of 1995, before an agency submits a proposed collection of information to OMB for approval, it must first publish a document in the **Federal Register** providing a 60-day comment period and otherwise consult with members of the public and affected agencies concerning each proposed collection of information. The OMB has promulgated regulations describing what must be included in such a document. Under OMB's regulation (at 5 CFR 1320.8(d)), an agency must ask for public comment on the following:

(i) Whether the proposed collection of information is necessary for the proper

performance of the functions of the agency, including whether the information will have practical utility;

(ii) The accuracy of the agency's estimate of the burden of the proposed collection of information, including the validity of the methodology and assumptions used;

(iii) How to enhance the quality, utility, and clarity of the information to be collected;

(iv) How to minimize the burden of the collection of information on those who are to respond, including the use of appropriate automated, electronic, mechanical, or other technological collection techniques or other forms of information technology, *e.g.* permitting electronic submission of responses.

In compliance with these requirements, NHTSA asks for public comments on the following proposed collection of information for which the agency is seeking approval from OMB:

OMB Control Number: 2127–0001.

Title: 23 CFR part 1327 Procedures for Participating In and Receiving Information from the National Driver Register.

Type of Review: Extension of Clearance.

Abstract: The purpose of the NDR is to assist States and other authorized users in obtaining information about problem drivers. State motor vehicle agencies submit and use the information for driver licensing purposes. Other users obtain the information for transportation safety purposes.

Affected Public: State, Local, or Tribal Government.

Estimated Number of Respondents: The number of respondents is 51—the 50 States and the District of Columbia.

Total Annual Burden: 2,847 hours.

Form Numbers: This collection of information uses no standard form.

Public Comments Invited: You are asked to comment on any aspect of this information collection, including (a) Whether the proposed collection of information is necessary for the Department's performance; (b) the accuracy of the estimated burden; (c) ways for the Department to enhance the quality, utility and clarity of the information collection; and (d) ways that the burden could be minimized without reducing the quality of the collected information. The agency will summarize and/or include your comments in the request for OMB's clearance of this information collection.

Authority: The Paperwork Reduction Act of 1995, 44 U.S.C. Chapter 35, as amended; 5 CFR part 1320; and 49 CFR 1.95.

Terry Shelton,

Associate Administrator for the National Center for Statistics and Analysis.

[FR Doc. 2015–21642 Filed 9–1–15; 8:45 am]

BILLING CODE 4910–59–P

DEPARTMENT OF TRANSPORTATION OFFICE OF THE SECRETARY

Application of Harris Aircraft Services, Inc. for Certificate Authority

AGENCY: Department of Transportation.

ACTION: Notice extending time to file objections and answers—Docket DOT–OST–2014–0145.

SUMMARY: The Department of Transportation is extending the period for the filing of objections to Order 2015–8–10 to allow all interested persons to show cause why it should not issue an order finding Harris Aircraft Services, Inc., fit, willing, and able, and awarding it a certificate of public convenience and necessity to conduct interstate scheduled air transportation of persons, property and mail.

DATES: Persons wishing to file objections should do so no later than September 8, 2015.

ADDRESSES: Objections and answers to objections should be filed in Docket DOT–OST–2014–0145 and addressed to Docket Operations, (M–30, Room W12–140), U.S. Department of Transportation, 1200 New Jersey Avenue SE., Washington, DC 20590, and should be served upon the parties listed in Attachment A to the order.

FOR FURTHER INFORMATION CONTACT: Barbara Snoden, Air Carrier Fitness Division (X–56, Room W86–471), U.S. Department of Transportation, 1200 New Jersey Avenue SE., Washington, DC 20590, (202) 366–4834.

Dated: August 27, 2015.

Todd M. Homan,

Director, Office of Aviation Analysis.

[FR Doc. 2015–21722 Filed 9–1–15; 8:45 am]

BILLING CODE 4910–9X–P

DEPARTMENT OF THE TREASURY

Office of Foreign Assets Control

Unblocking of Specially Designated Nationals and Blocked Persons

AGENCY: Office of Foreign Assets Control, Treasury.

ACTION: Notice.

SUMMARY: The Department of the Treasury's Office of Foreign Assets Control (OFAC) is publishing the names of the individuals and entities whose property and interests in property have been unblocked pursuant to Executive Order 12978 of October 21, 1995, ''Blocking Assets and Prohibiting Transactions With Significant Narcotics Traffickers.'' Additionally, OFAC is publishing an update to the identifying information of two individuals currently included in the list of Specially Designated Nationals and Blocked Persons (SDN List).

DATES: The unblocking and removal from the list of Specially Designated Nationals and Blocked Persons (SDN List) of the five individuals and five entities identified in this notice whose property and interests in property were blocked pursuant to Executive Order 12978 of October 21, 1995, is effective on August 27, 2015. Additionally, the update to the SDN List of the identifying information of the two individuals identified in this notice is also effective on August 27, 2015.

FOR FURTHER INFORMATION CONTACT: Assistant Director, Sanctions Compliance & Evaluation, Department of the Treasury, Office of Foreign Assets Control, Washington, DC 20220, Tel: (202) 622–2490.

SUPPLEMENTARY INFORMATION:

Electronic and Facsimile Availability

This document and additional information concerning OFAC are available from OFAC's Web site (*www.treasury.gov/ofac*) or via facsimile through a 24-hour fax-on demand service at (202) 622–0077.

Background

On October 21, 1995, the President, invoking the authority, *inter alia,* of the International Emergency Economic Powers Act (50 U.S.C. 1701–1706) (IEEPA), issued Executive Order 12978 (60 FR 54579, October 24, 1995) (the Order). In the Order, the President declared a national emergency to deal with the threat posed by significant foreign narcotics traffickers centered in Colombia and the harm that they cause in the United States and abroad.

Section 1 of the Order blocks, with certain exceptions, all property and interests in property that are in the United States, or that hereafter come within the United States or that are or hereafter come within the possession or control of United States persons, of: (1) The foreign persons listed in an Annex to the Order; (2) any foreign person determined by the Secretary of Treasury, in consultation with the

Attorney General and the Secretary of State: (a) to play a significant role in international narcotics trafficking centered in Colombia; or (b) to materially assist in, or provide financial or technological support for or goods or services in support of, the narcotics trafficking activities of persons designated in or pursuant to the Order; and (3) persons determined by the Secretary of the Treasury, in consultation with the Attorney General and the Secretary of State, to be owned or controlled by, or to act for or on behalf of, persons designated pursuant to the Order.

On August 27, 2015, the Associate Director of the Office of Global Targeting removed from the SDN List the individuals and entities listed below, whose property and interests in property were blocked pursuant to the Order:

Individuals

1. JAIMES RIVERA, Jose Isidro, c/o SOCOVALLE LTDA., Cali, Colombia; c/o COMERCIALIZADORA INTERNACIONAL VALLE DE ORO S.A., Cali, Colombia; c/o GANADERIAS DEL VALLE S.A., Cali, Colombia; c/o INVERSIONES EL PENON S.A., Cali, Colombia; c/o CONSULTORIA EMPRESARIAL ESPECIALIZADA LTDA., Cali, Colombia; c/o ADMINISTRACION INMOBILIARIA BOLIVAR S.A., Cali, Colombia; c/o INVERSIONES GEMINIS S.A., Cali, Colombia; c/o CONCRETOS CALI S.A., Cali, Colombia; c/o CONSTRUCTORA DIMISA LTDA., Cali, Colombia; c/o INMOBILIARIA U.M.V. S.A., Cali, Colombia; c/o INDUSTRIA DE CARNES LTDA., Pereira, Colombia; c/o INVERSIONES BETANIA LTDA., Cali, Colombia; DOB 07 Nov 1949; Cedula No. 10090006 (Colombia) (individual) [SDNT].
2. CARDENAS REAL, Juan, c/o GRUPO C.L.P. CONSTRUCTORA S.A. DE C.V., Guadalajara, Jalisco, Mexico; c/o GRUPO CONSTRUCTOR INMOBILIARIO PACAR S.A. DE C.V., Guadalajara, Jalisco, Mexico; Calle Lopez Cotilla 2032, Piso 10, Colonia Americana, Guadalajara, Jalisco, Mexico; Avenida Nicolas Copernico, No. 3924, Fraccionamiento Arboledas, Sector Juarez, Guadalajara, Jalisco, Mexico; Clz. Revolucion 2259, Guadalajara, Jalisco, Mexico; DOB 20 Jan 1944; POB Guadalajara, Jalisco, Mexico; nationality Mexico; citizen Mexico; C.U.R.P. CARJ440120HJCRLN08 (Mexico); alt. C.U.R.P. CARJ440120MJCRLN08 (Mexico) (individual) [SDNT].
3. PACHECO MEJIA, Luis, Calle Paseo de Los Virreyes No. 4022, Colonia San Wenceslao, Zapopan, Jalisco, Mexico; c/o FLORIDA SOCCER CLUB S.A., Medellin, Colombia; c/o GRANOPRODUCTOS AGRICOLAS S.A. DE C.V., Guadalajara, Jalisco, Mexico; c/o GRUPO C.L.P. CONSTRUCTORA S.A. DE C.V., Guadalajara, Jalisco, Mexico; c/o GRUPO CONSTRUCTOR INMOBILIARIO PACAR S.A. DE C.V., Guadalajara, Jalisco, Mexico; c/o CIMIENTOS LA TORRE S.A. DE C.V., Guadalajara, Jalisco, Mexico; DOB 18 Jun 1951; POB Guadalajara, Jalisco, Mexico; Passport 03140120376 (Mexico); R.F.C. PAML–510618–ED7 (Mexico) (individual) [SDNT].
4. HENAO GONZALEZ, Lina Marcela, Avenida 4 Oeste No. 5–97, Apt. 1001, Cali, Colombia; c/o AGRICOLA GANADERA HENAO GONZALEZ Y CIA. S.C.S., Cartago, Colombia; c/o COMPANIA AGROINVERSORA HENAGRO LTDA., Cartago, Colombia; c/o DESARROLLOS COMERCIALES E INDUSTRIALES HENAO GONZALEZ Y CIA. S.C.S., Cartago, Colombia; c/o ORGANIZACION EMPRESARIAL A DE J HENAO M E HIJOS Y CIA. S.C.S., Cartago, Colombia; DOB 10 May 1985; POB Cali, Valle, Colombia; Cedula No. TI–85051037834 (Colombia); Passport AF228090 (Colombia); alt. Passport TI–85051037834 (Colombia); NIT # 650000091–9 (Colombia) (individual) [SDNT].
5. HENAO GONZALEZ, Olga Patricia, Avenida 4 Oeste No. 5–97, Apt. 1001, Cali, Colombia; c/o AGRICOLA GANADERA HENAO GONZALEZ Y CIA. S.C.S., Cartago, Colombia; c/o COMPANIA AGROINVERSORA HENAGRO LTDA., Cartago, Colombia; c/o DESARROLLOS COMERCIALES E INDUSTRIALES HENAO GONZALEZ Y CIA. S.C.S., Cartago, Colombia; c/o ORGANIZACION EMPRESARIAL A DE J HENAO M E HIJOS Y CIA. S.C.S., Cartago, Colombia; DOB 18 Jan 1988; POB Cali, Valle, Colombia; Cedula No. RN12524986 (Colombia); Passport AG762459 (Colombia); alt. Passport RN12524986 (Colombia); NIT # 600018532–2 (Colombia) (individual) [SDNT].

Entities

1. FLORIDA SOCCER CLUB S.A. (a.k.a. CORPORACION DEPORTIVA FLORIDA SOCCER CLUB; a.k.a. FSC S.A.), Calle 48 No. 70–80 Ofc. 115, Medellin, Colombia; Calle 49B No. 74–31 Sector Estadio, Medellin, Colombia; Itagui, Antioquia, Colombia; NIT # 811046159–2 (Colombia) [SDNT].
2. GRANOPRODUCTOS AGRICOLAS S.A. DE C.V., Zona Conurbada, Guadalajara, Jalisco, Mexico [SDNT].
3. GRUPO CONSTRUCTOR INMOBILIARIO PACAR S.A. DE C.V., Guadalajara, Jalisco, Mexico [SDNT].
4. COMPANIA AGROPECUARIA DEL SUR LTDA. (a.k.a. COAGROSUR LTDA.; f.k.a. MARIA NURY CAICEDO E HIJAS Y CIA S.C.S.), Calle 114A No. 11A–40, Apt. 302, Bogota, Colombia; NIT # 800107990–1 (Colombia) [SDNT].
5. INVERSIONES AGROINDUSTRIALES DEL OCCIDENTE LTDA. (a.k.a. INAGROCCIDENTE LTDA.; f.k.a. RENTERIA CAICEDO E HIJAS Y CIA S.C.S.), Calle 114A No. 11A–40, Apt. 302, Bogota, Colombia; NIT # 800107993–1 (Colombia) [SDNT].

Additionally, on August 27, 2015, the Associate Director of the Office of Global Targeting updated the SDN record for two individuals listed below, whose property and interests in property continue to be blocked pursuant to the Order:

Individuals

1. CASTRILLON VASCO, Jhon Jairo; DOB 30 Mar 1960; POB Medellin, Colombia; Cedula No. 71603587 (Colombia) (individual) [SDNT] (Linked To: HOTEL LA CASCADA S.A.; Linked To: INVERSIONES Y REPRESENTACIONES S.A.).
2. RENTERIA MANTILLA, Carlos Alberto (a.k.a. ''BETO RENTERIA''), Carrera 26 No. 29–75, Tulua, Colombia; DOB 11 Mar 1945; POB Colombia; citizen Colombia; Cedula No. 6494208 (Colombia) (individual) [SDNT] (Linked To: DIMABE LTDA.; Linked To: COLOMBO ANDINA COMERCIAL COALSA LTDA.).

Dated: August 27, 2015.

Gregory T. Gatjanis,

Associate Director, Office of Global Targeting, Office of Foreign Assets Control.

[FR Doc. 2015–21660 Filed 9–1–15; 8:45 am]

BILLING CODE 4810–AL–P

DEPARTMENT OF THE TREASURY

Office of Foreign Assets Control

Additional Designations, Foreign Narcotics Kingpin Designation Act

AGENCY: Office of Foreign Assets Control, Treasury.

ACTION: Notice.

SUMMARY: The U.S. Department of the Treasury's Office of Foreign Assets Control (OFAC) is publishing the names of four individuals and two entities whose property and interests in property have been blocked pursuant to the Foreign Narcotics Kingpin Designation Act (Kingpin Act) (21 U.S.C. 1901–1908, 8 U.S.C. 1182).

DATES: The designation by the Acting Director of OFAC of the four individuals and two entities identified in this notice pursuant to section 805(b) of the Kingpin Act is effective on August 27, 2015.

FOR FURTHER INFORMATION CONTACT: Assistant Director, Sanctions Compliance & Evaluation, Office of Foreign Assets Control, U.S. Department of the Treasury, Washington, DC 20220, Tel: (202) 622–2490.

SUPPLEMENTARY INFORMATION:

Electronic and Facsimile Availability

This document and additional information concerning OFAC are available on OFAC's Web site at *http://www.treasury.gov/ofac* or via facsimile through a 24-hour fax-on-demand service at (202) 622–0077.

Background

The Kingpin Act became law on December 3, 1999. The Kingpin Act establishes a program targeting the activities of significant foreign narcotics traffickers and their organizations on a worldwide basis. It provides a statutory framework for the imposition of sanctions against significant foreign narcotics traffickers and their organizations on a worldwide basis, with the objective of denying their businesses and agents access to the U.S. financial system and the benefits of trade and transactions involving U.S. companies and individuals.

The Kingpin Act blocks all property and interests in property, subject to U.S. jurisdiction, owned or controlled by significant foreign narcotics traffickers as identified by the President. In addition, the Secretary of the Treasury, in consultation with the Attorney General, the Director of the Central Intelligence Agency, the Director of the Federal Bureau of Investigation, the Administrator of the Drug Enforcement Administration, the Secretary of Defense, the Secretary of State, and the Secretary of Homeland Security, may designate and block the property and interests in property, subject to U.S. jurisdiction, of persons who are found to be: (1) Materially assisting in, or providing financial or technological support for or to, or providing goods or services in support of, the international narcotics trafficking activities of a person designated pursuant to the Kingpin Act; (2) owned, controlled, or directed by, or acting for or on behalf of, a person designated pursuant to the Kingpin Act; or (3) playing a significant role in international narcotics trafficking.

On August 27, 2015, the Acting Director of OFAC designated the following four individuals and two entities whose property and interests in property are blocked pursuant to section 805(b) of the Kingpin Act.

Individuals

1. FONNEGRA ESPEJO, Adolfo, Zurich, Switzerland; Madrid, Spain; DOB 13 Feb 1962; POB Bogota, Colombia; citizen Colombia; Cedula No. 19462357 (Colombia); Passport AN971133 (Colombia) issued 03 Sep 2012 expires 03 Sep 2022 (individual) [SDNTK] (Linked To: ADOLFO FONNEGRA ESPEJO TRADING & INVESTMENT). Designated for materially assisting in, or providing financial or technological support for or to, or providing goods or services in support of, the international narcotics trafficking activities of Omar Arturo ZABALA PADILLA and/or Jose Vicente PENA PACHECO, and/or being owned, controlled, or directed by, or acting for or on behalf of, Omar Arturo ZABALA PADILLA and/or Jose Vicente PENA PACHECO.
2. GONZALEZ MEJIA, Cristian David (a.k.a. GONZALES MEJIA, Cristian), Basel, Switzerland; DOB 01 Aug 1987; POB Bogota, Colombia; citizen Colombia; Cedula No. 1126098461 (Colombia) (individual) [SDNTK]. Designated for materially assisting in, or providing financial or technological support for or to, or providing goods or services in support of, the international narcotics trafficking activities of Omar Arturo ZABALA PADILLA and/or Jose Vicente PENA PACHECO, and/or being owned, controlled, or directed by, or acting for or on behalf of, Omar Arturo ZABALA PADILLA and/or Jose Vicente PENA PACHECO.
3. GONZALEZ ZAMORANO, Ivan, Zurich, Switzerland; DOB 19 Jul 1983; POB Cali, Colombia; citizen Colombia; Cedula No. 14621505 (Colombia) (individual) [SDNTK]. Designated for materially assisting in, or providing financial or technological support for or to, or providing goods or services in support of, the international narcotics trafficking activities of Omar Arturo ZABALA PADILLA and/or Jose Vicente PENA PACHECO, and/or being owned, controlled, or directed by, or acting for or on behalf of, Omar Arturo ZABALA PADILLA and/or Jose Vicente PENA PACHECO.
4. PEÑA PACHECO, Jose Vicente (Latin: PEÑA PACHECO, Jose Vicente) (a.k.a. PENA PACHECO, Jose Vincente), Zurich, Switzerland; DOB 19 Jul 1968; POB Necocli, Antioquia, Colombia; citizen Colombia; Cedula No. 8188270 (Colombia); alt. Cedula No. 84497137 (Venezuela); Passport AG219114 (Colombia); alt. Passport AJ593373 (Colombia) (individual) [SDNTK] (Linked To: COLOMBIANO LATIN SHOP GMBH). Designated for materially assisting in, or providing financial or technological support for or to, or providing goods or services in support of, the international narcotics trafficking activities of the FARC and/or Omar Arturo ZABALA PADILLA, and/or being owned, controlled or directed by, or acting for or on behalf of, the FARC and/or Omar Arturo ZABALA PADILLA.

Entities

1. ADOLFO FONNEGRA ESPEJO TRADING & INVESTMENT, Badenerstrasse 791, Zurich 8048, Switzerland; Commercial Registry Number CH–020.1.066.499–9 (Switzerland); Company Number CHE–427.006.032 (Switzerland) [SDNTK]. Designated for being owned or controlled by Adolfo FONNEGRA ESPEJO.
2. COLOMBIANO LATIN SHOP GMBH, Dienerstrasse 72, Zurich 8004, Switzerland; Commercial Registry Number CH–020.4.053.829–6 (Switzerland); Company Number CHE–336.114.192 (Switzerland) [SDNTK]. Designated for materially assisting in, or providing financial or technological support for or to, or providing goods or services in support of, the international narcotics trafficking activities of the FARC, Omar Arturo ZABALA PADILLA, and/or Jose Vicente PENA PACHECO, and/or being owned or controlled by, or acting for or on behalf of, the FARC, Omar Arturo ZABALA PADILLA, and/or Jose Vicente PENA PACHECO.

Dated: August 27, 2015.

John E. Smith,

Acting Director, Office of Foreign Assets Control.

[FR Doc. 2015–21696 Filed 9–1–15; 8:45 am]

BILLING CODE 4810–AL–P

DEPARTMENT OF THE TREASURY

Office of Foreign Assets Control

Removal of Specially Designated Nationals and Blocked Persons Pursuant to the Cuban Assets Control Regulations

AGENCY: Office of Foreign Assets Control, Treasury.

ACTION: Notice.

SUMMARY: The Department of the Treasury's Office of Foreign Assets Control (OFAC) is publishing the name of 21 individuals, 36 entities, and three vessels whose names have been removed from the list of Specially Designated Nationals and Blocked Persons (SDN List) pursuant to the Cuban Assets Control Regulations, 31 CFR part 515.

DATES: The removal from the SDN List of the individuals, entities, and vessel identified in this notice is effective August 27, 2015.

FOR FURTHER INFORMATION CONTACT: Assistant Director, Sanctions Compliance & Evaluation, Department of the Treasury, Office of Foreign Assets Control, Washington, DC 20220, Tel: (202) 622–2490.

SUPPLEMENTARY INFORMATION:

Electronic and Facsimile Availability

The SDN List and additional information concerning OFAC are available from OFAC's Web site (*www.treas.gov/ofac*). Certain general information pertaining to OFAC's sanctions programs is available via facsimile through a 24-hour fax-on-demand service, tel.: 202/622–0077.

Background

On August 27, 2015, the Associate Director of OFAC removed from the SDN List the individuals, entities, and vessels listed below, whose names were included on the SDN List pursuant to the Cuban Assets Control Regulations:

Individuals

1. HAYA, Francisco, Panama (individual) [CUBA].
2. BATISTA, Miguel, Panama (individual) [CUBA].
3. CUENCA, Ramon Cesar, Panama (individual) [CUBA].
4. PEREZ, Alfonso, Panama (individual) [CUBA].
5. JIMINEZ SOLER, Gillermo, Panama (individual) [CUBA].
6. ROQUE PEREZ, Roberto, Panama (individual) [CUBA].
7. COLL PRADO, Gabriel, Panama (individual) [CUBA].
8. ECHEVERRI, German, Panama (individual) [CUBA].
9. ORTEGA PINA, Dario, Edificio Saldivar, Panama City, Panama (individual) [CUBA].
10. SANTAMARINA DE LA TORRE, Rafael Garcia (a.k.a. GARCIA SANTAMARINA DE LA TORRE, Alfredo Rafael), Panama (individual) [CUBA].
11. VASQUES, Oscar D. (a.k.a. VAZQUEZ, Oscar D.), Panama (individual) [CUBA].
12. DOOLEY, Michael P., Panama (individual) [CUBA].
13. MONTANEZ, Michael, Panama (individual) [CUBA].
14. PENA, Victor, Panama (individual) [CUBA].
15. ROMEO, Charles (a.k.a. ROMEO, Charles Henri Robert), Panama (individual) [CUBA].
16. DIAZ GONZALEZ, Rolando, Frankfurt, Germany (individual) [CUBA].
17. MADAN RIVAS, Jorge, Frankfurt, Germany (individual) [CUBA].
18. NAVARRO MARTINEZ, Samuel, Frankfurt, Germany (individual) [CUBA].
19. ROPERT, Miria Contreras (a.k.a. CONTRERAS, Miria), Paris, France (individual) [CUBA].
20. MEDINA, Ana Maria (a.k.a. MEDINA, Anita), Panama (individual) [CUBA].
21. PEREZ, Manuel Martin, Panama (individual) [CUBA].

Entities

1. RENT–A–CAR, S.A., Panama [CUBA].
2. TRANSIT, S.A., Panama [CUBA].
3. COMERCIAL MURALLA, S.A. (a.k.a. MURALLA, S.A.), Panama City, Panama [CUBA].
4. DESARROLLO DE PROYECTOS, S.A. (a.k.a. DEPROSA, S.A.), Panama City, Panama [CUBA].
5. INTERNATIONAL TRANSPORT CORPORATION, Colon Free Zone, Panama [CUBA].
6. PRESA, S.A., Panama [CUBA].
7. SUPLIDORA LATINO AMERICANA, S.A. (a.k.a. SUPLILAT, S.A.), Panama City, Panama [CUBA].
8. MOONEX INTERNATIONAL, S.A., Kingston, Jamaica; Panama [CUBA].
9. AEROTAXI EJECUTIVO, S.A., Managua, Nicaragua [CUBA].
10. LEYBDA CORPORATION, S.A., Panama [CUBA].
11. HAVINPEX, S.A. (a.k.a. TRANSOVER, S.A.), Panama City, Panama [CUBA].
12. MERCURIUS IMPORT/EXPORT COMPANY, PANAMA, S.A., Calle C, Edificio 18, Box 4048, Colon Free Zone, Panama [CUBA].
13. SERVIMPEX, S.A., Panama [CUBA].
14. MARKETING ASSOCIATES CORPORATION, Calle 52 E, Campo Alegre, Panama City, Panama [CUBA].
15. FACOBATA, Panama [CUBA].
16. GALLO IMPORT, Panama [CUBA].
17. GUACA EXPORT, Panama [CUBA].
18. INTERNATIONAL PETROLEUM, S.A. (a.k.a. IPESCO), Colon Free Zone, Panama [CUBA].
19. TRUST IMPORT–EXPORT, S.A., Panama [CUBA].
20. LICOREXPORT S.A., Quito, Ecuador [CUBA].
21. GEMEX AUSSENHANDELS GMBH, Hanauer Landstr. 126–128, Frankfurt am Main 1 D–6000, Germany [CUBA].
22. CONTEX, S.A., Panama [CUBA].
23. FRUNI TRADING CO., c/o MELFI MARINE CORPORATION S.A., Oficina 7, Edificio Senorial, Calle 50, Apartado 31, Panama City 5, Panama [CUBA].
24. LAKSHMI, Panama [CUBA].
25. BURGAN INTERNATIONAL, Kuwait [CUBA].
26. FABRO INVESTMENT, INC., Panama [CUBA].
27. PRIMA EXPORT/IMPORT, Jamaica [CUBA].
28. PROMOTORA ANDINA, S.A., Quito, Ecuador [CUBA].
29. CASA DEL REPUESTO, Panama City, Panama [CUBA].
30. COMPANIA FENIX INTERNACIONAL, S.A., Caracas, Venezuela [CUBA].
31. MONET TRADING COMPANY, Panama [CUBA].
32. TECHNIC HOLDING INC., Calle 34 No. 4–50, Office 301, Panama City, Panama [CUBA].
33. VIACON INTERNATIONAL, INC., Apartment 7B Torre Mar Building, Punta Paitilla Area, Panama City, Panama [CUBA].
34. VIACON INTERNATIONAL, INC., France Field, Colon Free Zone, Panama [CUBA].
35. IMPRISA, Spain [CUBA].
36. IMPRISA, S.A., Panama [CUBA].

Vessels

1. CELTIC (f.k.a. VIOLET ISLANDS) (C4WU) Bulk Carrier 27,652DWT 16,582GRT Cyprus flag (Atlantic Marie Shipping Co. Ltd.) (vessel) [CUBA].
2. CICLON Unknown vessel type (Senanque Shipping Co., Ltd., Cyprus) (vessel) [CUBA].
3. CRIOLLO (CL2257) Tug 181GRT Cuba flag (Samir de Navegacion S.A.) (vessel) [CUBA].

Dated: August 27, 2015.

Gregory T. Gatjanis,

Associate Director, Office of Global Targeting, Office of Foreign Assets Control.

[FR Doc. 2015–21659 Filed 9–1–15; 8:45 am]

BILLING CODE 4810–AL–P

DEPARTMENT OF THE TREASURY

Office of Foreign Assets Control

Unblocking of Specially Designated Nationals and Blocked Persons Pursuant to the Foreign Narcotics Kingpin Designation Act

AGENCY: Office of Foreign Assets Control, Treasury.

ACTION: Notice.

SUMMARY: The Department of the Treasury's Office of Foreign Assets Control (OFAC) is publishing the names of five individuals and three entities whose property and interests in property have been unblocked pursuant to the Foreign Narcotics Kingpin Designation Act (Kingpin Act) (21 U.S.C. 1901–1908, 8 U.S.C. 1182). Additionally, OFAC is publishing an update to the identifying information of one individual currently included in the list of Specially Designated Nationals and Blocked Persons (SDN List).

DATES: The unblocking and removal from the list of Specially Designated Nationals and Blocked Persons (SDN List) of the individuals and entities identified in this notice whose property and interests in property were blocked pursuant to the Kingpin Act, is effective on August 27, 2015. Additionally, the update to the SDN List of the identifying information of the individual identified in this notice is also effective on August 27, 2015.

FOR FURTHER INFORMATION CONTACT: Assistant Director, Sanctions Compliance & Evaluation, Department of the Treasury, Office of Foreign Assets Control, Washington, DC 20220, Tel: (202) 622–2420.

SUPPLEMENTARY INFORMATION:

Electronic and Facsimile Availability

This document and additional information concerning OFAC are available from OFAC's Web site at *www.treasury.gov/ofac* or via facsimile through a 24-hour fax-on demand service at (202) 622–0077.

Background

On December 3, 1999, the Kingpin Act was signed into law by the President of the United States. The Kingpin Act provides a statutory framework for the President to impose

sanctions against significant foreign narcotics traffickers and their organizations on a worldwide basis, with the objective of denying their businesses and agents access to the U.S. financial system and to the benefits of trade and transactions involving U.S. persons and entities.

The Kingpin Act blocks all property and interests in property, subject to U.S. jurisdiction, owned or controlled by significant foreign narcotics traffickers as identified by the President. In addition, the Secretary of the Treasury consults with the Attorney General, the Director of the Central Intelligence Agency, the Director of the Federal Bureau of Investigation, the Administrator of the Drug Enforcement Administration, the Secretary of Defense, the Secretary of State, and the Secretary of Homeland Security when designating and blocking the property or interests in property, subject to U.S. jurisdiction, of persons or entities found to be: (1) Materially assisting in, or providing financial or technological support for or to, or providing goods or services in support of, the international narcotics trafficking activities of a person designated pursuant to the Kingpin Act; (2) owned, controlled, or directed by, or acting for or on behalf of, a person designated pursuant to the Kingpin Act; and/or (3) playing a significant role in international narcotics trafficking.

On August 27, 2015, the Associate Director of the Office of Global Targeting removed from the SDN List the individuals and entities listed below, whose property and interests in property were blocked pursuant to the Kingpin Act:

Individuals

1. OICATA MORALES, Gelber Mauricio, c/o AGROVET EL REMANSO, Bogota, Colombia; DOB 29 Sep 1963; Cedula No. 74322694 (Colombia) (individual) [SDNTK].
2. REY REY, Blanca Lucy, c/o SERVICIOS TURISTICOS EL GALERON LLANERO LTDA., San Martin, Meta, Colombia; c/o SUCESORES DE HERNANDO SANCHEZ V S.C.S., Bogota, Colombia; Avenida 19 No. 118–30, Bogota, Colombia; Hacienda Santa Rosa, San Martin, Meta, Colombia; DOB 01 Jul 1953; Cedula No. 41616052 (Colombia) (individual) [SDNTK].
3. SANCHEZ REY, Alberto de Set, c/o SERVICIOS TURISTICOS EL GALERON LLANERO LTDA., San Martin, Meta, Colombia; c/o SUCESORES DE HERNANDO SANCHEZ V S.C.S., Bogota, Colombia; Avenida 19 No. 118–30 Of. 302, Bogota, Colombia; Hacienda Santa Rosa, San Martin, Meta, Colombia; DOB 01 Jan 1972; Cedula No. 79568901 (Colombia); Matricula Mercantil No. 1969885 (Colombia) (individual) [SDNTK].
4. SANCHEZ REY, Hernando, c/o SERVICIOS TURISTICOS EL GALERON LLANERO LTDA., San Martin, Meta, Colombia; c/o SUCESORES DE HERNANDO SANCHEZ V S.C.S., Bogota, Colombia; Avenida 19 No. 118–30 Of. 302, Bogota, Colombia; DOB 08 Jul 1974; Cedula No. 79626433 (Colombia); Matricula Mercantil No. 1738008 (Colombia) (individual) [SDNTK].
5. NUNEZ BEDOYA, Jose Antonio, Calle Lic. Benito Juarez No. 396, Interior No. 5, Colonia Centro, Culiacan, Sinaloa 80000, Mexico; DOB 21 Dec 1941; POB Sinaloa, Mexico; nationality Mexico; citizen Mexico; R.F.C. NUBA411221867 (Mexico); C.U.R.P. NUBA411221HSLXDN05 (Mexico) (individual) [SDNTK].

Entities

1. AGROVET EL REMANSO, Carrera 35A No. 17B–05 Sur, Bogota, Colombia; Carrera 86 Sur No. 24A–19 Bdg. 79 L–3, Bogota, Colombia; Matricula Mercantil No. 1095044 (Colombia) [SDNTK].
2. SUCESORES DE HERNANDO SANCHEZ V S.C.S., Avenida 19 No. 118–30 Ofc. 302, Bogota, Colombia; La Dorada, Caldas, Colombia; San Martin, Meta, Colombia; NIT # 860071634–3 (Colombia) [SDNTK].
3. SERVICIOS TURISTICOS EL GALERON LLANERO LTDA. (a.k.a. PARADOR TURISTICO Y HOTEL GALERON LLANERO), Avenida 19 No. 118–30 Ofc. 302, Bogota, Colombia; Calle 6 No. 17–99, San Martin, Meta, Colombia; NIT # 900025014–6 (Colombia) [SDNTK].

Additionally, on August 27, 2015, the Associate Director of the Office of Global Targeting updated the SDN record for the individual listed below, whose property and interests in property continue to be blocked pursuant to the Order:

Individual

1. SANCHEZ REY, German Gonzalo (a.k.a. ''COLETA''), Calle 41A No. 55–49, Bogota, Colombia; DOB 22 Feb 1973; POB Barrancabermeja, Santander, Colombia; Cedula No. 79625841 (Colombia) (individual) [SDNTK].

Dated: August 27, 2015.

Gregory T. Gatjanis,

Associate Director, Office of Global Targeting, Office of Foreign Assets Control.

[FR Doc. 2015–21662 Filed 9–1–15; 8:45 am]

BILLING CODE 4810–AL–P

DEPARTMENT OF THE TREASURY

Internal Revenue Service

Proposed Collection; Comment Request for Regulation Project

AGENCY: Internal Revenue Service (IRS), Treasury.

ACTION: Notice and request for comments.

SUMMARY: The Department of the Treasury, as part of its continuing effort to reduce paperwork and respondent burden, invites the general public and other Federal agencies to take this opportunity to comment on proposed and/or continuing information collections, as required by the Paperwork Reduction Act of 1995, Public Law 104–13(44 U.S.C. 3506(c)(2)(A)). Currently, the IRS is soliciting comments concerning timely mailing treated as timely filing.

DATES: Written comments should be received on or before November 2, 2015 to be assured of consideration.

ADDRESSES: Direct all written comments to Christie Preston, Internal Revenue Service, Room 6129, 1111 Constitution Avenue NW., Washington, DC 20224.

FOR FURTHER INFORMATION CONTACT: Requests for additional information or copies of the regulation should be directed to R. Joseph Durbala, at (202) 317–5746, or at Internal Revenue Service, Room 6129, 1111 Constitution Avenue NW., Washington, DC 20224, or through the internet at *RJoseph.Durbala@irs.gov.*

SUPPLEMENTARY INFORMATION:

Title: Timely Mailing Treated As Timely Filing.

OMB Number: 1545–1899.

Regulation Project Number: TD 9543 and RP 97–19.

Abstract: This information collection contains regulations amending a Treasury Regulation to provide guidance as to the only ways to establish prima facie evidence of delivery of documents that have a filing deadline prescribed by the internal revenue laws, absent direct proof of actual delivery. The regulations are necessary to provide greater certainty on this issue and to provide specific guidance. The regulations affect taxpayers who mail Federal tax documents to the Internal Revenue Service or the United States Tax Court. Procedure 97–19 provides the criteria that will be used by the IRS to determine whether a private delivery service qualifies as a designated Private Delivery Service under section 7502 of the Internal Revenue Code.

Current Actions: As currently cleared the separate reporting of burden under different approval numbers (1545–1535 and 1545–1899), may prove to be misleading and is in need of clarification. The combining of the requirements under one approval number (1545–1899) is intended to clarify any misunderstanding.

Type of Review: Revision of a currently approved collection.

Affected Public: Individuals or households, business or other for-profit organizations, not-for-profit institutions, farms, federal government and state, local, or tribal government.

The estimated burden related to RP 97–19:

Estimated Number of Respondents: 5.

Estimated Time per Respondent: 613 hours 48 minutes.

Estimated Total Annual Burden Hours: 3,069.

The estimated related to TD 9543:

Estimated Number of Respondents: 10,847,647.

Estimated Time per Respondent: 6 minutes.

Estimated Total Annual Burden Hours: 1,084,765.

The following paragraph applies to all of the collections of information covered by this notice:

An agency may not conduct or sponsor, and a person is not required to respond to, a collection of information unless the collection of information displays a valid OMB control number. Books or records relating to a collection of information must be retained as long as their contents may become material in the administration of any internal revenue law. Generally, tax returns and tax return information are confidential, as required by 26 U.S.C. 6103.

Request for Comments: Comments submitted in response to this notice will be summarized and/or included in the request for OMB approval. All comments will become a matter of public record. Comments are invited on: (a) Whether the collection of information is necessary for the proper performance of the functions of the agency, including whether the information shall have practical utility; (b) the accuracy of the agency's estimate of the burden of the collection of information; (c) ways to enhance the quality, utility, and clarity of the information to be collected; (d) ways to minimize the burden of the collection of information on respondents, including through the use of automated collection techniques or other forms of information technology; and (e) estimates of capital or start-up costs and costs of operation, maintenance, and purchase of services to provide information.

Approved: August 21, 2015.

R. Joseph Durbala,

IRS, Tax Analyst.

[FR Doc. 2015–21762 Filed 9–1–15; 8:45 am]

BILLING CODE 4830–01–P

DEPARTMENT OF THE TREASURY

Internal Revenue Service

Art Advisory Panel; Notice of Closed Meeting

AGENCY: Internal Revenue Service, Treasury.

ACTION: Notice of closed meeting of Art Advisory Panel.

SUMMARY: Closed meeting of the Art Advisory Panel will be held in Washington, DC.

DATES: The meeting will be held September 17, 2015.

ADDRESSES: The closed meeting of the Art Advisory Panel will be held at 999 North Capitol Street NE., Washington, DC 20003.

FOR FURTHER INFORMATION CONTACT: Maricarmen Cuello, AP:SO:AAS, 51 SW. 1st Avenue, Room 1014, Miami, Florida 33130. Telephone (305) 982–5364 (not a toll free number).

SUPPLEMENTARY INFORMATION: Notice is hereby given pursuant to section 10(a)(2) of the Federal Advisory Committee Act, 5 U.S.C. App., that a closed meeting of the Art Advisory Panel will be held at 999 North Capitol Street NE., Washington, DC 20003. The agenda will consist of the review and evaluation of the acceptability of fair market value appraisals of works of art involved in Federal income, estate, or gift tax returns. This will involve the discussion of material in individual tax returns made confidential by the provisions of 26 U.S.C. 6103. A determination as required by section 10(d) of the Federal Advisory Committee Act has been made that this meeting is concerned with matters listed in subsections (c)(3), (4), (6), and (7) of the Government in the Sunshine Act, 5 U.S.C. 552b, and that the meeting will not be open to the public.

Nikole Flax,

Acting Deputy Chief, Appeals.

[FR Doc. 2015–21745 Filed 9–1–15; 8:45 am]

BILLING CODE 4830–01–P

DEPARTMENT OF THE TREASURY

Internal Revenue Service

Proposed Collection; Comment Request for Form 1120–POL

AGENCY: Internal Revenue Service (IRS), Treasury.

ACTION: Notice and request for comments.

SUMMARY: The Department of the Treasury, as part of its continuing effort to reduce paperwork and respondent burden, invites the general public and other Federal agencies to take this opportunity to comment on proposed and/or continuing information collections, as required by the Paperwork Reduction Act of 1995, Public Law 104–13(44 U.S.C. 3506(c)(2)(A)). Currently, the IRS is soliciting comments concerning Form 1120–POL, U.S. Income Tax Return for Certain Political Organizations.

DATES: Written comments should be received on or before November 2, 2015 to be assured of consideration.

ADDRESSES: Direct all written comments to Christie Preston, Internal Revenue Service, Room 6129, 1111 Constitution Avenue NW., Washington, DC 20224.

FOR FURTHER INFORMATION CONTACT: Requests for additional information or copies of the form and instructions should be directed to R. Joseph Durbala at Internal Revenue Service, Room 6129, 1111 Constitution Avenue NW., Washington, DC 20224, or at (202) 317–5746, or through the internet at *RJoseph.Durbala@irs.gov.*

SUPPLEMENTARY INFORMATION:

Title: U.S. Income Tax Return for Certain Political Organizations.

OMB Number: 1545–0129.

Form Number: 1120–POL.

Abstract: Certain political organizations file Form 1120–POL to report the tax imposed by Internal Revenue Code section 527. The form is used to designate a principal business campaign committee that is subject to a lower rate of tax under Code section 527(h). IRS uses Form 1120–POL to determine if the proper tax was paid.

Current Actions: There are no changes being made to the form at this time.

Type of Review: Extension of a currently approved collection.

Affected Public: Not-for-profit institutions.

Estimated Number of Respondents: 6,527.

Estimated Time per Respondent: 36 hours., 38 min.

Estimated Total Annual Burden Hours: 239,150.

The following paragraph applies to all of the collections of information covered by this notice:

An agency may not conduct or sponsor, and a person is not required to respond to, a collection of information unless the collection of information displays a valid OMB control number. Books or records relating to a collection of information must be retained as long as their contents may become material in the administration of any internal revenue law. Generally, tax returns and tax return information are confidential, as required by 26 U.S.C. 6103.

Request for Comments: Comments submitted in response to this notice will be summarized and/or included in the request for OMB approval. All comments will become a matter of public record. Comments are invited on: (a) Whether the collection of information is necessary for the proper performance of the functions of the agency, including whether the information shall have practical utility; (b) the accuracy of the agency's estimate of the burden of the collection of information; (c) ways to enhance the quality, utility, and clarity of the information to be collected; (d) ways to minimize the burden of the collection of information on respondents, including through the use of automated collection techniques or other forms of information technology; and (e) estimates of capital or start-up costs and costs of operation, maintenance, and purchase of services to provide information.

Approved: August 21, 2015.

R. Joseph Durbala,

IRS Tax Analyst.

[FR Doc. 2015–21761 Filed 9–1–15; 8:45 am]

BILLING CODE 4830–01–P

DEPARTMENT OF THE TREASURY

Internal Revenue Service

Proposed Collection; Comment Request for Information Collection Tools

AGENCY: Internal Revenue Service (IRS), Treasury.

ACTION: Notice and request for comments.

SUMMARY: The Department of the Treasury, as part of its continuing effort to reduce paperwork and respondent burden, invites the general public and other Federal agencies to take this opportunity to comment on proposed and/or continuing information collections, as required by the Paperwork Reduction Act of 1995, Public Law 104–13 (44 U.S.C. 3506(c)(2)(A)). Currently, the IRS is soliciting comments concerning Form 944–SS, Employer's ANNUAL Federal Tax Return (American Samoa, Guam, the Northern Mariana Islands, and the U.S. Virgin Islands, and Form 944–PR, Planilla para la Declaracion ANNUAL de la Cotribucion Federal del Patrono.

DATES: Written comments should be received on or before November 2, 2015 to be assured of consideration.

ADDRESSES: Direct all written comments to Christie Preston, Internal Revenue Service, Room 6129, 1111 Constitution Avenue NW., Washington, DC 20224.

FOR FURTHER INFORMATION CONTACT: Requests for additional information or copies of the collection tools should be directed to R. Joseph Durbala, Internal Revenue Service, Room 6129, 1111 Constitution Avenue NW., Washington, DC 20224, or at (202)317–5746, or through the internet at *RJoseph.Durbala@irs.gov.*

SUPPLEMENTARY INFORMATION: Currently, the IRS is seeking comments concerning the following information collection tools, reporting, and record-keeping requirements:

Title: Employer's ANNUAL Federal Tax Return (American Samoa, Guam, the Northern Mariana Islands, and the U.S. Virgin Islands and Form 944–PR, Planilla para la Declaracion ANNUAL de la Cotribucion Federal del Patrono.

OMB Number: 1545–2010.

Form Number: Form 944–SS and Form 944–PR.

Abstract: Form 944–SS and Form 944–PR are designed so the smallest employers (those whose annual liability for social security and Medicare taxes is $1,000 or less) will have to file and pay these taxes only once a year instead of every quarter.

Current Actions: There are no changes being made to the revenue procedure at this time.

Type of Review: Extension of a currently approved collection.

Affected Public: Business or other for-profit organizations, and Farms.

Estimated Number of Respondents: 20,000.

Estimated Time per Respondent: 9 hrs., 34 min.

Estimated Total Annual Reporting Burden hours: 191,200.

The following paragraph applies to all of the collections of information covered by this notice:

An agency may not conduct or sponsor, and a person is not required to respond to, a collection of information unless the collection of information displays a valid OMB control number. Books or records relating to a collection of information must be retained as long as their contents may become material in the administration of any internal revenue law. Generally, tax returns and tax return information are confidential, as required by 26 U.S.C. 6103.

Request for Comments: Comments submitted in response to this notice will be summarized and/or included in the request for OMB approval. All comments will become a matter of public record. Comments are invited on: (a) Whether the collection of information is necessary for the proper performance of the functions of the agency, including whether the information shall have practical utility; (b) the accuracy of the agency's estimate of the burden of the collection of information; (c) ways to enhance the quality, utility, and clarity of the information to be collected; (d) ways to minimize the burden of the collection of information on respondents, including through the use of automated collection techniques or other forms of information technology; and (e) estimates of capital or start-up costs and costs of operation, maintenance, and purchase of services to provide information.

Approved: August 26, 2015.

R. Joseph Durbala,

IRS Tax Analyst.

[FR Doc. 2015–21757 Filed 9–1–15; 8:45 am]

BILLING CODE 4830–01–P

DEPARTMENT OF THE TREASURY

Internal Revenue Service

Proposed Collection; Comment Request for Regulation Project

AGENCY: Internal Revenue Service (IRS), Treasury.

ACTION: Notice and request for comments.

SUMMARY: The Department of the Treasury, as part of its continuing effort to reduce paperwork and respondent burden, invites the general public and other Federal agencies to take this opportunity to comment on proposed and/or continuing information collections, as required by the Paperwork Reduction Act of 1995, Public Law 104–13 (44 U.S.C. 3506(c)(2)(A)). The IRS is soliciting comments concerning information collection requirements related to guidance under section 1502; suspension of losses on certain stock disposition.

DATES: Written comments should be received on or before November 2, 2015 to be assured of consideration.

ADDRESSES: Direct all written comments to Christie Preston, Internal Revenue Service, Room 6129, 1111 Constitution Avenue NW., Washington, DC 20224.

FOR FURTHER INFORMATION CONTACT: Requests for additional information or copies of regulations should be directed to Sara Covington, at Internal Revenue Service, room 6129, 1111 Constitution Avenue NW., Washington, DC 20224, or through the Internet, at *Sara.L.Covington@irs.gov.*

SUPPLEMENTARY INFORMATION:

Title: Guidance Under Section 1502; Suspension of Losses on Certain Stock Disposition.

OMB Number: 1545–1828.

Regulation Project Number: T.D. 9048

Abstract: This document contains final and temporary regulations under section 1502 that redetermine the basis of stock of a subsidiary member of a consolidated group immediately prior to certain transfers of such stock and certain deconsolidation's of a subsidiary member. In addition, this document contains temporary regulations that suspend certain losses recognized on the disposition of stock of a subsidiary member. The regulations apply to corporations filing consolidated returns.

Current Actions: There is no change to these existing regulations.

Type of Review: Extension of a currently approved collection.

Affected Public: Business or other for-profit organizations.

Estimated Number of Respondents: 7,500.

Estimated Time per Respondent: 2 hours.

Estimated Total Annual Burden Hours: 15,000.

The following paragraph applies to all of the collections of information covered by this notice:

An agency may not conduct or sponsor, and a person is not required to respond to, a collection of information unless the collection of information displays a valid OMB control number. Books or records relating to a collection of information must be retained as long as their contents may become material in the administration of any internal revenue law. Generally, tax returns and tax return information are confidential, as required by 26 U.S.C. 6103.

Request for Comments: Comments submitted in response to this notice will be summarized and/or included in the request for OMB approval. All comments will become a matter of public record. Comments are invited on: (a) Whether the collection of information is necessary for the proper performance of the functions of the agency, including whether the information shall have practical utility; (b) the accuracy of the agency's estimate of the burden of the collection of information; (c) ways to enhance the quality, utility, and clarity of the information to be collected; (d) ways to minimize the burden of the collection of information on respondents, including through the use of automated collection techniques or other forms of information technology; and (e) estimates of capital or start-up costs and costs of operation, maintenance, and purchase of services to provide information.

Approved: August 20, 2015.

Sara Covington,

IRS Tax Analyst.

[FR Doc. 2015–21677 Filed 9–1–15; 8:45 am]

BILLING CODE 4830–01–P

DEPARTMENT OF THE TREASURY

Internal Revenue Service

Proposed Collection; Comment Request for Disclosure of Returns and Return Information to Designee of Taxpayer

AGENCY: Internal Revenue Service (IRS), Treasury.

ACTION: Notice and request for comments.

SUMMARY: This final regulation relates to the disclosure of returns and return information to a designee of the taxpayer. The regulations provide guidance to IRS employees responsible for disclosing returns and return information and to taxpayers who wish to designate a person or persons to whom returns and return information may be disclosed.

Currently, the IRS is soliciting comments concerning the disclosure of returns and return information to a designee of a taxpayer.

DATES: Written comments should be received on or before November 2, 2015 to be assured of consideration.

ADDRESSES: Direct all written comments to Christie Preston, Internal Revenue Service, Room 6129, 1111 Constitution Avenue NW., Washington, DC 20224.

FOR FURTHER INFORMATION CONTACT: Requests for additional information or copies of this regulation should be directed to Joseph Durbala at Internal Revenue Service, Room 6129, 1111 Constitution Avenue NW., Washington, DC 20224, or at (202)317–5746, or through the Internet at *RJoseph.Durbala@irs.gov.*

SUPPLEMENTARY INFORMATION:

Title: Disclosure of Returns and Return Information to Designee of Taxpayer.

OMB Number: 1545–1816.

Regulation Project Number: TD 9054, as amended by TD 9618.

Abstract: Under section 6103(a), returns and return information are confidential unless disclosure is otherwise authorized by the Code. Section 6103(c), as amended in 1996 by section 1207 of the Taxpayer Bill of Rights II, Public Law 104–168 (110 Stat. 1452), authorizes the IRS to disclose returns and return information to such person or persons as the taxpayer may designate in a request for or consent to disclosure, or to any other person at the taxpayer's request to the extent necessary to comply with a request for information or assistance made by the taxpayer to such other person. Disclosure is permitted subject to such requirements and conditions as may be prescribed by regulations. With the amendment in 1996, Congress eliminated the longstanding requirement that disclosures to designees of the taxpayer must be pursuant to the written request or consent of the taxpayer.

Current Actions: There is no change to this final regulation.

Type of Review: Extension of currently approved collection.

Affected Public: Individuals or households, business or other not-for-profit institutions, farms, and Federal, state, local or tribal governments.

Estimated Number of Respondents: 4,000.

Estimated Time per Respondent: 12 minutes.

Estimated Total Annual Burden Hours: 800.

The following paragraph applies to all of the collections of information covered by this notice:

An agency may not conduct or sponsor, and a person is not required to respond to, a collection of information unless the collection of information displays a valid OMB control number. Books or records relating to a collection of information must be retained as long as their contents may become material in the administration of any internal revenue law. Generally, tax returns and tax return information are confidential, as required by 26 U.S.C. 6103.

Request for Comments: Comments submitted in response to this notice will be summarized and/or included in the request for OMB approval. All comments will become a matter of public record. Comments are invited on: (a) Whether the collection of information is necessary for the proper performance of the functions of the agency, including whether the information shall have practical utility; (b) the accuracy of the agency's estimate of the burden of the collection of information; (c) ways to enhance the quality, utility, and clarity of the information to be collected; (d) ways to minimize the burden of the collection of information on respondents, including through the use of automated collection techniques or other forms of information technology; and (e) estimates of capital or start-up costs and costs of operation, maintenance, and purchase of services to provide information.

Approved: August 25, 2015.

R. Joseph Durbala,

IRS Tax Analyst.

[FR Doc. 2015–21755 Filed 9–1–15; 8:45 am]

BILLING CODE 4830–01–P

DEPARTMENT OF THE TREASURY

Internal Revenue Service

Proposed Collection; Comment Request for Form 1120–FSC and Schedule P (Form 1120–FSC)

AGENCY: Internal Revenue Service (IRS), Treasury.

ACTION: Notice and request for comments.

SUMMARY: The Department of the Treasury, as part of its continuing effort to reduce paperwork and respondent burden, invites the general public and other Federal agencies to take this opportunity to comment on proposed and/or continuing information collections, as required by the Paperwork Reduction Act of 1995, Public Law 104–13 (44 U.S.C. 3506(c)(2)(A)). Currently, the IRS is soliciting comments concerning Form 1120–FSC, U.S. Income Tax Return of a Foreign Sales Corporation, and Schedule P (Form 1120–FSC), Transfer Price or Commission.

DATES: Written comments should be received on or before November 2, 2015 to be assured of consideration.

ADDRESSES: Direct all written comments to Christie Preston, Internal Revenue Service, Room 6129, 1111 Constitution Avenue NW., Washington, DC 20224.

FOR FURTHER INFORMATION CONTACT: Requests for additional information or copies of the form and instructions should be directed to R. Joseph Durbala, (202) 317–5746, at Internal Revenue Service, Room 6129, 1111 Constitution Avenue NW., Washington, DC 20224, or through the internet at *RJoseph.Durbala@irs.gov.*

SUPPLEMENTARY INFORMATION:

Title: Form 1120–FSC, U.S. Income Tax Return of a Foreign Sales Corporation, and Schedule P (Form 1120–FSC), Transfer Price or Commission.

OMB Number: 1545–0935.

Form Number: 1120–FSC and Schedule P (Form 1120–FSC).

Abstract: Form 1120–FSC is filed by foreign corporations that have elected to be FSCs or small FSCs. The FSC uses Form 1120–FSC to report income and expenses and to figure its tax liability. IRS uses Form 1120–FSC and Schedule P (Form 1120–FSC) to determine whether the FSC has correctly reported its income and expenses and figured its tax liability correctly.

Current Actions: There are no changes being made to the form at this time.

Type of Review: Revision of a currently approved collection.

Affected Public: Business or other for-profit organizations.

Estimated Number of Respondents: 30,000.

Estimated Time per Respondent: 165 hours, 37 minutes.

Estimated Total Annual Burden Hours: 1,088,250.

The following paragraph applies to all of the collections of information covered by this notice:

An agency may not conduct or sponsor, and a person is not required to respond to, a collection of information unless the collection of information displays a valid OMB control number. Books or records relating to a collection of information must be retained as long as their contents may become material in the administration of any internal revenue law. Generally, tax returns and tax return information are confidential, as required by 26 U.S.C. 6103.

Request for Comments: Comments submitted in response to this notice will be summarized and/or included in the request for OMB approval. All comments will become a matter of public record. Comments are invited on: (a) Whether the collection of information is necessary for the proper performance of the functions of the agency, including whether the information shall have practical utility; (b) the accuracy of the agency's estimate of the burden of the collection of information; (c) ways to enhance the quality, utility, and clarity of the information to be collected; (d) ways to minimize the burden of the collection of information on respondents, including through the use of automated collection techniques or other forms of information technology; and (e) estimates of capital or start-up costs and costs of operation, maintenance, and purchase of services to provide information.

Approved: August 21, 2015.

R. Joseph Durbala,

IRS Tax Analyst.

[FR Doc. 2015–21760 Filed 9–1–15; 8:45 am]

BILLING CODE 4830–01–P

DEPARTMENT OF THE TREASURY

Internal Revenue Service

Proposed Collection; Comment Request for Notice 2009–41

AGENCY: Internal Revenue Service (IRS), Treasury.

ACTION: Notice and request for comments.

SUMMARY: The Department of the Treasury, as part of its continuing effort to reduce paperwork and respondent burden, invites the general public and other Federal agencies to take this opportunity to comment on proposed and/or continuing information collections, as required by the Paperwork Reduction Act of 1995, Public Law 104–13 (44 U.S.C. 3506(c)(2)(A)). Currently, the IRS is soliciting comments concerning Notice 2009–41, Credit for Residential Energy Efficient Property.

DATES: Written comments should be received on or before November 2, 2015 to be assured of consideration.

ADDRESSES: Direct all written comments to Christie Preston, Internal Revenue Service, Room 6129, 1111 Constitution Avenue NW., Washington, DC 20224.

FOR FURTHER INFORMATION CONTACT: Requests for additional information or copies of the form and instructions should be directed to Allan Hopkins, at Internal Revenue Service, Room 6129, 1111 Constitution Avenue NW., Washington, DC 20224, or through the internet at *Allan.M.Hopkins@irs.gov.*

SUPPLEMENTARY INFORMATION:

Title: Credit for Residential Energy Efficient Property.

OMB Number: 1545–2134.

Form Number: Notice 2009–41.

Abstract: This notice sets forth interim guidance, pending the issuance of regulations, relating to the credit for residential energy efficient property under § 25D of the Internal Revenue Code. Specifically, this notice provides procedures that manufacturers may follow to certify property as a qualified residential energy efficient property, as well as guidance regarding the conditions under which taxpayers seeking to claim the § 25D credit may rely on a manufacturer's certification. The Internal Revenue Service (Service) and the Treasury Department expect that the regulations will incorporate the rules set forth in this notice.

Current Actions: There is no change in the paperwork burden previously approved by OMB. This form is being submitted for renewal purposes only.

Type of Review: Extension of a currently approved collection.

Affected Public: Individuals, Businesses and other for-profit organizations.

Estimated Number of Respondents: 140.

Estimated Time per Respondent: 2 Hours, 30 minutes.

Estimated Total Annual Burden Hours: 350.

The following paragraph applies to all of the collections of information covered by this notice:

An agency may not conduct or sponsor, and a person is not required to respond to, a collection of information unless the collection of information displays a valid OMB control number.

Books or records relating to a collection of information must be retained as long as their contents may become material in the administration of any internal revenue law. Generally, tax returns and tax return information are confidential, as required by 26 U.S.C. 6103.

Request for Comments: Comments submitted in response to this notice will be summarized and/or included in the request for OMB approval. All comments will become a matter of public record. Comments are invited on: (a) Whether the collection of information is necessary for the proper performance of the functions of the agency, including whether the information shall have practical utility; (b) the accuracy of the agency's estimate of the burden of the collection of information; (c) ways to enhance the quality, utility, and clarity of the information to be collected; (d) ways to minimize the burden of the collection of information on respondents, including through the use of automated collection techniques or other forms of information technology; and (e) estimates of capital or start-up costs and costs of operation, maintenance, and purchase of services to provide information.

Approved: August 19, 2015.

Allan Hopkins,

Tax Analyst.

[FR Doc. 2015–21758 Filed 9–1–15; 8:45 am]

BILLING CODE 4830–01–P

DEPARTMENT OF THE TREASURY

Internal Revenue Service

Proposed Collection; Comment Request for Form 8288–B

AGENCY: Internal Revenue Service (IRS), Treasury.

ACTION: Notice and request for comments.

SUMMARY: The Department of the Treasury, as part of its continuing effort to reduce paperwork and respondent burden, invites the general public and other Federal agencies to take this opportunity to comment on proposed and/or continuing information collections, as required by the Paperwork Reduction Act of 1995, Public Law 104–13 (44 U.S.C. 3506(c)(2)(A)). Currently, the IRS is soliciting comments concerning Form 8288–B, Application for Withholding Certificate for Dispositions by Foreign Persons of U.S. Real Property Interests.

DATES: Written comments should be received on or before November 2, 2015 to be assured of consideration.

ADDRESSES: Direct all written comments to Christie Preston, Internal Revenue Service, Room 6129, 1111 Constitution Avenue NW., Washington, DC 20224.

FOR FURTHER INFORMATION CONTACT: Requests for additional information or copies of the collection tools should be directed to R. Joseph Durbala, Internal Revenue Service, Room 6129, 1111 Constitution Avenue NW., Washington, DC 20224, or at (202) 317–5746, or through the internet at *RJoseph.Durbala@irs.gov.*

SUPPLEMENTARY INFORMATION: Currently, the IRS is seeking comments concerning the following information collection tools, reporting, and record-keeping requirements.

Title: Application for Withholding Certificate for Dispositions by Foreign Persons of U.S. Property Interests.

OMB Number: 1545–1060.

Form Number: 8288–B.

Abstract: Section 1445 of the Internal Revenue Code requires transferees to withhold tax on the amount realized from sales or other dispositions by foreign persons of U.S. real property interests. Code sections 1445(b) and (c) allow the withholding to be reduced or eliminated under certain circumstances. Form 8288–B is used to apply for a withholding certificate from IRS to reduce or eliminate the withholding required by Code section 1445.

Current Actions: There is no change in the paperwork burden previously approved by OMB.

Type of Review: Extension of a currently approved collection.

Affected Public: Business or other for-profit organizations and individuals or households.

Estimated Number of Respondents: 5,079.

Estimated Time per Respondent: 5 hrs., 46 min.

Estimated Total Annual Burden Hours: 29,256.

The following paragraph applies to all of the collections of information covered by this notice:

An agency may not conduct or sponsor, and a person is not required to respond to, a collection of information unless the collection of information displays a valid OMB control number. Books or records relating to a collection of information must be retained as long as their contents may become material in the administration of any internal revenue law. Generally, tax returns and tax return information are confidential, as required by 26 U.S.C. 6103.

Request for Comments: Comments submitted in response to this notice will be summarized and/or included in the request for OMB approval. All comments will become a matter of public record. Comments are invited on: (a) Whether the collection of information is necessary for the proper performance of the functions of the agency, including whether the information shall have practical utility; (b) the accuracy of the agency's estimate of the burden of the collection of information; (c) ways to enhance the quality, utility, and clarity of the information to be collected; (d) ways to minimize the burden of the collection of information on respondents, including through the use of automated collection techniques or other forms of information technology; and (e) estimates of capital or start-up costs and costs of operation, maintenance, and purchase of services to provide information.

Approved: August 24, 2015.

R. Joseph Durbala,

IRS Tax Analyst.

[FR Doc. 2015–21754 Filed 9–1–15; 8:45 am]

BILLING CODE 4830–01–P

Reader Aids

Federal Register

Vol. 80, No. 170

Wednesday, September 2, 2015

CUSTOMER SERVICE AND INFORMATION

Federal Register/Code of Federal Regulations	
General Information, indexes and other finding aids	**202–741–6000**
Laws	**741–6000**
Presidential Documents	
Executive orders and proclamations	**741–6000**
The United States Government Manual	**741–6000**
Other Services	
Electronic and on-line services (voice)	**741–6020**
Privacy Act Compilation	**741–6064**
Public Laws Update Service (numbers, dates, etc.)	**741–6043**

ELECTRONIC RESEARCH

World Wide Web

Full text of the daily Federal Register, CFR and other publications is located at: **www.fdsys.gov.**

Federal Register information and research tools, including Public Inspection List, indexes, and Code of Federal Regulations are located at: **www.ofr.gov.**

E-mail

FEDREGTOC-L (Federal Register Table of Contents LISTSERV) is an open e-mail service that provides subscribers with a digital form of the Federal Register Table of Contents. The digital form of the Federal Register Table of Contents includes HTML and PDF links to the full text of each document.

To join or leave, go to **http://listserv.access.gpo.gov** and select *Online mailing list archives, FEDREGTOC-L, Join or leave the list (or change settings);* then follow the instructions.

PENS (Public Law Electronic Notification Service) is an e-mail service that notifies subscribers of recently enacted laws.

To subscribe, go to **http://listserv.gsa.gov/archives/publaws-l.html** and select *Join or leave the list (or change settings);* then follow the instructions.

FEDREGTOC-L and **PENS** are mailing lists only. We cannot respond to specific inquiries.

Reference questions. Send questions and comments about the Federal Register system to: **fedreg.info@nara.gov**

The Federal Register staff cannot interpret specific documents or regulations.

CFR Checklist. Effective January 1, 2009, the CFR Checklist no longer appears in the Federal Register. This information can be found online at **http://bookstore.gpo.gov/.**

FEDERAL REGISTER PAGES AND DATE, SEPTEMBER

52605–52934 1
52935–53234 2

CFR PARTS AFFECTED DURING SEPTEMBER

At the end of each month the Office of the Federal Register publishes separately a List of CFR Sections Affected (LSA), which lists parts and sections affected by documents published since the revision date of each title.

5 CFR
1653 52605

6 CFR
Proposed Rules:
5 53019

7 CFR
1784 52606
Proposed Rules:
51 53021
504 53021
989 53022

10 CFR
Proposed Rules:
429 52676
430 52850
431 52676

14 CFR
25 52615
39 ..... 52935, 52937, 52939, 52941, 52946, 52948, 52953, 52955
Proposed Rules:
39 ..... 53024, 53028, 53030
91 53033

15 CFR
730 52959
732 52959
734 52959
736 52959
738 52959
740 ..... 52959, 52962
742 52959
743 52959
744 ..... 52959, 52963
746 52959
747 52959
748 52959
750 52959
752 52959
754 52959
756 52959
758 52959
760 52959
762 52959
764 52959
766 52959
768 52959
770 52959
772 52959
774 52959

16 CFR
Proposed Rules:
1211 53036

19 CFR
207 52617

24 CFR
982 52619

26 CFR
1 ..... 52972, 52976
Proposed Rules:
1 ..... 52678, 53058, 53068

28 CFR
2 52982

30 CFR
7 52984
18 52984
44 52984
46 52984
48 52984
49 52984
56 52984
57 52984
70 52984
71 52984
72 52984
74 52984
75 52984
90 52984
Proposed Rules:
75 53070

31 CFR
Proposed Rules:
Ch. X 52680

33 CFR
100 ..... 52620, 52993, 52996, 52999
117 ..... 52622, 52999, 53000
165 ..... 52622, 52625

40 CFR
9 53000
52 ..... 52627, 52630, 53001
721 53000
Proposed Rules:
52 ..... 52701, 52710, 53086

42 CFR
Proposed Rules:
413 53087

44 CFR
64 52633
67 53007

46 CFR
503 ..... 52637, 52638

47 CFR
43 52641
Proposed Rules:
0 52714

1 52714
2 52714
15 ....52714, 52715
18 52714
54 53088
73 52715
74 52715

48 CFR

1842 52642
1852 52642

49 CFR

591 53011
592 53011

50 CFR

20 ....52645, 52663
648 53015
660 53015
679 52673

Proposed Rules:

17 52717
660 53088

LIST OF PUBLIC LAWS

Note: No public bills which have become law were received by the Office of the Federal Register for inclusion in today's **List of Public Laws**.

Last List August 11, 2015

Public Laws Electronic Notification Service (PENS)

PENS is a free electronic mail notification service of newly enacted public laws. To subscribe, go to *http://listserv.gsa.gov/archives/publaws-l.html*

Note: This service is strictly for E-mail notification of new laws. The text of laws is not available through this service. **PENS** cannot respond to specific inquiries sent to this address.