AUTHENTICATED
U.S. GOVERNMENT
INFORMATION
GPO

FEDERAL REGISTER

Vol. 81 Thursday,
No. 47 March 10, 2016

Pages 12573–12794

OFFICE OF THE FEDERAL REGISTER

The **FEDERAL REGISTER** (ISSN 0097–6326) is published daily, Monday through Friday, except official holidays, by the Office of the Federal Register, National Archives and Records Administration, Washington, DC 20408, under the Federal Register Act (44 U.S.C. Ch. 15) and the regulations of the Administrative Committee of the Federal Register (1 CFR Ch. I). The Superintendent of Documents, U.S. Government Publishing Office, Washington, DC 20402 is the exclusive distributor of the official edition. Periodicals postage is paid at Washington, DC.

The **FEDERAL REGISTER** provides a uniform system for making available to the public regulations and legal notices issued by Federal agencies. These include Presidential proclamations and Executive Orders, Federal agency documents having general applicability and legal effect, documents required to be published by act of Congress, and other Federal agency documents of public interest.

Documents are on file for public inspection in the Office of the Federal Register the day before they are published, unless the issuing agency requests earlier filing. For a list of documents currently on file for public inspection, see *www.ofr.gov.*

The seal of the National Archives and Records Administration authenticates the Federal Register as the official serial publication established under the Federal Register Act. Under 44 U.S.C. 1507, the contents of the **Federal Register** shall be judicially noticed.

The **Federal Register** is published in paper and on 24x microfiche. It is also available online at no charge at *www.fdsys.gov*, a service of the U.S. Government Publishing Office.

The online edition of the **Federal Register** is issued under the authority of the Administrative Committee of the Federal Register as the official legal equivalent of the paper and microfiche editions (44 U.S.C. 4101 and 1 CFR 5.10). It is updated by 6:00 a.m. each day the **Federal Register** is published and includes both text and graphics from Volume 59, 1 (January 2, 1994) forward. For more information, contact the GPO Customer Contact Center, U.S. Government Publishing Office. Phone 202-512-1800 or 866-512-1800 (toll free). E-mail, *gpocusthelp.com.*

The annual subscription price for the **Federal Register** paper edition is $749 plus postage, or $808, plus postage, for a combined **Federal Register, Federal Register** Index and List of CFR Sections Affected (LSA) subscription; the microfiche edition of the **Federal Register** including the **Federal Register** Index and LSA is $165, plus postage. Six month subscriptions are available for one-half the annual rate. The prevailing postal rates will be applied to orders according to the delivery method requested. The price of a single copy of the daily **Federal Register,** including postage, is based on the number of pages: $11 for an issue containing less than 200 pages; $22 for an issue containing 200 to 400 pages; and $33 for an issue containing more than 400 pages. Single issues of the microfiche edition may be purchased for $3 per copy, including postage. Remit check or money order, made payable to the Superintendent of Documents, or charge to your GPO Deposit Account, VISA, MasterCard, American Express, or Discover. Mail to: U.S. Government Publishing Office—New Orders, P.O. Box 979050, St. Louis, MO 63197-9000; or call toll free 1-866-512-1800, DC area 202-512-1800; or go to the U.S. Government Online Bookstore site, see *bookstore.gpo.gov.*

There are no restrictions on the republication of material appearing in the **Federal Register.**

How To Cite This Publication: Use the volume number and the page number. Example: 81 FR 12345.

Postmaster: Send address changes to the Superintendent of Documents, Federal Register, U.S. Government Publishing Office, Washington, DC 20402, along with the entire mailing label from the last issue received.

SUBSCRIPTIONS AND COPIES

PUBLIC

Subscriptions:

Paper or fiche	**202–512–1800**
Assistance with public subscriptions	**202–512–1806**
General online information	**202–512–1530; 1–888–293–6498**

Single copies/back copies:

Paper or fiche	**202–512–1800**
Assistance with public single copies	**1–866–512–1800 (Toll-Free)**

FEDERAL AGENCIES

Subscriptions:

Assistance with Federal agency subscriptions:

Email	*FRSubscriptions@nara.gov*
Phone	**202–741–6000**

Printed on recycled paper.

Contents

Federal Register

Vol. 81, No. 47

Thursday, March 10, 2016

Agricultural Marketing Service
PROPOSED RULES
Grapes Grown in a Designated Area of Southeastern California; Increased Assessment Rate, 12605–12607
NOTICES
Guidance:
National List Petition Guidelines, 12680–12681

Agriculture Department
See Agricultural Marketing Service
See Animal and Plant Health Inspection Service
See Commodity Credit Corporation
See Food and Nutrition Service
See Forest Service

Animal and Plant Health Inspection Service
NOTICES
Agency Information Collection Activities; Proposals, Submissions, and Approvals:
Importation of Fresh Bananas from the Philippines into the Continental United States, 12682–12683
Importation of Sand Pears from China, 12681–12682

Army Department
NOTICES
Agency Information Collection Activities; Proposals, Submissions, and Approvals, 12721–12722

Centers for Disease Control and Prevention
NOTICES
Agency Information Collection Activities; Proposals, Submissions, and Approvals, 12732–12733

Centers for Medicare & Medicaid Services
RULES
Eligibility in the States, District of Columbia, the Northern Mariana Islands, and American Samoa; CFR Correction, 12599

Children and Families Administration
NOTICES
Agency Information Collection Activities; Proposals, Submissions, and Approvals, 12733–12734

Coast Guard
RULES
Safety Zones:
Upper Mississippi River 321.4 to 321.6, Quincy, IL, 12588–12590

Commerce Department
See Economics and Statistics Administration
See International Trade Administration
See National Oceanic and Atmospheric Administration
NOTICES
Agency Information Collection Activities; Proposals, Submissions, and Approvals, 12686–12687

Committee for Purchase From People Who Are Blind or Severely Disabled
NOTICES
Appointments to Performance Review Board for Senior Executive Service, 12718–12719

Commodity Credit Corporation
RULES
Conservation Stewardship Program, 12573–12583

Comptroller of the Currency
NOTICES
Meetings:
Minority Depository Institutions Advisory Committee, 12782

Consumer Product Safety Commission
RULES
Statement of Enforcement Policy:
General Conformity Certificates for Adult Wearing Apparel Exempt from Testing, 12587–12588

Corporation for National and Community Service
RULES
Change of Address, 12599–12601
NOTICES
Agency Information Collection Activities; Proposals, Submissions, and Approvals, 12719–12720

Council of the Inspectors General on Integrity and Efficiency
NOTICES
No FEAR Act Notice, 12720–12721

Defense Department
See Army Department
See Navy Department
NOTICES
Meetings:
Uniform Formulary Beneficiary Advisory Panel, 12722

Economics and Statistics Administration
NOTICES
Meetings:
Commerce Data Advisory Council, 12687

Education Department
PROPOSED RULES
Priorities, Requirements, Definitions, and Selection Criteria:
Fulbright-Hays Group Projects Abroad Program—Short-Term Projects and Long-Term Projects, 12622–12626

Employment and Training Administration
NOTICES
Revised Schedule of Remuneration for the Unemployment Compensation for Ex-Servicemembers Program, 12748

Energy Department
See Federal Energy Regulatory Commission

Environmental Protection Agency
RULES
Air Quality State Implementation Plans; Approvals and Promulgations:
New Mexico and Albuquerque/Bernalillo County; Revisions to Establish Small Business Stationary Source Technical and Environmental Compliance Assistance Programs, 12595–12599

Ohio; Base Year Emission Inventories for the 2008 8-Hour Ozone Standard, 12591–12595
PROPOSED RULES
Air Quality State Implementation Plans; Approvals and Promulgations:
California—South Coast Air Quality Management District; Control of Oxides of Nitrogen Emissions from Off-Road Diesel Vehicles, 12637–12641
New Mexico and Albuquerque/Bernalillo County; Revisions to Establish Small Business Stationary Source Technical and Environmental Compliance Assistance Programs, 12637
Ohio; Base Year Emission Inventories for the 2008 8-Hour Ozone Standard, 12626–12627
Tennessee; Infrastructure Requirements for the 2010 Sulfur Dioxide National Ambient Air Quality Standard, 12627–12636
NOTICES
Agency Information Collection Activities; Proposals, Submissions, and Approvals, 12730–12731
Integrated Risk Information System Draft Assessments:
Hexahydro-1,3,5-trinitro-1,3,5-triazine, 12727–12728
Requests for Nominations:
National Environmental Education Advisory Council, 12728–12729
Technical Support Document:
Recommended Estimates for Missing Water Quality Parameters for Application in EPA's Biotic Ligand Model, 12729–12730

Federal Aviation Administration
RULES
Airworthiness Directives:
Rolls-Royce plc Turbojet Engines, 12585–12587
Turbomeca S.A. Turboshaft Engines, 12583–12585
NOTICES
Meetings:
RTCA Special Committee Non-Rechargeable Lithium Batteries, 12778
RTCA Special Committee Portable Electronic Devices, 12778–12779
Petitions for Exemptions; Summaries:
AGERpoint, Inc., 12777–12778
Amazon.com, 12777
Iowa State University of Science and Technology, 12779
Unmanned Services, Inc., 12779–12780

Federal Election Commission
NOTICES
Meetings; Sunshine Act, 12731

Federal Energy Regulatory Commission
NOTICES
Applications:
S.D. Warren, 12724–12725
Whitestone Power and Communications, 12723–12724
Combined Filings, 12725–12727
Meetings:
Implementation Issues Under the Public Utility Regulatory Policies Act; Technical Conference, 12726

Federal Motor Carrier Safety Administration
PROPOSED RULES
Evaluation of Safety Sensitive Personnel for Moderate-to-Severe Obstructive Sleep Apnea, 12642–12647

Federal Railroad Administration
PROPOSED RULES
Evaluation of Safety Sensitive Personnel for Moderate-to-Severe Obstructive Sleep Apnea, 12642–12647

Federal Reserve System
NOTICES
Changes in Bank Control:
Acquisitions of Shares of a Bank or Bank Holding Company, 12731

Financial Crimes Enforcement Network
PROPOSED RULES
Bank Secrecy Act Regulations:
Reports of Foreign Financial Accounts, 12613–12622

Fish and Wildlife Service
RULES
Subsistence Management Regulations for Public Lands in Alaska; Rural Determinations, Nonrural List, 12590–12591
NOTICES
Meetings:
Trinity River Adaptive Management Working Group, 12745

Food and Drug Administration
PROPOSED RULES
Medical Devices:
Orthopedic Devices; Classification of Posterior Cervical Screw Systems, 12607–12613
NOTICES
Agency Information Collection Activities; Proposals, Submissions, and Approvals:
Guidance for Industry and Staff on Dear Health Care Provider Letters—Improving Communication of Important Safety Information, 12734–12735
Guidance—Emergency Use Authorization of Medical Products, 12739–12741
Investigational Device Exemptions Reports and Records, 12735–12737
Center for Devices and Radiological Health—Experiential Learning Program, 12737–12739
Regulatory Review Periods for Patent Extensions:
OPSUMIT, 12741–12742

Food and Nutrition Service
NOTICES
Agency Information Collection Activities; Proposals, Submissions, and Approvals:
National School Lunch Program, 12683–12684
Study of WIC Food Package Costs and Cost Containment, 12684–12685

Forest Service
RULES
Subsistence Management Regulations for Public Lands in Alaska; Rural Determinations, Nonrural List, 12590–12591

General Services Administration
NOTICES
Agency Information Collection Activities; Proposals, Submissions, and Approvals:
Modifications, 12731–12732

Health and Human Services Department
See Centers for Disease Control and Prevention

See Centers for Medicare & Medicaid Services
See Children and Families Administration
See Food and Drug Administration
See National Institutes of Health

Homeland Security Department
See Coast Guard

Housing and Urban Development Department
PROPOSED RULES
Strengthening Oversight of Over-Income Tenancy in Public Housing Advance; Reopening of Comment Period, 12613

Indian Affairs Bureau
NOTICES
Environmental Assessments; Availability, etc.:
Aiya Solar Project, Clark County, NV, 12746
Indian Gaming:
Extension of Tribal-State Class III Gaming Compact—Rosebud Sioux Tribe and the State of South Dakota, 12746–12747

Interior Department
See Fish and Wildlife Service
See Indian Affairs Bureau
See Land Management Bureau

Internal Revenue Service
NOTICES
Agency Information Collection Activities; Proposals, Submissions, and Approvals:
Form 14157 and Form 14157–A, 12782–12783
Revenue Procedure 97–33, 12783–12784
Subchapter S Subsidiaries, 12783

International Trade Administration
NOTICES
Antidumping or Countervailing Duty Investigations, Orders, or Reviews:
Certain Frozen Warmwater Shrimp from India, 12705–12711
Certain Frozen Warmwater Shrimp from Thailand, 12696–12701
Certain Frozen Warmwater Shrimp from the Socialist Republic of Vietnam, 12702–12705
Certain Iron Mechanical Transfer Drive Components from Canada and the People's Republic of China, 12687–12688
Certain Pasta from Italy, 12690–12691
Certain Preserved Mushrooms from the People's Republic of China, 12692–12694
Oil Country Tubular Goods from Turkey, 12691–12692
Stainless Steel Bar from India, 12694–12696
Uncovered Innerspring Units from the People's Republic of China, 12688–12690
Less Than Fair Value Investigations:
Stainless Steel Sheet and Strip from the People's Republic of China, 12711–12716
Renewable Energy Trade Mission to Mexico, 12694
Requests for Nominations:
Applicants for Appointment to the United States Section of the United States-Turkey Business Council, 12701–12702

Judicial Conference of the United States
NOTICES
Meetings:
Advisory Committee on Rules of Criminal Procedure, 12747
Advisory Committee on Rules of Evidence, 12747–12748

Labor Department
See Employment and Training Administration

Land Management Bureau
NOTICES
Filing of Plats of Survey:
North Dakota, 12747

National Credit Union Administration
NOTICES
Privacy Act; Systems of Records, 12748–12750

National Highway Traffic Safety Administration
PROPOSED RULES
Federal Motor Vehicle Safety Standards:
Electric-Powered Vehicles; Electrolyte Spillage and Electrical Shock Protection, 12647–12676
NOTICES
Buy America Waivers, 12780–12781

National Institutes of Health
NOTICES
Agency Information Collection Activities; Proposals, Submissions, and Approvals:
NEXT Generation Health Study, 12744–12745
Meetings:
Center for Scientific Review, 12743–12744
National Cancer Institute, 12743
National Institute of Neurological Disorders and Stroke, 12742–12743

National Oceanic and Atmospheric Administration
RULES
Atlantic Highly Migratory Species:
Commercial Blacktip Sharks, Aggregated Large Coastal Sharks, and Hammerhead Sharks in the western Gulf of Mexico Sub-Region, 12602–12604
Fisheries of the Caribbean, Gulf of Mexico, and South Atlantic:
Atlantic Migratory Group Cobia; Recreational Accountability Measure and Closure, 12601–12602
PROPOSED RULES
Fisheries off West Coast States:
Pacific Coast Groundfish Fishery; 2016 Tribal Fishery for Pacific Whiting, 12676–12679
NOTICES
Agency Information Collection Activities; Proposals, Submissions, and Approvals:
NOAA's Teacher at Sea Program, 12717–12718
Meetings:
Fisheries of the South Atlantic; South Atlantic Fishery Management Council—Snapper Grouper Advisory Panel, 12717
Sanctuary System Business Advisory Council, 12718
National Estuarine Research Reserve System, 12716–12717

National Science Foundation
NOTICES
Meetings:
Advisory Committee for Education and Human Resources, 12750

Navy Department
NOTICES
Environmental Impact Statements; Availability, etc.:
Military Readiness Activities at the Fallon Training Range Complex, Nevada, 12723
Meetings:
Board of Advisors to The President of the Naval War College Subcommittee, 12723

Nuclear Regulatory Commission
NOTICES
License Amendment Applications:
Virgil C. Summer Nuclear Station, Units 2 and 3, 12751–12754

Personnel Management Office
NOTICES
Agency Information Collection Activities; Proposals, Submissions, and Approvals:
Combined Federal Campaign Charity Applications, 12754–12756
Meetings:
Hispanic Council on Federal Employment, 12755

Postal Regulatory Commission
NOTICES
New Postal Products, 12756–12757

Postal Service
NOTICES
New Postal Products, 12757

Presidential Documents
PROCLAMATIONS
Special Observances:
Death of Nancy Davis Reagan (Proc. 9405), 12787–12789
ADMINISTRATIVE ORDERS
Iran; Continuation of National Emergency (Notice of March 9, 2016), 12791–12794

Securities and Exchange Commission
NOTICES
Agency Information Collection Activities; Proposals, Submissions, and Approvals, 12761–12762
Meetings; Sunshine Act, 12764
Self-Regulatory Organizations; Proposed Rule Changes:
Chicago Board Options Exchange, Inc., 12764–12769
EDGA Exchange, Inc., 12759–12761
EDGX Exchange, Inc., 12757–12759
ISE Mercury, LLC, 12770–12775
NASDAQ PHLX, LLC, 12769–12770
NYSE Arca, Inc., 12775–12776
NYSE MKT, LLC, 12762–12764

State Department
NOTICES
Culturally Significant Objects Imported for Exhibition:
Agnes Martin Exhibition, 12776
Designations as a Foreign Terrorist Organization:
Palestine Liberation Front and Other Aliases, 12776–12777

Transportation Department
See Federal Aviation Administration
See Federal Motor Carrier Safety Administration
See Federal Railroad Administration
See National Highway Traffic Safety Administration
NOTICES
Draft National Freight Strategic Plan:
Deadline for Submitting Comments, 12781–12782

Treasury Department
See Comptroller of the Currency
See Financial Crimes Enforcement Network
See Internal Revenue Service
NOTICES
Agency Information Collection Activities; Proposals, Submissions, and Approvals, 12784–12785

Veterans Affairs Department
PROPOSED RULES
Recognition of Tribal Organizations for Representation of VA Claimants, 12626

Separate Parts In This Issue

Part II
Presidential Documents, 12787–12789

Part III
Presidential Documents, 12791–12794

Reader Aids

Consult the Reader Aids section at the end of this issue for phone numbers, online resources, finding aids, and notice of recently enacted public laws.

To subscribe to the Federal Register Table of Contents LISTSERV electronic mailing list, go to http://listserv.access.gpo.gov and select Online mailing list archives, FEDREGTOC-L, Join or leave the list (or change settings); then follow the instructions.

CFR PARTS AFFECTED IN THIS ISSUE

A cumulative list of the parts affected this month can be found in the Reader Aids section at the end of this issue.

3 CFR

Proclamations:

9405 12789

Administrative Orders:

Notices:

Notice of March 9, 2016 12793

7 CFR

1470 12573

Proposed Rules:

925 12605

14 CFR

39 (2 documents) 12583, 12585

16 CFR

1610 12587

21 CFR

Proposed Rules:

888 12607

24 CFR

Proposed Rules:

960 12613

31 CFR

Proposed Rules:

1010 12613

33 CFR

165 12588

34 CFR

Proposed Rules:

Ch. VI 12622

36 CFR

242 12590

38 CFR

Proposed Rules:

14 12625

40 CFR

52 (2 documents) 12591, 12595

Proposed Rules:

52 (4 documents) 12626, 12627, 12636, 12637

42 CFR

435 12599

45 CFR

1201 12599
2505 12599
2507 12599
2508 12599

49 CFR

Proposed Rules:

240 12642
242 12642
391 12642
571 12647

50 CFR

100 12590
622 12601
635 12602

Proposed Rules:

660 12676

Rules and Regulations

Federal Register
Vol. 81, No. 47
Thursday, March 10, 2016

This section of the FEDERAL REGISTER contains regulatory documents having general applicability and legal effect, most of which are keyed to and codified in the Code of Federal Regulations, which is published under 50 titles pursuant to 44 U.S.C. 1510.

The Code of Federal Regulations is sold by the Superintendent of Documents. Prices of new books are listed in the first FEDERAL REGISTER issue of each week.

DEPARTMENT OF AGRICULTURE

Commodity Credit Corporation

7 CFR Part 1470

[Docket No. NRCS–2014–0008]

RIN 0578–AA63

Conservation Stewardship Program

AGENCY: Natural Resources Conservation Service (NRCS) and the Commodity Credit Corporation (CCC), United States Department of Agriculture (USDA).

ACTION: Final rule.

SUMMARY: NRCS published an interim rule, with request for comments, on November 5, 2014, to implement changes to the Conservation Stewardship Program (CSP) that were either necessitated by enactment of the Agricultural Act of 2014 (2014 Act) or required to implement administrative streamlining improvements and clarifications. NRCS received 483 comments from 227 respondents to the interim rule. In this document, NRCS issues a final rule to make permanent those changes, respond to comments, and to make further adjustments in response to some of the comments received.

DATES: *Effective date:* This rule is effective March 10, 2016.

FOR FURTHER INFORMATION CONTACT: Mark Rose, Director, Financial Assistance Programs Division, U.S. Department of Agriculture, Natural Resources Conservation Service, Post Office Box 2890, Washington, DC 20013–2890; telephone: (202) 720–1845; fax: (202) 720–4265.

SUPPLEMENTARY INFORMATION:

Background

The Food, Conservation, and Energy Act of 2008 (2008 Act) amended the Food Security Act of 1985 (1985 Act) to establish CSP and authorize the program from fiscal year 2009 through fiscal year 2012. CSP replaced the Conservation Security Program. The program was extended through fiscal year 2014 by the Consolidated and Further Continuing Appropriations Act, 2012. The 2014 Act revised CSP and reauthorized it through fiscal year 2018.

The purpose of CSP is to encourage producers to address priority resource concerns and improve their conservation performance by installing and adopting additional conservation activities and improving, maintaining, and managing existing conservation activities on eligible land. The Secretary of Agriculture delegated authority through the Under Secretary for Natural Resources and the Environment to the NRCS Chief to administer CSP.

Through CSP, NRCS provides financial and technical assistance to eligible producers to conserve and enhance soil, water, air, and related natural resources on their land. Eligible lands include private or Tribal cropland, grassland, pastureland, rangeland, nonindustrial private forest lands, and other land in agricultural areas (including cropped woodland, marshes, agricultural land, or land capable of being used for the production of livestock) on which resource concerns related to agricultural production could be addressed. Participation in the program is voluntary.

CSP encourages land stewards to improve their conservation performance by installing and adopting additional activities and improving, maintaining, and managing existing activities on eligible land. NRCS makes funding for CSP available nationwide on a continuous application basis.

On November 5, 2014, NRCS published an interim final rule with request for comments in the **Federal Register** (79 FR 65835) that amended CSP regulations at 7 CFR part 1470 to implement changes made by the 2014 Act. The statutory changes made to CSP regulations by the interim rule included:

- Limiting eligible land to that in production for at least 4 of the 6 years preceding February 7, 2014, the date of enactment of the 2014 Act.
- Requiring contract offers to meet stewardship threshold for at least two priority resource concerns, as defined in § 1470.3, and meet or exceed one additional priority resource concern by the end of the stewardship contract.
- Allowing enrollment of lands that are protected by an agricultural land easement under the newly-authorized Agricultural Conservation Easement Program (ACEP).
- Allowing enrollment of lands that are in the last year of the Conservation Reserve Program (CRP).
- Allowing contracts to be renewed if the threshold for two additional priority resource concerns will be met or the stewardship threshold will be exceeded for two existing priority resource concerns.
- Requiring that at least five priority resource concerns be identified for each area or watershed.
- Requiring NRCS to establish a science-based stewardship threshold for each priority resource concern.
- Authorizing NRCS to prorate conservation performance so that a participant may receive equal annual payments to the greatest extent practicable.
- Emphasizing conservation activities to be implemented across the agricultural operation.
- Authorizing supplemental payment for improving a resource conserving crop rotation.
- Authorizing an annual enrollment of 10,000,000 acres, rather than an enrollment of 12,769,000 acres as was authorized by the 2008 Act.
- Establishing CSP as a covered program authorized to accomplish the purposes of Regional Conservation Partnership Program.
- Removing the acreage cap for non-industrial private forestland (NIPF).
- Authorizing veteran preference.

NRCS also made programmatic changes including the following:

- Clarifying how CSP contract limits are applied when there is a change of the legal framework for an agricultural operation. Contract limitations applied at the time of enrollment will not change, regardless of successor-in-interest. This is not a change in policy, but is a change in how the policy is implemented starting with contracts obligated in 2014.
- Establishing a maximum number of applicable priority resource concerns (APRC) selected by the State. The maximum number of APRC must equal the minimum requirements from the 2014 Act. States will select five APRC for a geographic area.

• Prioritizing applications from eligible veterans competing in beginning farmer or rancher, or socially disadvantaged farmer or rancher funding pools. Eligible veteran applications in these pools will be set to high priority and funded first.

• Clarifying applicant eligibility requirements to ensure all applicants in a contract application meet all eligibility requirements.

In addition to making the statutory and programmatic changes described above, NRCS made internal policy adjustments to improve the management and implementation of CSP. These policy changes included:

• Removing the requirement for State Conservationists to obtain concurrence at the national level to approve contract modifications greater than $5,000. The State Conservationist may approve legitimate contract increases to implement an appeal determination or correct an error.

• Re-delegating the requirement for State Conservationists to obtain an annual payment limitation waiver when a payment was not made in the year it was scheduled for reasons beyond participant control. The waiver was previously approved by the Chief and is now delegated to the Deputy Chief for Programs.

• Integrating Landscape Conservation Initiatives in CSP. A pilot is being conducted in sign-up 2015–1 to target conservation objectives that have regional or national significance at the landscape scale. The pilot includes the Sage Grouse Initiative, Lesser Prairie Chicken Initiative, Ogallala Aquifer Initiative, and Longleaf Pine Initiative.

• Requiring reporting for conservation activities and incorporating reporting requirements into the State Conservationist's performance plan to encourage a more uniform distribution of funds and acres across the country. This also helps with the collection of implementation data of activities applied on the landscape.

• Incorporating interim guidance provided via the internal NRCS directives system, including renewal guidance and memorandum to clarify the process for evaluating operational changes to determine if they conform to renewal eligibility provisions. Specifically, for land in a renewal offer to be eligible, participants are required to continue implementing their demonstrated and documented management system, including prior or comparable conservation activities from the initial contracts.

NRCS originally solicited comments on the interim final rule for 60 days ending January 5, 2015. Due to the comment period occurring through the end of the calendar year, NRCS extended the comment period until January 20, 2015. NRCS received 227 timely submitted responses to the rule, constituting 483 comments. The topics that generated the greatest response were on contract limits, payments, and ranking. Overall, the commenters supported the changes made by the interim rule. This final rule responds to the comments received by the public comment deadline and makes one programmatic change based upon such comments. Specifically, NRCS is changing the minimum contract payment available under § 1470.24(c).

Summary of CSP Comments

In this preamble, the comments have been organized in alphabetic order by topic. The topics include administration, agricultural operation, allocation of funds, beginning farmers and ranchers, conservation activities, conservation compliance, the conservation management tool (CMT), CRP expiring contracts, contract limits, cropland conversion, eligibility, enhancement and enhancement options, environmental credits, fairness, modifications, outreach, payments, producers, ranking, renewals, State Technical Committees, and stewardship thresholds. Additionally, NRCS received 25 comments that were general in nature. These comments were not addressed as they were outside the scope of the changes that NRCS made in the interim rule. Most of these general comments expressed support for the program or how the program has benefitted particular operations. NRCS also received five comments which criticized the program as wasteful government spending or expressed that CSP funding should be redirected to other conservation efforts.

Administration

Comment: NRCS received ten comments that made recommendations related to the overall administration of the program. These comments included concerns that CSP participants may be held to a rigid requirement to decide what exactly will be planted on each field for the next 5 years, and that there are several factors that influence what farmers will grow, including commodity prices and yield data. To address this concern, some respondents recommended reducing CSP contracts from 5 years to 3 years.

NRCS Response: By statute, CSP contracts are for a duration of 5 years, and participants are required to maintain and improve the level of stewardship on their agricultural operations over the term of the contract. However, NRCS has incorporated more flexibility into program implementation by allowing land use conversions, changes in rotations, and substitution of enhancements where such substitution will result in the same or greater stewardship of the enrolled land. Therefore, while NRCS documents current management activities on the agricultural operation at the time of enrollment, the participant has flexibility to make adjustments to their management system while remaining in compliance with their CSP contract. The respondents' recommendations did not affect any of the regulatory provisions and therefore no changes were made.

Agricultural Operation

Comment: NRCS received one comment requesting that NRCS apply the ''substantially separate provision'' more consistently.

NRCS Response: NRCS defined ''agricultural operation'' in the CSP interim rule, consistent with statutory parameters, as all eligible land, as determined by NRCS, whether contiguous or noncontiguous that is ''[u]nder the effective control of a producer at the time of enrollment in the program; and [o]perated by the producer with equipment, labor, management, and production or cultivation practices that are *substantially separate* (emphasis added) from other agricultural operations.'' NRCS applies a ''majority test'' to determine whether an applicant operation is substantially separate. In particular, if three of the following four factors are different between the operations, then the operation is considered ''substantially separate'': Labor, equipment, management, and productive or cultivation practices. NRCS describes each of these factors, including providing several examples, in its manual [1] to help guide NRCS field employees when assisting applicants to complete the agricultural operation delineation. NRCS will continue to provide training and quality assurance reviews to ensure that the substantially separate operation determinations are made consistently. No changes were made to the CSP regulation in response to this recommendation.

Allocation of Funds

Comment: NRCS received eight comments concerning the allocation of funds under the program. One respondent recommended that CSP

[1] The CSP Manual, 440 Conservation Programs Manual Part 508, can be accessed at *http://directives.sc.egov.usda.gov/.*

funds be allocated to purchase rental conservation equipment to be managed by the local USDA Service Center for use by small farmers. NRCS also received several comments that, since NIPF acres are ecologically vital, these lands should not be subject to disproportionate cuts if payment cuts are required.

NRCS Response: NRCS' authority under CSP is to provide technical and financial assistance to program participants to maintain existing conservation activities and to adopt new conservation activities to address priority resource concerns. NRCS does not have authority under CSP to purchase equipment for use by non-Federal personnel, or to rent such equipment to others. NRCS recognizes the environmental benefits of forestry lands and will not subject NIPF to disproportionate cuts if payment cuts that are within the control of NRCS are required due to the availability of funds. No changes were made to the CSP regulation in response to these comments.

Beginning Farmers and Ranchers

Comment: NRCS received 53 comments requesting that NRCS increase the acreage goal for beginning farmers and ranchers allocated to the program. Most recommended that the goal be increased from 5 percent to 15 percent.

NRCS Response: Since 2009, the Chief has been instructed by statute at section 1241(h) of the 1985 Act to use, to the maximum extent practicable, 5 percent of total CSP acreage for socially disadvantaged farmers and ranchers and 5 percent of total CSP acreage for beginning farmers and ranchers. Section 2604 of the 2014 Act extended the special set asides to fiscal year 2018. The CSP regulation incorporated these statutory requirements at 7 CFR 1470.4(c) and 1470.20(f)(3). The regulation provides the Chief flexibility to determine whether to raise the acreage goals beyond the 5 percent. NRCS will consider these comments and historic participation data when determining acreage goal levels for each signup period.

NRCS analyzed program enrollment data from fiscal year 2010 to fiscal year 2013 to determine if enrolled acres with beginning farmers and ranchers or socially disadvantaged farmers and ranchers exceeded the 5 percent nationally, and whether NRCS should consider allocating more acres to these two groups. The analysis revealed that setting aside 5 percent of the acres for designated pools for beginning farmers and ranchers, and socially disadvantaged farmers and ranchers is not limiting participation of these groups. Participation by these groups exceeded the 5 percent minimum. Although applicants that qualify under these groups compete separately in designated ranking pools within each geographic area of the State, they can submit their applications in the general ranking pools. Five hundred forty of the 4,151 contracts for beginning farmers and ranchers and 123 of the 1,338 contracts for socially disadvantaged farmers and ranchers were evaluated in the general ranking pools. Overall, these contracts comprise 12.2 percent of contracts from all sign-ups, even though they did not all compete in the designated pools.

While the statute establishes a minimum set-aside of acres for beginning farmers and ranchers and for socially disadvantaged farmers and ranchers, NRCS believes that its outreach efforts can expand the participation by these two groups of producers beyond current participation rates. Therefore, NRCS is establishing a policy goal to expand enrollment by beginning farmers and ranchers and socially disadvantaged farmers and ranchers in all ranking pools, and will also allocate additional acres to the two set-aside ranking pools as needed to address program demand amongst these producers.

No changes were made to the CSP regulation in response to this recommendation.

Conservation Activities

Comment: NRCS received seven comments related to the topic of conservation activities. These comments included recommendations that energy audits qualify as an enhancement, NRCS staff receive additional training on the issue of soil health, wildlife enhancements address predation pressures, enhancements to expand native prairie grass be promoted, and that NRCS only fund conservation activities that are shown to have an environmental benefit. NRCS also received a comment expressing concern that enhancement bundles provide an unfair advantage to larger operations because larger operations have greater ability to adopt entire bundles; therefore, such bundles should not receive priority consideration for funding.

NRCS Response: NRCS considers internal and external customers' recommendations regarding new or modified enhancements that may be needed to address priority resource concerns at the local level through local work groups and at the State level through State Technical Committees. NRCS State Conservationists seek input on these recommendations from the State Technical Committee members and other program stakeholders. While the recommendations above do not affect any of the regulatory provisions, NRCS will consider these recommendations when evaluating new enhancements that will be offered in future signups. As to the comment about enhancement bundles, NRCS believes it is appropriate to provide greater priority for the adoption of enhancement bundles due to the greater environmental benefit created when enhancements are implemented together. NRCS will review the available enhancement bundles to ensure that there are sufficient options applicable to smaller operations. No changes to the CSP regulation were made in response to these comments.

Conservation Compliance

Comment: NRCS received two comments related to the requirement that CSP participants must comply with the highly erodible land conservation and wetland conservation provisions at 7 CFR part 12, referred to in the comments as ''cross-compliance.'' These respondents expressed concern that cross compliance has not been enforced, creating concerns with visible erosion and waterways that are not functioning as intended.

NRCS Response: CSP, like other Title XII conservation programs, is subject to the conservation compliance requirements under 7 CFR part 12. NRCS verifies conservation compliance before awarding a contract as part of the minimum program requirements and during the contract term through mandatory annual contract reviews, 5 percent spot checks, and 10 percent random reviews which requires field visits for compliance purposes. NRCS will continue to provide training to ensure proper contract management and implementation is exercised at all times. No changes to the CSP regulation were made in response to these comments.

CMT

Comment: NRCS received four comments related to CMT. Three respondents recommended the continued use of CMT, but suggest making it more transparent and accessible, including having a version of CMT available to producers to run alternative scenarios for themselves prior to applying for program benefits. The other respondent identified that the performance values used in CMT to determine payments do not translate to adequate compensation for expenses to

implement additional activities, and thus the valuation process utilizing CMT is not preferred.

NRCS Response: The 2014 Act removed reference to CMT in the CSP statute. While the removal of references to CMT does not preclude utilizing CMT in CSP implementation, NRCS now has the flexibility to explore other methods for evaluating CSP applications for funding. NRCS has convened a team to explore other, more transparent, methods for making eligibility, ranking, and payment determinations that do not rely solely, or at all, upon the use of CMT. Since NRCS removed references to the CMT in the CSP interim rule, no changes are needed to CSP regulations in response to these comments.

CRP Expiring Contracts

Comment: NRCS received two comments related to expiring CRP contracts. These comments recommend that NRCS increase coordination with the Farm Service Agency (FSA) to ensure a seamless transition from CRP back to agricultural production, including the adoption of policies that encourage retaining the conservation cover that had been established under CRP.

NRCS Response: NRCS welcomes the recommendation and will continue coordinating with FSA to improve the transition process within authority. NRCS has amended the regulation to allow transitioning land to participate in CSP as authorized in the 2014 Act, and has established a seamless process to transition from CRP back to agricultural production. Presently, NRCS offers four enhancements designed to preserve the benefits gained while in CRP or mitigate negative effects from transitioning expired CRP lands to production agriculture. These enhancements are:

- Animal Enhancement Activity (ANM35): Enhance wildlife habitat on expired grass/legume-covered CRP acres or acres with similar perennial vegetated cover managed as hayland.
- Animal Enhancement Activity (ANM36): Enhance wildlife habitat on expired tree-covered CRP acres or acres with similar woody cover managed as forestland.
- Animal Enhancement Activity (ANM37): Prescriptive grazing management system for grazed lands (includes expired CRP grass/legume- or tree-covered acres converted to grazed lands).
- Soil Quality Enhancement Activity (SQL10): Crop management system where crop land acres were recently converted from CRP grass/legume cover or similar perennial vegetation.

Detailed descriptions of these enhancement activities can be found at the agency program Web site. [2] NRCS will continue evaluating new technology that can be offered in the future to help producers transition back to agricultural production in a sustainable manner. Changes are not needed to the CSP regulation in response to these comments.

Contract Limit

Comment: NRCS received 103 comments recommending that NRCS eliminate the higher contract limit that is available to joint operations. Two other comments recommended that NRCS retain the higher contract limit.

NRCS Response: Since 2010, NRCS identified in the CSP regulation a contract limitation of $200,000 per person or legal entity, and $400,000 for joint operations. The original CSP statute required that ''A person or legal entity may not receive, directly or indirectly, payments that, in the aggregate, exceed $200,000 for all contracts entered into during any 5-year period.'' There is no statutory mention of a contract limit.

Payment limitations do not apply directly to ''joint operations'' (the term joint operation includes general partnerships and joint ventures). Rather, each member of a joint operation is treated as a separate person or legal entity with payments directly attributed to them. With no contract limit or direct attribution, contracts with joint operations could be very large (for example, $1 million contracts for joint operations with five members that received the $200,000 maximum).

To address these concerns under the original statute, NRCS imposed a regulatory contract limit that corresponded with the program payment limitation of $200,000, and later established a higher contract limit for joint operations. This resulted in unintended consequences as it encouraged applicants and participants to restructure their operations to qualify for the higher contract limit.

The 2014 Act did not address NRCS regulatory contract limits and NRCS kept the higher contract limit for joint operations in the CSP interim rule, but prohibited any increase in contract obligation due to producers restructuring their operation and transferring the contracts to joint operations eligible for the higher contract limit during the contract term. NRCS did not receive any comments on this prohibition and maintains such prohibition in this final rule.

However, on the issue of eliminating the higher contract level itself, NRCS does not believe it is appropriate to make such a change in this final rule since NRCS did not identify in the interim rule that it might reconsider whether or not to keep the higher contract limit for joint operations. Therefore, NRCS is maintaining the $400,000 contract limit for joint operations. NRCS is considering requesting additional public input on this specific topic though a separate **Federal Register** notice at a later date.

Cropland Conversion

Comment: NRCS received one comment that expressed uncertainty about whether the prohibition on making payment for land converted to cropland applied to forestland.

NRCS Response: Section 1238E(b)(2) of the CSP statute specifies that eligible land used for crop production after February 7, 2014, (the date of enactment of the 2014 Act), that had not been planted, considered to be planted, or devoted to crop production for at least 4 of the 6 years preceding that date, shall not be the basis for any payment under CSP unless certain exceptions apply. This prohibition applies to all eligible land under the program, including non-industrial private forest land. Therefore, non-industrial forest land that was not in crop production for at least 4 of the 6 years preceding February 7, 2014, is not eligible for CSP payment if it is subsequently converted to cropland. No changes were made to the regulation in response to this comment.

Eligibility

Comment: NRCS received 19 comments that recommended that NRCS incorporate flexibility into the requirement that an entire farm be enrolled under a CSP contract.

NRCS Response: Section 1238F(a) of the CSP statute specifies that to be eligible to participate in CSP, a producer shall submit to the Secretary a contract offer for the agricultural operation. As described above, NRCS applies a majority test to determine the scope of an applicant's agricultural operations and whether it is substantially separate from other operations of the applicant. NRCS believes that this test provides a credible, flexible means by which agricultural operations are identified and enrolled within statutory requirements. No changes to the CSP regulation were made in response to these comments.

[2] *http://www.nrcs.usda.gov/wps/portal/nrcs/detail/national/programs/financial/csp/?cid=stelprdb1265825.*

Enhancements and Enhancement Options

Comment: NRCS received 17 comments related to enhancements and enhancement options. Among these comments were recommendations that there be more enhancements specific to organic production for certified organic producers, that enhancement options address measurable sustainable practices, and increase the availability of enhancements that will restore grasslands back to native prairie conditions. The comments related to the native grass enhancements asserted that this recommendation would provide a mechanism for better wildlife management for hunting and recreational use, and thus stimulate rural economies in small towns.

NRCS Response: NRCS will consider these recommendations in its identification and adoption of enhancements for future signups. Consistent with program purpose, future enhancements will meet or exceed the quality criteria for resource concerns. These comments do not relate directly to the regulations, and therefore no changes were made to the CSP regulations in response to these comments.

Environmental Credits

Comment: NRCS received two comments related to environmental credits. One respondent recommends that there be a program that compensates for carbon sequestration and another requests that access to environmental credit trading opportunities be made available to CSP participants.

NRCS Response: NRCS identifies in § 1470.37 of the CSP regulations that CSP participants may achieve environmental benefits that qualify for environmental credits under an environmental credit-trading program. However, a CSP participant who enters into such a credit-trading program must ensure that any activities under that trading program are consistent with their responsibilities under the CSP contract. While CSP does not make payments directly for carbon sequestration, many of the conservation activities for which payment is made do assist with carbon sequestration efforts. For example, high residue cover crops or mixtures of high residue cover crops for weed suppression and soil health, or prairie restoration for grazing and wildlife habitat, both provide carbon building opportunities. No changes were made to the CSP regulation in response to these comments.

Fairness

Comment: NRCS received six comments recommending all farmers be treated equally, and for NRCS to keep the small and medium-sized agricultural entities at the forefront of NRCS plans.

NRCS Response: NRCS reviews each of its policies in light of how such policy may affect small and medium-sized agricultural operations, and removes, wherever possible, any barriers to full participation. NRCS is also exploring other ways to increase participation of producers with small operations, including expanding the minimum payment to all producers and potentially designating ranking pools for small operations to accommodate competitions of applicants that have similar challenges, such as limited resources to implement new activities. These efforts being evaluated are expected to increase participation of small operations and treat all producers fairly. NRCS considered these comments about fairness when reviewing how to address all the other topics raised by the public comments.

Modifications

Comment: NRCS received two comments recommending that participants be allowed to add qualifying land to an existing CSP contract during the CSP contract term, and three other comments recommending that participants be allowed to remove land from a CSP contract and that NRCS adopt more flexibility to allow participants to make changes to the resource inventory for their agricultural operation without penalty.

NRCS Response: NRCS recognizes that some of its flexibility in managing CSP contracts was limited by the business tools available. As identified above, NRCS has convened a team to review the business processes and methods used to implement CSP, including methods that may facilitate greater flexibility in allowing participants to make appropriate modifications to their CSP contracts. No changes were made to the CSP regulation in response to these comments.

The CSP contract modification and transfer provision encompasses circumstances where a participant is considered in violation of their CSP contract for losing control of the land under contract for any reason. NRCS may allow a participant to transfer the CSP contract rights to an eligible producer provided: (1) The participant notifies NRCS of the loss of control within the time specified in the contract; (2) NRCS determines that the new producer is eligible to participate in the program; and (3) the transfer of the contract rights does not interfere with meeting program objectives.

Given that the new producer is not a party to the CSP contract until NRCS approves the contract transfer and adds the new producer to the contract, a new producer may not be aware they are not eligible for payment until the contract transfer has been approved by NRCS. In particular, any activities that a new producer implements prior to NRCS approval of the contract transfer is not eligible for payment because they are not a program participant at the time of implementation. NRCS is taking this opportunity to clarify the provisions at 7 CFR 1470.25, including: (1) A participant's responsibility to notify NRCS about any loss of control of land; (2) the timing of when a new producer must be identified; (3) the timing of when a new producer becomes eligible for payment; and (4) the circumstances when partial or full termination of the contract may be appropriate. This change does not affect the substance of NRCS regulatory and policy framework regarding land transfers.

Outreach

Comment: NRCS received two comments related to the topic of outreach, including recommendations that NRCS explore more options to attract more organic producers to CSP.

NRCS Response: In prior years, NRCS has offered enhancements that specifically address organic production and transitioning to organic production. Additionally, NRCS has offered conservation activities which have a high likelihood of adoption by organic producers or those who are interested in transitioning to organic production. NRCS is currently exploring opportunities to simplify CSP implementation, and is going to tie its enhancement offerings more closely with NRCS conservation practices. Through the new process, NRCS anticipates offering expanded opportunities for participation by organic productions and those transitioning to organic production, such as offering enhancement bundles specifically targeted to these producers. Enhancement bundles are a suite of enhancements that provide greater environmental benefits when implemented in conjunction with one another.

Payments

Comment: NRCS received 114 comments related to payments under CSP, nearly all of which expressed

concern about two primary issues: The $1,000 minimum annual payment to historically underserved producers and the basis upon which payments are calculated. The commenters nearly uniformly requested that the minimum annual payment be increased to $1,500 for all CSP participants. In regard to the second issue, commenters were split in their recommendations. Many of the commenters recommended that CSP place more emphasis upon paying for existing conservation activities rather than for adopting new conservation activities, while other commenters recommended that CSP payments be limited to new conservation activities.

NRCS Response: Currently, § 1470.24(c) identifies that NRCS will make a minimum contract payment to historically underserved participants at a rate determined by the Chief in any fiscal year that a contract's payment amount total is less than $1,000. Thus, currently, the minimum payment amount is only available to limited resource farmers, beginning farmers and ranchers, and socially disadvantaged farmers and ranchers. NRCS examined several scenarios and the impact that the adoption of different policies would have on program expenditures, and decided to adopt, for fiscal year 2016, a minimum contract payment of $1,500 for any participant whose annual contract amount is less than $1,500. The Chief may modify this minimum contract payment in future years based upon the effort required of a participant to comply with contract requirements. Therefore, § 1470.24(c) in this final rule has been modified accordingly.

As for payment split calculations, the balance between how much emphasis is placed on existing conservation activities versus new conservation activities has been repeatedly raised and addressed in program implementation. CSP program participants are eligible to receive annual payments for existing conservation levels and to implement additional conservation activities. The costs associated with maintaining existing conservation levels are often less than the costs associated with implementing additional conservation activities, resulting in additional conservation activities contributing more to the annual payment rate. NRCS believes maintaining the current payment process in favor of additional activities ensures that the program emphasis meets statutory intent and that stewardship levels improve over the term of the contract. Further, this payment structure provides the appropriate encouragement to ensure such improvement. No changes were made to the regulation in response to these comments.

Producers

Comment: NRCS received one comment recommending that participants be ''actively engaged'' in the agricultural operation.

NRCS Response: NRCS concurs with the respondent's recommendation and had incorporated this requirement in the CSP interim rule at 7 CFR 1470.6(a)(1). Since such requirement already exists, no further changes have been made to the CSP regulation in response to this comment.

Ranking

Comment: NRCS received 47 comments on the topic of ranking, most of which recommended that existing activities be given either equal or greater priority in ranking applications, while a couple of comments recommended that new activities be given priority in ranking. Some of the commenters recommended that ranking be based on environmental benefits and outcomes.

NRCS Response: In § 1470.20(d) of the CSP interim rule and related discussion in the preamble, NRCS identified that it would maintain weightings of ranking factors that continue to emphasize greatly the extent to which additional activities will be adopted. The ranking provisions in the CSP statute favor additional activities over existing activities. NRCS gives equal weight to each of the statutory factors, resulting in greater emphasis upon new activities. NRCS believes maintaining the current ranking process in favor of additional activities ensures that the program emphasis meets CSP's statutory intent. No changes were made to the regulation in response to these comments.

Renewals

Comment: NRCS received four comments related to contract renewal, including: Disagreement with the requirement to maintain the documented system when renewing, concern that additional activities become existing activities under renewal and are thus unavailable to be planned again, concern that it appears payments for renewed grazing operations is half of the original contract but the same does not appear to be true for cropland operations, and a recommendation that producers should be able to drop irrelevant practices at the time of renewal.

NRCS Response: NRCS incorporated the statutory requirements for contract renewal in § 1470.26 of the CSP interim rule. The purpose of the requirement to maintain the documented system when renewing is to ensure that the producer is ''in compliance with the terms of their initial contract as determined by NRCS'' (7 CFR 1470.26(b)(1)). No changes were made to the regulation in response to this comment; however, NRCS is reviewing its business methods, and is exploring ways to facilitate the substitution of conservation activities between the initial contract and the renewal contract where appropriate.

The difference in payment rates between the initial contract and a renewal contract results from the different activities that will be implemented during the renewal contract. In particular, once a participant has adopted a conservation activity under the original contract, the participant only incurs maintenance costs associated with that conservation activity under a renewal contract related to the costs. The costs of maintenance for most conservation activities are lower than the costs incurred during initial implementation, thus resulting in a lower payment rate for the renewal contract unless the participant adopts new conservation activities. Due to the changes in the availability of certain activities and enhancements, these payment disparities seem to be more pronounced for contract renewals associated with the first, 2010–2011, signup, and NRCS analysis reveals that higher payments will be available for future renewal signup.

State Technical Committees

Comment: NRCS received one comment related to the topic of State Technical Committees, recommending that the process by which these committees provide input to identify a priority resource concern should be more transparent.

NRCS Response: NRCS has published a regulation (at 7 CFR part 610, subpart C) and standard operating procedures (*e.g.,* 74 FR 66907) for how it seeks input from the State Technical Committees and how the public can be aware of their activities. In particular, pursuant to 7 CFR 610.23, State Conservationists must provide public notice and allow the public to attend State Technical Committee and Local Working Group meetings. The meeting notice must be published at least 14 calendar days prior to a State Technical Committee meeting, unless State open meeting laws exist and provide for a longer notification period. NRCS believes that how it conducts its meetings provides transparency regarding State Technical Committee input with respect to all of its conservation programs, including

identification of priority resource concerns for CSP implementation. No changes were made to the CSP regulations in response to this comment.

Stewardship Thresholds

Comment: NRCS received 46 comments that the stewardship thresholds should be set at a sustainable level.

NRCS Response: NRCS currently incorporates sustainability in the established thresholds based upon information within the NRCS Technical Guides, which establish standards for resource conditions that help provide sustained use of natural resources. NRCS will continue evaluating stewardship thresholds after each signup to ensure the program purpose continues to be met as signups progress and the pool of applicants change. No changes were made to the CSP regulation in response to these comments.

Regulatory Changes

As identified above, in response to public comments, NRCS is changing the minimum contract payment available under § 1470.24(c).

In addition to these changes, NRCS is also making a change with respect to a contract requirement under § 1470.24(a) and (b). In particular, paragraph (a) requires that at least one additional conservation activity must be scheduled, installed, and adopted in the first fiscal year of the contract, and all enhancements must be scheduled, installed, and adopted by the end of the third fiscal year of the contract. Paragraph (b)(2) requires that a resource-conserving crop rotation must be planted on at least one-third of the rotation acres by the third fiscal year of the contract.

These requirements arose under the original program to ensure that there was sufficient justification of costs for NRCS to make payment in the first year of enrollment and that participants implement enhancements and crop rotations as soon as possible in the term of the contract. NRCS is modifying the provision to be consistent with the Environmental Quality Incentives Program found in 7 CFR part 1466 where practices have to be installed within the first 12 months after contract approval versus tying it to a Federal fiscal year. Tying conservation activity implementation to a Federal fiscal year may preclude a participant from having a full year to implement a conservation activity. Even so, NRCS remains cognizant that CSP and EQIP have certain fundamental differences that require different approaches. One of these is that CSP, unlike EQIP, targets the best conservation stewards. As such, it is reasonable to expect under most circumstances that CSP participants will implement enhancements and resource-conserving crop rotations expeditiously. Thus, NRCS maintains the time requirement in the regulation in which enhancements and resource-conserving crop rotations must be implemented, but provides the Chief with flexibility to ensure appropriate planning for particular enhancements and resource-conserving crop rotations where conservation stewardship goals will be better met with a different implementation schedule.

Therefore, NRCS is adjusting these time requirements in the regulation. These changes will improve implementation of CSP stewardship plan requirements and minimize the need for unnecessary late scheduling implementation waivers to allow the producer to earn the first payment if the contract is awarded late in the Federal fiscal year. Additionally, NRCS has simplified language to incorporate the 2014 Act's removal of the required use of CMT and the flexibility provided to prorate annual payments over the term of the contract.

Regulatory Certifications

Executive Order 12866 and 13563

Executive Order 12866, ''Regulatory Planning and Review,'' and Executive Order 13563, ''Improving Regulation and Regulatory Review,'' direct agencies to assess all costs and benefits of available regulatory alternatives and, if regulation is necessary, to select regulatory approaches that maximize net benefits (including potential economic, environmental, public health and safety effects, distributive impacts, and equity). Executive Order 13563 emphasizes the importance of quantifying both costs and benefits, of reducing costs, of harmonizing rules, and of promoting flexibility. NRCS is currently conducting a focused internal review of CSP and accompanying regulations with the goal of providing improved customer service and, ultimately, improved program performance. NRCS is also exploring ways to emphasize priority enhancements in CSP, as well as ways to better understand and relay to the public the economic and environmental benefits of conservation implementation over time. NRCS expects the results of these retrospective review efforts to improve management and maximize the impact of the intended conservation benefits associated with the program.

The Office of Management and Budget (OMB) designated this final rule a significant regulatory action. The administrative record is available for public inspection at USDA headquarters at 1400 Independence Avenue, Southwest, South Building, Room 5247, Washington, DC 20250. Pursuant to Executive Order 12866, NRCS conducted a regulatory impact analysis of the potential impacts associated with this program. A summary of the analysis can be found at the end of this preamble, and a copy of the analysis is available upon request from the Director of the Financial Assistance Programs Division (see above for contact information), or electronically at: *http://www.nrcs.usda.gov/programs/csp/* under the CSP Rules and Notices with Supporting Documents title. In addition, the analysis and other supporting documents can be found at *www.regulations.gov* by accessing docket number NRCS–2014–0008.

Executive Order 12866, as supplemented by Executive Order 13563, requires each agency to write all rules in plain language. In addition to the substantive comments NRCS received to the interim rule, NRCS invited public comment on how to make the provisions easier to understand. NRCS has incorporated these recommendations for improvement where appropriate. NRCS responses to public comment are described more fully later in this preamble.

Regulatory Flexibility Act

The Regulatory Flexibility Act (5 U.S.C. 601–612) generally requires an agency to prepare a regulatory flexibility analysis of any rule subject to notice and comment rulemaking requirements under the Administrative Procedure Act or any other statute. NRCS did not prepare a regulatory flexibility analysis for this rule because NRCS is not required by 5 U.S.C. 553, or any other provision of law, to publish a notice of proposed rulemaking with respect to the subject matter of this rule. Even so, NRCS has determined that this action, while mostly affecting small entities, will not have a significant economic impact on a substantial number of these small entities. NRCS made this determination based on the fact that this regulation only impacts those who choose to participate in the program. Small entity applicants will not be affected to a greater extent than large entity applicants.

Environmental Analysis

NRCS has determined that changes made by this rule fall within a category of actions that are excluded from the

requirement to prepare either an Environmental Assessment (EA) or Environmental Impact Statement (EIS). The changes made by the rule are primarily those mandated by the 2014 Act, though there are additional administrative changes made to improve consistency with other NRCS programs and make other clarifications. NRCS has no discretion with respect to changes mandated by the 2014 Act; therefore, the National Environmental Policy Act (NEPA) does not apply. Administrative changes made in this rule fall within a categorical exclusion for policy development relating to routine activities and similar administrative functions (7 CFR 1b.3(a)(1)), and NRCS has identified no extraordinary circumstances that would otherwise require preparation of an EA or EIS.

To further its site-specific compliance with NEPA, NRCS reviewed the 2009 CSP Programmatic EA, and found this rule makes no substantial changes that are relevant to environmental concerns as compared to the EA proposed action. Furthermore, NRCS has not found any significant new circumstances or information relevant to environmental concerns. As a result, NRCS will continue to tier to the 2009 CSP Programmatic EA as appropriate to meet NEPA requirements related to site-specific activities.

Civil Rights Impact Analysis

NRCS has determined, through a Civil Rights Impact Analysis, that the final rule discloses no disproportionately adverse impacts for minorities, women, or persons with disabilities. The national target of setting aside 5 percent of CSP acres for socially disadvantaged farmers and ranchers, and an additional 5 percent of CSP acres for beginning farmers and ranchers, as well as prioritizing veterans applications that are competing in these subaccounts for socially disadvantaged farmers and ranchers, and beginning farmer and ranchers is expected to increase participation among these groups.

The data presented in the analysis indicate producers who are members of the protected groups have participated in NRCS conservation programs at parity with other producers. Extrapolating from historical participation data, it is reasonable to conclude that CSP will continue to be administered in a nondiscriminatory manner. Outreach and communication strategies are in place to ensure all producers will be provided the same information to allow them to make informed decisions regarding the use of their lands that will affect their participation in USDA programs. NRCS conservation programs apply to all persons equally, regardless of their race, color, national origin, gender, sex, or disability status. Therefore, this interim rule portends no adverse civil rights implications for women, minorities, or persons with disabilities.

Paperwork Reduction Act

Section 1246 of the 1985 Act provides that implementation of programs authorized by Title XII of the 1985 Act be made without regard to the Paperwork Reduction Act of 1995 (44 U.S.C. 3501 *et seq.*). Therefore, NRCS is not reporting recordkeeping or estimated paperwork burden associated with this final rule.

Government Paperwork Elimination Act

NRCS is committed to compliance with the Government Paperwork Elimination Act and the Freedom to E-File Act, which require government agencies, in general, to provide the public the option of submitting information or transacting business electronically to the maximum extent possible. To better accommodate public access, NRCS has developed an online application and information system for public use.

Executive Order 13175

This final rule has been reviewed in accordance with the requirements of Executive Order 13175, ''Consultation and Coordination with Indian Tribal Governments.'' Executive Order 13175 requires Federal agencies to consult and coordinate with Tribes on a government-to-government basis regarding policies that have Tribal implications, including regulations, legislative comments or proposed legislation, and other policy statements or actions that have substantial direct effects on one or more Tribes, on the relationship between the Federal government and Tribes, or on the distribution of power and responsibilities between the Federal government and Tribes. NRCS has assessed the impact of this final rule on Tribes and determined that this rule does not have Tribal implications that require Tribal consultation under Executive Order 13175.

The agency has developed an outreach and collaboration plan that it has been implementing as it develops its policy in regard to the 2014 Act. If a Tribe requests consultation, NRCS will work at the appropriate local, State, or national level, including with the USDA Office of Tribal Relations, to ensure meaningful consultation is provided where changes, additions, and modifications identified herein are not expressly mandated by Congress.

Unfunded Mandates Reform Act of 1995

Title II of the Unfunded Mandates Reform Act of 1995 (UMRA), Public Law 104–4, requires Federal agencies to assess the effects of their regulatory actions on the private sector, or State, local, and Tribal governments of $100 million or more in any one year. When such a statement is needed for a rule, section 205 of UMRA requires NRCS to prepare a written statement, including a cost-benefit assessment, for proposed and final rules with ''Federal mandates'' that may result in such expenditures for State, local, or Tribal governments, in the aggregate, or to the private sector. UMRA generally requires agencies to consider alternatives and adopt the more cost effective or least burdensome alternative that achieves the objectives of the rule.

This rule contains no Federal mandates, as defined under Title II of UMRA, for the private sector, or State, local, and Tribal governments. Thus, this rule is not subject to the requirements of sections 202 or 205 of UMRA.

Executive Order 13132

NRCS has considered this final rule in accordance with Executive Order 13132, issued August 4, 1999. NRCS has determined that the final rule conforms with the federalism principles set out in this Executive Order, would not impose any compliance costs on the States, and would not have substantial direct effects on the States, on the relationship between the Federal government and the States, nor on the distribution of power and responsibilities among the various levels of government. Therefore, NRCS concludes that this final rule does not have federalism implications.

Economic Analysis—Executive Summary

CSP is authorized under the provisions of Chapter 2, Subtitle D of Title XII of the 1985 Act (16 U.S.C. 3830 *et seq.*), as amended by Title II, Subtitle D of the 2008 Act, Public Law 110–246, 122 Stat. 1651 (2008), and by Title II, Subtitle B of the 2014 Act, Public Law 113–79 (2014). The Secretary of Agriculture, acting through the Chief of NRCS, administers the program.

As part of the 2014 Act, Congress reauthorized CSP and capped enrollment at 10 million acres for each fiscal year during the period February 7, 2014, through September 30, 2022. However, the 2014 Act only provided funding through fiscal year 2018. CSP contracts run for 5 years and include the

potential for a one-time renewal option for an additional 5 years, thus creating financial obligations through fiscal year 2027 for commitments made during fiscal years 2014 to 2018. Nationally, program costs cannot exceed an annual average rate of $18 per acre. For each of the five fiscal year signups (2014 to 2018) including a one-time contract renewal option for an additional 5 years, Congress authorized a maximum of $1.8 billion. Total authorized funding equals $9 billion for the five signups.

Participation in CSP is voluntary. Agricultural and forestry producers decide whether or not CSP participation helps them achieve their objectives. Hence, CSP participation is not expected to negatively impact program participants and nonparticipants.

Pursuant to Executive Order 12866, Regulatory Planning and Review (Office of the President, 1993) and the Office of Management and Budget's Circular A–4 (Office of Information and Regulatory Affairs, 2003) that provides guidance in conducting regulatory analyses, NRCS conducted an assessment of CSP consistent with its classification as a ''significant'' program. Most of this rule's impacts consist of transfers from the Federal government to producers. Although these transfers create incentives that very likely cause changes in the way society uses its resources, we lack data to estimate the resulting social costs or benefits. This analysis therefore, includes a summary of program costs and qualitative assessment of program impacts.

Total program obligations for CSP are shown in table E1. Obligations include only costs to the Federal government between fiscal year 2014 and 2027 (five signups with one-time, 5-year contract renewals). Projected maximum program obligations in nominal dollars equal $9 billion. Given a 3 percent discount rate, projected cumulative program obligations equal $6.405 billion in constant 2014 dollars. At a 7 percent discount rate, maximum program obligations equal $4.942 billion in constant 2014 dollars. Average annualized obligations at the 3 percent and 7 percent discount rates equal $567 million and $565 million, respectively.

TABLE E1—PROJECTED MAXIMUM PROGRAM OBLIGATIONS FOR CSP, FY 2014 THROUGH FY 2027 [a]

Fiscal year	Obligation [b] (million $)	GDP price deflator [c] (2014=100)	Obligation constant dollars (million $)	Discount factors for 3%	Present value of obligation—3% (million $)	Discount factors for 7%	Present value of obligation—7% (million $)
FY14	180	100.0000	180	0.9709	175	0.9346	168
FY15	360	102.1000	353	0.9426	332	0.8734	308
FY16	540	104.2441	518	0.9151	474	0.8163	423
FY17	720	106.4332	676	0.8885	601	0.7629	516
FY18	900	108.6683	828	0.8626	714	0.7130	591
FY19	900	110.9504	811	0.8375	679	0.6663	541
FY20	900	113.0584	796	0.8131	647	0.6227	496
FY21	900	115.2065	781	0.7894	617	0.5820	455
FY22	900	117.3954	767	0.7664	588	0.5439	417
FY23	900	119.6260	752	0.7441	560	0.5083	382
FY24	720	121.8989	591	0.7224	427	0.4751	281
FY25	540	124.2149	435	0.7014	305	0.4440	193
FY26	360	126.5750	284	0.6810	194	0.4150	118
FY27	180	128.9799	140	0.6611	92	0.3878	54
Total	9,000		7,912		6,405		4,942
Annualized Obligations					567		565

[a] Table 1 of this document.
[b] Congress set a maximum of 10 million acres per signup and a national payment rate of $18 per acre. With a one-time contract renewal option, each signup equals $1.8 billion in projected program obligations over its 10-year period. Congress authorized five signups.
[c] For years 1 to 5, the GDP adjustment is 2.10 percent (OMB); for years 6 to 14, the GDP adjustment factor is 1.90 percent (average growth since 1993).

Compared to CSP as authorized under the 2008 Act, Congress reduced its size but left much of CSP's underlying structure intact. In addition, the Secretary of Agriculture proposed a number of discretionary changes as a means of improving program implementation.

As shown in table E2, the downsizing of CSP from an annual 12.769-million-acre program to an annual 10-million-acre program has the greatest impacts on program funds, conservation activities, and cost-effectiveness. Program funds, which include financial and technical assistance, decrease by $2.492 billion (nominal dollars), compared to CSP under the 2008 Act. With fewer acres and fewer dollars, fewer contracts will be funded under the 2014 Act. The new conservation activities that would have been applied to enhance the existing activities on the lost 2.769 million acres will not be applied to the Nation's working lands. However, cost-effectiveness, defined as dollars per additional unit of conservation effect, will improve slightly because lower ranked eligible applications are the first ones cut from every State's ranking pools. That is, obligations per unit of conservation effect will be lower under the 2014 Act. Properly implemented, a smaller sized CSP will be neutral in its impacts across all producer types, including beginning and socially disadvantaged groups.

TABLE E2—PROGRAM IMPACTS OF THE STATUTORY REQUIREMENTS AND DISCRETIONARY ACTIONS [a]

Statutory	Based on 2008 CSP Farm Bill Provisions: 12.769 Million Acres vs. 10 Million Acres			
	Program funds	Impacts of conservation activities	Cost-effectiveness	Participant diversity
Acreage Enrollment Limitation.	−$2.492 billion in program funds.	Significantly large decrease.	Small improvement	No impact.
	2008 CSP at 10 Million Acres vs. 2014 CSP at 10 Million Acres			
Conditions for Contract Renewal.	Small/Moderate decrease	Increase	Small Improvement	No Impact.
Discretionary	Program funds	Impacts of conservation activities	Cost-effectiveness	Participant diversity
Contract Renewal: To renew contracts, shift eligibility determinations to applicable priority resource concerns.	Moderate decrease	Marginal Increase	Marginal Improvement	No Impact.
Annual minimum contract payment (increase to $1,500; all participants).	+; Negligible	No Impact	−; Negligible	No Impact.

[a] Shortened version of table 9 and table 11 in the main document.

One additional legislated change in the 2014 Act, additional contract renewal requirements, is also expected to generate smaller, yet important program impacts. The legislated 2014 contract renewal requirements—producer agrees to meet the stewardship thresholds for at least two additional priority resource concerns by the end of the renewed contract period *or* to exceed the stewardship thresholds of at least two existing priority resource concerns specified in the original contract—will likely result in a slightly larger portion of CSP participants not renewing their contracts compared to a comparably sized 2008 CSP and renewal rate. The 2008 Act only requires the addition of one or more new conservation activities for contract renewal. However, CSP participants under the 2014 Act are required to add activities to meet or exceed stewardship thresholds for at least two priority resource concerns, thus likely increasing the number of additional activities applied in the second 5-year period. With yearly payments extended and more activities being applied under 2014 Act renewals, a slight improvement in cost-effectiveness is expected. Overall no differential impacts are expected between general agricultural and forest producers, and beginning and socially disadvantaged producers, including veteran status.

An important discretionary change is clearly defining the terms ''applicable priority resource concerns'' and ''other priority resource concerns''. ''Applicable priority resource concerns'' represent resource issues within a watershed or portion of a State that NRCS is targeting for improvement. ''Other priority resource concerns'' are resource concerns that may or may not exist in a watershed but are currently not being targeted for improvement. These definitions allow NRCS to better describe how it is targeting resources to meet statutory objectives.

A second discretionary change is the implementation of a $1,500 minimum annual payment. Any CSP contract with an annual payment less than $1,500 is increased to $1,500. Comments submitted in response to CSP's Interim Rule (NRCS, 2014) suggest that CSP is not cost effective for small operations because payments are based on acres and not costs. Planning, management, machinery, and equipment costs, for example, typically decrease as operation size increases due to economies of scale. As shown, in table E2, this discretionary change negligibly increases program funds, does not impact any existing or new conservation activities, negligibly decreases cost-effectiveness, and does not change participant diversity with respect to the historically underserved.

In summary, differences in program impacts between the 2008 CSP and the 2014 CSP can be attributed primarily to the program's smaller acre cap of 10 million acres. Statutory requirements related to contract renewals and proposed discretionary actions will result in a more focused approach to meeting conservation objectives and encouraging more participation of small operations.

List of Subjects in 7 CFR Part 1470

Agricultural operation, Conservation activities, Natural resources, Priority resource concern, Stewardship threshold, Resource-conserving crop rotation, Soil and water conservation, Soil quality, Water quality and water conservation, Wildlife and forest management.

Accordingly, the interim rule amending 7 CFR part 1470, which was published at 79 FR 65836 on November 5, 2014, is adopted as a final rule with the following changes:

PART 1470—CONSERVATION STEWARDSHIP PROGRAM

■ 1. The authority citation for part 1470 continues to read as follows:

Authority: 16 U.S.C. 3838d–3838g;

■ 2. Amend § 1470.24 by revising paragraphs (a)(1)(i), (a)(3), (b)(2), and (c) to read as follows:

§ 1470.24 Payments.

(a) * * *

(1) To receive annual payments, a participant must:

(i) Install and adopt additional conservation activities as scheduled in the conservation stewardship plan. At least one additional conservation activity must be scheduled, installed, and adopted within the first 12 months of the contract. All enhancements must be scheduled, installed, and adopted by the end of the third fiscal year of the contract, unless the Chief approves a different schedule to meet specific conservation stewardship goals. Installed enhancements must be

maintained for the remainder of the contract period and adopted enhancements must recur for the remainder of the contract period.

* * * * *

(3) Annual payments will be prorated over the contract term so as to accommodate, to the extent practicable, participants earning equal annual payments in each fiscal year;

* * * * *

(b) * * *

(2) A participant must adopt or improve the resource-conserving crop rotation during the term of the contract to be eligible to receive a supplemental payment. Unless the Chief approves a different schedule to meet the conservation stewardship goals of particular crop rotation sequences, a resource-conserving crop rotation:

(i) Is considered adopted when the resource-conserving crop is planted on at least one-third of the rotation acres; and

(ii) Must be adopted by the third fiscal year of the contract and planted on all rotation acres by the fifth fiscal year of the contract; and

* * * * *

(c) *Minimum contract payment.* NRCS may make a minimum contract payment to a participant in any fiscal year in which the contract's payment amount total is less than a rate determined equitable by the Chief based upon the effort required by a participant to comply with the terms of the contract.

* * * * *

■ 3. Amend § 1470.25 by revising paragraph (d) and adding new paragraphs (e) through (g) to read as follows:

§ 1470.25 Voluntary contract modifications and transfers of land.

* * * * *

(d) Within the time specified in the contract, a participant must provide NRCS with written notice regarding any voluntary or involuntary loss of control of any acreage under the CSP contract, which includes changes in a participant's ownership structure or corporate form. Failure to provide timely notice will result in termination of the entire contract.

(e) Unless NRCS approves a transfer of contract rights under this paragraph, a participant losing control of any acreage will constitute a violation of the CSP contract and NRCS will terminate the contract and require a participant to refund all or a portion of any financial assistance provided. NRCS may approve a transfer of the contract if:

(1) NRCS receives written notice that identifies the new producer who will take control of the acreage, as required in paragraph (d) of this section;

(2) The new producer meets program eligibility requirements within a reasonable time frame, as specified in the CSP contract;

(3) The new producer agrees to assume the rights and responsibilities for the acreage under the contract; and

(4) NRCS determines that the purposes of the program will continue to be met despite the original participant's losing control of all or a portion of the land under contract.

(f) Until NRCS approves the transfer of contract rights, the new producer is not a participant in the program and may not receive payment for conservation activities commenced prior to approval of the contract transfer.

(g) NRCS may not approve a contract transfer and may terminate the contract in its entirety if NRCS determines that the loss of control of the land was voluntary, the new producer is not eligible or willing to assume responsibilities under the contract, or the purposes of the program cannot be met.

Signed this 3rd day of March, 2016, in Washington, DC.

Jason A. Weller,

Chief, Natural Resources Conservation Service, Vice President, Commodity Credit Corporation.

[FR Doc. 2016–05419 Filed 3–9–16; 8:45 am]

BILLING CODE 3410–16–P

DEPARTMENT OF TRANSPORTATION

Federal Aviation Administration

14 CFR Part 39

[Docket No. FAA–2015–3753; Directorate Identifier 2015–NE–26–AD; Amendment 39–18406; AD 2016–04–12]

RIN 2120–AA64

Airworthiness Directives; Turbomeca S.A. Turboshaft Engines

AGENCY: Federal Aviation Administration (FAA), DOT.

ACTION: Final rule.

SUMMARY: We are adopting a new airworthiness directive (AD) for certain Turbomeca S.A. Arriel 2B, 2B1, 2C, 2C1, 2C2, 2D, 2E, 2S1, and 2S2 turboshaft engines. This AD requires inspection, and, depending on the results, removal of the engine accessory gearbox (AGB). This AD was prompted by a report of an uncommanded in-flight shutdown (IFSD) of an Arriel 2 engine caused by rupture of the 41-tooth gear, which forms part of the bevel gear in the engine AGB. We are issuing this AD to prevent failure of the engine AGB, which could lead to in-flight shutdown, damage to the engine, and damage to the aircraft.

DATES: This AD becomes effective April 14, 2016.

The Director of the Federal Register approved the incorporation by reference of a certain publication listed in this AD as of April 14, 2016.

ADDRESSES: For service information identified in this final rule, contact Turbomeca S.A., 40220 Tarnos, France; phone: 33 0 5 59 74 40 00; fax: 33 0 5 59 74 45 15. You may view this service information at the FAA, Engine & Propeller Directorate, 1200 District Avenue, Burlington, MA. For information on the availability of this material at the FAA, call 781–238–7125. It is also available on the Internet at *http://www.regulations.gov* by searching for and locating Docket No. FAA–2015–3753.

Examining the AD Docket

You may examine the AD docket on the Internet at *http://www.regulations.gov* by searching for and locating Docket No. FAA–2015–3753; or in person at the Docket Management Facility between 9 a.m. and 5 p.m., Monday through Friday, except Federal holidays. The AD docket contains this AD, the mandatory continuing airworthiness information (MCAI), the regulatory evaluation, any comments received, and other information. The address for the Docket Office (phone: 800–647–5527) is Document Management Facility, U.S. Department of Transportation, Docket Operations, M–30, West Building Ground Floor, Room W12–140, 1200 New Jersey Avenue SE., Washington, DC 20590.

FOR FURTHER INFORMATION CONTACT: Philip Haberlen, Aerospace Engineer, Engine Certification Office, FAA, Engine & Propeller Directorate, 1200 District Avenue, Burlington, MA 01803; phone: 781–238–7770; fax: 781–238–7199; email: *philip.haberlen@faa.gov.*

SUPPLEMENTARY INFORMATION:

Discussion

We issued a notice of proposed rulemaking (NPRM) to amend 14 CFR part 39 by adding an AD that would apply to the specified products. The NPRM was published in the **Federal Register** on November 24, 2015 (80 FR 73148). The NPRM proposed to correct an unsafe condition for the specified products. The MCAI states:

An uncommanded in-flight shut-down (IFSD) of an ARRIEL 2 engine was reported, caused by rupture of the 41-tooth gear, which forms part of the bevel gear of the accessory gearbox (module M01). The subsequent investigation revealed that wear on the housing of the front bearing of this gear was a major contributor to this rupture. In addition, the investigation showed that this wear mechanism had resulted in positive Spectrometric Oil Analysis (SOA) indications before the event.

This condition, if not detected and corrected, could potentially lead to further cases of IFSD, possibly resulting in an emergency landing.

You may obtain further information by examining the MCAI in the AD docket on the Internet at *http://www.regulations.gov* by searching for and locating Docket No. FAA–2015–3753.

Comments

We gave the public the opportunity to participate in developing this AD. We received no comments on the NPRM (80 FR 73148, November 24, 2015).

Conclusion

We reviewed the available data and determined that air safety and the public interest require adopting this AD as proposed.

Related Service Information Under 1 CFR Part 51

Turbomeca S.A. has issued Mandatory Service Bulletin No. 292 72 2861, Version A, dated April 24, 2015. The service information describes procedures for inspecting the engine AGB. This service information is reasonably available because the interested parties have access to it through their normal course of business or by the means identified in the **ADDRESSES** section of this final rule.

Costs of Compliance

We estimate that this AD affects 250 engines installed on aircraft of U.S. registry. We also estimate that it will take about 0.5 hours per engine to comply with the initial inspection requirement in this AD and about 2 hours per engine to remove the engine AGB. The spectrometric oil analysis kit costs about $79. The average labor rate is $85 per hour. Based on these figures, we estimate the cost of this AD on U.S. operators to be $72,875.

Authority for This Rulemaking

Title 49 of the United States Code specifies the FAA's authority to issue rules on aviation safety. Subtitle I, section 106, describes the authority of the FAA Administrator. ''Subtitle VII: Aviation Programs,'' describes in more detail the scope of the Agency's authority.

We are issuing this rulemaking under the authority described in ''Subtitle VII, Part A, Subpart III, Section 44701: General requirements.'' Under that section, Congress charges the FAA with promoting safe flight of civil aircraft in air commerce by prescribing regulations for practices, methods, and procedures the Administrator finds necessary for safety in air commerce. This regulation is within the scope of that authority because it addresses an unsafe condition that is likely to exist or develop on products identified in this rulemaking action.

Regulatory Findings

We determined that this AD will not have federalism implications under Executive Order 13132. This AD will not have a substantial direct effect on the States, on the relationship between the national government and the States, or on the distribution of power and responsibilities among the various levels of government.

For the reasons discussed above, I certify this AD:

(1) Is not a ''significant regulatory action'' under Executive Order 12866,

(2) Is not a ''significant rule'' under the DOT Regulatory Policies and Procedures (44 FR 11034, February 26, 1979),

(3) Will not affect intrastate aviation in Alaska to the extent that it justifies making a regulatory distinction, and

(4) Will not have a significant economic impact, positive or negative, on a substantial number of small entities under the criteria of the Regulatory Flexibility Act.

List of Subjects in 14 CFR Part 39

Air transportation, Aircraft, Aviation safety, Incorporation by reference, Safety.

Adoption of the Amendment

Accordingly, under the authority delegated to me by the Administrator, the FAA amends 14 CFR part 39 as follows:

PART 39—AIRWORTHINESS DIRECTIVES

■ 1. The authority citation for part 39 continues to read as follows:

Authority: 49 U.S.C. 106(g), 40113, 44701.

§ 39.13 [Amended]

■ 2. The FAA amends § 39.13 by adding the following new airworthiness directive (AD):

2016–04–12 Turbomeca S.A.: Amendment 39–18406; Docket No. FAA–2015–3753; Directorate Identifier 2015–NE–26–AD.

(a) Effective Date

This AD becomes effective April 14, 2016.

(b) Affected ADs

None.

(c) Applicability

This AD applies to Turbomeca S.A. Arriel 2B, 2B1, 2C, 2C1, 2C2, 2D, 2E, 2S1, and 2S2 turboshaft engines with an engine accessory gearbox (AGB), part number (P/N) 0292120650, with a machined front casing.

(d) Reason

This AD was prompted by a report of an uncommanded in-flight shutdown (IFSD) of an Arriel 2 engine caused by rupture of the 41-tooth gear, which forms part of the bevel gear in the engine AGB. We are issuing this AD to prevent failure of the engine AGB, which could lead to IFSD, damage to the engine, and damage to the aircraft.

(e) Actions and Compliance

Comply with this AD within the compliance times specified, unless already done.

(1) Initial Spectrometric Oil Analysis (SOA)

(i) Perform an initial SOA within the compliance times given in paragraph (e)(1)(i)(A) or (e)(1)(i)(B) of this AD:

(A) If the engine AGB has less than 800 engine hours (EHs) since new or since last overhaul, do an initial SOA before exceeding 850 EHs since new or since last overhaul.

(B) If the engine AGB has 800 EHs or more since new or since last overhaul, or if the EHs are unknown, do an initial SOA within 50 EHs after the effective date of this AD.

(C) Use paragraphs 2.4.2.1 and 2.4.2.2 of Turbomeca S.A. Mandatory Service Bulletin (MSB) No. 292 72 2861, Version A, dated April 24, 2015, to perform the SOA required by paragraph (e) of this AD.

(ii) Reserved.

(2) Repetitive SOA

(i) If the aluminum concentration determined from the most recent SOA is less than 0.8 parts per million (PPM), repeat the SOA required by paragraph (e) of this AD within 100 EHs time since last analysis (TSLA).

(ii) If the aluminum concentration determined from the most recent SOA is between 0.8 PPM and 1.4 PPM, inclusive, repeat the SOA required by paragraph (e) of this AD within 50 EHs TSLA. Do not perform draining before doing the next SOA.

(iii) If the aluminum concentration determined from the most recent SOA is greater than 1.4 PPM, remove the engine AGB from service within 50 EHs TSLA.

(f) Alternative Methods of Compliance (AMOCs)

The Manager, Engine Certification Office, FAA, may approve AMOCs for this AD. Use the procedures found in 14 CFR 39.19 to make your request. You may email your request to: *ANE-AD-AMOC@faa.gov.*

(g) Related Information

(1) For more information about this AD, contact Philip Haberlen, Aerospace Engineer, Engine Certification Office, FAA, Engine & Propeller Directorate, 1200 District Avenue, Burlington, MA 01803; phone: 781–238–7770; fax: 781–238–7199; email: *philip.haberlen@faa.gov.*

(2) Refer to MCAI European Aviation Safety Agency AD 2015–0162, dated August 6, 2015, for more information. You may examine the MCAI in the AD docket on the Internet at *http://www.regulations.gov/#!documentDetail;D=FAA-2015-3753-0001.*

(h) Material Incorporated by Reference

(1) The Director of the Federal Register approved the incorporation by reference (IBR) of the service information listed in this paragraph under 5 U.S.C. 552(a) and 1 CFR part 51.

(2) You must use this service information as applicable to do the actions required by this AD, unless the AD specifies otherwise.

(i) Turbomeca S.A. Mandatory Service Bulletin No. 292 72 2861, Version A, dated April 24, 2015.

(ii) Reserved.

(3) For Turbomeca S.A. service information identified in this AD, contact Turbomeca S.A., 40220 Tarnos, France; phone: 33 0 5 59 74 40 00; fax: 33 0 5 59 74 45 15.

(4) You may view this service information at FAA, Engine & Propeller Directorate, 1200 District Avenue, Burlington, MA. For information on the availability of this material at the FAA, call 781–238–7125.

(5) You may view this service information at the National Archives and Records Administration (NARA). For information on the availability of this material at NARA, call 202–741–6030, or go to: *http://www.archives.gov/federal-register/cfr/ibr-locations.html.*

Issued in Burlington, Massachusetts, on February 18, 2016.

Ann C. Mollica,

Acting Manager, Engine & Propeller Directorate, Aircraft Certification Service.

[FR Doc. 2016–05318 Filed 3–9–16; 8:45 am]

BILLING CODE 4910–13–P

DEPARTMENT OF TRANSPORTATION

Federal Aviation Administration

14 CFR Part 39

[Docket No. FAA–2012–1331; Directorate Identifier 2012–NE–44–AD; Amendment 39–18390; AD 2016–03–03]

RIN 2120–AA64

Airworthiness Directives; Rolls-Royce plc Turbojet Engines

AGENCY: Federal Aviation Administration (FAA), DOT.

ACTION: Final rule.

SUMMARY: We are superseding airworthiness directive (AD) 2013–11–13 for all Rolls-Royce plc (RR) Viper Mk. 601–22 turbojet engines. AD 2013–11–13 required reducing the life of certain critical parts. This AD adds two new engine models and additional engine parts to the applicability. This AD was prompted by a determination by RR that additional parts for the RR Viper Mk. 601–22 as well as additional engine models are affected. We are issuing this AD to prevent failure of life-limited parts, which could lead to an uncontained part release, damage to the engine, and damage to the airplane.

DATES: This AD is effective April 14, 2016.

The Director of the Federal Register approved the incorporation by reference of certain publication listed in this AD as of April 14, 2016.

ADDRESSES: For service information identified in this AD, contact DA Services Operations Room at Rolls-Royce plc, Defense Sector Bristol, WH–70, P.O. Box 3, Filton, Bristol BS34 7QE, United Kingdom; phone: +44 (0) 117 97 90700; fax: +44 (0) 117 97 95498; email: *defence-operations-room@rolls-royce.com.* You may view this service information at the FAA, Engine & Propeller Directorate, 1200 District Avenue, Burlington, MA. For information on the availability of this material at the FAA, call 781–238–7125. It is also available on the Internet at *http://www.regulations.gov* by searching for and locating Docket No. FAA–2012–1331.

Examining the AD Docket

You may examine the AD docket on the Internet at *http://www.regulations.gov* by searching for and locating Docket No. FAA–2012–1331; or in person at the Docket Management Facility between 9 a.m. and 5 p.m., Monday through Friday, except Federal holidays. The AD docket contains this AD, the mandatory continuing airworthiness information, regulatory evaluation, any comments received, and other information. The address for the Docket Office (phone: 800–647–5527) is Document Management Facility, U.S. Department of Transportation, Docket Operations, M–30, West Building Ground Floor, Room W12–140, 1200 New Jersey Avenue SE., Washington, DC 20590.

FOR FURTHER INFORMATION CONTACT: Philip Haberlen, Aerospace Engineer, Engine Certification Office, FAA, Engine & Propeller Directorate, 1200 District Avenue, Burlington, MA 01803; phone: 781–238–7770; fax: 781–238–7199; email: *philip.haberlen@faa.gov.*

SUPPLEMENTARY INFORMATION:

Discussion

We issued a notice of proposed rulemaking (NPRM) to amend 14 CFR part 39 to supersede AD 2013–11–13, Amendment 39–17473 (78 FR 34550, June 10, 2013), (''AD 2013–11–13''). AD 2013–11–13 applied to the specified products. The NPRM published in the **Federal Register** on October 9, 2015 (80 FR 61131). The NPRM proposed to continue to require reducing the life of certain critical parts. That NPRM also proposed to add additional parts for the RR Viper Mk. 601–22 as well as additional engine models to the applicability of this AD.

Comments

We gave the public the opportunity to participate in developing this AD. We received no comments on the NPRM (80 FR 61131, October 9, 2015).

Conclusion

We reviewed the relevant data and determined that air safety and the public interest require adopting this AD as proposed except for minor editorial changes. We have determined that these minor changes:

- Are consistent with the intent that was proposed in the NPRM (80 FR 61131, October 9, 2015) for correcting the unsafe condition; and
- Do not add any additional burden upon the public than was already proposed in the NPRM (80 FR 61131, October 9, 2015).

Related Service Information Under 1 CFR Part 51

RR has issued RR Alert Service Bulletin (ASB) Mk. 521 Number 72–A408, Circulation A, dated January 2015; RR ASB Mk. 521 Number 72–A408, Circulation B, dated January 2015; RR ASB Mk. 522 Number 72–A413, Circulation A, dated January 2015; RR ASB Mk. 522 Number 72–A412, Circulation B, dated January 2015; and RR ASB Mk 601–22 Number 72–A207, dated January 2015. The service information describes procedures for identifying the affected parts installed on each engine and determining their respective new life limit. This service information is reasonably available because the interested parties have access to it through their normal course of business or by the means identified in the **ADDRESSES** section of this final rule.

Costs of Compliance

We estimate that this AD affects about 46 engines installed on airplanes of U.S. registry. We estimate a pro-rated parts cost of $66,000 per engine. We also estimate that it will take about 4 hours

per engine to comply with this AD. The average labor rate is $85 per hour. Based on these figures, we estimate the cost of this AD on U.S. operators to be $3,051,640.

Authority for This Rulemaking

Title 49 of the United States Code specifies the FAA's authority to issue rules on aviation safety. Subtitle I, Section 106, describes the authority of the FAA Administrator. Subtitle VII, Aviation Programs, describes in more detail the scope of the Agency's authority.

We are issuing this rulemaking under the authority described in Subtitle VII, Part A, Subpart III, Section 44701, ''General requirements.'' Under that section, Congress charges the FAA with promoting safe flight of civil aircraft in air commerce by prescribing regulations for practices, methods, and procedures the Administrator finds necessary for safety in air commerce. This regulation is within the scope of that authority because it addresses an unsafe condition that is likely to exist or develop on products identified in this rulemaking action.

Regulatory Findings

This AD will not have federalism implications under Executive Order 13132. This AD will not have a substantial direct effect on the States, on the relationship between the national government and the States, or on the distribution of power and responsibilities among the various levels of government.

For the reasons discussed above, I certify that this AD:

(1) Is not a ''significant regulatory action'' under Executive Order 12866,

(2) Is not a ''significant rule'' under DOT Regulatory Policies and Procedures (44 FR 11034, February 26, 1979),

(3) Will not affect intrastate aviation in Alaska to the extent that it justifies making a regulatory distinction, and

(4) Will not have a significant economic impact, positive or negative, on a substantial number of small entities under the criteria of the Regulatory Flexibility Act.

List of Subjects in 14 CFR Part 39

Air transportation, Aircraft, Aviation safety, Incorporation by reference, Safety.

Adoption of the Amendment

Accordingly, under the authority delegated to me by the Administrator, the FAA amends part 39 of the Federal Aviation Regulations (14 CFR part 39) as follows:

PART 39—AIRWORTHINESS DIRECTIVES

■ 1. The authority citation for part 39 continues to read as follows:

Authority: 49 U.S.C. 106(g), 40113, 44701.

§ 39.13 [Amended]

■ 2. The FAA amends § 39.13 by removing airworthiness directive (AD) AD 2013–11–13, Amendment 39–17473 (78 FR 34550, June 10, 2013), (''AD 2013–11–13''), and adding the following new AD:

2016–03–03 Rolls-Royce plc (Type Certificate previously held by Rolls-Royce (1971) Limited, Bristol Engine Division): Amendment 39–18390; Docket No. FAA–2012–1331; Directorate Identifier 2012–NE–44–AD.

(a) Effective Date

This AD is effective April 14, 2016.

(b) Affected ADs

This AD supersedes AD 2013–11–13.

(c) Applicability

This AD applies to all Rolls-Royce plc (RR) Viper Mk. 521, Viper Mk. 522, and Viper Mk. 601–22 turbojet engines.

(d) Unsafe Condition

This AD was prompted by a review by RR of the lives of certain critical parts. We are issuing this AD to prevent failure of life-limited parts, which could lead to an uncontained part release, damage to the engine, and damage to the airplane.

(e) Compliance

Comply with this AD within the compliance times specified, unless already done.

(1) Within 30 days after the effective date of this AD, or before any affected part exceeds its new revised life limit, whichever occurs later, remove any affected engine from service. Use Table 1 of RR Alert Service Bulletin (ASB) Mk. 521 Number 72–A408, Circulation A, dated January 2015; RR ASB Mk. 521 Number 72–A408, Circulation B, dated January 2015; RR ASB Mk. 522 Number 72–A413, Circulation A, dated January 2015; RR ASB Mk. 522 Number 72–A412, Circulation B, dated January 2015; and RR ASB Mk 601–22 Number 72–A207, dated January 2015, to identify the affected parts installed on each engine and determine their respective new life limits.

(2) For the RR Viper Mk. 601–22 turbojet engine, remove compressor shaft, part number V900766, from service before the compressor shaft accumulates 20,720 flight cycles since new.

(3) Replace any part identified in paragraph (e)(1) or (e)(2) of this AD with a part eligible for installation before the affected part reaches its new life limit specified in paragraph (e)(2) of this AD or in the ASBs referenced in paragraph (e)(1) of this AD.

(f) Installation Prohibition

After the effective date of this AD, do not install any affected part identified in paragraph (e) of this AD into any engine, nor return any engine to service with any affected part identified in paragraph (e) of this AD installed, if any affected part exceeds the life limit specified in the appropriate ASB identified in paragraph (e)(1) of this AD and/or the life limit identified in paragraph (e)(2) of this AD.

(g) Alternative Methods of Compliance (AMOCs)

The Manager, Engine Certification Office, may approve AMOCs for this AD. Use the procedures found in 14 CFR 39.19 to make your request. You may email your request to: *ANE–AD–AMOC@faa.gov.*

(h) Related Information

(1) For more information about this AD, contact Philip Haberlen, Aerospace Engineer, Engine Certification Office, FAA, Engine & Propeller Directorate, 1200 District Avenue, Burlington, MA 01803; phone: 781–238–7770; fax: 781–238–7199; email: *philip.haberlen@faa.gov.*

(2) Refer to MCAI European Aviation Safety Agency AD 2015–0127R1, dated August 14, 2015, for more information. You may examine the MCAI in the AD docket on the Internet at *http://www.regulations.gov* by searching for and locating Docket No. FAA–2012–1331.

(i) Material Incorporated by Reference

(1) The Director of the Federal Register approved the incorporation by reference (IBR) of the service information listed in this paragraph under 5 U.S.C. 552(a) and 1 CFR part 51.

(2) You must use this service information as applicable to do the actions required by this AD, unless the AD specifies otherwise.

(i) Rolls-Royce plc (RR) Alert Service Bulletin (ASB) Mk. 521 Number 72–A408, Circulation A, dated January 2015.

(ii) RR ASB Mk. 521 Number 72–A408, Circulation B, dated January 2015.

(iii) RR ASB Mk. 522 Number 72–A413, Circulation A, dated January 2015.

(iv) RR ASB Mk. 522 Number 72–A412, Circulation B, dated January 2015.

(v) RR ASB Mk 601–22 Number 72–A207, dated January 2015.

(3) For RR service information identified in this AD, contact DA Services Operations Room at Rolls-Royce plc, Defense Sector Bristol, WH–70, P.O. Box 3, Filton, Bristol BS34 7QE, United Kingdom; phone: +44 (0) 117 97 90700; fax: +44 (0) 117 97 95498; email: *defence-operations-room@rolls-royce.com.*

(4) You may view this service information at FAA, Engine & Propeller Directorate, 1200 District Avenue, Burlington, MA. For information on the availability of this material at the FAA, call 781–238–7125.

(5) You may view this service information at the National Archives and Records Administration (NARA). For information on the availability of this material at NARA, call 202–741–6030, or go to: *http://www.archives.gov/federal-register/cfr/ibr-locations.html.*

Issued in Burlington, Massachusetts, on February 2, 2016.

Ann C. Mollica,

Acting Manager, Engine & Propeller Directorate, Aircraft Certification Service.

[FR Doc. 2016–05319 Filed 3–9–16; 8:45 am]

BILLING CODE 4910–13–P

CONSUMER PRODUCT SAFETY COMMISSION

16 CFR Part 1610

Statement of Policy on Enforcement Discretion Regarding General Conformity Certificates for Adult Wearing Apparel Exempt From Testing

AGENCY: U.S. Consumer Product Safety Commission.

ACTION: Statement of enforcement policy.

SUMMARY: The Consumer Product Safety Commission (''CPSC'') has approved a Statement of Policy regarding the CPSC's enforcement of the requirement for a general conformity assessment certificate (''GCC'') with respect to adult wearing apparel that is exempt from testing under the CPSC's clothing flammability standard.

DATES: Effective March 25, 2016.

FOR FURTHER INFORMATION CONTACT: Mary Toro, Director, Division of Regulatory Enforcement, Office of Compliance, U.S. Consumer Product Safety Commission, 4330 East-West Highway, Bethesda, MD 20814; telephone: (301)–504–7586 email: *mtoro@cpsc.gov*.

SUPPLEMENTARY INFORMATION:

A. Background

The Consumer Product Safety Improvement Act (''CPSIA'') was enacted on August 14, 2008 (Pub. L. 110–314). Section 102(A) of the CPSIA requires that all manufacturers of consumer products subject to a rule, standard, or ban enforced by the CPSC issue a general conformity certificate (''GCC'') certifying that ''based on a test of each product or upon a reasonable testing program, that such product complies with all rules, bans, standards, or regulations applicable to the product.'' [1]

B. Flammable Fabrics Act and Related Regulations

In 1953, Congress enacted the Flammable Fabrics Act (''FFA'') in response to a number of serious injuries and deaths resulting from burns associated with garments made from high-pile rayon.[2] The clothing flammability standard at 16 CFR part 1610 (''1610'' or ''the Standard'') provides for classification of various types of fabrics and describes in detail the test method to determine flammability.

Section 1610.1(c) excepts from the flammability standard certain hats, gloves, footwear, and interlining fabrics. Because this section specifically says that the ''standard shall not apply to'' these articles, they are not ''subject to'' a rule, standard, or ban under section 102(a) of the CPSIA, and therefore manufacturers and importers are neither subject to the regulation nor required to produce a GCC for these products.

Section 1610.1(d), conversely, exempts from *testing,* but not from the standard as a whole, garments made entirely from certain fabrics that the Commission has consistently found not to be flammable. These include:

(1) Plain surface fabrics, regardless of fiber content, weighing 2.6 ounces per square yard or more; and

(2) All fabrics, both plain surface and raised-fiber surface textiles, regardless of weight, made entirely from any of the following fibers or entirely from combination of the following fibers: Acrylic, modacrylic, nylon, olefin, polyester, wool.

Because products made from these fabrics are exempt from testing but *not* excepted from the standard as a whole, they are still ''subject to'' a rule, standard, or ban and manufacturers and importers of these exempted products have been required to issue a GCC.

C. Rationale for Enforcement Discretion

Experience gained from years of testing in accordance with 16 CFR part 1610 demonstrates that the exempted fabrics referenced above consistently yield acceptable results when tested in accordance with the Standard. This experience allowed an exemption from testing in the Standard, for the purpose of issuing guaranties.[3] The Standard allows persons or firms issuing an initial guaranty of any of the referenced fabrics, or of products made entirely from one or more of these fabrics, an exemption from any requirement for testing to support guaranties of those fabrics.

Certificates of compliance for children's products and other consumer products regulated by the Commission serve many vital purposes, not least of which is to assure our compliance staff that these goods have met the testing requirements set forth in our rules. Adult apparel is rarely, if ever, subject to more than one CPSC regulation. Many retailers are issuing GCCs simply noting an exemption from testing to the Standard. The Commission believes the issuance of GCCs for these products is not necessary for CPSC staff to enforce the Standard because the Commission has granted a testing exemption to these fabrics and adult apparel made from these fabrics is unlikely to be subject to other consumer product safety rules, standards, or bans. This proposal provides an opportunity to reduce costs to manufacturers and importers without affecting consumer safety.

D. Statement of Policy

The Commission votes to exercise the following enforcement discretion: Effective March 25, 2016, the Commission will not pursue compliance or enforcement actions against manufacturers, importers or private labelers for failure to certify or to issue, provide or make available to the Commission a general conformity certificate as required by 15 U.S.C. 2063(a)(1) with respect to adult wearing apparel that is exempt from testing pursuant to 16 CFR 1610.1(d).

E. Limitations of Enforcement Discretion

The intent of this enforcement discretion should be read narrowly within its precise terms. The Commission will use enforcement discretion only for *certificate* violations related to the indicated product category. *These products must still comply with all flammability requirements under the FFA; failure to comply with flammability standards will still subject the products to enforcement action.*

Further, this enforcement discretion does not apply to any adult wearing apparel that does not fit the specific testing exemptions provided for in 16 CFR 1610.1(d). For example, if a manufacturer produced a garment made from a plain surface silk fabric that weighs *less* than 2.6 ounces per square yard, that garment would not fall within the exemption, and the manufacturer would still be expected to produce a GCC. Should the Commission become aware of unsafe products entering the market as a result of this statement of policy, it reserves the right to withdraw the policy prospectively with no less than 90 days' notice.

This statement of policy, and the enforcement discretion described herein, is limited to certificates required for adult wearing apparel that is exempt from testing pursuant to 16 CFR

[1] 122 Stat. at 3022, 102(a).

[2] Floyd B. Oglesbay, *The Flammable Fabrics Problem,* 44 Pediatrics 827 (1969), *available at http://www.ncbi.nlm.nih.gov/pmc/articles/PMC1730418/pdf/v004p00317.pdf.*

[3] 16 CFR 1610.1(d).

1610.1(d). If the adult wearing apparel is not exempt from testing under 16 CFR 1610.1(d), none of this policy, the enforcement discretion described in this policy nor the implications of such enforcement discretion shall apply. In addition, any misrepresentation or omission regarding the applicable facts or application of 16 CFR 1610.1(d) under the circumstances could subject the applicable firm to applicable compliance or enforcement action and potential civil and/or criminal penalties.

The Commission's exercise of the enforcement discretion described in this policy is not intended to, does not and may not be relied upon to create any right or benefit, substantive or procedural, enforceable at law by any party against the CPSC or otherwise against the United States government.

Dated: February 26, 2016.

Todd A. Stevenson,

Secretary, Consumer Product Safety Commission.

[FR Doc. 2016–04533 Filed 3–9–16; 8:45 am]

BILLING CODE 6355–01–P

DEPARTMENT OF HOMELAND SECURITY

Coast Guard

33 CFR Part 165

[Docket Number USCG–2016–0155]

RIN 1625–AA00

Safety Zone; Upper Mississippi River 321.4 to 321.6; Quincy, IL

AGENCY: Coast Guard, DHS.

ACTION: Temporary final rule.

SUMMARY: The Coast Guard is establishing a temporary safety zone for all waters of the Upper Mississippi River (UMR) from mile 321.4 to mile 321.6. The safety zone is needed to protect persons, property, and infrastructure from potential damage and safety hazards associated with work being completed on new power lines across the river. Entry of vessels or persons into this zone is prohibited unless specifically authorized by the Captain of the Port (COTP). Deviation from the safety zone may be requested and will be considered on a case-by-case basis as specifically authorized by the COTP or a designated representative.

DATES: This rule is effective from 7:00 a.m. until 5:00 p.m. daily beginning on March 21, 2016 through April 1, 2016.

ADDRESSES: To view documents mentioned in this preamble as being available in the docket, go to *http://www.regulations.gov,* type USCG–2016–0155 in the ''SEARCH'' box and click ''SEARCH.'' Click on Open Docket Folder on the line associated with this rule.

FOR FURTHER INFORMATION CONTACT: If you have questions on this rule, call or email LCDR Sean Peterson, Chief of Prevention, U.S. Coast Guard; telephone 314–269–2332, email *Sean.M.Peterson@uscg.mil.*

SUPPLEMENTARY INFORMATION:

I. Table of Abbreviations

BNM Broadcast Notice to Mariners
CFR Code of Federal Regulations
COTP Captain of the Port
DHS Department of Homeland Security
FR Federal Register
NPRM Notice of proposed rulemaking
§ Section
UMR Upper Mississippi River
U.S.C. United States Code

II. Background Information and Regulatory History

The Coast Guard is issuing this temporary rule without prior notice and opportunity to comment pursuant to authority under section 4(a) of the Administrative Procedure Act (APA) (5 U.S.C. 553(b)). This provision authorizes an agency to issue a rule without prior notice and opportunity to comment when the agency finds good cause that those procedures are ''impracticable, unnecessary, or contrary to the public interest.'' Under 5 U.S.C. 553(b)(B), the Coast Guard finds that good cause exists for not publishing a notice of proposed rulemaking (NPRM) with respect to this rule because Ameren notified the Coast Guard on February 17, 2016, that this work will require helicopters to stretch the power lines across the river. Due to the risks associated with this work crossing the navigable channel, a closure is needed. It would be impracticable to publish a NPRM because the safety zone must be established beginning March 21, 2016. Broadcast Notices to Mariners (BNM) and information sharing with waterway users will update mariners of the safety zone and enforcement times during the operations.

We are issuing this rule, and under 5 U.S.C. 553(d)(3), the Coast Guard finds that good cause exists for making it effective less than 30 days after publication in the **Federal Register**. Providing 30 days notice would be impracticable because immediate action is needed to protect vessels from the hazards associated with the rope crossing the navigable channel.

III. Legal Authority and Need for Rule

The Coast Guard is issuing this rule under authority in 33 U.S.C. 1231. The COTP UMR has determined that potential hazards associated with using helicopters to stretch power lines across the navigational channel presents safety concerns for anyone within this limited area of the UMR. This rule provides additional safety measures, to protect persons and vessels, in the form of a safety zone from mile 321.4 to mile 321.6 on the UMR to protect those in the area and for the Coast Guard to maintain navigational safety.

IV. Discussion of the Rule

The Coast Guard is establishing a temporary safety zone prohibiting access to the UMR from mile 321.4 to mile 321.6, extending the entire width of the river from 7:00 a.m. until 5:00 p.m. daily beginning on March 21, 2016 and scheduled to end on April 1, 2016, or until conditions allow for safe navigation, whichever occurs earlier. Deviation from the safety zone may be requested and will be considered on a case-by-case basis as specifically authorized by the COTP or a designated representative. The COTP may be contacted by telephone at 314–269–2332 or can be reached by VHF–FM channel 16.

V. Regulatory Analyses

We developed this rule after considering numerous statutes and Executive Orders related to rulemaking. Below we summarize our analyses based on a number of these statutes and Executive Orders, and we discuss First Amendment rights of protestors.

A. Regulatory Planning and Review

Executive Orders 12866 and 13563 direct agencies to assess the costs and benefits of available regulatory alternatives and, if regulation is necessary, to select regulatory approaches that maximize net benefits. Executive Order 13563 emphasizes the importance of quantifying both costs and benefits, of reducing costs, of harmonizing rules, and of promoting flexibility. This rule has not been designated a ''significant regulatory action,'' under Executive Order 12866. Accordingly, it has not been reviewed by the Office of Management and Budget. This rule establishes a temporary safety zone limiting access to the UMR from mile 321.4 to mile 321.6. Notifications of enforcement times will be communicated to the marine community via BNM. The impacts on navigation will be limited to ensure the safety of mariners and vessels during the period that the helicopters will be pulling the power lines across the navigational channel. Deviation requests

will be reviewed and considered on a case-by-case basis.

B. Impact on Small Entities

The Regulatory Flexibility Act of 1980, 5 U.S.C. 601–612, as amended, requires Federal agencies to consider the potential impact of regulations on small entities during rulemaking. The term ''small entities'' comprises small businesses, not-for-profit organizations that are independently owned and operated and are not dominant in their fields, and governmental jurisdictions with populations of less than 50,000. The Coast Guard certifies under 5 U.S.C. 605(b) that this rule will not have a significant economic impact on a substantial number of small entities.

While some owners or operators of vessels intending to transit the safety zone may be small entities, for the reasons stated in section V.A. above, this rule will not have a significant economic impact on any vessel owner or operator.

Under section 213(a) of the Small Business Regulatory Enforcement Fairness Act of 1996 (Pub. L. 104–121), we want to assist small entities in understanding this rule. If the rule would affect your small business, organization, or governmental jurisdiction and you have questions concerning its provisions or options for compliance, please contact the person listed in the **FOR FURTHER INFORMATION CONTACT** section.

Small businesses may send comments on the actions of Federal employees who enforce, or otherwise determine compliance with, Federal regulations to the Small Business and Agriculture Regulatory Enforcement Ombudsman and the Regional Small Business Regulatory Fairness Boards. The Ombudsman evaluates these actions annually and rates each agency's responsiveness to small business. If you wish to comment on actions by employees of the Coast Guard, call 1–888–REG–FAIR (1–888–734–3247). The Coast Guard will not retaliate against small entities that question or complain about this rule or any policy or action of the Coast Guard.

C. Collection of Information

This rule will not call for a new collection of information under the Paperwork Reduction Act of 1995 (44 U.S.C. 3501–3520).

D. Federalism and Indian Tribal Governments

A rule has implications for federalism under Executive Order 13132, Federalism, if it has a substantial direct effect on the States, on the relationship between the national government and the States, or on the distribution of power and responsibilities among the various levels of government. We have analyzed this rule under that Order and have determined that it is consistent with the fundamental federalism principles and preemption requirements described in Executive Order 13132.

Also, this rule does not have tribal implications under Executive Order 13175, Consultation and Coordination with Indian Tribal Governments, because it does not have a substantial direct effect on one or more Indian tribes, on the relationship between the Federal Government and Indian tribes, or on the distribution of power and responsibilities between the Federal Government and Indian tribes. If you believe this rule has implications for federalism or Indian tribes, please contact the person listed in the **FOR FURTHER INFORMATION CONTACT** section above.

E. Unfunded Mandates Reform Act

The Unfunded Mandates Reform Act of 1995 (2 U.S.C. 1531–1538) requires Federal agencies to assess the effects of their discretionary regulatory actions. In particular, the Act addresses actions that may result in the expenditure by a State, local, or tribal government, in the aggregate, or by the private sector of $100,000,000 (adjusted for inflation) or more in any one year. Though this rule will not result in such an expenditure, we do discuss the effects of this rule elsewhere in this preamble.

F. Environment

We have analyzed this rule under Department of Homeland Security Management Directive 023–01 and Commandant Instruction M16475.lD, which guide the Coast Guard in complying with the National Environmental Policy Act of 1969 (42 U.S.C. 4321–4370f), and have determined that this action is one of a category of actions that do not individually or cumulatively have a significant effect on the human environment. This rule involves a safety zone on the UMR from mile 321.4 to mile 321.6. It is categorically excluded from further review under paragraph 34(g) of Figure 2–1 of the Commandant Instruction. An environmental analysis checklist supporting this determination and a Categorical Exclusion Determination are available in the docket where indicated under **ADDRESSES**. We seek any comments or information that may lead to the discovery of a significant environmental impact from this rule.

G. Protest Activities

The Coast Guard respects the First Amendment rights of protesters. Protesters are asked to contact the person listed in the **FOR FURTHER INFORMATION CONTACT** section to coordinate protest activities so that your message can be received without jeopardizing the safety or security of people, places or vessels.

List of Subjects in 33 CFR Part 165

Harbors, Marine safety, Navigation (water), Reporting and recordkeeping requirements, Security measures, Waterways.

For the reasons discussed in the preamble, the Coast Guard amends 33 CFR part 165 as follows:

PART 165—REGULATED NAVIGATION AREAS AND LIMITED ACCESS AREAS

■ 1. The authority citation for part 165 continues to read as follows:

Authority: 33 U.S.C. 1231; 50 U.S.C. 191; 33 CFR 1.05–1, 6.04–1, 6.04–6, and 160.5; Department of Homeland Security Delegation No. 0170.1.

■ 2. Add § 165.T08–0155 to read as follows:

§ 165.T08–0155 Safety Zone; Upper Mississippi River 321.4 to 321.6; Quincy, IL.

(a) *Location.* The following area is a safety zone: All waters of the Upper Mississippi River mile 321.4 to 321.6, extending the entire width of the river.

(b) *Definitions.* As used in this section, *designated representative* means a Coast Guard Patrol Commander, including a Coast Guard coxswain, petty officer, or other officer operating a Coast Guard vessel and a Federal, State, and local officer designated by or assisting the Captain of the Port Upper Mississippi River (COTP) in the enforcement of the safety zone.

(c) *Regulations.* (1) Under the general safety zone regulations in subpart C of this part, you may not enter the safety zone described in paragraph (a) of this section unless authorized by the COTP or the COTP's designated representative.

(2) To seek permission to enter, contact the COTP or the COTP's representative via VHF–FM channel 16, or through Coast Guard Sector Upper Mississippi River at 314–269–2332. Those in the safety zone must comply with all lawful orders or directions given to them by the COTP or the COTP's designated representative.

(d) *Effective and enforcement period.* This rule is effective and will be enforced from 7:00 a.m. until 5:00 p.m. daily beginning on March 21, 2016 through April 1, 2016.

Dated: March 3, 2016.

M.L. Malloy,

Captain, U.S. Coast Guard, Captain of the Port Upper Mississippi River.

[FR Doc. 2016–05388 Filed 3–9–16; 8:45 am]

BILLING CODE 9110–04–P

DEPARTMENT OF AGRICULTURE

Forest Service

36 CFR Part 242

DEPARTMENT OF THE INTERIOR

Fish and Wildlife Service

50 CFR Part 100

[Docket No. FWS–R7–SM–2015–0156; FXRS12610700000–156–FF07J00000; FBMS #4500087231]

RIN 1018–BA82

Subsistence Management Regulations for Public Lands in Alaska; Rural Determinations, Nonrural List

AGENCY: Forest Service, Agriculture; Fish and Wildlife Service, Interior.

ACTION: Affirmation of direct final rule.

SUMMARY: The Federal Subsistence Board is adopting, without change, a direct final rule that revised the list of areas in Alaska determined to be nonrural for purposes of the Federal Subsistence Program to the list that existed prior to 2007. Accordingly, the community of Saxman and the area of Prudhoe Bay were removed from the nonrural list. The following areas continue to be nonrural, but their boundaries returned to their previous borders: The Kenai Area; the Wasilla/Palmer area; the Homer area; and the Ketchikan area. Because we received no substantive adverse comments on the direct final rule, it is now effective.

DATES: The direct final rule published at 80 FR 68245 on November 4, 2015, was effective December 21, 2015.

ADDRESSES: The direct final rule may be found online at *www.regulations.gov* in Docket No. FWS–R7–SM–2015–0156.

FOR FURTHER INFORMATION CONTACT: Chair, Federal Subsistence Board, c/o U.S. Fish and Wildlife Service, Attention: Eugene R. Peltola, Jr., Office of Subsistence Management; (907) 786–3888 or *subsistence@fws.gov.* For questions specific to National Forest System lands, contact Thomas Whitford, Regional Subsistence Program Leader, USDA, Forest Service, Alaska Region; (907) 743–9461 or *twhitford@fs.fed.us.*

SUPPLEMENTARY INFORMATION:

Background

Under Title VIII of the Alaska National Interest Lands Conservation Act (ANILCA) (16 U.S.C. 3111–3126), the Secretary of the Interior and the Secretary of Agriculture (Secretaries) jointly implement the Federal Subsistence Management Program (Program). This program provides a preference for take of fish and wildlife resources for subsistence uses on Federal public lands and waters in Alaska. Only residents of areas identified as rural are eligible to participate in the Program on Federal public lands in Alaska. Because this program is a joint effort between Interior and Agriculture, these regulations are located in two titles of the Code of Federal Regulations (CFR): Title 36, ''Parks, Forests, and Public Property,'' and Title 50, ''Wildlife and Fisheries,'' at 36 CFR 242.1–242.28 and 50 CFR 100.1–100.28, respectively.

Consistent with these regulations, the Secretaries established a Federal Subsistence Board (Board) comprising Federal officials and public members to administer the Program. One of the Board's responsibilities is to determine which communities or areas of the State are nonrural. The Secretaries also divided Alaska into 10 subsistence resource regions, each of which is represented by a Regional Advisory Council (Council). The Council members represent varied geographical, cultural, and user interests within each region. The Councils provide a forum for rural residents with personal knowledge of local conditions and resource requirements to have a meaningful role in the subsistence management of fish and wildlife on Federal public lands in Alaska.

Related Rulemaking

The Secretaries published a final rule (80 FR 68249; November 4, 2015) that sets forth a new process by which the Board will make rural determinations (''Subsistence Management Regulations for Public Lands in Alaska; Rural Determination Process'').

Until promulgation of the rule mentioned above, Federal subsistence regulations at 36 CFR 242.15 and 50 CFR 100.15 had required that the rural or nonrural status of communities or areas be reviewed every 10 years, beginning with the availability of the 2000 census data. In addition, criteria for aggregation of communities and population thresholds were listed. On May 7, 2007, the Board published a final rule that revised the list of nonrural areas (72 FR 25688), and the rule included a compliance date of May 7, 2012.

On October 23, 2009, Secretary of the Interior Ken Salazar announced the initiation of a Departmental review of the Federal Subsistence Management Program in Alaska; Secretary of Agriculture Tom Vilsack later concurred with this course of action. The Secretaries announced the findings of the review, which included several proposed administrative and regulatory reviews and/or revisions to strengthen the Program and make it more responsive to those who rely on it for their subsistence uses. One proposal called for a review, with Council input, of the rural determination process and, if needed, recommendations for regulatory changes.

The Board met on January 20, 2012, and, among other things, decided to extend the compliance date of its 2007 final rule on rural determinations. A final rule published March 1, 2012 (77 FR 12477), that extended the compliance date until either the rural determination process and findings review were completed or 5 years, whichever came first. The 2007 regulations have remained in titles 36 and 50 of the CFR unchanged since their effective date.

The Board followed that action with a request for comments and announcement of public meetings (77 FR 77005; December 31, 2012) to receive public, Tribal, and Alaska Native Corporation input on the rural determination process. At their fall 2013 meetings, the Councils provided a public forum to hear from residents of their regions, deliberate on the rural determination process, and provide recommendations for changes to the Board. The Board also held hearings in Barrow, Ketchikan, Sitka, Kodiak, Bethel, Anchorage, Fairbanks, Kotzebue, Nome, and Dillingham to solicit comments on the rural determination process, and public testimony was recorded. Government-to-government tribal consultations on the rural determination process were held between members of the Board and Federally recognized Tribes of Alaska. Additional consultations were held between members of the Board and Alaska Native Corporations.

Altogether, the Board received 475 substantive comments from various sources, including individuals, members of the Councils, and other entities or organizations, such as Alaska Native Corporations and borough governments. In general, this information indicated a broad dissatisfaction with the current rural determination process.

Based on this information, the Board, at their public meeting held on April 17, 2014, elected to recommend a simplification of the process by determining which areas or communities are nonrural in Alaska; all other communities or areas would, therefore, be rural. The Board would make nonrural determinations using a comprehensive approach that considers population size and density, economic indicators, military presence, industrial facilities, use of fish and wildlife, degree of remoteness and isolation, and any other relevant material, including information provided by the public. The Board would rely heavily on the recommendations of the Councils. The Board developed a proposal that simplifies the process of rural determinations and submitted its recommendation to the Secretaries on August 15, 2014.

On November 24, 2014, the Secretaries requested that the Board initiate rulemaking to pursue the regulatory changes recommended by the Board.

The Departments published a proposed rule on January 28, 2015 (80 FR 4521), to revise the regulations governing the rural determination process in subpart B of 36 CFR part 242 and 50 CFR part 100. Following a process that involved substantial Council and public input, the Departments published the final rule on November 4, 2015 (80 FR 68249).

Direct Final Rule

During the rulemaking process, the Board went on to address a starting point for nonrural communities and areas.

Since the 2007 final rule (72 FR 25688; May 7, 2007) was contentious, and so many comments were received objecting to the changes imposed by that rule, the Board decided to return to the rural determinations prior to the 2007 final rule. The Board further decided that the most expedient method to enact their decisions was to publish a direct final rule adopting the pre-2007 nonrural determinations. As a result, the Board determined the following areas to be nonrural: Fairbanks North Star Borough; Homer area—including Homer, Anchor Point, Kachemak City, and Fritz Creek; Juneau area—including Juneau, West Juneau, and Douglas; Kenai area—including Kenai, Soldotna, Sterling, Nikiski, Salamatof, Kalifornsky, Kasilof, and Clam Gulch; Ketchikan area—including Ketchikan City, Clover Pass, North Tongass Highway, Ketchikan East, Mountain Point, Herring Cove, Saxman East, Pennock Island, and parts of Gravina Island; Municipality of Anchorage; Seward area—including Seward and Moose Pass, Valdez; and Wasilla area—including Palmer, Wasilla, Sutton, Big Lake, Houston, and Bodenberg Butte.

While the Board received one comment on the direct final rule during the public comment period provided, the comment was not specific to the issues raised in this rulemaking action. Therefore, because the comment had no bearing on whether the new rule should become effective or the 2007 rule should remain in place, the direct final rule became effective December 21, 2015, as specified in that rule.

Authority

This rule is issued under the authority of Title VIII of the Alaska National Interest Lands Conservation Act (ANILCA) (16 U.S.C. 3111–3126).

List of Subjects

36 CFR Part 242

Administrative practice and procedure, Alaska, Fish, National forests, Public lands, Reporting and recordkeeping requirements, Wildlife.

50 CFR Part 100

Administrative practice and procedure, Alaska, Fish, National forests, Public lands, Reporting and recordkeeping requirements, Wildlife.

PART____—SUBSISTENCE MANAGEMENT REGULATIONS FOR PUBLIC LANDS IN ALASKA

Accordingly, the Board is affirming as a final rule, without change, the direct final rule amending 36 CFR part 242 and 50 CFR part 100 that was published at 80 FR 68245 on November 4, 2015.

Authority: 16 U.S.C. 3, 472, 551, 668dd, 3101–3126; 18 U.S.C. 3551–3586; 43 U.S.C. 1733.

Dated: February 16, 2016.

Eugene R. Peltola, Jr.,

Assistant Regional Director, U.S. Fish and Wildlife Service, Acting Chair, Federal Subsistence Board.

Dated: February 18, 2016.

Thomas Whitford,

Subsistence Program Leader, USDA-Forest Service.

[FR Doc. 2016–05317 Filed 3–9–16; 8:45 am]

BILLING CODE 4333–15–3410–11–P

ENVIRONMENTAL PROTECTION AGENCY

40 CFR Part 52

[EPA–R05–OAR–2014–0658; FRL–9943–46–Region 5]

Air Plan Approval; Ohio; Base Year Emission Inventories for the 2008 8-Hour Ozone Standard

AGENCY: Environmental Protection Agency (EPA).

ACTION: Direct final rule.

SUMMARY: The Environmental Protection Agency (EPA) is approving, under the Clean Air Act (CAA), a State Implementation Plan (SIP) revision submitted by the Ohio Environmental Protection Agency (OEPA) on July 18, 2014, to address emission inventory requirements for the Cleveland-Akron-Lorain, Ohio (OH) and Columbus, OH ozone nonattainment areas and for the Ohio portion of the Cincinnati, Ohio-Kentucky-Indiana ozone nonattainment area under the 2008 ozone National Ambient Air Quality Standard (NAAQS or standard). The CAA requires emission inventories for all ozone nonattainment areas. The emission inventories contained in Ohio's July 18, 2014, submission meet this CAA requirement. EPA is also confirming that the state of Ohio has acceptable stationary source annual emission statement regulations, which have been previously approved by EPA.

DATES: This direct final rule will be effective May 9, 2016, unless EPA receives adverse comments by April 11, 2016. If adverse comments are received by EPA, EPA will publish a timely withdrawal of the direct final rule in the **Federal Register** informing the public that the rule will not take effect.

ADDRESSES: Submit your comments, identified by Docket ID No. EPA–R05–OAR–2014–0658 at *http://www.regulations.gov* or via email to *Aburano.Douglas@epa.gov.* For comments submitted at Regulations.gov, follow the online instructions for submitting comments. Once submitted, comments cannot be edited or removed from Regulations.gov. For either manner of submission, EPA may publish any comment received to its public docket. Do not submit electronically any information you consider to be Confidential Business Information (CBI) or other information whose disclosure is restricted by statute. Multimedia submissions (audio, video, etc.) must be accompanied by a written comment. The written comment is considered the official comment and should include discussion of all points you wish to

make. EPA will generally not consider comments or comment contents located outside of the primary submission (*i.e.* on the web, cloud, or other file sharing system). For additional submission methods, please contact the person identified in the **FOR FURTHER INFORMATION CONTACT** section. For the full EPA public comment policy, information about CBI or multimedia submissions, and general guidance on making effective comments, please visit *http://www2.epa.gov/dockets/commenting-epa-dockets.*

FOR FURTHER INFORMATION CONTACT: Edward Doty, Attainment Planning and Maintenance Section, Air Programs Branch (AR–18J), Environmental Protection Agency, Region 5, 77 West Jackson Boulevard, Chicago, Illinois 60604, (312) 886–6057, *Doty.Edward@epa.gov.*

SUPPLEMENTARY INFORMATION: Throughout this document, whenever ''we,'' ''us,'' or ''our'' is used, we mean EPA. This supplementary information section is arranged as follows:

I. The 2008 Ozone NAAQS and Emission Inventory Requirements
II. Ohio's Emission Inventories
A. Base Year
B. How did the State develop the emission inventories?
C. Source Emission Statements
III. EPA's Evaluation
A. Did the state adequately document the derivation of the emission estimates?
B. Did the State quality assure the emission estimates?
C. Did the State provide for public review of the requested SIP revision?
IV. Final Action
V. Statutory and Executive Order Reviews

I. The 2008 Ozone NAAQS and Emission Inventory Requirements

On March 12, 2008, EPA promulgated a revised 8-hour ozone NAAQS of 0.075 parts per million (ppm). See 73 FR 16436 (March 27, 2008). The Cleveland-Akron-Lorain, Columbus, and Cincinnati areas were designated as marginal nonattainment areas for the 2008 ozone NAAQS. See 77 FR 30088 (May 21, 2012). The Cleveland-Akron-Lorain nonattainment area includes Ashtabula, Cuyahoga, Geauga, Lake, Lorain, Medina, Portage, and Summit Counties. The Columbus nonattainment area includes Delaware, Fairfield, Franklin, Knox, Licking, and Madison Counties. The Ohio portion of the Cincinnati nonattainment area includes Butler, Clermont, Clinton, Hamilton, and Warren Counties.

CAA sections 172(c)(3) and 182(a)(1), 42 U.S.C. 7502(c)(3) and 7511a(a)(1), require states to develop and submit, as SIP revisions, emission inventories for all areas designated as nonattainment for any NAAQS, including the ozone NAAQS. An emission inventory for ozone is an estimation of actual emissions of air pollutants that contribute to the formation of ozone in an area. Ozone is a gas that is formed by the reaction of Volatile Organic Compounds (VOC) and Oxides of Nitrogen (NO_X) in the atmosphere in the presence of sunlight (VOC and NO_X are referred to as ozone precursors). Therefore, an emission inventory for ozone focuses on the emissions of VOC and NO_X. VOC is emitted by many types of pollution sources, including power plants, industrial sources, on-road and off-road mobile sources, smaller stationary sources, collectively referred to as area sources, and biogenic sources.[1] NO_X is primarily emitted by combustion sources, both stationary and mobile.

Emission inventories provide emissions data for a variety of air quality planning tasks, including establishing baseline emission levels (anthropogenic [manmade] emissions associated with ozone standard violations), calculating emission reduction targets needed to attain the NAAQS and to achieve reasonable further progress toward attainment of the ozone standard (not required in the areas considered here), determining emission inputs for ozone air quality modeling analyses, and tracking emissions over time to determine progress toward achieving air quality and emission reduction goals. As stated above, the CAA requires the states to submit emission inventories for areas designated as nonattainment for ozone. For the 2008 ozone NAAQS, EPA has recommended that states submit typical summer day emission estimates for 2011 (78 FR 34178, 34190, June 6, 2013). However, EPA also allows states to submit base year emissions for other years during a recent ozone standard violation period. States are required to submit estimates of VOC and NO_X emissions for four general classes of anthropogenic sources: stationary point sources; area sources; on-road mobile sources; and off-road mobile sources.

II. Ohio's Emission Inventories

On July 18, 2014, Ohio submitted a SIP revision addressing the VOC and NO_X emission inventory requirement for the Cleveland-Akron-Lorain and Columbus ozone nonattainment areas and for the Ohio portion of the Cincinnati ozone nonattainment area. Tables 1, 2, and 3 summarize the 2008 VOC and NO_X emissions for these three areas for a typical summer day (reflective of the summer period, when the highest ozone concentrations are expected in these nonattainment areas). The following acronyms are used in the emissions tables: Electric Generating Units (EGU); and Commercial Marine–Airplanes–Railroads (MAR).[2]

TABLE 1—CLEVELAND AREA 2008 EMISSION INVENTORY

[tons per day]

Source type	VOC	NO_X
Non-EGU Point	19.97	16.31
EGU Point	0.20	65.47
Area	96.81	12.71
On-Road Mobile	106.55	209.68
Off-Road Mobile	142.40	70.86
MAR	1.24	25.65
Totals	367.17	400.69

[1] Biogenic emissions are produced by living organisms and are typically not included in the base year emission inventories, but are considered in ozone modeling analyses, which must consider all emissions in a modeled area.

[2] MAR sources are not covered by the off-road mobile source emissions model used by the state. Ohio has relied on MAR emissions calculated and supplied through contractors, as discussed elsewhere in this rulemaking.

TABLE 2—COLUMBUS AREA 2008 EMISSION INVENTORY

[tons per day]

Source type	VOC	NO_X
Non-EGU Point	2.73	7.56
EGU Point	0.00	0.00
Area	57.78	6.02
On-Road Mobile	123.41	231.72
Off-Road Mobile	38.06	40.72
MAR	0.37	6.79
Totals	222.35	292.81

TABLE 3—CINCINNATI AREA [3] 2008 EMISSION INVENTORY

(tons per day)

Source Type	VOC	NO_X
Non-EGU Point	5.76	24.33
EGU Point	0.81	99.35
Area	54.25	7.17
On-Road Mobile	57.79	105.98
Off-Road Mobile	34.59	34.34
MAR	0.42	9.29
Totals	153.62	280.46

A. Base Year

OEPA chose 2008 as the base year for these emission inventories. Although EPA recommends the use of 2011 as the base year, as noted above, EPA also allows the consideration of other base years. OEPA chose 2008 because this is one of the three years, 2008 through 2010, of ozone data indicating violation of the ozone standard that were used to designate the three areas as nonattainment for the 2008 ozone standard.

B. How did the State develop the emission inventories?

OEPA estimated VOC and NO_X emissions for each county in the Cleveland-Akron-Lorain and Columbus ozone nonattainment areas and for the Ohio portion of the Cincinnati ozone nonattainment area. Emissions for the counties were totaled by source category for each ozone nonattainment area. To develop the VOC and NO_X emission inventories, OEPA used the procedures summarized below.

The primary source of emissions data for non-EGU point sources was source-reported 2008 Emission Inventory Statements (EISs). Under the authority of Ohio Administrative Code (OAC) 3756–15–03, OEPA requires regulated stationary sources in the ozone nonattainment areas to submit EISs annually. An EIS contains detailed source type-specific or source unit-specific annual and seasonal actual emissions for all source units in a facility. The EIS data for all applicable facilities were used to calculate annual and summer day county-specific point source emissions. Because they are determinative, only the summer day emissions are summarized here.

EGU point source emissions were obtained from EPA's Clean Air Markets Division (CAMD). CAMD collects and processes EGU emissions nationally.

For all point sources, OEPA has provided a detailed list of major point source facilities and their associated annual and summer day VOC and NO_X emissions within appendices C and D of their July 18, 2014, submittal.

For the area source emissions, OEPA relied on source type-specific emissions and emission factors provided by the Eastern Regional Technical Advisory Committee (ERTAC). Ohio and other states formed ERTAC to provide technical assistance in the analysis of air pollution. ERTAC defined the emission inventory source categories and derived the emission factors for each source category. ERTAC also derived the county-specific source activity levels for 2008 and provided these data to participating states.[4] For some source categories, OEPA developed alternate methodologies, and/or subtracted point source emissions to avoid double-counting of emissions. In addition, some national emissions data obtained from EPA were allocated to county-specific emission levels based on local-to-national ratios of source activity levels.

In appendix F of the July 18, 2014, submittal, OEPA has documented area source emissions by Source Category Code (SCC) and county. In the July 18, 2014, submittal, OEPA has provided a detailed discussion of how the emissions were derived for each source category.

On-road mobile source emissions were estimated using EPA's Motor Vehicle Emission Simulator 2010b (MOVES2010b) model and Vehicle Miles Travelled (VMT) data supplied by the Cleveland, Columbus, and Cincinnati metropolitan planning organizations (MPOs). The MOVES2010b model was run using area-specific input data, where available, and national average default data where area-specific data were not available. The MPOs' VMT data were derived for a typical summer day. Appendix G of the July 18, 2014, submittal thoroughly documents the calculation and spatial allocation of the on-road mobile source emissions.

Off-road mobile source emissions were estimated using EPA's National Mobile Inventory Model (NMIM). The emission estimates were processed through the Consolidated Community Emissions Processing Tool (CONCEPT) to spatially allocate the emissions to the county levels.

Because NMIM does not address MAR emissions, MAR emissions were

[3] Ohio portion only.

[4] The county-specific area source emissions by source category were determined by multiplying the source category emission factor by the county-specific activity level.

separately estimated through contractor studies. These emission estimates were derived using county-specific activity levels and EPA-supplied emission factors. The calculated emissions were spatially allocated using CONCEPT.

OEPA applied standardized, EPA-recommended procedures and data completeness checks to quality assure (QA) (to assure data accuracy) and quality check (QC) (to assure data completeness) the emission calculations.

C. Source Emission Statements

Section 182(a)(3)(B) of the CAA requires states to include regulations in the SIP to require sources (source facilities) to submit annual statements characterizing sources of VOC and NO_X emission within the source facilities and to report actual VOC and NO_X emissions for these sources. As noted above, OEPA has authority under OAC 3745–15–03 to require NO_X and VOC EIS submittals for regulated source facilities in the ozone nonattainment areas that emit greater than or equal to 25 tons/year of VOC or NO_X during the reporting year. The EPA approved this rule into the Ohio SIP on September 27, 2007 (72 FR 54844). OEPA confirmed in the July 18, 2014, submittal that this approved SIP regulation remains in place and remains enforceable for the 2008 ozone standard.

III. EPA's Evaluation

EPA has reviewed Ohio's July 18, 2014, requested SIP revision for consistency with CAA and EPA emission inventory requirements. In particular, EPA has reviewed the techniques used by OEPA to derive and quality assure the emission estimates. EPA has also determined whether Ohio has provided the public with the opportunity to review and comment on the development of the emission estimates and the confirmation that source facility emission statements are required for the 2008 ozone standard and whether the state has addressed all public comments.

A. Did the State adequately document the derivation of the emission estimates?

OEPA documented the procedures used to estimate the emissions for each of the major source types. The documentation of the emission estimation procedures is very thorough and is adequate for us to determine that Ohio followed acceptable procedures to estimate the emissions.

B. Did the State quality assure the emission estimates?

OEPA developed a quality assurance plan and followed this plan during various phases of the emissions estimation and documentation process to QA and QC the emissions for completeness and accuracy. These quality assurance procedures were summarized in the documentation describing how the emissions totals were developed. The quality assurance procedures have been determined to be adequate and acceptable. We conclude that Ohio has developed inventories of VOC and NO_X emissions that are comprehensive and complete.

C. Did the State provide for public review of the requested SIP revision?

OEPA notified the public of the opportunity for comment both in newspapers and on OEPA's Web site. A public hearing was held on June 24, 2014. No comments on the emission inventories were received.

IV. Final Action

We are approving an Ohio SIP revision submitted to address the ozone-related emission inventory requirements for the Cleveland-Akron-Lorain, Columbus, and Ohio portion of the Cincinnati ozone nonattainment areas for the 2008 ozone NAAQS. The emission inventories we are approving into the SIP are specified in Tables 1, 2, and 3 above. We are approving the emission inventories because they contain comprehensive, accurate, and current inventories of actual emissions for all relevant sources in accordance with CAA sections 172(c)(3) and 182(a), and because Ohio adopted the emission inventories after providing for reasonable public notice and a public hearing. Finally, we are also confirming that Ohio has acceptable and enforceable stationary annual emission statement regulations for the 2008 ozone standard.

We are publishing this action without prior proposal because we view this as a noncontroversial amendment and anticipate no adverse comments. However, in the proposed rules section of this **Federal Register** publication, we are publishing a separate document that will serve as the proposal to approve the state plan if relevant adverse written comments are filed. This rule will be effective May 9, 2016 without further notice unless we receive relevant adverse written comments by April 11, 2016. If we receive such comments, we will withdraw this action before the effective date by publishing a subsequent document that will withdraw the final action. All public comments received will then be addressed in a subsequent final rule based on the proposed action. EPA will not institute a second comment period. Any parties interested in commenting on this action should do so at this time. Please note that, if EPA receives adverse comment on an amendment, paragraph, or section of this rule and if that provision may be severed from the remainder of the rule, EPA may adopt as final those provisions of the rule that are not the subject of an adverse comment. If we do not receive any comments, this action will be effective May 9, 2016.

V. Statutory and Executive Order Reviews

Under the CAA, the Administrator is required to approve a SIP submission that complies with the provisions of the CAA and applicable Federal regulations. 42 U.S.C. 7410(k); 40 CFR 52.02(a). Thus, in reviewing SIP submissions, EPA's role is to approve state choices, provided that they meet the criteria of the CAA. Accordingly, this action merely approves state law as meeting Federal requirements and does not impose additional requirements beyond those imposed by state law. For that reason, this action:

- Is not a ''significant regulatory action'' subject to review by the Office of Management and Budget under Executive Orders 12866 (58 FR 51735, October 4, 1993) and 13563 (76 FR 3821, January 21, 2011);
- Does not impose an information collection burden under the provisions of the Paperwork Reduction Act (44 U.S.C. 3501 *et seq.*);
- Is certified as not having a significant economic impact on a substantial number of small entities under the Regulatory Flexibility Act (5 U.S.C. 601 *et seq.*);
- Does not contain any unfunded mandate or significantly or uniquely affect small governments, as described in the Unfunded Mandates Reform Act of 1995 (Pub. L. 104–4);
- Does not have Federalism implications as specified in Executive Order 13132 (64 FR 43255, August 10, 1999);
- Is not an economically significant regulatory action based on health or safety risks subject to Executive Order 13045 (62 FR 19885, April 23, 1997);
- Is not a significant regulatory action subject to Executive Order 13211 (66 FR 28355, May 22, 2001);
- Is not subject to requirements of Section 12(d) of the National Technology Transfer and Advancement Act of 1995 (15 U.S.C. 272 note) because

application of those requirements would be inconsistent with the CAA; and

• Does not provide EPA with the discretionary authority to address, as appropriate, disproportionate human health or environmental effects, using practicable and legally permissible methods, under Executive Order 12898 (59 FR 7629, February 16, 1994).

In addition, the SIP is not approved to apply on any Indian reservation land or in any other area where EPA or an Indian tribe has demonstrated that a tribe has jurisdiction. In those areas of Indian country, the rule does not have tribal implications and will not impose substantial direct costs on tribal governments or preempt tribal law as specified by Executive Order 13175 (65 FR 67249, November 9, 2000).

The Congressional Review Act, 5 U.S.C. 801 *et seq.,* as added by the Small Business Regulatory Enforcement Fairness Act of 1996, generally provides that before a rule may take effect, the agency promulgating the rule must submit a rule report, which includes a copy of the rule, to each House of the Congress and to the Comptroller General of the United States. EPA will submit a report containing this action and other required information to the U.S. Senate, the U.S. House of Representatives, and the Comptroller General of the United States prior to publication of the rule in the **Federal Register.** A major rule cannot take effect until 60 days after it is published in the **Federal Register.** This action is not a ''major rule'' as defined by 5 U.S.C. 804(2).

Under section 307(b)(1) of the CAA, petitions for judicial review of this action must be filed in the United States Court of Appeals for the appropriate circuit by May 9, 2016. Filing a petition for reconsideration by the Administrator of this final rule does not affect the finality of this action for the purposes of judicial review nor does it extend the time within which a petition for judicial review may be filed, and shall not postpone the effectiveness of such rule or action. Parties with objections to this direct final rule are encouraged to file a comment in response to the parallel notice of proposed rulemaking for this action published in the proposed rules section of today's **Federal Register,** rather than file an immediate petition for judicial review of this direct final rule, so that EPA can withdraw this direct final rule and address the comment in the proposed rulemaking. This action may not be challenged later in proceedings to enforce its requirements. (See section 307(b)(2).)

List of Subjects in 40 CFR Part 52

Environmental protection, Air pollution control, Carbon monoxide, Incorporation by reference, Intergovernmental relations, Nitrogen dioxide, Ozone, Reporting and recordkeeping requirements, Volatile organic compounds.

Dated: February 22, 2016.

Robert A. Kaplan,

Acting Regional Administrator, Region 5.

40 CFR part 52 is amended as follows:

PART 52—APPROVAL AND PROMULGATION OF IMPLEMENTATION PLANS

■ 1. The authority citation for part 52 continues to read as follows:

Authority: 42 U.S.C. 7401 *et seq.*

■ 2. Section 52.1885 is amended by adding paragraph (mm) to read as follows:

§ 52.1885 Control Strategy: Ozone.

* * * * *

(mm) On July 18, 2014, Ohio submitted 2008 volatile organic compounds and oxides of nitrogen emission inventories for the Cleveland-Akron-Lorain and Columbus ozone nonattainment areas and for the Ohio portion of the Cincinnati, Ohio-Kentucky-Indiana ozone nonattainment areas as revisions to the Ohio state implementation plan. The documented emission inventories are approved as a revision of the state's implementation plan, meeting emission inventory requirements for the 2008 ozone national ambient air quality standard.

[FR Doc. 2016–05273 Filed 3–9–16; 8:45 am]

BILLING CODE 6560–50–P

ENVIRONMENTAL PROTECTION AGENCY

40 CFR Part 52

[EPA–R06–OAR–2014–0642; FRL–9943–43–Region 6]

Approval and Promulgation of Air Quality Implementation Plans; New Mexico; and Albuquerque/Bernalillo County; Revisions To Establish Small Business Stationary Source Technical and Environmental Compliance Assistance Programs

AGENCY: Environmental Protection Agency (EPA).

ACTION: Direct final rule.

SUMMARY: The Environmental Protection Agency (EPA) is approving revisions to the New Mexico State Implementation Plan (SIP) for both the State and Albuquerque/Bernalillo County. These revisions establish Small Business Stationary Source Technical and Environmental Compliance Assistance Programs. The EPA is approving these revisions pursuant to section 110 and section 507(a) of the Clean Air Act (CAA).

DATES: This rule is effective on May 9, 2016 without further notice unless EPA receives relevant adverse comments by April 11, 2016. If EPA receives such comments, EPA will publish a timely withdrawal in the **Federal Register** informing the public that the rule will not take effect.

ADDRESSES: Submit your comments, identified by Docket No. EPA–R06–OAR–2014–0642, at *http://www.regulations.gov* or via email to *walser.john@epa.gov.* Follow the online instructions for submitting comments. Once submitted, comments cannot be edited or removed from Regulations.gov. The EPA may publish any comment received to its public docket. Do not submit electronically any information you consider to be Confidential Business Information (CBI) or other information whose disclosure is restricted by statute. Multimedia submissions (audio, video, etc.) must be accompanied by a written comment. The written comment is considered the official comment and should include discussion of all points you wish to make. The EPA will generally not consider comments or comment contents located outside of the primary submission (*i.e.* on the web, cloud, or other file sharing system). For additional submission methods, please contact John Walser, 214–665–7128, *walser.john@epa.gov.* For the full EPA public comment policy, information about CBI or multimedia submissions, and general guidance on making effective comments, please visit *http://www2.epa.gov/dockets/commenting-epa-dockets.*

Docket: All documents in the docket are listed in the *www.regulations.gov* index and in hard copy at EPA Region 6, 1445 Ross Avenue, Suite 700, Dallas, Texas. While all documents in the docket are listed in the index, some information may be publicly available only at the hard copy location (*e.g.,* copyrighted material), and some may not be publicly available at either location (*e.g.,* CBI).

FOR FURTHER INFORMATION CONTACT: Mr. John Walser (6PD–L), (214) 665–7128, *walser.john@epa.gov.*

SUPPLEMENTARY INFORMATION: Throughout this document, ''we,'' ''us,'' and ''our'' means EPA.

Table of Contents

I. Background
A. What is a SIP?
B. Small Business Assistance Program (SBAP)
II. Overview of the November 5 and November 16, 1992 State Submittals
A. New Mexico
B. Albuquerque
C. General
III. Plan Requirements and Our Evaluation
A. Small Business Assistance Program
B. Ombudsman
C. Compliance Assistance Panel (CAP)
D. Eligibility
E. Section 110(l)
IV. Final Action
V. Statutory and Executive Order Reviews

I. Background

A. What is a SIP?

Section 110 of the CAA requires states to develop air pollution regulations and control strategies to ensure that air quality meets the National Ambient Air Quality Standards (NAAQS) established by EPA. The NAAQS are established under section 109 of the CAA and currently address six criteria pollutants: Carbon monoxide, nitrogen dioxide, ozone, lead, particulate matter, and sulfur dioxide. A SIP is a set of air pollution regulations, control strategies, other means or techniques, and technical analyses developed by the state, to ensure that air quality in the state meets the NAAQS. It is required by section 110 and other provisions of the CAA. A SIP protects air quality primarily by addressing air pollution at its point of origin. SIPs can be extensive, containing state regulations or other enforceable documents, and supporting information such as city and county ordinances, monitoring networks, and modeling demonstrations. Each state must submit any SIP revision to EPA for approval and incorporation into the federally-enforceable SIP.

The New Mexico SIP includes a variety of control strategies, including the regulations that outline general provisions applicable to and implemented by the Albuquerque/Bernalillo County Air Quality Control Board (AQCB).

B. Small Business Assistance Program

Implementation of the provisions of the CAA, as amended in 1990, requires regulation of many small businesses so that areas may attain and maintain the national ambient air quality standards (NAAQS) and reduce the emissions of air toxics. Small businesses frequently lack the technical expertise and financial resources necessary to evaluate state regulations and to determine the appropriate mechanisms for compliance. Congress anticipated the impact of these requirements on small businesses and, accordingly, required in CAA section 507 that each state submit a SIP revision with plans for establishing a Small Business Stationary Source Technical and Environmental Compliance Assistance Program (Program). A key Program requirement outlined in CAA section 507(a), is the establishment of a Small Business Assistance Program (SBAP) to provide technical and compliance assistance to small businesses. In January 1992, the EPA issued ''Guidelines for the Implementation of Section 507 of the 1990 Clean Air Act Amendments,'' in order to delineate the Federal and State roles in meeting the new statutory provisions, and as a tool to provide further guidance to states on submitting acceptable SIP revisions. That guidance described the SBAP as the ''core'' of a state's Program, because the SBAP is, ''where the actual assistance to small businesses occurs.'' [1]

II. Overview of the November 5 and November 16, 1992 State Submittals

A. New Mexico

On November 5, 1992, the Governor of New Mexico submitted revisions to the New Mexico SIP to establish the Program. The submittal was adopted by the Environmental Improvement Board (EIB) on October 9, 1992, consistent with the public notice requirements of CAA section 110(*l*). The revisions established a Program for the State of New Mexico, excluding Albuquerque/Bernalillo County.

The November 5, 1992 revisions to the SIP were in the form of a narrative commitment for full implementation of the Program by November 15, 1994 and a commitment to coincide with the effective date of the State's operating permit program. The Ombudsman (Director of Strategic Initiatives and Special Projects) is located in the Office of the NMED Secretary and was appointed before November 15, 1994, to represent the interests of small businesses, as they relate to the implementation of Section 507(a)(3) of the CAA.

In addition to designating a State Ombudsman to satisfy CAA section 507(a)(3), the State submitted its plans for the creation of a state SBAP. The State explained that the technical component of the SBAP would consist of state technical experts who would respond to requests for assistance from small businesses. The state explained that these technical staff would be located in the Air Quality Bureau's Planning Section, and would respond to permitting and compliance questions. As part of the SBAP, New Mexico's submission detailed the adequate mechanisms and procedures that would satisfy the remaining requirements of CAA section 507(a)(1)–(2), (4)–(7).

B. Albuquerque

On November 16, 1992, The Governor of New Mexico submitted revisions to the New Mexico SIP for Albuquerque/Bernalillo County. The submittal was adopted by the Air Quality Control Board on October 7, 1992, consistent with the public notice requirements of CAA section 110(*l*). The revisions establish the Small Business Stationary Source Technical and Environmental Compliance Program for Albuquerque/Bernalillo County.

The November 16, 1992 revisions to the SIP were in the form of a narrative commitment for full implementation of the SBAP by November 15, 1994 and a commitment to coincide with the effective date of the State's operating permit program. The Small Business Ombudsman is in the office of the Albuquerque Environmental Health Director (AEHD). The establishment of a SBAP for providing technical and compliance assistance to small businesses was committed to be in the AEHD Air Pollution Control Division's Planning Section to give small businesses correct technical, permitting and compliance information for all applicable CAA requirements.

C. General

In an August 28, 2015 letter, the State of New Mexico withdrew the elements of the 1992 SIP pertaining to the Compliance Assistance Panel (CAP), a requirement of CAA section 507(e) that EPA has historically viewed as a required component of the Program. Since the New Mexico legislature created one CAP for both the State and Albuquerque/Bernalillo County, the withdrawal, therefore, applies to both the State and Albuquerque/Bernalillo County.[2]

Through an administrative oversight, these SIP revisions were not acted upon when submitted. EPA is now moving forward to take action on these revisions as part of our national SIP backlog reduction efforts.

[1] U.S. EPA, ''Guidelines for the Implementation of Section 507 of the 1990 Clean Air Act Amendments'' (January 1992) at vii.

[2] August 28, 2015 Letter from Ryan Flynn, Secretary, State of New Mexico Environment Department, to Ron Curry, Regional Administrator for EPA Region 6, to withdraw the CAP from the 1992 SIP submittal.

III. Plan Requirements and Our Evaluation

Section 507 of the CAA describes three broad sets of requirements: (1) The establishment of a Small Business Assistance Program (SBAP) to provide technical and compliance assistance to small businesses; (2) the establishment of a State Small Business Ombudsman to represent the interests of small business in the regulatory process; and (3) the creation of a Compliance Advisory Panel (CAP) ''on the State level'' to determine and report on the overall effectiveness of the SBAP.

A. Small Business Assistance Program

The overarching purpose of establishing an SBAP is to provide technical and compliance assistance to small businesses. As interpreted by EPA, CAA section 507(a) sets forth six requirements which must be met by the State in order to have an approvable SBAP.[3] The first SBAP requirement is for the State to establish adequate mechanisms for developing, collecting and coordinating information concerning compliance methods and technologies for small business stationary sources, and programs to encourage lawful cooperation among such sources and other persons to further compliance with the CAA.[4]

The second SBAP requirement is that the State establish adequate mechanisms for assisting small business stationary sources with pollution prevention and accidental release detection and prevention, including providing information concerning alternative technologies, process changes, products and methods of operation that help reduce air pollution.[5]

The third SBAP requirement is to develop a compliance and technical assistance program for small business stationary sources which assists small businesses in determining applicable requirements and in receiving permits under the Act in a timely and efficient manner.[6]

The fourth SBAP requirement is to develop adequate mechanisms to assure that small business stationary sources receive notice of their rights under the CAA in such manner and form as to assure reasonably adequate time for such sources to evaluate compliance methods or final regulation or standards issued under the Act.[7]

The fifth SBAP requirement is to develop adequate mechanisms for informing small business stationary sources of their obligation under the CAA, including mechanisms for referring such sources to qualified auditors or, at the option of the State, for providing audits of operations of such sources to determine compliance with the CAA.[8]

The sixth SBAP requirement is to develop procedures for consideration of requests from a small business stationary source for modification of: (A) Any work practice or technological method of compliance; or (B) the schedule of milestones for implementing such work practice or method of compliance preceding any applicable compliance date based on the technological and financial capability of any such small business stationary source.[9]

The SIP narratives for both the State and Albuquerque/Bernalillo County discuss how their respective SBAPs meet the above requirements, and include further information about how each entity expects to implement and maintain their Programs. Further explanation of our analysis of the adequacy of the submissions with respect to the SBAP requirements can be found in the TSD for this action.

B. Ombudsman

Section 507(a) also requires states to establish a State Small Business Ombudsman to represent the interests of small businesses in the regulatory process. CAA section 507(a)(3) requires the designation of a State office to serve as the Ombudsman for small business stationary sources. The State has met this requirement by appointing an Ombudsman in the Office of the NMED Secretary in 1992. Albuquerque/Bernalillo County met this requirement by committing to appoint an Ombudsman in the Office of the Albuquerque Environmental Health Department before the November 15, 1994 statutory deadline.

C. Compliance Advisory Panel (CAP)

In addition to the SBAP and Ombudsman, CAA section 507 envisions the creation of a Compliance Advisory Panel (CAP) ''on the State level'' to, among other things, evaluate and report on the overall effectiveness of the SBAP.[10] Congress narrowly prescribed the membership of the CAP, including which state officials would be responsible for appointing members representing various interests.[11] At the time of the submittal in 1992, the New Mexico program included a statewide CAP that met these stringent requirements, and which New Mexico believed was a required Program element because of EPA's 1992 Program Guidance. Since that time, however, and after having a CAP in place for over 10 years, the State did not continue to operate a CAP. As mentioned previously, the State withdrew the portions of its SIP submission regarding the CAP in a letter dated August 28, 2015, a copy of which may be found in the docket for this action.

Although EPA has historically viewed the CAP as a necessary component of a Program, the Agency no longer believes that to be the case. In CAA section 507(a), Congress directed that EPA ''shall approve'' a Program if it meets the criteria outlined in section 507(a)(1)–(7). The requirement for the creation of a CAP, located in section 507(e), is not one of those criteria. This distinguishes the CAP from the requirements to designate a state office to serve as Ombudsman or to establish an SBAP, which are criteria for Program approval in CAA section 507(a). Although a State may submit a CAP for inclusion as a component of its Program—and indeed, EPA still believes that CAPs serve an important role in the continued operational success of a Program—Congress, in locating the CAP requirement in section 507(e), envisioned that the requirement to create a CAP would be severable from the Program requirements outlined in section 507(a). Accordingly, New Mexico's withdrawal of the CAP portion of its SIP submission does not prevent EPA from acting on the remainder of the submission. EPA believes that New Mexico, including Albuquerque/Bernalillo County, continues to operate a robust SBAP providing the required services to eligible small businesses.

Before taking an action that, as here, differs from past guidance or practice, EPA's internal practices direct Regional Offices to follow a SIP consistency process to ensure consistency in across regional actions. The SIP consistency process was established in 1995 as part of the delegation to Regional Administrators of SIPs and SIP revision approval/disapprovals actions.[12]

[3] Notably, section 507(a) sets forth seven requirements, in subsections (1)–(7). The third of these, section 507(a)(3), requires the establishment of an Ombudsman Office—a key Program element. The Ombudsman requirement of section 507(a)(3) is discussed in the next section.

[4] *See* CAA section 507(a)(1).

[5] *See id.* section 507(a)(2).

[6] *See id.* section 507(a)(4).

[7] *See id.* section 507(a)(5).

[8] *See id.* section 507(a)(6).

[9] *See id.* section 507(a)(7).

[10] *See id.* section 507(e)(1).

[11] *See id.* section 507(e)(2).

[12] *See* Memorandum from William L. Wehrum, Acting Assistant Administrator, to Air Division Directors, Regions I–X (September 7, 2005)

Continued

Pursuant to 40 CFR 56.6(b) and the SIP consistency guidelines, EPA Region 6 followed this process. Pursuant to the SIP consistency process, EPA Region 6 consulted with all other EPA regional offices, the Office of Air and Radiation, and the Office of General Counsel. Region 6 received no objections to this shift in approach.

EPA is approving the New Mexico and Albuquerque Small Business Assistance Programs as revised with the withdrawal of the element relating to the CAP. Approval in the SIP will support state and local efforts to maintain their respective Programs.

D. Eligibility

While not a required Program element, it is also important that the SIP establishes criteria and procedures for determining the eligibility of a source to receive assistance under the Program. Section 507(c)(1) of the CAA defines the term ''small business stationary source'' as a stationary source that:

(a) Is owned or operated by a person who employs 100 or fewer individuals;

(b) Is a small business concern as defined in the Small Business Act;

(c) Is not a major stationary source;

(d) Does not emit 50 tons per year (tpy) or more of any regulated pollutant; and

(e) Emits less than 75 tpy of all regulated pollutants.

The State of New Mexico has established a mechanism for ascertaining the eligibility of a source to receive assistance under the Program, including an evaluation of a source's eligibility using the criteria in section 507(c)(1) of the CAA. This mechanism is described in the state's narrative SIP revision.

The State has also provided for exclusion from the small business stationary source definition, after consultation with the EPA and the Small Business Administration Administrator and after providing notice and opportunity for public hearing, of any category or subcategory of sources that the State determines to have sufficient technical and financial capabilities to meet the requirements of the CAA.

E. Section 110(l)

Section 110(*l*) of the Act provides that a SIP revision must be adopted by a State after reasonable notice and public hearing. The submitted revisions address the City of Albuquerque/Bernalillo County and the State of New Mexico's Small Business Assistance Programs, as discussed in Section II of this preamble. Additionally, CAA section 110(*l*) states that the EPA cannot approve a SIP revision if that revision would interfere with any applicable requirement regarding attainment, reasonable further progress (RFP) or any requirement established in the CAA. The revisions do not interfere with any applicable requirement. To the contrary, they enhance the current SIP by providing for technical and compliance assistance for small businesses.

IV. Final Action

Pursuant to sections 110 and 507 of the Act, EPA is approving through a direct final action, revisions to the New Mexico SIP that were submitted on November 5, 1992 and November 16, 1992. We evaluated the state's submittals and determined that they meet the applicable requirements of the CAA section 507(a). Also, in accordance with CAA section 110(*l*), the proposed revisions will not interfere with attainment of the NAAQS, reasonable further progress, or any other applicable requirement of the CAA. Finally, this approval is in accordance with 40 CFR 56.6(b) and our SIP consistency guidelines. These revisions do not apply to Indian lands over which the State or the AQCB lacks jurisdiction.

EPA is publishing this rule without prior proposal because we view these as non-controversial amendments and anticipate no adverse comments. However, in the proposed rules section of this **Federal Register** publication, we are publishing a separate document that will serve as the proposal to approve the SIP revision if relevant adverse comments are received. This rule will be effective on May 9, 2016 without further notice unless we receive relevant adverse comments by April 11, 2016. If we receive relevant adverse comments, we will publish a timely withdrawal of this direct final rulemaking in the **Federal Register** informing the public that the direct final rule will not take effect. We will address all public comments in a subsequent final rule based on the proposed rule. We will not institute a second comment period on this action. Any parties interested in commenting must do so now. Please note that if we receive adverse comment on an amendment, paragraph, or section of this rule and if that provision may be severed from the remainder of the rule, we may adopt as final those provisions of the rule that are not the subject of an adverse comment.

V. Statutory and Executive Order Reviews

Under the CAA, the Administrator is required to approve a SIP submission that complies with the provisions of the Act and applicable federal regulations. 42 U.S.C. 7410(k); 40 CFR 52.02(a). Thus, in reviewing SIP submissions, EPA's role is to approve state choices, provided that they meet the criteria of the CAA. Accordingly, this action merely approves state law as meeting Federal requirements and does not impose additional requirements beyond those imposed by state law. For that reason, this action:

- Is not a ''significant regulatory action'' subject to review by the Office of Management and Budget under Executive Orders 12866 (58 FR 51735, October 4, 1993) and 13563 (76 FR 3821, January 21, 2011);
- Does not impose an information collection burden under the provisions of the Paperwork Reduction Act (44 U.S.C. 3501 *et seq.*);
- Is certified as not having a significant economic impact on a substantial number of small entities under the Regulatory Flexibility Act (5 U.S.C. 601 *et seq.*);
- Does not contain any unfunded mandate or significantly or uniquely affect small governments, as described in the Unfunded Mandates Reform Act of 1995 (Pub. L. 104–4);
- Does not have federalism implications as specified in Executive Order 13132 (64 FR 43255, August 10, 1999);
- Is not an economically significant regulatory action based on health or safety risks subject to Executive Order 13045 (62 FR 19885, April 23, 1997);
- Is not a significant regulatory action subject to Executive Order 13211 (66 FR 28355, May 22, 2001);
- Is not subject to requirements of section 12(d) of the National Technology Transfer and Advancement Act of 1995 (15 U.S.C. 272 note) because application of those requirements would be inconsistent with the CAA; and
- Does not provide EPA with the discretionary authority to address, as appropriate, disproportionate human health or environmental effects, using practicable and legally permissible methods, under Executive Order 12898 (59 FR 7629, February 16, 1994).

In addition, the SIP is not approved to apply on any Indian reservation land or in any other area where EPA or an Indian tribe has demonstrated that a tribe has jurisdiction. In those areas of Indian country, the rule does not have tribal implications as specified by Executive Order 13175 (65 FR 67249,

(outlining the process). A copy of that memorandum is included in the docket.

November 9, 2000), nor will it impose substantial direct costs on tribal governments or preempt tribal law.

The Congressional Review Act, 5 U.S.C. 801 *et seq.,* as added by the Small Business Regulatory Enforcement Fairness Act of 1996, generally provides that before a rule may take effect, the agency promulgating the rule must submit a rule report, which includes a copy of the rule, to each House of the Congress and to the Comptroller General of the United States. EPA will submit a report containing this rule and other required information to the U.S. Senate, the U.S. House of Representatives, and the Comptroller General of the United States prior to publication of the rule in the **Federal Register**. A major rule cannot take effect until 60 days after it is published in the **Federal Register**. This action is not a ''major rule'' as defined by 5 U.S.C. 804(2).

Under section 307(b)(1) of the CAA, petitions for judicial review of this action must be filed in the United States Court of Appeals for the appropriate circuit by May 9, 2016. Filing a petition for reconsideration by the Administrator of this final rule does not affect the finality of this rule for the purposes of judicial review nor does it extend the time within which a petition for judicial review may be filed, and shall not postpone the effectiveness of such rule or action. This action may not be challenged later in proceedings to enforce its requirements. (See section 307(b)(2)).

List of Subjects in 40 CFR Part 52

Environmental protection, Air pollution control, Incorporation by reference, Intergovernmental relations, Nitrogen dioxides, Ozone, Particulate matter, Reporting and recordkeeping requirements, Volatile organic compounds.

Dated: February 24, 2016.

Ron Curry,

Regional Administrator, Region 6.

40 CFR part 52 is amended as follows:

PART 52—APPROVAL AND PROMULGATION OF IMPLEMENTATION PLANS

■ 1. The authority citation for part 52 continues to read as follows:

Authority: 42 U.S.C. 7401 *et seq.*

Subpart GG—New Mexico

■ 2. In § 52.1620(e), the second table in paragraph (e), entitled ''EPA-Approved Nonregulatory Provisions and Quasi-Regulatory Measures in the New Mexico SIP'' is amended by adding two new entries at the end of the table to read as follows:

§ 52.1620 Identification of plan.

* * * * *

(e) * * *

EPA-APPROVED NONREGULATORY PROVISIONS AND QUASI-REGULATORY MEASURES IN THE NEW MEXICO SIP

Name of SIP Revision	Applicable geographic or nonattainment area	State submittal/ effective date	EPA approval date	Explanation
* * *	*	*	*	*
Small Business Stationary Source Technical and Environmental Compliance Assistance Program.	Statewide, excluding Bernalillo County.	11/05/1992	3/10/2016, [Insert **Federal Register** Citation].	
Small Business Stationary Source Technical and Environmental Compliance Assistance Program.	Albuquerque/Bernalillo County.	11/16/1992	3/10/2016, [Insert **Federal Register** Citation].	

[FR Doc. 2016–05162 Filed 3–9–16; 8:45 am]

BILLING CODE 6560–50–P

DEPARTMENT OF HEALTH AND HUMAN SERVICES

Centers for Medicare & Medicaid Services

42 CFR Part 435

Eligibility in the States, District of Columbia, the Northern Mariana Islands, and American Samoa

CFR Correction

In Title 42 of the Code of Federal Regulations, Parts 430 to 481, revised as of October 1, 2015, on page 161, in § 435.301, in paragraph (b)(2)(iii), remove the term ''435.330.320'' and add the term ''435.320'' in its place.

[FR Doc. 2016–05484 Filed 3–9–16; 8:45 am]

BILLING CODE 1505–01–D

CORPORATION FOR NATIONAL AND COMMUNITY SERVICE

45 CFR Parts 1201, 2505, 2507, and 2508

RIN 3045–AA64

Change of Address for the Corporation for National and Community Service (CNCS)

AGENCY: Corporation for National and Community Service.

ACTION: Final rule.

SUMMARY: The Corporation for National and Community Service (CNCS) is updating its regulations to reflect a change of address. CNCS headquarters moved to 250 E Street SW., Washington, DC 20525, effective January 25, 2016.

DATES: This rule is effective March 10, 2016.

FOR FURTHER INFORMATION CONTACT: Phyllis Green, Executive Assistant, Office of General Counsel, at 202–606–6709 or email to *pgreen@cns.gov.* Individuals who use a telecommunications device for the deaf (TTY–TDD) may call 1–800–833–3722 between 8:00 a.m. and 8:00 p.m. Eastern Time, Monday through Friday.

SUPPLEMENTARY INFORMATION:

I. Background

The Corporation for National and Community Service (CNCS) is a federal agency that engages more than five million Americans in service through its AmeriCorps, Senior Corps, Social Innovation Fund, and Volunteer Generation Fund programs, and leads the President's national call to service initiative, United We Serve. For more information, visit *www.nationalservice.gov.*

On January 25, 2016, CNCS headquarters relocated to 250 E Street, SW., Washington, DC 20525. This rule updates CNCS's physical and internet address where it is referenced in CNCS regulations.

II. Procedural Requirements

A. Determination To Issue Final Rule Effective in Less Than 30 Days

CNCS has determined that the public notice and comment provisions of the Administrative Procedure Act, 5 U.S.C. 553(b), do not apply to this rulemaking. Because updating the agency's address is a matter of ''agency organization, procedure, and practice,'' it is exempt from notice and comment rulemaking under 5 U.S.C. 553(b)(3)(A). CNCS has also determined that there is good cause to waive the requirement of publication 30 days in advance of the rule's effective date under 5 U.S.C. 553(d)(3). The public benefits from having the regulations reflect the correct physical and internet address of CNCS so that public has the correct information on how to contact the agency. The use of the incorrect address could result in correspondence not reaching the agency.

B. Review Under Procedural Statutes and Executive Orders

CNCS has determined that making changes to is regulations to reflect the correct address of CNCS headquarters and the agency Web site does not trigger any requirements under the procedural statutes and Executive Orders that govern rulemaking procedures.

III. Effective Date

This rule is effective March 10, 2016.

List of Subjects

45 CFR Part 1201

Administrative practice and procedure, Courts, Freedom of information.

45 CFR Part 2505

Sunshine Act.

45 CFR Part 2507

Freedom of information.

45 CFR Part 2508

Privacy.

For the reasons discussed in the preamble, under the authority of 42 U.S.C. 12651c(c), the Corporation for National and Community Service amends chapters XII and XXV, title 45 of the Code of Federal Regulations as follows:

PART 1201—PRODUCTION OR DISCLOSURE OF OFFICIAL INFORMATION IN RESPONSE TO COURT ORDERS, SUBPOENAS, NOTICES OF DEPOSITIONS, REQUESTS FOR ADMISSIONS, INTERROGATORIES, OR IN CONNECTION WITH FEDERAL OR STATE LITIGATION

■ 1. The authority citation for part 1201 continues to read as follows:

Authority: 42 U.S.C. 12501 *et seq.*

■ 2. In § 1201.3, revise the second sentence of paragraph (a) to read as follows:

§ 1201.3 Service of summonses and complaints.

(a) * * * All such documents should be delivered or addressed to General Counsel, Corporation for National and Community Service, 250 E Street SW., Washington, DC 20525.

* * * * *

PART 2505—RULES IMPLEMENTING THE GOVERNMENT IN THE SUNSHINE ACT

■ 3. The authority citation for part 2505 continues to read as follows:

Authority: 5 U.S.C. 552b; 42 U.S.C. 12651c(c).

■ 4. In § 2505.5, revise the second sentence of paragraph (b) to read as follows:

§ 2505.5 What are the procedures for closing a meeting, withholding information, and responding to requests by affected persons to close a meeting?

* * * * *

(b) * * * You should submit your request to the Corporation for National and Community Service, Office of the General Counsel, 250 E Street SW., Washington, DC 20525. * * *

* * * * *

PART 2507—PROCEDURES FOR DISCLOSURE OF RECORDS UNDER THE FREEDOM OF INFORMATION ACT

■ 5. The authority citation for part 2507 continues to read as follows:

Authority: 42 U.S.C. 12501 *et seq.*

■ 6. In § 2507.3, revise paragraph (f) to read as follows:

§ 2507.3 What types of records are available for disclosure to the public?

* * * * *

(f) These records will be made available for public inspection and copying in the Corporation's reading room located at the Corporation for National and Community Service, 250 E Street SW., Washington, DC 20525, during the hours of 9:30 a.m. to 4:00 p.m., Monday through Friday, except on official holidays.

* * * * *

■ 7. In § 2507.4, revise the first sentence in paragraph (a)(1) and paragraph (a)(2) to read as follows:

§ 2507.4 How are requests for records made?

(a) *How made and addressed.* (1) Requests for Corporation records under the Act must be made in writing, and can be mailed, hand-delivered, or received by facsimile, to the FOIA Officer, Corporation for National and Community Service, 250 E Street SW., Washington, DC 20525. * * *

(2) Corporation records that are available in the Corporation's reading room will also be made available for public access through the Corporation's ''electronic reading room'' internet site. The following address is the Corporation's Internet Web site: *http://www.nationalservice.gov.*

* * * * *

PART 2508—IMPLEMENTATION OF THE PRIVACY ACT OF 1974

■ 8. The authority citation for part 2508 continues to read as follows:

Authority: 5 U.S.C. 552a; 42 U.S.C. 12501 *et seq.;* 42 U.S.C. 4950 *et seq.*

■ 9. In § 2508.6, revise paragraph (f) to read as follows:

§ 2508.6 When will the Corporation publish a notice for new routine uses of information in its system of records?

* * * * *

(f) The categories of recipients of such use. In the event of any request for an addition to the routine uses of the systems which the Corporation maintains, such request may be sent to the following office: Office of the General Counsel, Corporation for National and Community Service, 250 E Street SW., Washington, DC 20525.

■ 10. In § 2508.13, revise paragraph (a) to read as follows:

§ 2508.13 What are the procedures for acquiring access to Corporation records by an individual about whom a record is maintained?

(a) Any request for access to records from any individual about whom a record is maintained will be addressed to the Corporation for National and Community Service, Office of the General Counsel, Attn: Privacy Act Officer, 250 E Street SW., Washington, DC 20525, or delivered in person during regular business hours, whereupon access to his or her record, or to any

information contained therein, if determined to be releasable, shall be provided.

* * * * *

■ 11. In § 2508.15, revise the first sentence of paragraph (b)(1) to read as follows:

§ 2508.15 What are the procedures for requesting inspection of, amendment or correction to, or appeal of an individual's records maintained by the Corporation other than that individual's official personnel file?

* * * * *

(b) * * *

(1) In the event an individual, after examination of his or her record, desires to request an amendment or correction of such records, the request must be submitted in writing and addressed to the Corporation for National and Community Service, Office of the General Counsel, Attn: Privacy Act Officer, 250 E Street SW., Washington, DC 20525. * * *

* * * * *

■ 12. In § 2508.16, revise the first sentence of paragraph (a) to read as follows:

§ 2508.16 What are the procedures for filing an appeal for refusal to amend or correct records?

(a) In the event an individual desires to appeal any refusal to correct or amend records, he or she may do so by addressing, in writing, such appeal to the Corporation for National and Community Service, Office of the Chief Operating Officer, Attn: Appeal Officer, 250 E Street SW., Washington, DC 20525. * * *

* * * * *

Dated: March 4, 2016.

Jeremy Joseph,

General Counsel.

[FR Doc. 2016–05347 Filed 3–9–16; 8:45 am]

BILLING CODE 6050–28–P

DEPARTMENT OF COMMERCE

National Oceanic and Atmospheric Administration

50 CFR Part 622

[Docket No. 101206604–1758–02]

RIN 0648–XE445

Fisheries of the Caribbean, Gulf of Mexico, and South Atlantic; 2016 Recreational Accountability Measure and Closure for Atlantic Migratory Group Cobia

AGENCY: National Marine Fisheries Service (NMFS), National Oceanic and Atmospheric Administration (NOAA), Commerce.

ACTION: Temporary rule; closure.

SUMMARY: NMFS implements accountability measures (AMs) for Atlantic migratory group cobia that are not sold (recreational) in the exclusive economic zone (EEZ) of the South Atlantic. NMFS projects that recreational landings of Atlantic migratory group cobia will reach the recreational annual catch target (ACT) by June 20, 2016. Therefore, NMFS closes the recreational sector for Atlantic migratory group cobia on June 20, 2016, and it will remain closed for the remainder of the fishing year through December 31, 2016. This closure is necessary to protect the resource of Atlantic migratory group cobia.

DATES: This rule is effective from 12:01 a.m., local time, June 20, 2016, until 12:01 a.m., local time, January 1, 2017.

FOR FURTHER INFORMATION CONTACT: Karla Gore, NMFS Southeast Regional Office, telephone: 727–824–5305, email: *karla.gore@noaa.gov.*

SUPPLEMENTARY INFORMATION: The fishery for coastal migratory pelagic fish (king mackerel, Spanish mackerel, and cobia) is managed under the Fishery Management Plan for Coastal Migratory Pelagic Resources in the Gulf of Mexico and Atlantic Region (FMP). The FMP was prepared by the Gulf of Mexico and South Atlantic Fishery Management Councils and is implemented by NMFS under the authority of the Magnuson-Stevens Fishery Conservation and Management Act (Magnuson-Stevens Act) by regulations at 50 CFR part 622.

Separate migratory groups of cobia were established in Amendment 18 to the FMP (76 FR 82058, December 29, 2011) and revised in Amendment 20B to the FMP (80 FR 4216, January 27, 2015). The southern boundary for Atlantic migratory group cobia occurs at a line that extends due east of the Florida/Georgia border at 30°42′45.6″ N. latitude. The northern boundary for Atlantic migratory group cobia is at the jurisdictional boundary between the Mid-Atlantic and New England Fishery Management Councils. As specified in 50 CFR 600.105(a), the northern boundary begins at the intersection point of Connecticut, Rhode Island, and New York at 41°18′16.249″ N. latitude and 71°54′28.477″ W. longitude and proceeds south along 37°22′32.75″ E. longitude to the point of intersection with the outward boundary of the EEZ as specified in the Magnuson-Stevens Act.

Atlantic migratory group cobia are unique among federally managed species in the southeast region, because no Federal commercial permit is required to harvest and sell them. The distinction between commercial and recreational sectors is not as clear as other federally managed species in the southeast region. For example, regulations at 50 CFR part 622 specify ACLs and AMs for cobia that are sold and cobia that are not sold. However, for purposes of this temporary rule, Atlantic migratory group cobia that are sold are considered commercially-caught, and those that are not sold are considered recreationally-caught.

The AMs specified at 50 CFR 622.388(f)(2)(i) require that for the recreational sector of Atlantic migratory group cobia, if the sum of the commercial and recreational landings exceed the stock ACL (commercial ACL plus recreational ACL), NMFS must file a notice with the Office of the Federal Register at or near the beginning of the following fishing year to reduce the length of the fishing season by the amount necessary to ensure landings may achieve the applicable recreational ACT, but do not exceed the applicable recreational ACL.

The recreational AM is triggered for 2016, because although commercial landings did not exceed the commercial ACL (commercial quota) in 2015, the recreational landings exceeded both the recreational ACL and the stock ACL. Because Amendment 20B to the FMP changed the ACLs beginning in 2015, only 1 year of recreational landings is available to compare to the recreational ACL. NMFS has determined that the recreational ACT for Atlantic migratory group cobia will be reached by June 20, 2016. Accordingly, the recreational harvest of Atlantic migratory group cobia will be closed at 12:01 a.m., local time, on June 20, 2016, and remain closed until 12:01 a.m., local time, January 1, 2017.

During the recreational closure, the possession limit of two cobia per day remains in effect (50 CFR 622.383(b)) for Atlantic migratory group cobia that are sold. The possession limit applies to cobia harvested in or from the EEZ in the Mid-Atlantic or South Atlantic, regardless of the number of trips or duration of a trip. In addition, a person who fishes in the EEZ may not combine this harvest limitation with a harvest limitation applicable to state waters. Atlantic migratory group cobia taken in the EEZ may not be transferred at sea, regardless of where such transfer takes place, and may not be transferred in the EEZ.

Because the commercial AM has not been triggered in 2016, this is only for the recreational sector. The commercial quota for Atlantic migratory group cobia is 50,000 lb (22,680 kg), round weight, for the current fishing year, January 1 through December 31, 2016, as specified in 50 CFR 622.384(d)(2). The sale or purchase of Atlantic migratory group cobia taken under the possession limit is allowed until the commercial quota is reached or is projected to be reached. If cobia landings that are sold reach or are projected to reach the commercial quota specified in § 622.384(d)(2), the Assistant Administrator for Fisheries, NOAA (AA), will file a notification with the Office of the Federal Register to prohibit the sale and purchase of cobia for the remainder of the fishing year through December 31, 2016.

Classification

The Regional Administrator, Southeast Region, NMFS, has determined this temporary rule is necessary for the conservation and management of Atlantic migratory group cobia and is consistent with the Magnuson-Stevens Act and other applicable laws.

This action is taken under 50 CFR 622.388(f)(2) and is exempt from review under Executive Order 12866.

These measures are exempt from the procedures of the Regulatory Flexibility Act because the temporary rule is issued without opportunity for prior notice and comment.

This action is based on the best scientific information available. The AA finds good cause to waive the requirements to provide prior notice and opportunity for public comment, pursuant to the authority set forth at 5 U.S.C. 553(b)(B), as such prior notice and opportunity for public comment is unnecessary and contrary to the public interest. Such procedures are unnecessary and contrary to the public interest because the AMs for Atlantic migratory group cobia established by Amendment 18 to the FMP, and located at 50 CFR 622.388(f)(1)(i), have already been subject to notice and comment, and all that remains is to notify the public of the recreational closure in the 2016 fishing year. Prior notice and opportunity for public comment on this action would be contrary to the public interest, because many of those affected by the length of the recreational fishing season, particularly charter vessel and headboat operations that book trips for clients in advance, need as much advance notice as NMFS is able to provide to adjust their business plans to account for the reduced recreational fishing season.

For the aforementioned reasons, the AA also finds good cause to waive the 30-day delay in the effectiveness of this action under 5 U.S.C. 553(d)(3).

Authority: 16 U.S.C. 1801 *et seq.*

Dated: March 7, 2016.

Emily H. Menashes,

Acting Director, Office of Sustainable Fisheries, National Marine Fisheries Service.

[FR Doc. 2016–05393 Filed 3–9–16; 8:45 am]

BILLING CODE 3510–22–P

DEPARTMENT OF COMMERCE

National Oceanic and Atmospheric Administration

50 CFR Part 635

[Docket No. 150413357–5999–02]

RIN 0648–XE484

Atlantic Highly Migratory Species; Commercial Blacktip Sharks, Aggregated Large Coastal Sharks, and Hammerhead Sharks in the Western Gulf of Mexico Sub-Region

AGENCY: National Marine Fisheries Service (NMFS), National Oceanic and Atmospheric Administration (NOAA), Commerce.

ACTION: Temporary rule; closure.

SUMMARY: NMFS is closing the commercial fishery for blacktip sharks and the aggregated large coastal sharks (LCS) and hammerhead shark management groups in the western Gulf of Mexico sub-region. This action is necessary because the commercial landings of aggregated LCS and hammerhead sharks in the western Gulf of Mexico sub-region for the 2016 fishing season have exceeded 80 percent of the available commercial quota as of March 4, 2016, and the aggregated LCS and hammerhead shark management groups are quota-linked under the current regulations. The blacktip shark fishery in the western Gulf of Mexico sub-region will be closed to minimize regulatory discards of aggregate LCS in the western Gulf of Mexico sub-region, which are often caught in conjunction with blacktip sharks in the commercial shark fisheries. This closure will affect anyone commercially fishing for sharks in the western Gulf of Mexico sub-region.

DATES: The commercial fishery for blacktip sharks and the aggregated LCS and hammerhead shark management groups in the western Gulf of Mexico sub-region are closed effective 11:30 p.m. local time March 12, 2016, until the end of the 2016 fishing season on December 31, 2016, or until and if NMFS announces via a notice in the **Federal Register** that additional quota is available and the season is reopened.

FOR FURTHER INFORMATION CONTACT: Guy DuBeck or Karyl Brewster-Geisz, 301–427–8503; fax 301–713–1917.

SUPPLEMENTARY INFORMATION: The Atlantic shark fisheries are managed under the 2006 Consolidated Highly Migratory Species (HMS) Fishery Management Plan (FMP), its amendments, and implementing regulations (50 CFR part 635) issued under authority of the Magnuson-Stevens Fishery Conservation and Management Act (16 U.S.C. 1801 *et seq.*).

Under § 635.5(b)(1), dealers must electronically submit reports on sharks that are first received from a vessel on a weekly basis through a NMFS-approved electronic reporting system. Reports must be received by no later than midnight, local time, of the first Tuesday following the end of the reporting week unless the dealer is otherwise notified by NMFS. Under § 635.28(b)(4), the quotas of certain species and/or management groups are linked. If quotas are linked, when the specified quota threshold for one management group or species is reached and that management group or species is closed, the linked management group or species closes at the same time (§ 635.28(b)(3)). The quotas for aggregated LCS and the hammerhead shark management groups in the western Gulf of Mexico sub-region are linked (§ 635.28(b)(4)(iii)). The blacktip shark quota in the western Gulf of Mexico sub-region is not linked to the aggregated LCS or hammerhead shark quotas. Regulations at § 635.28(b)(2) and (b)(5) authorize the closure of the blacktip shark fishery in the Gulf of Mexico at a regional or sub-regional level when landings have reached or are expected to reach 80 percent of the quota or, after considering certain criteria and relevant factors, before those situations occur.

Under § 635.28(b)(2) and (3), when NMFS calculates that the landings for any species and/or management group of either a non-linked or a linked group have reached or are projected to reach a threshold of 80 percent of the available quota, NMFS will file for publication with the Office of the Federal Register a notice of closure for all of the species and/or management groups of either a non-linked or linked group that will be effective no fewer than 5 days from date of filing. From the effective date and time of the closure until and if NMFS announces, via a

notice in the **Federal Register**, that additional quota is available and the season is reopened, the fisheries for all linked species and/or management groups and specified non-linked species and/or management groups are closed, even across fishing years.

On December 1, 2015 (80 FR 74999), NMFS announced that for 2016, the commercial western Gulf of Mexico blacktip shark sub-regional quota was 266.5 metric tons (mt) dressed weight (dw) (587,396 lb dw), the western Gulf of Mexico aggregated LCS sub-regional quota was 72.0 mt dw (158,724 lb dw), and the western Gulf of Mexico hammerhead shark sub-regional quota was 11.9 mt dw (29,421 lb dw). Dealer reports recently received through March 4, 2016, indicate that 60.6 mt dw or 84 percent of the available western Gulf of Mexico aggregated LCS sub-regional quota has been landed, that 13.8 mt dw or 116 percent of the available western Gulf of Mexico hammerhead shark sub-regional quota has been landed, and that 134.1 mt dw or 50 percent of the available western Gulf of Mexico blacktip shark sub-regional quota has been landed. Based on these dealer reports, the 80-percent limits specified for a closure notice in the regulations for the aggregated LCS and hammerhead shark management groups in the western Gulf of Mexico sub-region were exceeded as of March 4, 2016. Accordingly, NMFS is closing the commercial aggregated LCS and hammerhead management groups in the western Gulf of Mexico sub-region as of 11:30 p.m. local time March 12, 2016.

Regarding blacktip sharks in the western Gulf of Mexico sub-region, regulations at § 635.28(b)(5)(i) through (v) authorize the closure of the blacktip shark fishery before landings reach, or are expected to reach, 80 percent of the quota after considering the following criteria and other relevant factors: Season length based on available sub-regional quota and average sub-regional catch rates; variability in regional and/or sub-regional seasonal distribution, abundance, and migratory patterns; effects on accomplishing the objectives of the 2006 Consolidated HMS FMP and its amendments; amount of remaining shark quotas in the relevant sub-region; and regional and/or sub-regional catch rates of the relevant shark species or management groups. NMFS considered all of these criteria with respect to blacktip sharks in the western Gulf of Mexico sub-region, and in particular, considered sub-regional distribution and abundance (§ 635.28(b)(5)(ii)) and sub-regional catch rates (§ 635.28(b)(5)(v)). The directed shark fisheries in the western Gulf of Mexico sub-region exhibit a mixed species composition, with a high abundance and distribution of aggregated LCS caught in conjunction with blacktip sharks. As a result, NMFS believes that closing the aggregated LCS and hammerhead shark management groups while leaving only the blacktip shark fishery open in the western Gulf of Mexico sub-region could cause large numbers of regulatory discards of aggregated LCS species. Such discards could hinder the management goals and interfere with accomplishing the objectives of the 2006 Consolidated HMS FMP and its amendments (§ 635.28(b)(5)(iii)), which include preventing overfishing while achieving on a continuing basis optimum yield and rebuilding overfished shark stocks. Such discards would also be contrary to National Standard 9, which requires that management measures minimize bycatch and bycatch mortality, particularly if the discards are dead and are of overfished species. A single closure for the aggregated LCS, blacktip, and hammerhead management groups in the western Gulf of Mexico sub-region would minimize regulatory discards, and help prevent overfishing, of aggregated LCS in the western Gulf of Mexico sub-region, consistent with the Magnuson-Stevens Fishery Conservation and Management Act and the criteria at § 635.28(b)(5). Accordingly, NMFS is closing the commercial blacktip shark fishery in the western Gulf of Mexico sub-region as of 11:30 p.m. local time March 12, 2016.

All other shark species or management groups in the western Gulf of Mexico sub-region that are currently open will remain open, including the commercial Gulf of Mexico non-blacknose small coastal sharks (SCS), blue sharks, and pelagic sharks other than porbeagle or blue.

At § 635.27(b)(1), the boundary between the Gulf of Mexico region and the Atlantic region is defined as a line beginning on the East Coast of Florida at the mainland at 25°20.4′ N. lat, proceeding due east. Any water and land to the south and west of that boundary is considered for the purposes of monitoring and setting quotas, to be within the Gulf of Mexico region. The boundary between the western and eastern Gulf of Mexico sub-regions is drawn along 88°00′ W. long. (§ 635.27(b)(1)(ii)).

During the closure, retention of blacktip sharks, aggregated LCS, and/or hammerhead sharks in the western Gulf of Mexico sub-region is prohibited for persons fishing aboard vessels issued a commercial shark limited access permit under § 635.4. However, persons aboard a commercially permitted vessel that is also properly permitted to operate as a charter vessel or headboat for HMS and is engaged in a for-hire trip could fish under the recreational retention limits for sharks and ''no sale'' provisions (§ 635.22 (c)). Similarly, persons aboard a commercially permitted vessel that possesses a valid shark research permit under § 635.32 and has a NMFS-approved observer onboard may continue to harvest and sell blacktip sharks, aggregated LCS, and/or hammerhead sharks in the western Gulf of Mexico sub-region pursuant to the terms and conditions of the shark research permit.

During this closure, a shark dealer issued a permit pursuant to § 635.4 may not purchase or receive blacktip sharks, aggregated LCS, and/or hammerhead sharks in the western Gulf of Mexico sub-region from a vessel issued an Atlantic shark limited access permit (LAP), except that a permitted shark dealer or processor may possess blacktip sharks, aggregated LCS, and/or hammerhead sharks in the western Gulf of Mexico sub-region that were harvested, off-loaded, and sold, traded, or bartered prior to the effective date of the closure and were held in storage consistent with § 635.28(b)(5). Additionally, a permitted shark dealer or processor may possess blacktip sharks, aggregated LCS, and/or hammerhead sharks in the western Gulf of Mexico sub-region that were harvested by a vessel issued a valid shark research fishery permit per § 635.32 with a NMFS-approved observer onboard during the trip the sharks were taken on as long as the LCS research fishery quota remains open. Similarly, a shark dealer issued a permit pursuant to § 635.4 may, in accordance with relevant state regulations, purchase or receive blacktip sharks, aggregated LCS, and/or hammerhead sharks in the western Gulf of Mexico sub-region if the sharks were harvested, off-loaded, and sold, traded, or bartered from a vessel that fishes only in state waters and that has not been issued an Atlantic Shark LAP, HMS Angling permit, or HMS Charter/Headboat permit pursuant to § 635.4.

Classification

Pursuant to 5 U.S.C. 553(b)(B), the Assistant Administrator for Fisheries, NOAA (AA), finds that providing prior notice and public comment for this action is impracticable and contrary to the public interest because the fishery is currently underway and any delay in this action would result in overharvest of the quotas for these species and management groups and be inconsistent

with management requirements and objectives. Similarly, affording prior notice and opportunity for public comment on this action is contrary to the public interest because if a quota is exceeded, the stock may be negatively affected and fishermen ultimately could experience reductions in the available quota and a lack of fishing opportunities in future seasons. For these reasons, the AA also finds good cause to waive the 30-day delay in effective date pursuant to 5 U.S.C. 553(d)(3). This action is required under § 635.28(b)(3) and § 635.28(b)(5) and is exempt from review under Executive Order 12866.

Authority: 16 U.S.C. 1801 *et seq.*

Dated: March 7, 2016.

Emily H. Menashes,

Acting Director, Office of Sustainable Fisheries, National Marine Fisheries Service.

[FR Doc. 2016–05391 Filed 3–7–16; 4:15 pm]

BILLING CODE 3510–22–P

Proposed Rules

Federal Register
Vol. 81, No. 47
Thursday, March 10, 2016

This section of the FEDERAL REGISTER contains notices to the public of the proposed issuance of rules and regulations. The purpose of these notices is to give interested persons an opportunity to participate in the rule making prior to the adoption of the final rules.

DEPARTMENT OF AGRICULTURE

Agricultural Marketing Service

7 CFR Part 925

[Doc. No. AMS–SC–15–0077; SC16–925–1 PR]

Grapes Grown in a Designated Area of Southeastern California; Increased Assessment Rate

AGENCY: Agricultural Marketing Service, USDA.

ACTION: Proposed rule.

SUMMARY: This proposed rule would implement a recommendation from the California Desert Grape Administrative Committee (Committee) to increase the assessment rate established for the 2016 and subsequent fiscal periods from $0.0250 to $0.0300 per 18-pound lug of grapes handled under the marketing order (order). The Committee locally administers the order, and is comprised of producers and handlers of grapes grown in a designated area of southeastern California. Assessments upon grape handlers are used by the Committee to fund reasonable and necessary expenses of the program. The fiscal period began on January 1 and ends December 31. The assessment rate would remain in effect indefinitely unless modified, suspended, or terminated.

DATES: Comments must be received by March 25, 2016.

ADDRESSES: Interested persons are invited to submit written comments concerning this proposed rule. Comments must be sent to the Docket Clerk, Marketing Order and Agreement Division, Specialty Crops Program, AMS, USDA, 1400 Independence Avenue SW., STOP 0237, Washington, DC 20250–0237; Fax: (202) 720–8938; or Internet: *http://www.regulations.gov.* Comments should reference the docket number and the date and page number of this issue of the **Federal Register** and will be available for public inspection in the Office of the Docket Clerk during regular business hours, or can be viewed at: *http://www.regulations.gov.* All comments submitted in response to this proposed rule will be included in the record and will be made available to the public. Please be advised that the identity of the individuals or entities submitting the comments will be made public on the internet at the address provided above.

FOR FURTHER INFORMATION CONTACT: Kathie Notoro, Marketing Specialist, or Jeffrey Smutny, Regional Director, California Marketing Field Office, Marketing Order and Agreement Division, Specialty Crops Program, AMS, USDA; Telephone: (559) 487–5901, Fax: (559) 487–5906, or Email: *Kathie.Notoro@ams.usda.gov* or *Jeffrey.Smutny@ams.usda.gov.*

Small businesses may request information on complying with this regulation by contacting Antoinette Carter, Marketing Order and Agreement Division, Specialty Crops Program, AMS, USDA, 1400 Independence Avenue SW., STOP 0237, Washington, DC 20250–0237; Telephone: (202) 720–2491, Fax: (202) 720–8938, or Email: *Antoinette.Carter@ams.usda.gov.*

SUPPLEMENTARY INFORMATION: This proposed rule is issued under Marketing Order No. 925, as amended (7 CFR part 925), regulating the handling of grapes grown in a designated area of southeastern California. The order is effective under the Agricultural Marketing Agreement Act of 1937, as amended (7 U.S.C. 601–674), hereinafter referred to as the ''Act.''

The Department of Agriculture (USDA) is issuing this proposed rule in conformance with Executive Orders 12866, 13563, and 13175.

This proposed rule has been reviewed under Executive Order 12988, Civil Justice Reform. Under the marketing order now in effect, grape handlers in a designated area of southeastern California are subject to assessments. Funds to administer the order are derived from such assessments. It is intended that the assessment rate as proposed herein would be applicable to all assessable grapes beginning on January 1, 2016, and continue until amended, suspended, or terminated.

The Act provides that administrative proceedings must be exhausted before parties may file suit in court. Under section 608c(15)(A) of the Act, any handler subject to an order may file with USDA a petition stating that the order, any provision of the order, or any obligation imposed in connection with the order is not in accordance with law and request a modification of the order or to be exempted therefrom. Such handler is afforded the opportunity for a hearing on the petition. After the hearing, USDA would rule on the petition. The Act provides that the district court of the United States in any district in which the handler is an inhabitant, or has his or her principal place of business, has jurisdiction to review USDA's ruling on the petition, provided an action is filed not later than 20 days after the date of the entry of the ruling.

This proposed rule would increase the assessment rate established for the Committee for the 2016 and subsequent fiscal periods from $0.0250 to $0.0300 per 18-pound lug of grapes handled.

The grape order provides authority for the Committee, with the approval of USDA, to formulate an annual budget of expenses and collect assessments from handlers to administer the program. The members of the Committee are producers and handlers of grapes grown in a designated area of southeastern California. They are familiar with the Committee's needs and with the costs of goods and services in their local area and are thus in a position to formulate an appropriate budget and assessment rate. The assessment rate is formulated and discussed in a public meeting. Thus, all directly affected persons have an opportunity to participate and provide input.

For the 2015 and subsequent fiscal periods, the Committee recommended, and the USDA approved, an assessment rate that would continue in effect from fiscal period to fiscal period unless modified, suspended, or terminated by USDA based upon recommendation and information submitted by the Committee or other information available to USDA.

The Committee met on November 12, 2015, and unanimously recommended 2016 expenditures of $143,500, a contingency reserve fund of $6,500, and an assessment rate of $0.0300 per 18-pound lug of grapes handled. In comparison, last year's budgeted expenditures were $135,500. The Committee recommended a crop estimate of 5,000,000 18-pound lugs, which is lower than the 5,800,000 18-

pound lugs handled last year. The Committee also recommended carrying over a financial reserve of $47,500, which would increase to $54,000 if the contingency fund is not expended. The assessment rate of $0.0300 per 18-pound lug of grapes handled recommended by the Committee is $0.0050 higher than the $0.0250 rate currently in effect. The higher assessment rate, applied to shipments of 5,000,000 18-pound lugs, would generate $150,000 in revenue and be sufficient to cover anticipated expenses.

The major expenditures recommended by the Committee for the 2016 fiscal period include $28,500 for research, $20,080 for office expenses, $56,500 for management and compliance expenses, $25,000 for consultation services, and $6,500 for a contingency reserve. The $28,500 research project is a continuation of a vine study in progress by the University of California, Riverside. In comparison, major expenditures for the 2015 fiscal period included $15,500 for research, $17,000 for general office expenses, $62,750 for management and compliance expenses, $25,000 for consultation services, and $9,500 for a contingency reserve. Overall 2016 expenditures include a decrease in management and compliance expenses, and increases in office expenses, and research expenses.

The assessment rate recommended by the Committee was derived by evaluating several factors, including estimated shipments for the 2016 season, budgeted expenses, and the level of available financial reserves. The Committee determined that the $0.0300 assessment rate would generate $150,000 in revenue to cover the budgeted expenses of $143,500, and a contingency reserve fund of $6,500.

Reserve funds by the end of 2016 are projected to be $47,500 if the $6,500 added to the contingency fund is expended or $54,000 if it is not expended. Both amounts are well within the amount authorized under the order. Section 925.41 of the order permits the Committee to maintain approximately one fiscal period's expenses in reserve.

The proposed assessment rate would continue in effect indefinitely unless modified, suspended, or terminated by USDA based upon a recommendation and information submitted by the Committee or other available information.

Although this assessment rate would be in effect for an indefinite period, the Committee would continue to meet prior to or during each fiscal period to recommend a budget of expenses and consider recommendations for modification of the assessment rate. The dates and times of Committee meetings are available from the Committee or USDA. Committee meetings are open to the public and interested persons may express their views at these meetings. USDA would evaluate the Committee's recommendations and other available information to determine whether modification of the assessment rate is needed. Further rulemaking would be undertaken as necessary. The Committee's 2016 budget and those for subsequent fiscal periods would be reviewed and, as appropriate, approved by USDA.

Initial Regulatory Flexibility Analysis

Pursuant to requirements set forth in the Regulatory Flexibility Act (RFA) (5 U.S.C. 601–612), the Agricultural Marketing Service (AMS) has considered the economic impact of this proposed rule on small entities. Accordingly, AMS has prepared this initial regulatory flexibility analysis.

The purpose of the RFA is to fit regulatory actions to the scale of businesses subject to such actions in order that small businesses will not be unduly or disproportionately burdened. Marketing orders issued pursuant to the Act, and the rules issued thereunder, are unique in that they are brought about through group action of essentially small entities acting on their own behalf.

There are approximately 13 handlers of southeastern California grapes who are subject to regulation under the marketing order and about 41 grape producers in the production area. Small agricultural service firms are defined by the Small Business Administration (13 CFR 121.201) as those having annual receipts of less than $7,500,000, and small agricultural producers are defined as those whose annual receipts are less than $750,000. Ten of the 13 handlers subject to regulation have annual grape sales of less than $7,500,000, according to USDA Market News Service and Committee data. In addition, information from the Committee and USDA's Market News indicates that at least 10 of 41 producers have annual receipts of less than $750,000. Thus, it may be concluded that a majority of the grape handlers regulated under the order and about 10 of the producers could be classified as small entities under the Small Business Administration's definitions.

This proposed rule would increase the assessment rate established for the Committee and collected from handlers for the 2016 and subsequent fiscal periods from $0.0250 to $0.0300 per 18-pound lug of grapes. The Committee unanimously recommended 2016 expenditures of $143,500, a contingency reserve fund of $6,500, and an assessment rate of $0.0300 per 18-pound lug of grapes handled. The proposed assessment rate of $0.0300 is $0.0050 higher than the 2015 rate currently in effect. The quantity of assessable grapes for the 2016 season is estimated at 5,000,000 18-pound lugs. Thus, the $0.0300 rate should generate $150,000 in income. In addition, reserve funds at the end of the year are projected to be $54,000, which is well within the order's limitation of approximately one fiscal period's expenses.

The major expenditures recommended by the Committee for the 2016 fiscal period include $28,500 for research, $20,080 for general office expenses, $56,500 for management and compliance expenses, $25,000 for consultation services and $6,500 for the contingency reserve. In comparison, major expenditures for the 2015 fiscal period included $15,500 for research, $17,000 for general office expenses, $62,750 for management and compliance expenses, $25,000 for consultation services, and $9,500 for a contingency reserve. Overall 2016 expenditures include a decrease in management and compliance expenses, and increases in general office expenses, and research expenses.

Prior to arriving at this budget, the Committee considered alternative expenditures and assessment rates, to include not increasing the $0.0250 assessment rate currently in effect. Based on a crop estimate of 5,000,000 18-pound lugs, the Committee ultimately determined that increasing the assessment rate to $0.0300 would generate sufficient funds to cover budgeted expenses. Reserve funds at the end of the 2016 fiscal period are projected to be $47,500 if the $6,500 contingency fund is expended or $54,000 if it is not expended. These amounts are well within the amount authorized under the order.

A review of historical crop and price information, as well as preliminary information pertaining to the upcoming fiscal period, indicates that the shipping point price for the 2015 season averaged about $22.75 per 18-pound lug of California desert grapes handled. If the 2016 price is similar to the 2015 price, estimated assessment revenue as a percentage of total estimated handler revenue would be 0.13 percent for the 2016 season ($0.0300 divided by $22.75 per 18-pound lug).

This action would increase the assessment obligation imposed on handlers. While assessments impose

some additional costs on handlers, the costs are minimal and uniform on all handlers. However, these costs would be offset by the benefits derived from the operation of the marketing order. In addition, the Committee's meeting was widely publicized throughout the grape production area and all interested persons were invited to attend and participate in Committee deliberations on all issues. Like all Committee meetings, the November 12, 2015, meeting was a public meeting and all entities, both large and small, were able to express views on this issue. Finally, interested persons are invited to submit comments on this proposed rule, including the regulatory and informational impacts of this action on small businesses.

In accordance with the Paperwork Reduction Act of 1995 (44 U.S.C. Chapter 35), the order's information collection requirements have been previously approved by the Office of Management and Budget (OMB) and assigned OMB No. 0581–0189. No changes in those requirements as a result of this action are necessary. Should any changes become necessary, they would be submitted to OMB for approval.

This proposed rule would impose no additional reporting or recordkeeping requirements on either small or large California grape handlers. As with all Federal marketing order programs, reports and forms are periodically reviewed to reduce information requirements and duplication by industry and public sector agencies.

AMS is committed to complying with the E-Government Act, to promote the use of the internet and other information technologies to provide increased opportunities for citizen access to Government information and services, and for other purposes.

USDA has not identified any relevant Federal rules that duplicate, overlap, or conflict with this action.

A small business guide on complying with fruit, vegetable, and specialty crop marketing agreements and orders may be viewed at: *http://www.ams.usda.gov/rules-regulations/moa/small-businesses.* Any questions about the compliance guide should be sent to Antoinette Carter at the previously-mentioned address in the **FOR FURTHER INFORMATION CONTACT** section.

A 15-day comment period is provided to allow interested persons to respond to this proposed rule. Fifteen days is deemed appropriate because: (1) The 2016 fiscal period begins on January 1, 2016, and the order requires that the rate of assessment for each fiscal period apply to all assessable grapes handled during such fiscal period; (2) the Committee needs to have sufficient funds to pay its expenses, which are incurred on a continuous basis; and (3) handlers are aware of this action, which was unanimously recommended by the Committee at a public meeting and is similar to other assessment rate actions issued in past years.

List of Subjects in 7 CFR Part 925

Grapes, Marketing agreements, Reporting and recordkeeping requirements.

For the reasons set forth in the preamble, 7 CFR part 925 is proposed to be amended as follows:

PART 925—GRAPES GROWN IN A DESIGNATED AREA OF SOUTHEASTERN CALIFORNIA

■ 1. The authority citation for 7 CFR part 925 continues to read as follows:

Authority: 7 U.S.C. 601–674.

■ 2. Section 925.215 is revised to read as follows:

§ 925.215 Assessment rate.

On and after January 1, 2016, an assessment rate of $0.0300 per 18-pound lug is established for grapes grown in a designated area of southeastern California.

Dated: March 3, 2016.

Elanor Starmer,

Acting Administrator, Agricultural Marketing Service.

[FR Doc. 2016–05420 Filed 3–9–16; 8:45 am]

BILLING CODE P

DEPARTMENT OF HEALTH AND HUMAN SERVICES

Food and Drug Administration

21 CFR Part 888

[Docket No. FDA–2015–N–3785]

Medical Devices; Orthopedic Devices; Classification of Posterior Cervical Screw Systems

AGENCY: Food and Drug Administration, HHS.

ACTION: Proposed rule.

SUMMARY: The Food and Drug Administration (FDA or Agency) is proposing to classify posterior cervical screw systems into class II (special controls) and to continue to require premarket notification to provide a reasonable assurance of safety and effectiveness of the device. A posterior cervical screw system is a prescription device used to provide immobilization and stabilization in the cervical spine as an adjunct to spinal fusion surgery. The term ''posterior cervical screw systems'' is used to distinguish these devices from currently classified pedicle screw spinal systems cleared for use in other spinal regions.

DATES: Submit either electronic or written comments by June 8, 2016. See section IV of this document for the proposed effective date of a final rule that may issue based on this proposal.

ADDRESSES: You may submit comments as follows:

Electronic Submissions

Submit electronic comments in the following way:

• *Federal eRulemaking Portal: http://www.regulations.gov.* Follow the instructions for submitting comments. Comments submitted electronically, including attachments, to *http://www.regulations.gov* will be posted to the docket unchanged. Because your comment will be made public, you are solely responsible for ensuring that your comment does not include any confidential information that you or a third party may not wish to be posted, such as medical information, your or anyone else's Social Security number, or confidential business information, such as a manufacturing process. Please note that if you include your name, contact information, or other information that identifies you in the body of your comments, that information will be posted on *http://www.regulations.gov.*

• If you want to submit a comment with confidential information that you do not wish to be made available to the public, submit the comment as a written/paper submission and in the manner detailed (see ''Written/Paper Submissions'' and ''Instructions'').

Written/Paper Submissions

Submit written/paper submissions as follows:

• *Mail/Hand delivery/Courier (for written/paper submissions):* Division of Dockets Management (HFA–305), Food and Drug Administration, 5630 Fishers Lane, Rm. 1061, Rockville, MD 20852.

• For written/paper comments submitted to the Division of Dockets Management, FDA will post your comment, as well as any attachments, except for information submitted, marked and identified, as confidential, if submitted as detailed in ''Instructions.''

Instructions: All submissions received must include the Docket No. FDA–2015–N–3785 for ''Medical Devices; Orthopedic Devices; Classification of Posterior Cervical Screw Systems.''

Received comments will be placed in the docket and, except for those submitted as ''Confidential Submissions,'' publicly viewable at *http://www.regulations.gov* or at the Division of Dockets Management between 9 a.m. and 4 p.m., Monday through Friday.

• Confidential Submissions—To submit a comment with confidential information that you do not wish to be made publicly available, submit your comments only as a written/paper submission. You should submit two copies total. One copy will include the information you claim to be confidential with a heading or cover note that states ''THIS DOCUMENT CONTAINS CONFIDENTIAL INFORMATION.'' The Agency will review this copy, including the claimed confidential information, in its consideration of comments. The second copy, which will have the claimed confidential information redacted/blacked out, will be available for public viewing and posted on *http://www.regulations.gov.* Submit both copies to the Division of Dockets Management. If you do not wish your name and contact information to be made publicly available, you can provide this information on the cover sheet and not in the body of your comments and you must identify this information as ''confidential.'' Any information marked as ''confidential'' will not be disclosed except in accordance with 21 CFR 10.20 and other applicable disclosure law. For more information about FDA's posting of comments to public dockets, see 80 FR 56469, September 18, 2015, or access the information at: *http://www.fda.gov/regulatoryinformation/dockets/default.htm.*

Docket: For access to the docket to read background documents or the electronic and written/paper comments received, go to *http://www.regulations.gov* and insert the docket number, found in brackets in the heading of this document, into the ''Search'' box and follow the prompts and/or go to the Division of Dockets Management, 5630 Fishers Lane, Rm. 1061, Rockville, MD 20852.

FOR FURTHER INFORMATION CONTACT:

Genevieve Hill, Center for Devices and Radiological Health, Food and Drug Administration, 10903 New Hampshire Ave., Bldg. 66, Rm. 1457, Silver Spring, MD 20993–0002, 301–796–6423, *genevieve.hill@fda.hhs.gov.*

SUPPLEMENTARY INFORMATION:

I. Background

A. Statutory and Regulatory Authorities

The Federal Food, Drug, and Cosmetic Act (the FD&C Act) (21 U.S.C. 301 *et seq.*), as amended, established a comprehensive system for the regulation of medical devices intended for human use. Section 513 of the FD&C Act (21 U.S.C. 360c) established three categories (classes) of devices, reflecting the regulatory controls needed to provide reasonable assurance of their safety and effectiveness. The three categories of devices are class I (general controls), class II (special controls), and class III (premarket approval).

Section 513(a) of the FD&C Act defines the three classes of devices. Class I devices are those devices for which the general controls of the FD&C Act (controls authorized by or under section 501, 502, 510, 516, 518, 519, or 520 (21 U.S.C. 351, 352, 360, 360f, 360h, 360i, or 360j) or any combination of such sections) are sufficient to provide reasonable assurance of safety and effectiveness; or those devices for which insufficient information exists to determine that general controls are sufficient to provide reasonable assurance of safety and effectiveness or to establish special controls to provide such assurance, but because the devices are not purported or represented to be for a use in supporting or sustaining human life or for a use which is of substantial importance in preventing impairment of human health, and do not present a potential unreasonable risk of illness or injury, are to be regulated by general controls (section 513(a)(1)(A) of the FD&C Act). Class II devices are those devices for which general controls by themselves are insufficient to provide reasonable assurance of safety and effectiveness, but for which there is sufficient information to establish special controls to provide such assurance, including the issue of performance standards, postmarket surveillance, patient registries, development and dissemination of guidelines, recommendations, and other appropriate actions the Agency deems necessary to provide such assurance (section 513(a)(1)(B) of the FD&C Act). Class III devices are those devices for which insufficient information exists to determine that general controls and special controls would provide a reasonable assurance of safety and effectiveness, and are purported or represented for a use in supporting or sustaining human life or for a use which is of substantial importance in preventing impairment of human health, or present a potential unreasonable risk of illness or injury (section 513(a)(1)(C) of the FD&C Act).

FDA refers to devices that were in commercial distribution before May 28, 1976 (the date of enactment of the Medical Device Amendments of 1976), as ''preamendments devices.'' Under section 513(d)(1) of the FD&C Act, FDA classifies these devices after FDA: (1) Receives a recommendation from a device classification panel (an FDA advisory committee); (2) publishes the panel's recommendation for comment, along with a proposed regulation classifying the device; and (3) publishes a final regulation classifying the device. FDA has classified most preamendments devices under these procedures.

A person may market a preamendments device that has been classified into class III and devices found to be substantially equivalent by means of premarket notification procedures (510(k)) to such a preamendments device or to a device within that type without submission of a premarket approval application (PMA) until FDA issues a final order under section 515(b) of the FD&C Act (21 U.S.C. 360e(b)) requiring premarket approval or until the device is subsequently reclassified into class I or class II.

FDA refers to devices that were not in commercial distribution prior to May 28, 1976 as ''postamendments devices.'' These devices are automatically classified by statute (section 513(f) of the FD&C Act) into class III without any FDA rulemaking process. These devices remain in class III and require premarket approval unless, and until, the device is reclassified into class I or II or FDA issues an order finding the device to be substantially equivalent, under section 513(i) of the FD&C Act, to a predicate device that does not require premarket approval. The Agency determines whether new devices are substantially equivalent to predicate devices by means of premarket notification procedures in section 510(k) of the FD&C Act (21 U.S.C. 360(k)) and part 807 of the regulations (21 CFR part 807).

B. Regulatory History of the Device

The regulatory history of posterior cervical screw systems arose from that of pedicle screw spinal systems, which are medical devices similar in design and principle of operation, but differ based on anatomic use in the spine and their indications for use. Both device systems are comprised of various interconnecting components such as longitudinal members (*i.e.,* rods, plates) and screws that are configured per the

patient's anatomy and implanted into the posterior spine to provide stabilization as bony fusion occurs. After the enactment of the Medical Device Amendments of 1976, FDA commenced to identify and classify all preamendments devices, in accordance with section 513(b) of the FD&C Act. In the **Federal Register** of September 4, 1987 (52 FR 33686), FDA classified a total of 77 generic types of orthopedic devices. Neither pedicle screw spinal systems nor posterior cervical screw systems were identified in this initial effort.

In July 1998, FDA issued a final rule (63 FR 40025, July 27, 1998) classifying pedicle screw spinal systems as class II devices, and a technical amendment to this rule was published on May 22, 2001 (66 FR 28051). In the technical amendment, FDA noted that pedicle screw systems for the following intended uses in the cervical spine (which are now referred to as posterior cervical screw systems) were in use prior to May 28,1976 and are therefore considered preamendments devices: (1) Cervical spondylolisthesis (all grades and types); (2) cervical spondylolysis; (3) cervical degenerative disc disease; (4) degeneration of the cervical facets accompanied by instability; (5) cervical trauma (fracture and dislocation); and (6) revision of failed previous fusion surgery (pseudarthrosis) of the cervical spine. Since 2001, FDA has regulated posterior cervical screw systems as unclassified preamendments devices requiring premarket notification (510(k)). Posterior cervical screw systems currently on the market have been determined to be substantially equivalent to devices that were in commercial distribution prior to May 28, 1976.

On April 9, 2009, FDA published an order under sections 515(i) and 519 of the FD&C Act (515(i) order) for the submission of safety and effective information on pedicle screw spinal systems with certain indications for use (74 FR 16214). In response to that order, FDA received a request from the Orthopedic Surgical Manufacturers Association (OSMA) to classify posterior cervical screw systems into class II (special controls). Because this request was considered to be outside the scope of the 515(i) order related to pedicle screw spinal systems, FDA requested that OSMA submit a separate petition for classification of posterior cervical screw systems. OSMA submitted the requested petition on November 22, 2011, under Docket No. FDA–2011–P–0851–0001/CCP (Ref. 1). FDA consulted with the Orthopaedic and Rehabilitation Devices Panel (the Panel), an FDA advisory committee, regarding the classification of this device type on September 21, 2012 (Ref. 2). At the Panel meeting, the Panel recommended that posterior cervical screw systems be classified as class II with special controls.

II. Recommendation of the Panel

During a public meeting held on September 21, 2012, the Panel made recommendations regarding the classification and regulatory controls for posterior cervical screw systems.

A. Identification

FDA is proposing the following identification for posterior cervical screw systems based on the Panel's recommendations and the Agency's review. Posterior cervical screw systems utilizing pedicle and lateral mass screws, implanted from the C1 to C7 levels, are multiple component devices, made from a variety of materials, including metallic alloys. Posterior cervical instrumentation generally involves use of a fixation system comprised of both longitudinal members and screws that can span various combinations of spinal levels from the occiput to the upper thoracic spine. Cervical lateral mass and pedicle screws serve as the primary bone anchor points and require selection based on individual patient anatomy, as determined by preoperative cross-sectional imaging. Posterior cervical screw systems consist of a bone anchor via screws (*i.e.,* occipital screws, cervical lateral mass screws, cervical pedicle screws, C2 pars screws, C2 translaminar screws, C2 transarticular screws), longitudinal members (*e.g.,* plates, rods) and optional transverse connectors. An interconnection mechanism (*e.g.,* offset connector, nuts, screws, or bolts) may be utilized to link the anchor and longitudinal member. These posterior cervical screw systems are statically fixed devices, only intended to be used as an adjunct to fusion and do not include any dynamic features, which may include, but are not limited to: Non-uniform and/or non-metallic longitudinal elements, features that allow more motion or flexibility compared to traditional rigid systems, or features that do not provide the system immediate rigid fixation.

B. Recommended Classification of the Panel

The Panel recommended that posterior cervical screw systems be classified into class II (special controls).

C. Summary of Reasons for Recommendation

The Panel considered the panel members' personal knowledge of and clinical experience with the device type, as well as the history of safety and effectiveness of the device over many years of clinical use. The Panel recommended that posterior cervical screw systems be classified into class II as an adjunct to fusion for the following acute and chronic instabilities of the cervical spine and craniocervical junction: (1) Traumatic spinal fractures and/or traumatic dislocations; instability or deformity; (2) failed previous fusions (*e.g.,* pseudarthrosis); (3) tumors involving the cervical spine; and (4) degenerative disease, including intractable radiculopathy and/or myelopathy, neck and/or arm pain of discogenic origin as confirmed by radiographic studies, and degenerative disease of the facets with instability. These systems are also intended to restore the integrity of the spinal column even in the absence of fusion for a limited time period in patients with advanced stage tumors involving the cervical spine in whom life expectancy is of insufficient duration to permit achievement of fusion. The Panel also found that there is reasonable evidence to support use of posterior cervical screws as an adjunct to fusion in the pediatric population. In addition, there was panel consensus supporting the use of posterior cervical screws for non-fusion treatment for a limited time period in patients with advanced stage tumors involving the cervical spine in whom life expectancy is of insufficient duration to permit achievement of fusion; the Panel emphasized that their discussions were limited to this narrow patient population and should not be extrapolated to other non-fusion applications or technologies (*e.g.,* dynamic stabilization systems).

The Panel also recommended that posterior cervical screw systems be classified into class II because special controls, together with general controls, would provide reasonable assurance of their safety and effectiveness. The risks to health for this device type are known and can be adequately mitigated by special controls (such as mechanical testing, biocompatibility, and labeling).

D. Risks to Health

Based on the Panel's discussion and recommendations in addition to comprehensive literature reviews and analyses by OSMA and FDA, the risks to health associated with posterior cervical screw systems and the proposed measures to mitigate these

risks are identified in the following list and in table 1. The identified risks to health are identical to those proposed by FDA during the September 21, 2012, panel meeting, with the addition of risks associated with the presence of vertebral arteries, as recommended by FDA with panel agreement. FDA determined that the following risks to health are associated with its use:

- *Device failure*—Components may deform, fracture, wear, loosen, or disassemble, resulting in a mechanical or functional failure.
- *Failure at the bone/implant interface*—Components may loosen or disengage from the bone.
- *Tissue injury*—Intraoperative and postoperative risks of tissue injury include: Bone fracture, injury to blood vessels or viscera, neurologic injury, dural tear or cerebrospinal fluid leak, skin penetration or irritation, and postoperative wound problems, including infection, hematoma/seroma.
- *Adverse tissue reactions*—Adverse tissue reactions include: Foreign body response, metal allergy, and metal toxicity.
- *Device malposition*—Risks of device malposition may include difficulty or inability to implant the device components or incorrect placement of the device.
- *Pseudarthrosis*—The risk of nonunion, or pseudarthrosis, signifies failure of bony fusion and potential instability or pain.
- *Adverse clinical sequelae*—Adverse clinical sequelae may include the risk of new or unresolved neck pain, new or worsened neurologic deficit/injury, or loss of correction.

The risks to health presented to the 2012 Panel such as cardiac, respiratory, and death are considered general surgical risks associated with the surgical procedure to implant posterior cervical screw systems; these risks are not directly associated with posterior cervical screw systems and therefore are not included in the previous list of risks. Failure of the posterior cervical screw system as a result of the risks to health listed may result in the need for reoperation, revision, or removal.

While presented to the Panel as a potential risk, graft settling would not be considered a device-specific risk. Rather, it represents a potential mechanism for the development of pseudarthrosis, instability, or lack of correction. Further, graft settling is expected in patients undergoing fusion surgery and does not necessarily result in adverse clinical sequelae. Thus this item does not specifically appear in the previous list.

E. Proposed Special Controls

FDA believes that the following special controls, in addition to general controls, are sufficient to mitigate the risks to health described in section II.D. and provide reasonable assurance of safety and effectiveness of the device.

- Design characteristics of the device, including engineering schematics, must ensure that the geometry and material composition are consistent with the intended use.
- Nonclinical performance testing must demonstrate the mechanical function and durability of the implant.
- Device must be demonstrated to be biocompatible.
- Validation testing must demonstrate the cleanliness and sterility of, or the ability to clean and sterilize, the device components and device-specific instruments.
- Labeling must bear all information required for the safe and effective use of the device, specifically including the following:
  - ○ Clear description of the technological features of the device, including identification of device materials and the principles of device operation;
  - ○ intended use and indications for use including levels of fixation;
  - ○ device-specific warnings, precautions, and contraindications that include the following statements:
    - ▪ ''Precaution: Pre-operative planning prior to implantation of posterior cervical lateral mass and pedicle screw spinal systems should include review of cross-sectional imaging studies (*e.g.,* CT and/or MRI imaging) to evaluate the patient's cervical anatomy including the transverse foramen and the course of the vertebral arteries. If any findings would compromise the placement of lateral mass or pedicle screws, other surgical methods should be considered. In addition, use of intraoperative imaging should be considered to guide and/or verify device placement, as necessary.''
    - ▪ ''Precaution: Use of posterior cervical pedicle screw fixation at the C3 through C6 spinal levels requires careful consideration and planning beyond that required for lateral mass screws placed at these spinal levels, given the proximity of the vertebral arteries and neurologic structures in relation to the cervical pedicles at these levels.''
  - ○ identification of magnetic resonance (MR) compatibility status;
  - ○ cleaning and sterilization instructions for devices and instruments that are provided non-sterile to the end user; and
  - ○ detailed instructions of each surgical step, including device removal, accompanied by magnified illustrations.

Table 1 summarizes the risks to health described in section II.D. and the proposed special controls that are sufficient to mitigate these risks.

TABLE 1—SUMMARY OF RISKS TO HEALTH AND PROPOSED SPECIAL CONTROLS

Risk to health	Method of mitigation (i.e., special control)
Device Failure	Design Characteristics. Nonclinical Performance Testing. Labeling.
Failure of Bone Implant Interface	Design Characteristics. Biocompatibility. Nonclinical Performance Testing. Labeling.
Tissue Injury	Labeling.
Adverse Tissue Reactions	Design Characteristics. Biocompatibility. Sterility. Labeling.
Device Malposition	Labeling.
Pseudarthrosis	Nonclinical Performance Testing. Biocompatibility. Labeling.
Adverse Clinical Sequelae	Labeling.

Furthermore, FDA is proposing that posterior cervical screw systems be prescription devices. Prescription devices must be used in accordance with 21 CFR 801.109. Prescription-use restrictions are a type of general controls as defined in section 513(a)(1)(A)(i) of the FD&C Act.

III. Proposed Classification and FDA's Finding

In preparation for the September 2012 panel meeting and to better inform the Agency's proposed classification of posterior cervical screw systems as described in this proposed rule, FDA conducted a review of the literature that included relevant scientific and medical information published through July 2012 (see Section 6 of FDA's Panel Executive Summary, Ref. 2) as well as adverse events in FDA's Manufacturer and User Facility Device Experience (MAUDE) database (see Section 7 of FDA's Panel Executive Summary, Ref. 2). FDA does not believe that new or different information has become available since the September 2012 panel meeting that would alter FDA's findings. Based upon FDA's review of the literature and adverse events and FDA's continued premarket and postmarket experience with the device type, FDA agrees with the Panel's recommendation that posterior cervical screw systems be classified into class II. FDA is proposing to classify these devices into class II because general controls alone are insufficient to provide reasonable assurance of the safety and effectiveness of these implantable devices (see section II.D.), as presented and discussed during the September 21, 2012, panel meeting (Ref. 2). FDA also believes there is sufficient information to establish special controls to mitigate the known risks of the device. Therefore, FDA proposes that posterior cervical screw systems be classified into class II. The special controls, in addition to general controls, will provide reasonable assurance of the safety and effectiveness of the device.

IV. Proposed Effective Date

FDA proposes that this proposed rule, if finalized, will become effective 30 days after its date of publication in the **Federal Register**. In addition, FDA proposes that once the final rule is in effect, manufacturers of posterior cervical screw systems as defined in section II.A. that have not been offered for sale prior to the effective date of the final rule must obtain 510(k) clearance before marketing their devices and comply with the special controls.

FDA notes that a firm who markets a device that is intended for use as a posterior cervical screw system as identified in section II.A., as well as other uses, that was legally in commercial distribution before May 28, 1976, or who markets a device found to be substantially equivalent to such a device and who does not intend to market such device for uses other than as a posterior cervical screw as defined in section II.A., may remove the other intended uses from the device's labeling and continue marketing the device without submitting a new 510(k). In addition, such posterior cervical screw systems must comply with the special controls.

V. Environmental Impact, No Significant Impact

The Agency has determined under 21 CFR 25.34(b) that this action is of a type that does not individually or cumulatively have a significant effect on the human environment. Therefore, neither an environmental assessment nor an environmental impact statement is required.

VI. Economic Analysis of Impacts

We have examined the impacts of the proposed rule under Executive Order 12866, Executive Order 13563, the Regulatory Flexibility Act (5 U.S.C. 601–612), and the Unfunded Mandates Reform Act of 1995 (Pub. L. 104–4). Executive Orders 12866 and 13563 direct us to assess all costs and benefits of available regulatory alternatives and, when regulation is necessary, to select regulatory approaches that maximize net benefits (including potential economic, environmental, public health and safety, and other advantages; distributive impacts; and equity). We have developed a comprehensive Economic Analysis of Impacts that assesses the impacts of the proposed rule. We believe that this proposed rule is not a significant regulatory action as defined by Executive Order 12866.

The Regulatory Flexibility Act requires us to analyze regulatory options that would minimize any significant impact of a rule on small entities. Because: (1) The proposed regulation would classify a previously unclassified preamendment device type; (2) only five registered establishments are listed in the Establishment Registration and Device Listing database that would be affected by the proposed rule; and (3) the proposed regulation designating the classification of posterior cervical screw systems as class II is consistent with the historical regulatory oversight given to this device type, we proposed to certify that the rule will not have a significant economic impact on a substantial number of small entities.

The Unfunded Mandates Reform Act of 1995 (section 202(a)) requires us to prepare a written statement, which includes an assessment of anticipated costs and benefits, before proposing ''any rule that includes any Federal mandate that may result in the expenditure by State, local, and tribal governments, in the aggregate, or by the private sector, of $100,000,000 or more (adjusted annually for inflation) in any one year.'' The current threshold after adjustment for inflation is $144 million, using the most current (2014) Implicit Price Deflator for the Gross Domestic Product. This proposed rule would not result in an expenditure in any year that meets or exceeds this amount.

This rule proposes to classify posterior cervical screw systems as class II devices with special controls. These devices are currently unclassified. Currently, manufacturers are subject to premarket requirements similar to class II devices, with producers receiving clearance to market via a 510(k) premarket notification submission without a PMA requirement. We have concluded that special controls in addition to general controls are sufficient for ensuring the safety and effectiveness of these devices and that these devices may be classified as class II (special controls).

FDA's Registration and Listing database identifies two large manufacturers of three posterior cervical screw systems (product code NKG). Manufacturers of these devices will need to edit any current labeling to reflect requirements of the proposed rule. This is considered a major label change because of the addition of precaution statements. The estimated cost of this labeling change is $13,189 per product for an estimated total cost of $39,567 (3 × $13,189). Any currently marketed devices seeking marketing authorization as posterior cervical screw systems would incur similar costs. We welcome comments on the number of applications we may receive from firms pursuing marketing authorization for currently marketed products as posterior cervical screw systems.

The proposed rule would require that manufacturers who wish to market these devices submit 510(k) premarket notifications and comply with the proposed special controls. It is not expected that manufacturers of devices already on the market would need to submit new 510(k) notifications, 510(k) amendments, or add-to-files to demonstrate conformance with the proposed special controls. Any manufacturers seeking marketing authorization of posterior cervical screw systems would not incur additional

costs as a result of this rule because we already require 510(k) submissions for these devices. Hence, the proposed rule would not result in any significant change in how manufacturers prepare 510(k) submissions for the affected devices or in how we would review the submissions. Consequently, compliance with the special controls proposed for these devices would not yield significant new costs for manufacturers. Because the formal classification of the affected devices as class II is consistent with current Agency and industry practice, we conclude that the proposed rule, if finalized, would not impose any significant additional regulatory burden.

We invite comments on this analysis.

VII. Paperwork Reduction Act of 1995

This proposed rule establishes special controls that refer to currently approved collections of information found in other FDA regulations. These collections of information are subject to review by the Office of Management and Budget (OMB) under the Paperwork Reduction Act of 1995 (the PRA) (44 U.S.C. 3501–3520). The collections of information in 21 CFR part 807, subpart E, have been approved under OMB control number 0910–0120; the collections of information in 21 CFR part 801 have been approved under OMB control number 0910–0485; the collections of information in 21 CFR part 807 have been approved under OMB control number 0910–0625. The precaution labeling provisions in proposed 21 CFR 888.3075(b)(5) are not subject to review by OMB because they do not constitute a ''collection of information'' under the PRA. Rather, the following labeling: (1) ''Precaution: Pre-operative planning prior to implantation of posterior cervical lateral mass and pedicle screw spinal systems should include review of cross-sectional imaging studies (*e.g.,* CT and/or MRI imaging) to evaluate the patient's cervical anatomy including the transverse foramen and the course of the vertebral arteries. If any findings would compromise the placement of lateral mass or pedicle screws, other surgical methods should be considered. In addition, use of intraoperative imaging should be considered to guide and/or verify device placement, as necessary.'' (2) ''Precaution: Use of posterior cervical pedicle screw fixation at the C3 through C6 spinal levels requires careful consideration and planning beyond that required for lateral mass screws placed at these spinal levels, given the proximity of the vertebral arteries and neurologic structures in relation to the cervical pedicles at these levels.'' are a ''public disclosure of information originally supplied by the Federal government to the recipient for the purpose of disclosure to the public'' (5 CFR 1320.3(c)(2)).

VIII. References

The following references are on display in the Division of Dockets Management (see **ADDRESSES**) and are available for viewing by interested persons between 9 a.m. and 4 p.m., Monday through Friday. FDA has verified the Web site address, as of the date this document publishes in the **Federal Register**, but Web sites are subject to change over time.

1. Orthopedic Surgical Manufacturers Association Reclassification Petition filed on November 23, 2011, to support classification of pedicle and lateral mass screws for cervical spine use from unclassified status to class II. Available at *www.regulations.gov,* the docket number is FDA–2011–P–0851.

2. Transcript and other meeting materials from the Food and Drug Administration Orthopedic Devices Panel Meeting, September 21, 2012, (*http://www.fda.gov/AdvisoryCommittees/CommitteesMeetingMaterials/MedicalDevices/MedicalDevicesAdvisoryCommittee/OrthopaedicandRehabilitationDevicesPanel/ucm309184.htm*).

List of Subjects in 21 CFR Part 888

Medical devices.

Therefore, under the Federal Food, Drug, and Cosmetic Act and under authority delegated to the Commissioner of Food and Drugs, FDA proposes to amend 21 CFR part 888 as follows:

PART 888—ORTHOPEDIC DEVICES

■ 1. The authority citation for 21 CFR part 888 continues to read as follows:

Authority: 21 U.S.C. 351, 360, 360c, 360e, 360j, 371.

■ 2. Add § 888.3075 to subpart D to read as follows:

§ 888.3075 Posterior cervical screw system.

(a) *Identification.* Posterior cervical screw systems, implanted from the C1 to C7 levels, are prescription devices comprised of multiple components, made from a variety of materials, including metallic alloys. Posterior cervical instrumentation generally involves use of a fixation system comprised of both longitudinal members and screws that can span various combinations of spinal levels from the occiput to the upper thoracic spine. Cervical lateral mass and pedicle screws serve as the primary bone anchor points and require selection based on individual patient anatomy, as determined by preoperative cross-sectional imaging. Posterior cervical screw systems consist of a bone anchor via screws (*i.e.,* occipital screws, cervical lateral mass screws, cervical pedicle screws, C2 pars screws, C2 translaminar screws, C2 transarticular screws), longitudinal members (*e.g.,* plates, rods) and optional transverse connectors. An interconnection mechanism (*e.g.,* offset connector, nuts, screws, or bolts) may be utilized to link the anchor and longitudinal member. These posterior cervical screw systems are intended to provide immobilization and stabilization of spinal segments (C1 to C7 levels) in patients as an adjunct to fusion for the following acute and chronic instabilities of the cervical spine and/or craniocervical junction and/or cervicothoracic junction: Traumatic spinal fractures and/or traumatic dislocations; spinal deformities and related instabilities; failed previous fusions (*e.g.,* pseudarthrosis); tumors involving the cervical spine; inflammatory disorders; degenerative disease, including neck and/or arm pain of discogenic origin as confirmed by radiographic studies; degenerative disease of the facets with instability; and reconstruction following decompression to treat intractable radiculopathy and/or myelopathy. These systems are also intended to restore the integrity of the spinal column even in the absence of fusion for a limited time period in patients with advanced stage tumors involving the cervical spine in whom life expectancy is of insufficient duration to permit achievement of fusion.

(b) *Classification.* Class II (special controls). The special controls for posterior cervical screw systems are:

(1) Design characteristics of the device, including engineering schematics, must ensure that the geometry and material composition are consistent with the intended use.

(2) Nonclinical performance testing must demonstrate the mechanical function and durability of the implant.

(3) Device must be demonstrated to be biocompatible.

(4) Validation testing must demonstrate the cleanliness and sterility of, or the ability to clean and sterilize, the device components and device-specific instruments.

(5) Labeling must bear all information required for the safe and effective use of the device, specifically including the following:

(i) Clear description of the technological features of the device including identification of device

materials and the principles of device operation;

(ii) Intended use and indications for use including levels of fixation;

(iii) Device specific warnings, precautions, and contraindications that include the following statements:

(A) ''Precaution: Pre-operative planning prior to implantation of posterior cervical lateral mass and pedicle screw spinal systems should include review of cross-sectional imaging studies (*e.g.,* CT and/or MRI imaging) to evaluate the patient's cervical anatomy including the transverse foramen and the course of the vertebral arteries. If any findings would compromise the placement of lateral mass or pedicle screws, other surgical methods should be considered. In addition, use of intraoperative imaging should be considered to guide and/or verify device placement, as necessary.''

(B) ''Precaution: Use of posterior cervical pedicle screw fixation at the C3 through C6 spinal levels requires careful consideration and planning beyond that required for lateral mass screws placed at these spinal levels, given the proximity of the vertebral arteries and neurologic structures in relation to the cervical pedicles at these levels.''

(iv) Identification of magnetic resonance (MR) compatibility status;

(v) Sterilization and cleaning instructions for devices and instruments that are provided non-sterile to the end user, and;

(vi) Detailed instructions of each surgical step, including device removal, accompanied by magnified illustrations.

Dated: March 7, 2016.

Leslie Kux,

Associate Commissioner for Policy.

[FR Doc. 2016–05384 Filed 3–9–16; 8:45 am]

BILLING CODE 4164–01–P

DEPARTMENT OF HOUSING AND URBAN DEVELOPMENT

24 CFR Part 960

[Docket No. FR–5904–N–02]

Strengthening Oversight of Over-Income Tenancy in Public Housing Advance Notice of Proposed Rulemaking; Reopening of Comment Period

AGENCY: Office of the Assistant Secretary for Public and Indian Housing, HUD.

ACTION: Advanced notice of proposed rulemaking (ANPR); Reopening of Comment Period.

SUMMARY: HUD is extending the comment period for the Advanced Notice of Proposed Rulemaking. The original comment period ended on March 4, 2016, but HUD is reopening that period for 30 days to allow interested parties to prepare and submit their comments.

DATES: Comments on the ANPR published at 81 FR 5679, February 3, 2016 are due on or before April 11, 2016.

ADDRESSES: Interested persons are invited to submit comments to the Office of the General Counsel, Regulations Division, Department of Housing and Urban Development, 451 7th Street SW., Room 10276, Washington, DC 20410–0500. Communications should refer to the above docket number and title. There are two methods for submitting public comments.

1. Submission of Comments by Mail. Comments may be submitted by mail to the Regulations Division, Office of General Counsel, Department of Housing and Urban Development, 451 7th Street SW., Room 10276, Washington, DC 20410–0500. Due to security measures at all federal agencies, however, submission of comments by mail often results in delayed delivery. To ensure timely receipt of comments, HUD recommends that comments submitted by mail be submitted at least two weeks in advance of the public comment deadline.

2. Electronic Submission of Comments. Interested persons may submit comments electronically through the Federal eRulemaking Portal at *http://www.regulations.gov.* HUD strongly encourages commenters to submit comments electronically. Electronic submission of comments allows the commenter maximum time to prepare and submit a comment, ensures timely receipt by HUD, and enables HUD to make comments immediately available to the public. Comments submitted electronically through the *http://www.regulations.gov* Web site can be viewed by other commenters and interested members of the public. Commenters should follow instructions provided on that site to submit comments electronically.

Note: To receive consideration as public comments, comments must be submitted using one of the two methods specified above. Again, all submissions must refer to the docket number and title of the notice.

No Facsimile Comments. Facsimile (fax) comments are not acceptable.

Public Inspection of Comments. All comments and communications submitted to HUD will be available, for public inspection and copying between 8 a.m. and 5 p.m. weekdays at the above address. Due to security measures at the HUD Headquarters building, an advance appointment to review the public comments must be scheduled by calling the Regulations Division at (202) 708–3055 (this is not a toll-free number). Copies of all comments submitted are available for inspection and downloading at *http://www.regulations.gov.*

FOR FURTHER INFORMATION CONTACT: Todd Thomas, Office of Public and Indian Housing, Department of Housing and Urban Development, 451 7th Street SW., Room 4100, Washington, DC 20410–4000; telephone number (678) 732–2056 (this is not a toll-free number). Persons with hearing or speech impairments may contact this number via TTY by calling the toll-free Federal Relay Service at 800–877–8339.

SUPPLEMENTARY INFORMATION: On February 3, 2016, HUD published an advanced notice of proposed rulemaking, 81 FR 5679, February 3, 2016, seeking input from the public on many issues, including questions presented in this notice, including how HUD can structure policies to reduce the number of individuals and families in public housing whose incomes significantly exceed the income limit and have significantly exceeded the income limit for a sustained period of time after initial admission. In response to several requests, HUD is reopening the comment period for another 30 days.

Dated: March 2, 2016.

Jemine A. Bryon,

General Deputy Assistant, Secretary for Public and Indian Housing.

[FR Doc. 2016–05210 Filed 3–9–16; 8:45 am]

BILLING CODE 4210–67–P

DEPARTMENT OF THE TREASURY

Financial Crimes Enforcement Network

31 CFR Part 1010

RIN 1506–AB26

Financial Crimes Enforcement Network; Amendment to the Bank Secrecy Act Regulations—Reports of Foreign Financial Accounts

AGENCY: Financial Crimes Enforcement Network (''FinCEN''), Treasury.

ACTION: Notice of proposed rulemaking (''NPRM'').

SUMMARY: FinCEN, a bureau of the Department of the Treasury (''Treasury''), is proposing to revise the regulations implementing the Bank Secrecy Act (''BSA'') regarding Reports of Foreign Bank and Financial Accounts

(''FBAR''). The proposed rule would expand and clarify the exemptions for certain U.S. persons with signature or other authority over foreign financial accounts. In addition, the proposed rule would remove the special rules permitting limited account information to be reported when a U.S. person has financial interest in or signature authority over 25 or more foreign financial accounts. The proposed rule would also make several other changes, including a change to the filing date for FBAR reports due in 2017 and a revision to reflect electronic filing of FBARs.

DATES: Written comments on the notice of proposed rulemaking may be submitted on or before May 9, 2016.

ADDRESSES: Comments may be submitted, identified by Regulatory Identification Number (''RIN'') 1506–AB26, by any of the following methods:

- *Federal E-rulemaking Portal: http://www.regulations.gov.* Follow the instructions for submitting comments. Include RIN 1506–AB26 in the submission. Refer to Docket Number FINCEN–2014–0006.
- *Mail:* FinCEN, P.O. Box 39, Vienna, VA 22183. Include 1506–AB26 in the body of the text. Please submit comments by one method only. All comments submitted in response to this NPRM will become a matter of public record. Therefore, you should submit only information that you wish to make publicly available.
- *Inspection of comments:* The public dockets for FinCEN can be found at Regulations.gov. **Federal Register** notices published by FinCEN are searchable by docket number, RIN, or document title, among other things, and the docket number, RIN, and title may be found at the beginning of the notice. FinCEN uses the electronic, Internet-accessible dockets at Regulations.gov as their complete, official-record docket; all hard copies of materials that should be in the docket, including public comments, are electronically scanned and placed in the docket. In general, FinCEN will make all comments publicly available by posting them on *http://www.regulations.gov.*

FOR FURTHER INFORMATION CONTACT: FinCEN Resource Center at 1–800–767–2825 or 1–703–905–3591 (not a toll free number) and select option 3 for regulatory questions. Email inquiries can be sent to *FRC@fincen.gov.*

SUPPLEMENTARY INFORMATION:

I. Introduction

The potential misuse of foreign financial accounts to evade domestic criminal, tax, and regulatory laws has been a long-held congressional concern. The House report on the bill leading to the enactment of the BSA described the use of undisclosed foreign financial accounts for a wide range of abuses.[1] More than four decades after the BSA's enactment, foreign financial accounts can still be used for many of the abuses Congress catalogued when it passed the BSA, and transparency with respect to the foreign accounts of U.S. persons continues to aid law enforcement and deter illicit use.

II. Background

A. Statutory and Regulatory Background

The BSA, Titles I and II of Public Law 91–508, as amended, codified at 12 U.S.C. 1829b, 12 U.S.C. 1951–1959, and 31 U.S.C. 5311–5314 and 5316–5332, authorizes the Secretary of the Treasury (''Secretary''), among other things, to issue regulations requiring persons to keep records and file reports that are determined to have a high degree of usefulness in criminal, tax, regulatory, and counter-terrorism matters. The regulations implementing the BSA appear at 31 CFR chapter X. The Secretary's authority to administer the BSA has been delegated to the Director of FinCEN.[2]

Under 31 U.S.C. 5314 the Secretary is authorized to require any ''resident or citizen of the United States or a person in, and doing business in, the United States, to . . . keep records and file reports, when the resident, citizen, or person makes a transaction or maintains a relation for any person with a foreign financial agency.'' The term ''foreign financial agency'' encompasses the activities found in the statutory definition of ''financial agency,''[3] which means, in pertinent part, ''a person acting for a person as a financial institution, bailee, depository trustee, or agent, or acting in a similar way related to money, credit, securities, gold, or a transaction in money, credit, securities, or gold.''[4] The Secretary is also authorized to prescribe exemptions to the reporting requirement and to prescribe other matters the Secretary considers necessary to carry out section 5314.[5]

The regulations implementing 31 U.S.C. 5314 appear at 31 CFR 1010.350, 1010.306, and 1010.420. Section 1010.350 generally requires each U.S. person having a financial interest in, or signature or other authority over, a bank, securities, or other financial account in a foreign country to report such relationship to the Commissioner of Internal Revenue for each year in which such relationship exists, and provide such information as shall be specified in a reporting form prescribed under 31 U.S.C. 5314 to be filed by such persons. Section 1010.306 requires the form to be filed with respect to foreign financial accounts exceeding $10,000 maintained during the previous calendar year. The form must be filed on or before June 30 of each calendar year for accounts maintained during the previous calendar year.[6] The form used to file the report required by section 1010.350 is the Report of Foreign Bank and Financial Accounts—FinCEN Form 114 (''FBAR''), which, since July 1, 2013, must be filed electronically.[7] Section 1010.420 requires records of foreign financial accounts to be maintained for each U.S. person having a financial interest in or signature or other authority over such accounts. The records must be maintained for a period of five years.[8]

The authority to enforce the provisions of 31 U.S.C. 5314 and its implementing regulations has been re-delegated from FinCEN to the Commissioner of Internal Revenue by means of a Memorandum of Agreement between FinCEN and the Internal Revenue Service (''IRS'') dated April 2, 2003.[9] With this delegation, FinCEN conferred upon the IRS the authority to enforce the FBAR provisions of the BSA and its implementing regulations,

[1] The House report states:

Considerable testimony was received by the Committee from the Justice Department, the United States Attorney for the Southern District of New York, the Treasury Department, the Internal Revenue Service, the Securities and Exchange Commission, the Defense Department and the Agency for International Development about serious and widespread use of foreign financial facilities located in secrecy jurisdictions for the purpose of violating American law. H.R. Rep. No 975 91st Cong. 2d Sess. 12 (1970).

[2] Treasury Order 180–01 (Sept. 26, 2002).

[3] 31 U.S.C. 5312(b)(2).

[4] *See* 31 U.S.C. 5312(a)(1), which exempts from the definition of financial agency a person acting for a country, a monetary or financial authority acting as a monetary or financial authority or an international financial institution of which the United States government is a member.

[5] FinCEN is proposing to replace the term exception, as was previously used in the FBAR regulation text, with the term exemption to reflect the language in 31 U.S.C. 5314 more accurately. For that reason, the preamble will refer to signature authority exemptions, as opposed to signature authority exceptions.

[6] In accordance with section 2006(b)(11) of Public Law 114–41 the filing due date for the report will be April 15 effective with the 2016 reporting year. Extensions to October 15 of the reporting year are available upon request.

[7] Formerly Form TD–F 90–22.1. FinCEN Form 114 can be completed by accessing FinCEN's BSA E-Filing System Web site—*http://bsaefiling.fincen.treas.gov/main.html.*

[8] The penalties addressed in the BSA apply to both the FBAR reporting and recordkeeping requirement.

[9] *See* 31 CFR 1010.810(g).

investigate possible violations, and assess and collect civil penalties in connection therewith. The delegation also conferred upon the IRS the authority to: (1) Respond to public inquiries and requests for advice, (2) issue administrative rulings, and (3) provide related assistance to the public with respect to compliance with FBAR requirements. Finally, the delegation conferred upon the IRS the authority to revise the FBAR form and instructions, and to propose to FinCEN revisions of the applicable regulations for the purpose of enhancing FBAR compliance and enforcement.[10]

B. Signature Authority Exemptions Provision

Prior to 2011, FinCEN's FBAR regulation text referred filers to the FBAR form instructions for guidance as to the specific information to be reported on the FBAR. The detailed requirements for reporting were included in the FBAR form instructions previously issued by the IRS and FinCEN. A revised FBAR form, which modified several aspects of the instructions to the form, was issued in October 2008. In the ensuing months, a number of questions and comments were received from the public seeking guidance on compliance with the revised instructions. In response to these questions and comments, FinCEN, in consultation with the IRS, issued a Notice of Proposed Rulemaking revising the reporting rules.[11] The proposal was finalized in 2011 (the ''2011 FBAR regulations'').[12]

As part of the 2011 FBAR regulations, FinCEN included changes to exemptions, which previously appeared only in the instructions to the FBAR form, for certain U.S. persons with signature or other authority over the foreign financial accounts of certain types of federally regulated entities. These changes expanded the exemptions so that they applied to accounts held by more types of federally regulated entities.

As a result, officers and employees of the federally regulated entities (''covered entities'') listed below, are currently exempt from FBAR reporting for their signature authority over the entities' foreign financial accounts if the officer or employee has no financial interest in the foreign account:

- A bank examined by a Federal banking agency;
- a financial institution registered with and examined by the Securities and Exchange Commission (''SEC'') or the Commodity Futures Trading Commission (''CFTC'');
- an Authorized Service Provider with signature authority over a foreign financial account owned or maintained by an investment company registered with the SEC;[13]
- an entity with a class of equity securities listed (or American depository receipts listed) on any U.S. national securities exchange (''listed corporation'') or a U.S. subsidiary if the subsidiary is included in the consolidated report the parent filed;[14] or
- an entity that has a class of equity securities registered (or American depository receipts registered) under section 12(g) of the Securities Exchange Act (''section 12(g) corporation'').[15]

Subsequent to the publication of the 2011 amendments to the FBAR regulation, FinCEN received several questions from industry with respect to the signature authority exemptions. In particular, many filers asked how the exemptions applied with respect to scenarios involving overlapping signature authority.[16] Many filers were unsure of the breadth of the amended exemptions as they applied to scenarios involving over-lapping signature authority. ''Over-lapping'' signature authority occurs when an officer or employee of a *parent* entity also has signature authority over the foreign financial accounts of the parent's controlled *subsidiary* entity and vice versa. Under a literal reading of the regulation, the exemption only applies if the individual is actually ''an officer or employee of'' the particular corporate entity that holds the account, and not to situations in which the individual may have control over accounts held by affiliated corporate or other business entities that do not employ the individual.[17]

[10] Beginning in March 2011, with the implementation of mandatory electronic filing, FinCEN has managed and instituted all changes to the FBAR and related line item and electronic instructions. FinCEN and the IRS collaborate on FBAR actions regardless of the nature of these actions.

[11] *See* 75 FR 8844 (February 26, 2010).

[12] *See* 76 FR 10234 (February 24, 2011).

[13] ''Authorized Service Provider'' means an entity that is registered with and examined by the SEC and that provides services to an investment company registered under the Investment Company Act of 1940. *See* 31 CFR 1010.350(f)(2)(iii).

[14] A U.S. entity that owns directly or indirectly more than a 50-percent interest in one or more entities required to report is permitted to file a consolidated report on behalf of itself and such other entity. *See* 31 CFR 1010.350(g)(3).

[15] Section 12(g) corporations must have more than $10 million in assets and a class of equity security held of record by either 2,000 persons, or 500 persons who are not accredited investors (as defined by the SEC).

[16] FinCEN received letters from six large trade associations and 12 of the largest financial institutions, all raising similar concerns regarding the signature authority exemptions.

[17] As clarified at 31 CFR 1010.350(g)(3), an entity that is a United States person and which owns directly or indirectly more than a 50 percent interest in one or more other entities required to report under this section will be permitted to file a consolidated report on behalf of itself and such other entities. FinCEN considers all entities permitted to be reported together on a consolidated FBAR to be entities within the same corporate or other business structure.

Some filers believed that the pre-2011 exemptions, outlined in the FBAR form instructions, were broader than they actually were, with many filers treating the pre-2011 signature authority exemptions as being applicable to all instances of an officer or employee's over-lapping signature authority within a corporate or other business structure.[18] The 2011 FBAR regulations made it clear that the signature authority exemptions did not apply to all instances of over-lapping signature authority. Following the 2011 FBAR regulations, FinCEN received requests from industry to exempt officers or employees of covered entities and their controlled subsidiaries for instances in which the officers or employees have over-lapping signature authority with respect to foreign financial accounts owned by the employer, as well as foreign financial accounts of the employer's parent and subsidiaries.[19]

FinCEN believes that the exemptions, in practice, may impose greater obligations on filers than necessary given the nature of the reporting.[20] As a result, FinCEN, in consultation with the IRS, has made a policy decision to provide a simplified and expanded exemption.[21] Additionally, FinCEN proposes to use the term ''agent'' to incorporate entities and individuals, such as authorized service providers and their employees, within the scope of the proposed exemption.[22] The proposed exemption would eliminate the requirement for officers, employees, and agents of U.S. entities to report on accounts owned by the entity over which the officer, employee, or agent has signature authority solely due to their employment when those accounts are already required to be reported by their employer, or any other U.S. entity within the same corporate or other business structure as their U.S. employer. This proposed exemption is intended to address instances in which employees have over-lapping signature authority with respect to U.S. parent and subsidiary accounts within the same corporate or other business structure. However, the exemption for employees to report their signature authority over the foreign financial accounts of their employer would not extend to U.S. persons in instances in which no entity within their employer's corporate or other business structure has an obligation to report to FinCEN its financial interest in such accounts. For example, in instances in which a U.S. person is employed by a non-U.S. entity with no obligation to report its foreign financial accounts, and the foreign entity is not included as a subsidiary of a U.S. entity that is filing, the U.S. person would have an obligation to report his or her signature authority over the non-U.S. entity's foreign financial accounts.[23] In this regard the scope of the reporting obligation remains unchanged.

In the past, FinCEN saw value in having these individuals report on the same foreign financial accounts as their employers as a check to ensure that the employers themselves had reported their financial interest in these accounts. It should be noted that in accordance with the 2011 FBAR regulations this dual reporting did not absolve either party from filing an FBAR as required under the regulation, except in those instances in which an officer or employee qualified for the signature authority exemptions. However, FinCEN now believes that such a check on a non-filing employer may be of limited practical value because FinCEN was made aware, particularly during the first required FBAR e-filing season, due by June 30, 2014, that employers often file FBARs on behalf of their employees with signature authority because the employers maintain the account information.[24] This is in keeping with

[18] FinCEN was made aware that many large companies may have one ''treasury group,'' which may be either at the parent corporation level or the controlled subsidiary level where employees have signature authority over the foreign financial accounts of both the parent corporation and its controlled subsidiaries, domestic and foreign.

[19] In response to ongoing questions regarding the scope of the signature authority exemptions, and in order for FinCEN to assess the full extent of the impact of the revised signature authority exemptions, FinCEN, in close coordination with the IRS, issued FinCEN Notices 2011–1 and 2011–2 (collectively, the ''2011 Notices'') on May 31 and June 17, 2011, respectively, to extend to June 30, 2012 the FBAR filing due date for certain individuals affected by the signature authority exemptions. On February 14, 2012, FinCEN further extended the FBAR due date to June 30, 2013 via FinCEN Notice 2012–1, for filers that met the requirements of the original 2011 Notices. On December 26, 2012, FinCEN again extended the FBAR due date to June 30, 2014 via FinCEN Notice 2012–2, for those same filers. Again on December 20, 2013, FinCEN extended the FBAR due date to June 30, 2015 via FinCEN Notice 2013–1, for those same filers. Once more on December 10, 2014, FinCEN extended the FBAR due date to June 30, 2016 via FinCEN Notice 2014–1, for those same filers. Due to the strong possibility of a regulatory change to the signature authority exemptions, the complexity of this issue, along with the need to coordinate with the IRS, FinCEN further extended the FBAR due date to April 15, 2017 via FinCEN Notice 2015–1, dated December 8, 2015, for filers that met the requirements of the previous Notices. *See* FinCEN Notice 2015–1. *https://www.fincen.gov/whatsnew/pdf/20151208.pdf.* Note that the FBAR is a calendar year report ending December 31 of the reportable year. Beginning with the 2016 tax year, the due date for FBAR reporting is April 15 of the year following the December 31 report ending date as changed by section 2006(b)(11) of Public Law 114–41. If requested, this change also provided for a six-month extension of time to file the form (for tax years beginning after 2015).

[20] FinCEN has learned that up to 100 employees may have signature authority over one foreign financial account during a calendar year in order to perform their jobs. In such a scenario under the present rule, FinCEN would receive over 100 FBARs regarding the same foreign financial account information.

[21] This proposed amendment is consistent with Executive Order 13563, ''Improving Regulation and Regulatory Review,'' issued by the President on January 18, 2011. Section 6 of Executive Order 13563 emphasizes the importance of retrospective analysis of rules to determine whether any such regulations should be modified, expanded, streamlined, or repealed so as to make the agency's regulatory program more effective or less burdensome in achieving the regulatory objectives.

[22] Note that the exemption would only apply to ''agents'' who are not owners of record or holders of legal title, as described in 31 CFR 1010.350(e)(1), and that have no financial interest in the foreign financial account over which they have signature authority.

[23] *See* Item Instructions-Part IV of the BSA Electronic Filing Requirements For Report of Foreign Bank and Financial Accounts (FinCEN Form 114) for certain instances of truncated filing as it relates to signature authority over the foreign financial accounts of a foreign located employer. The instructions specifically note the following: ''a United States person who (1) resides outside of the United States, (2) is an officer or employee of an employer who is physically located outside of the United States, and (3) has signature authority over a foreign financial account that is owned or maintained by the individual's employer should only complete Part I and Items 34–43 of Part IV.'' Such U.S. persons are excluded from reporting items 15–23 regarding account information, including the account number, the name of the foreign financial institution that holds the account, the address of the foreign financial institution, the maximum value of the account during the calendar year, and the type of account. *http://www.fincen.gov/forms/files/FBAR%20Line%20Item%20Filing%20Instructions.pdf.*

[24] Due to a number of requests from employers to e-file FBARs on behalf of their employees, on March 28, 2014, FinCEN revised the FBAR E-filing FAQs to clarify the following: FBAR E-Filing FAQs 6—Can an employer submit an FBAR via the BSA E-Filing System on behalf of its employee, who has an obligation to file an FBAR due to their signature authority over the employer's account(s)?

Yes. An employer may assist its employees in the preparation of electronic FBAR forms for BSA E-Filing. Consistent with FinCEN's instructions that provide for approved third-party filing of the FBAR, if an employer has been provided documented authority (Form 114a) by the legally obligated filers (employees with signature authority over the employer's foreign financial account(s)) to sign and submit FBARs on their behalf through the BSA E-Filing System, that employer can do so through a single BSA E-Filing institutional account established on the BSA E-File System for the employer. Form 114a (*http://www.fincen.gov/forms/files/FBARE-FileAuth114aRecordSP.pdf*) should be completed designating the employer as the filer/preparer of the employee's FBAR. A copy of the Form 114a should be retained by the filer/employer and not sent to FinCEN. Employers can establish their institution accounts by accessing the BSA E-Filing System enrollment page (*http://bsaefiling.fincen.treas.gov/Enroll.html*), selecting the Institution option, and following the steps to enroll. If the employee does not provide its employer with the Form 114a the filings must be signed and submitted by the employee. An employee signing and submitting his or her own FBAR may use the BSA E-Filing System by accessing the No Registration FBAR page (*http://bsaefiling.fincen.treas.gov/NoRegFBARFiler.html*). If such authority

the report's instructions prior to the 2011 FBAR regulations with respect to officers and employees of U.S. entities who had signature authority over, but no financial interest in, foreign financial accounts owned by the U.S. employer, which stated that if an employer notified the employee, in writing, that the required FBAR had been filed, the employee was relieved of filing on his or her own behalf.

To maintain transparency with respect to U.S. persons eligible for the exemption for officers, employees, or agents of U.S. entities, employers would be required to maintain information identifying all officers, employees, or agents with signature authority over, but no financial interest in, those same accounts. FinCEN proposes to require that this information be made available to FinCEN upon request and that such records be maintained for a period of 5 years. In instances in which a U.S. parent entity is filing a consolidated FBAR on behalf of itself and its controlled (*i.e.,* greater than 50-percent owned) subsidiaries required to file an FBAR, the U.S. parent entity would be responsible for maintaining information identifying all of its employees and its subsidiaries' employees with signature authority over such foreign financial accounts. In instances in which the U.S. parent entity and its controlled subsidiaries choose to file separate FBARs regarding their respective financial interest in foreign financial accounts, each such entity would be responsible for maintaining information identifying all employees with signature authority over such accounts, regardless of whether the employees are their own employees or are employed by another entity within the same corporate structure.

C. Special Rules Provisions—25 or More Foreign Financial Accounts

While assessing options to address concerns raised by industry regarding the signature authority exemptions, FinCEN determined that the provisions limiting information reported with respect to situations where a filer has 25 or more foreign financial accounts also should be reevaluated. Under the ''special rules'' provisions at 31 CFR 1010.350(g)(1)–(2), when a person or entity has a financial interest in, or signature authority over, 25 or more foreign financial accounts, the filer is required to report the number of accounts and the filer's identifying information (name, address, taxpayer identification number, and for individual filers date of birth).[25] However, these filers are exempted from providing detailed account information on each of their foreign financial accounts. For instance, filers submitting FBARs covered by the special rules are not required to provide the account number, the name of the foreign financial institution that holds the account, the address of the foreign financial institution, the maximum value of the account during the calendar year, or the type of account.

In 2013, approximately 10,800 FBARs were filed by individuals or entities with financial interest in 25 or more foreign financial accounts. Those individuals or entities had a combined total of approximately 5,366,000 foreign financial accounts, which represents approximately 56% of the total number of all foreign financial accounts reported in 2013.[26] As a result, FinCEN and law enforcement did not have detailed account information on any of these accounts because of the exemption for FBAR filers with 25 or more foreign financial accounts.

The FBAR regulations, originally issued in April 1972, 37 FR 6913, and amended in December 1977, 42 FR 63774, *previously* provided:

Each person subject to the jurisdiction of the United States (except a foreign subsidiary of a U.S. person) having a financial interest in, or signature or other authority over, a bank, securities or other financial account in a foreign country shall report such relationship to the Secretary for each year in which such relationship exists, and shall provide such information as shall be specified in a reporting form prescribed by the Secretary to be filed by such persons. Persons having a financial interest in 25 or more foreign financial accounts need only note that fact on the form. Such persons will be required to provide detailed information concerning each account when so requested by the Secretary or his delegate.

The preamble amending the FBAR regulation in 1977 noted the following:

[P]ersons having a financial interest in 25 or more foreign accounts will be required to provide detailed information concerning each account only when so requested by the Secretary or his delegate. This modification in filing procedure is designed to minimize the practical difficulties of reporting a large number of accounts by taxpayers having extensive international interests.

Since the implementation of this provision of the FBAR regulations over 35 years ago, the ease with which individuals can establish overseas accounts has increased and foreign accounts remain vulnerable to exploitation by those seeking to launder money, finance terrorist acts, or engage in other financial crimes. In addition, the implementation of BSA E-filing has made the technological limitations and practical difficulties of reporting the required information less burdensome to industry and individuals.

The provisions limiting information reported with respect to situations where a filer has 25 or more foreign financial accounts has created a significant gap in FinCEN's and law enforcement's ability to analyze a comprehensive set of data on all otherwise reportable foreign financial accounts. A lack of account numbers limits the applicability and efficacy of link analysis that can be done to expand investigations of potential criminal and civil violations of law. Moreover, the enhancement of FinCEN's analytical tools allows it to analyze larger amounts of data more effectively, therefore making account information reported on FBARs that much more accessible. These are just a few examples resulting from the information gap.

For these reasons, FinCEN is proposing to remove the provisions that limit the information reported with respect to situations when a filer has financial interest in, or signature authority over, 25 or more foreign financial accounts. Instead, all U.S. persons will be required to report detailed account information on all foreign financial accounts for which they have a financial interest or signature authority in those instances in which a signature authority exemption does not apply. This will enable FinCEN and law enforcement to receive detailed account information on *all* foreign financial accounts in which a U.S. person has financial interest for the first time since 1977.

III. Section-by-Section Analysis

In an effort to strike the balance of providing FinCEN and law enforcement with the foreign financial account information useful to their investigations, while taking into consideration the burdens upon industry associated with employee-related signature authority reporting, FinCEN is proposing to:

is not provided, the filings must be signed and submitted by the employee. In this case, the employee would be filing as an individual (*See* FAQ 1 above). *http://bsaefiling.fincen.treas.gov/docs/FBAR_EFILING_FAQ.pdf.*

[25] U.S. persons reporting signature authority over 25 or more foreign financial accounts are also required to report the name, address, and taxpayer identification number of the account owner.

[26] In 2013, approximately 4,167,000 foreign financial accounts were reported by filers with less than 25 foreign financial accounts.

• Amend the FBAR regulations by eliminating the requirement for officers, employees, and agents of U.S. entities to report signature authority over entity-owned foreign financial accounts for which they have no financial interest, if those accounts are already required to be reported by their employer or any other entity within the same corporate or other business structure as their employer.[27] Instead, entities/employers would be required to maintain information identifying all officers, employees, or agents with signature authority over those same accounts; this information would be maintained for a period of 5 years and made available to FinCEN upon request.

• Remove the provisions that limit the information required to be reported with respect to situations when a filer has 25 or more foreign financial accounts. As a result, U.S. persons with 25 or more foreign financial accounts would be required to provide the detailed account information that is already being provided by those U.S. persons with fewer than 25 foreign financial accounts.

• Make several other changes including a change to the filing date for FBARs to be filed in 2017 and a revision to reflect the electronic filing of FBARs.

A. Signature Authority Exemption Provision

FinCEN proposes to amend 31 CFR 1010.350(f)(2) by removing the current signature authority exemptions and adding a single, broader signature authority exemption. The current signature authority exemptions at 31 CFR 1010.350(f)(2) apply to the following persons:

• An officer or employee of a bank that is examined by the Office of the Comptroller of the Currency, the Board of Governors of the Federal Reserve System, the Federal Deposit Insurance Corporation, the Office of Thrift Supervision, or the National Credit Union Administration need not report that he has signature or other authority over a foreign financial account owned or maintained by the bank if the officer or employee has no financial interest in the account.

• An officer or employee of a financial institution that is registered with and examined by the Securities and Exchange Commission or Commodity Futures Trading Commission need not report that he has signature or other authority over a foreign financial account owned or maintained by such financial institution if the officer or employee has no financial interest in the account.

• An officer or employee of an Authorized Service Provider need not report that he has signature or other authority over a foreign financial account owned or maintained by an investment company that is registered with the Securities and Exchange Commission if the officer or employee has no financial interest in the account. ''Authorized service provider'' means an entity that is registered with and examined by the Securities and Exchange Commission and that provides services to an investment company registered under the Investment Company Act of 1940.

• An officer or employee of an entity with a class of equity securities listed (or American depository receipts listed) on any United States national securities exchange need not report that he has signature or other authority over a foreign financial account of such entity if the officer or employee has no financial interest in the account. An officer or employee of a United States subsidiary of a United States entity with a class of equity securities listed on a United States national securities exchange need not file a report concerning signature or other authority over a foreign financial account of the subsidiary if he has no financial interest in the account and the United States subsidiary is included in a consolidated report of the parent filed under this section.

• An officer or employee of an entity that has a class of equity securities registered (or American depository receipts in respect of equity securities registered) under section 12(g) of the Securities Exchange Act need not report that he has signature or other authority over the foreign financial accounts of such entity or if he has no financial interest in the accounts.

Under the proposed signature authority exemption an officer, employee, or agent of an entity need not submit a report to FinCEN regarding signature or other authority over a foreign financial account in which such entity, or a subsidiary, parent entity, or other entity within the same corporate or other business structure of such entity has a financial interest, if the officer, employee, or agent has no financial interest in the account and the account is required to be reported under 31 CFR 1010.350 by the entity or any other entity within the same corporate or other business structure.[28] An entity will be required to maintain information identifying all officers, employees, and agents with signature or other authority over a foreign financial account in which it has financial interest and to provide this information when so requested by the Financial Crimes Enforcement Network. Such information regarding officers, employees, and agents shall be identified, and maintained by the entity, and shall be deemed to have been filed with FinCEN Form 114. Such records shall be retained for a period of 5 years.

This exemption would be available to all U.S. persons that currently have a reporting obligation solely due to their signature or other authority over the foreign financial accounts of their employers or any other entities within the same corporate or other business structure as their employers, except in those instances in which the entity that has a financial interest in the foreign financial account over which the officer, employee, or agent has signature authority does not have an obligation to report to FinCEN its financial interest in such accounts. This may be the case in instances in which a U.S. person is employed by a foreign entity and has signature authority over the foreign financial accounts of the foreign entity in which case the foreign entity/employer has no obligation to report its financial interest to FinCEN under the FBAR regulations. If the officer, employee, or agent is eligible for this signature authority exemption, the employer that is required to report the account details of the foreign financial account on an FBAR due to its financial interest in the account would be required to maintain information identifying those officers, employees, or agents with signature or other authority over such account, which would be made available to FinCEN upon request. Such records would be required to be retained for a period of 5 years.[29]

B. Special Rules Provisions—25 or More Foreign Financial Accounts

FinCEN proposes to remove 31 CFR 1010.350(g)(1) and (2). Under those existing provisions, a United States person having a financial interest in 25 or more foreign financial accounts need only provide the number of financial accounts and certain other basic information on the report, but will be required to provide detailed information concerning each account when so requested by the Secretary or his delegate. Similarly, under those existing

[27] *See supra* note 17.

[28] *See supra* note 17.

[29] FinCEN understands that, as part of a final rule, it would need to determine the effect of the provisions of this proposed rule on earlier FBAR deferrals pursuant to FinCEN Notices 2011–1; 2011–2; 2012–1; 2012–2; 2013–1; 2014–1; and 2015–1. *See* IV. Questions for Public Comment.

provisions, a United States person having signature or other authority over 25 or more foreign financial accounts need only provide the number of financial accounts and certain other basic information on the report, but will be required to provide detailed information concerning each account when so requested by the Secretary or his delegate.

Under the proposal, detailed account information on all foreign financial accounts in which a U.S. person has financial interest would be reported for the first time, due to the removal of the special rules.[30] As noted above, in 2013, approximately 10,800 FBARs were filed by individuals or entities with financial interest in 25 or more foreign financial accounts. Those individuals or entities had a financial interest in a combined total of approximately 5,366,000 foreign financial accounts. U.S. persons are already required to maintain and make available upon request detailed account information on all foreign financial accounts in which they have financial interest or signature authority, which may assist in filing the FBARs that the proposed rule would require of U.S. persons with 25 or more foreign financial accounts.[31]

C. Other Proposed Revisions

The revisions to the signature authority exemption provision and the special rules provisions require certain other revisions to the regulation text for the purpose of consistency and order throughout §§ 1010.350, 1010.306, and 1010.420.

Revise § 1010.350(a); § 1010.306(c) and (e); and § 1010.420

Paragraph (a) of § 1010.350 is being revised to strike the last sentence of the paragraph which makes reference to the current special rules regarding persons with 25 or more foreign financial accounts.

Paragraph (a) of § 1010.350 is also being revised to reflect the change in the name of the FBAR form from TD–F 90–22.1 to FinCEN Form 114 and to reflect the reporting, electronically through BSA E-Filing, of the FBAR form to FinCEN as well as the reporting, on a return, to the Commissioner of Internal Revenue. This technical change will also be reflected in §§ 1010.306(c) and (e) and 1010.420. Section 1010.306(c) is being revised to reflect the new FBAR filing due date of April 15, effective with the 2016 reporting year, in accordance with section 2006(b)(11) of Public Law 114–41. In addition, § 1010.306(c) is being revised to reflect that extensions to October 15 of the reporting year are available upon request, also in accordance with section 2006(b)(11) of Public Law 114–41. Section 1010.420 is also being revised to include a few other minor changes.

Re-Designate Paragraphs (g)(3) Through (5) of § 1010.350 as Paragraphs (g)(1) Through (3)

Because § 1010.350(g)(1) and (2) special rules regarding reporting on 25 or more foreign financial accounts are being removed, the remainder of the special rules designated as paragraph (g)(3) Consolidated reports; paragraph (g)(4) Participants and beneficiaries in certain retirement plans; and paragraphs (g)(5) Certain trust beneficiaries are being re-designated as paragraphs (g)(1) through (3).

D. Revisions to FinCEN Form 114

If the proposed rule is finalized, consistent with the proposed removal of special rules provisions regarding 25 or more foreign financial accounts, FinCEN would remove FinCEN Form 114 data field 14a (Does the filer have a financial interest in 25 or more financial accounts?); and data field 14b (Does the filer have signature authority over, but no financial interest in, 25 or more foreign financial accounts?). No other FinCEN Form 114 data fields would need to be amended as a result of the proposed revisions to the FBAR regulations. While no other data fields will be changed, several existing data fields in each section will be designated as ''critical'' requiring completion for the FBAR to be accepted by BSA E-Filing. The batch filing electronic filing specifications will also require updating to the same standard. Upon finalizing the revisions to the FBAR as proposed in this NPRM, FinCEN would also amend the FinCEN Form 114 instructions consistent with the revisions to the FBAR regulations.[32]

IV. Questions for Public Comment

A. FinCEN requests comment on whether expanding the signature authority exemption provision as proposed will reduce burden, and if so, by how much.

B. FinCEN requests comment on whether it should allow entities and individuals to rely upon the provisions of this proposed rule, if finalized, with regard to FBAR filings properly deferred pursuant to FinCEN Notices 2011–1; 2011–2; 2012–1; 2012–2; 2013–1; 2014–1; and 2015–1.

C. FinCEN requests comment on whether removing the special rules provisions regarding reporting on 25 or more foreign financial accounts will increase burden on impacted entities and individuals, and if so, by how much. Specifically, will technological costs be incurred to implement systems to transfer account information to the BSA E-filing system for FBAR reporting?

D. If technological modifications are necessary to report 25 or more foreign financial accounts, FinCEN requests comment on the estimated timeframe to implement those modifications.

E. FinCEN requests comment on whether the amendments in this proposed rule regarding broadening signature authority exemptions combined with the removal of the special rules regarding 25 or more foreign financial accounts will increase or decrease burden on those entities and individuals impacted by both amendments to the FBAR regulation, and if so, by how much.

V. Regulatory Flexibility Act

Pursuant to the Regulatory Flexibility Act (5 U.S.C. 601 *et seq.*), FinCEN certifies that these proposed regulation revisions will not have a significant economic impact on a substantial number of small entities. The proposed rule applies to U.S. persons, a term which includes entities of all sizes and individuals, if they have reportable accounts under this rule. However, we expect that small entities will be less likely to have reportable foreign financial accounts or to have many such accounts, unlike larger entities, which likely have a broader base of business operations. In addition, we expect a reduction in burden for individuals, because FinCEN is exempting all individuals that currently have a reporting obligation solely due to their signature authority over the foreign financial accounts of their employers or any other entities within the same corporate or other business structure as their employers, except in those instances in which no such entity has an obligation to report to FinCEN its financial interest in such accounts.

With regard to the proposed amendment to remove the provisions that limit the information required to be reported with respect to situations when a filer has 25 or more foreign financial accounts, FinCEN expects that most U.S. persons reporting on 25 or more foreign financial accounts will be large

[30] As discussed above, detailed account information includes: the account number, the name of the foreign financial institution that holds the account, the address of the foreign financial institution, the maximum value of the account during the calendar year, and the type of account.

[31] *See* 31 CFR 1010.420.

[32] FinCEN Form 114 instructions—*http://www.fincen.gov/forms/files/FBAR%20Line%20Item%20Filing%20Instructions.pdf.*

entities. U.S. persons with 25 or more foreign financial accounts reportable on the FBAR will be required to provide the same account information currently required to be provided by U.S. persons with less than 25 foreign financial accounts. The information required to be reported on the FBAR is basic information U.S. persons will have received on account statements from the foreign financial institutions at which the accounts are opened and maintained. Those statements will provide a U.S. person with the information about an account needed to file the FBAR. No special accounting or legal skills would be necessary to transfer the basic information required to be reported, such as the name of the foreign financial institution, the type of account, and the account number, to the FBAR. FinCEN requests comment on the accuracy of the statement that the regulations in this document will not have a significant economic impact on a substantial number of small entities.

VI. Executive Order 13563 and 12866

Executive Orders 13563 and 12866 direct agencies to assess costs and benefits of available regulatory alternatives and, if regulation is necessary, to select regulatory approaches that maximize net benefits (including potential economic, environmental, public health and safety effects, distributive impacts, and equity). Executive Order 13563 emphasizes the importance of quantifying both costs and benefits, of reducing costs, of harmonizing rules, and of promoting flexibility. This rule has been designated a ''significant regulatory action'' although not economically significant, under section 3(f) of Executive Order 12866. Accordingly, the rule has been reviewed by the Office of Management and Budget.

VII. Paperwork Reduction Act (''PRA'') Notices

The reporting requirements contained in this proposed rule (31 CFR 1010.350) are being submitted to the Office of Management and Budget for review in accordance with the Paperwork Reduction Act of 1995 (44 U.S.C. 3507(d)). Comments concerning the estimated burden and other questions should be sent to the Desk Officer for the Department of the Treasury, Office of Information and Regulatory Affairs, Office of Management and Budget, Paperwork Reduction Project (1506), Washington, DC 20503 with a copy to FinCEN by mail, or comments may be submitted by email to *oira_submission@omb.eop.gov.* Please submit comments by one method only. Comments are welcome and must be received by May 9, 2016. In accordance with requirements of the Paperwork Reduction Act of 1995, 44 U.S.C. 3506(c)(2)(A), and its implementing regulations, 5 CFR part 1320, the following information concerning the collection of information of the *Amendment to the Bank Secrecy Act Regulations—Reports of Foreign Financial Accounts* is presented to assist those persons wishing to comment on the information collection.

Signature Authority Exemption Provision

The proposed rulemaking seeks to expand and clarify the exemption to the signature authority reporting requirement. By making the signature authority exemption broader and clearer there is potential for a reduction in signature authority reporting by individuals with signature authority over, but no financial interest in, foreign financial accounts.

The proposed rulemaking also seeks to clarify that entities/employers would be required to maintain information identifying all officers and employees with signature authority over the foreign financial accounts in which the entities/employers have financial interest; this information would be retained for a period of 5 years and be made available to FinCEN upon request. FinCEN expects there will be little to no effect on burden as a result of this recordkeeping requirement since these entities/employers, in all likelihood, maintain this information in the normal course of business.

Description of Affected Filers: Individuals/agents with signature authority over, but no financial interest in, foreign financial accounts reportable by the individual/agent under 31 CFR 1010.350 solely due to their employment.

Estimate Number of Affected Filing Individuals: 5,660. Approximately 11,600 FBARs were filed by U.S. persons in 2013 solely due to reporting on signature authority, but no financial interest. Of those FBARs, approximately 280 were filed by a U.S. person who was reporting signature authority over the foreign financial account of an account owner with a foreign address. As a result of questions raised by industry, we estimate that at least 50 percent of the remaining FBARs (11,600 − 280 = 11,320) were filed by individuals with signature authority over, but no financial interest in, a foreign financial account, solely due to their employment.[33]

Estimate Average Annual Burden Hours Reduction Per Affected Filer: The estimated average burden reduction associated with the reporting requirement in this rule will vary depending on the number of reportable accounts. Based on past filings, we estimate that the average reporting burden will range from approximately twenty minutes to one hour and that the average reporting burden will be approximately 45 minutes. The reporting burden is reflected in the burden listed for completing FinCEN Form 114 (See OMB Control Number 1506–0009).

Estimated Total Annual Burden Reduction: 4,245 hours.[34]

Removal of Special Rules Provisions—25 or More Foreign Financial Accounts

The proposed rulemaking also seeks to remove the special rules permitting limited account information to be reported on the FBAR when a person has financial interest in or signature authority over 25 or more foreign financial accounts. There should not be a net increase in the number of FBARs filed, although there will be a net increase in the time it takes to file an FBAR when reporting 25 or more accounts. However, individuals are already required to maintain records regarding account information for such foreign financial accounts under the rule, therefore there will be no impact on the recordkeeping requirement, and these records can be leveraged to obtain the information necessary to report.

Description of Affected Filers: Individuals and entities that maintain 25 or more foreign financial accounts reportable under 31 CFR 1010.350.

Estimate Number of Affected Filing Individuals and Entities: 12,580.[35]

[33] FinCEN is excluding FBARs filed by a U.S. person who was reporting signature authority over the foreign financial account of an account owner with a foreign address because such scenarios likely include individuals reporting signature authority solely due to their employment with a foreign parent corporation. In such a scenario, the proposed signature authority exemption would not apply because a foreign parent corporation does not have a requirement to report its financial interest in a foreign financial account on the FBAR.

[34] 5,660 filers multiplied by 45 minutes and converted to hours is 4,245 hours.

[35] This figure represents the actual number of FBARs filed in calendar year 2013 when 25 or more foreign financial accounts were reported. 10,800 FBARs were filed by U.S. persons reporting financial interest in 25 or more foreign financial accounts. 8,900 FBARs were filed by U.S. persons reporting signature authority over 25 or more foreign financial accounts. FinCEN estimates that at least 80 percent of these FBARs were filed by individuals with signature authority over, but no financial interest in, a foreign financial account,

Estimate Average Annual Burden Hours Per Affected Filer: The estimated average burden associated with the reporting requirement (FBAR form completion) will vary depending on the number of reportable accounts. FinCEN estimates that the average increase in the reporting burden will be approximately 2 minutes per foreign financial account reported on the FBAR. In 2013, approximately 10,800 FBARs were filed by individuals or entities with financial interest in 25 or more foreign financial accounts. Those entities had a combined total of approximately 5,366,000 foreign financial accounts. The average number of foreign financial accounts reported per FBAR filed was 497. This translates to approximately 16.6 burden hours per affected filer.[36] The reporting burden is reflected in the burden listed for completing FinCEN Form 114 (See OMB Control Number 1506–0009).

Estimated Total Annual Burden: 208,828 hours (12,580 FBARs × 16.6 hours per FBAR filer).

Summary Total of Estimated Annual Burden: 204,583 hours (208,828 − 4,245).

Questions for Comment

FinCEN specifically invites comment on the accuracy of FinCEN's estimate of the burden on respondents and any other aspects of our PRA estimates. Comments are specifically requested concerning: (a) Whether the proposed collection of information is necessary for the proper performance of the functions of FinCEN, including whether the information will have practical utility; (b) the accuracy of the estimated burden associated with the proposed collection of information; (c) how the quality, utility, and clarity of the information to be collected may be enhanced; and (d) how the burden of complying with the proposed collection of information may be minimized, including through the application of automated collection techniques or other forms of information technology.

VIII. Unfunded Mandates Act of 1995 Statement

Section 202 of the Unfunded Mandates Reform Act of 1995 (''Unfunded Mandates Act''), Public Law 104–4 (March 22, 1995), requires that an agency prepare a budgetary impact statement before promulgating a rule that may result in expenditure by state, local, and tribal governments, in the aggregate, or by the private sector, of $100 million or more in any one year. If a budgetary impact statement is required, section 202 of the Unfunded Mandates Act also requires an agency to identify and consider a reasonable number of regulatory alternatives before promulgating a rule. FinCEN has determined that it is not required to prepare a written statement under section 202 and has concluded that on balance the proposals in the Notice of Proposed Rulemaking provide the most cost-effective and least burdensome alternative to achieve the objectives of the rule.

List of Subjects in 31 CFR Part 1010

Administrative practice and procedure, Banks, Banking, Brokers, Currency, Foreign banking, Foreign currencies, Gambling, Investigations, Penalties, Reporting and recordkeeping requirements, Securities, Terrorism.

Proposed Amendments to the Regulations

For the reasons set forth above in the preamble, 31 CFR part 1010 is proposed to be amended as follows:

PART 1010—GENERAL PROVISIONS

■ 1. The authority citation for part 1010 continues to read as follows:

Authority: 12 U.S.C. 1829b and 1951–1959; 31 U.S.C. 5311–5314 and 5316–5332; title III, sec. 314, Pub. L. 107–56, 115 Stat. 307; sec. 2006, Pub. L. 114–41, 129 Stat. 457.

■ 2. Amend § 1010.306 by revising paragraphs (c) and (e) to read as follows:

§ 1010.306 Filing of reports.

* * * * *

(c) Reports required by § 1010.350 are to be filed electronically through BSA E-File with the Financial Crimes Enforcement Network and shall be filed on or before April 15 of each calendar year with respect to foreign financial accounts that had an aggregate value in excess of $10,000 at any time during the previous calendar year. Extensions to October 15 of the reporting year are available upon request.

* * * * *

(e) Forms to be used in making the reports required by § 1010.311, § 1010.313, § 1010.350, § 1020.315, § 1021.311, or § 1021.313 of this chapter may be obtained from the Financial Crimes Enforcement Network BSA E-Filing system. Forms to be used in making the reports required by § 1010.340 may be obtained from the U.S. Customs and Border Protection or the Financial Crimes Enforcement Network.

■ 3. Amend § 1010.350 as follows:

■ a. Revise paragraphs (a) and (f)(2);

■ b. Remove paragraphs (g)(1) and (2); and

■ c. Redesignate paragraphs (g)(3) through (5) as paragraphs (g)(1) through (3).

The revisions read as follows:

§ 1010.350 Reports of foreign financial accounts.

(a) *In general.* Each United States person having a financial interest in, or signature or other authority over, a bank, securities, or other financial account in a foreign country shall report such relationship to the Commissioner of Internal Revenue on a return for each year in which such relationship exists and shall provide the Financial Crimes Enforcement Network, through BSA E-Filing, with such information as shall be specified in a reporting form prescribed under 31 U.S.C. 5314 to be filed by such persons. The form prescribed under section 5314 is the Report of Foreign Bank and Financial Accounts (FinCEN Form 114).

* * * * *

(f) * * *

(2) *Exemption.* An officer, employee, or agent of an entity need not submit a report to the Financial Crimes Enforcement Network regarding signature or other authority over a foreign financial account in which such entity, or a subsidiary, parent, or another entity within the same corporate or other business structure of such entity has a financial interest, if the officer, employee, or agent has no financial interest in the account and the account is required to be reported under 31 CFR 1010.350 by the entity or any other entity within the same corporate or other business structure. An entity will be required to maintain information identifying all officers, employees, and agents with signature or other authority over a foreign financial account in which it has financial interest and to provide this information when so requested by the Financial Crimes Enforcement Network. Such information

solely due to their employment. Based on questions raised by industry following the issuance of the 2011 FBAR final rule, FinCEN believes that most FBAR reporting on signature authority over 25 or more foreign financial accounts is by individuals who are reporting solely due to their signature authority over their employers' foreign financial accounts. Because FinCEN is proposing to exempt all of those FBAR filers due to such scenarios, so long as those accounts are already required to be reported by their employer or another entity with the same corporate structure as their employer, we have factored that into our estimate of the number of FBARs we expect to be filed by U.S. persons with 25 or more foreign financial accounts due to signature authority. (8,900 FBARs × 0.2 = 1,780). The estimated total FBARs to be reported with 25 or more foreign financial accounts due to financial interest and signature authority is 12,580 (10,800 + 1,780).

[36] 497 accounts multiplied by 2 minutes per account and converted to hours is 16.6 hours.

regarding officers, employees, and agents shall be identified, and maintained by the entity, and shall be deemed to have been filed with FinCEN Form 114. Such records shall be retained for a period of 5 years.

* * * * *

■ 4. Revise § 1010.420 to read as follows:

§ 1010.420 Records to be made and retained by persons having financial interests in foreign financial accounts.

Records of accounts required by § 1010.350 to be reported to the Financial Crimes Enforcement Network and the Commissioner of Internal Revenue shall be retained by each person having a financial interest in or signature or other authority over any such account. Such records shall contain the name in which each such account is maintained, the number or other designation of such account, the name and address of the foreign financial institution, or other foreign person engaged in the business of a financial institution, with whom such account is maintained, the type of such account, and the maximum value of each such account during the reporting period. Such records shall be retained for a period of 5 years and shall be kept at all times available for inspection as authorized by law. In the computation of the period of 5 years, there shall be disregarded any period beginning with a date on which the taxpayer is indicted or information instituted on account of a willful attempt to evade or defeat Federal income tax, the filing of a false or fraudulent Federal income tax return, or failing to file a Federal income tax return, and ending with the date on which final disposition is made of the criminal proceeding.

Jennifer Shasky Calvery,

Director, Financial Crimes Enforcement Network.

Note: The following appendix will not appear in the Code of Federal Regulations.

Appendix

The following changes to the current Report of Foreign Bank and Financial Account(s) (FBAR), FinCEN 114, report are required in order to implement the proposed changes outlined in the above Notice of Proposed Rule Making (NPRM). Comments to the proposed changes are welcome. Please identify them separately from comments regarding the NPRM.

Part I. a. Filer Information; Add item 2g Primary Federal Regulator (this will be a dropdown box containing a list of primary Federal Regulators). This item is required when item 2e ''Fiduciary or other—Enter type'' is completed.

b. Remove items 14a and 14a. These items are no longer required.

Part II. No changes are required.

Part III. a. Change current item 26 to reflect two checkboxes to indicate ''Individual'' or ''Entity'' that applies to the information entered in item 26a.

b. Rename the current item 26 to 26a ''Last name or organization name of principal joint owner.

Part IV. a. Change current item 34 to reflect two checkboxes to indicate ''Individual'' or ''Entity'' that applies to the information entered in item 26a.

b. Rename the current item 34 to 34a ''Last name or organization name of account owner.

Part V. No changes are required.

[FR Doc. 2016–04880 Filed 3–9–16; 8:45 am]

BILLING CODE 4810–02–P

DEPARTMENT OF EDUCATION

34 CFR Chapter VI

[Docket ID ED–2015–OPE–0134]

Proposed Priorities and Definitions—Fulbright-Hays Group Projects Abroad Program—Short-Term Projects and Long-Term Projects

CFDA Numbers: 84.021A and 84.021B.

AGENCY: Office of Postsecondary Education, Department of Education.

ACTION: Proposed priorities and definitions.

SUMMARY: The Assistant Secretary for Postsecondary Education proposes priorities and definitions under the Fulbright-Hays Group Projects Abroad (Fulbright-Hays GPA) Program. The Assistant Secretary may use these priorities and definitions for competitions in fiscal year (FY) 2016 and later years. We take this action to focus Federal financial assistance on an identified national need. We intend the priorities to address a gap in the types of institutions, faculty, and students that have historically benefitted from international education opportunities.

DATES: We must receive your comments on or before April 11, 2016.

ADDRESSES: Submit your comments through the Federal eRulemaking Portal or via postal mail, commercial delivery, or hand delivery. We will not accept comments submitted by fax or by email or those submitted after the comment period. To ensure that we do not receive duplicate copies, please submit your comments only once. In addition, please include the Docket ID at the top of your comments.

- *Federal eRulemaking Portal:* Go to *www.regulations.gov* to submit your comments electronically. Information on using Regulations.gov, including instructions for accessing agency documents, submitting comments, and viewing the docket, is available on the site under the ''Help'' tab.
- *Postal Mail, Commercial Delivery, or Hand Delivery:* If you mail or deliver your comments about these proposed regulations, address them to Reha Mallory, Office of Postsecondary Education, U.S. Department of Education, 400 Maryland Avenue SW., Room 3E213, Washington, DC 20202.

Privacy Note: The Department's policy is to make all comments received from members of the public available for public viewing in their entirety on the Federal eRulemaking Portal at *www.regulations.gov.* Therefore, commenters should be careful to include in their comments only information that they wish to make publicly available.

FOR FURTHER INFORMATION CONTACT: Reha Mallory. Telephone: (202) 453–7502 or by email: *reha.mallory@ed.gov*.

If you use a telecommunications device for the deaf or a text telephone, call the Federal Relay Service, toll free, at 1–800–877–8339.

SUPPLEMENTARY INFORMATION:

Invitation to Comment:

We invite you to submit comments regarding this notice. To ensure that your comments have maximum effect in developing the notice of final priorities and definitions, we urge you to identify clearly the specific proposed priority or definition that each comment addresses.

We invite you to assist us in complying with the specific requirements of Executive Orders 12866 and 13563 and their overall requirement of reducing regulatory burden that might result from these proposed priorities and definitions. Please let us know of any further ways we could reduce potential costs or increase potential benefits while preserving the effective and efficient administration of the program.

During and after the comment period, you may inspect all public comments about this notice by accessing Regulations.gov. You may also inspect the comments in room 3E203, 400 Maryland Avenue SW., Washington, DC 20202, between the hours of 8:30 a.m. and 4:00 p.m., Washington, DC time, Monday through Friday of each week except Federal holidays. Please contact the person listed under **FOR FURTHER INFORMATION CONTACT**.

Assistance to Individuals with Disabilities in Reviewing the Rulemaking Record: On request we will provide an appropriate accommodation or auxiliary aid to an individual with a disability who needs assistance to

review the comments or other documents in the public rulemaking record for this notice. If you want to schedule an appointment for this type of accommodation or auxiliary aid, please contact the person listed under **FOR FURTHER INFORMATION CONTACT.**

Purpose of Program: The Fulbright-Hays GPA Program supports short-term and long-term overseas projects in training, research, and curriculum development in modern foreign languages and area studies for groups of teachers, undergraduate and graduate students, and faculty engaged in a common endeavor. Fulbright-Hays GPA short-term projects (GPA short-term projects) may include seminars, curriculum development, or group research or study. Fulbright-Hays GPA long-term projects (GPA long-term projects) support advanced overseas intensive programs that focus on the humanities, social sciences, or languages.

Program Authority: 22 U.S.C. 2452(b)(6).

Applicable Program Regulations: 34 CFR parts 662 and 664.

PROPOSED PRIORITIES:

This notice contains two proposed priorities, one for GPA short-term projects and one for GPA long-term projects.

Background:

The U.S. Department of Education administers the Fulbright-Hays GPA Program under the authority of section 102(b)(6) of the Mutual Educational and Cultural Exchange Act of 1961 (Fulbright-Hays Act), 22 U.S.C. 2452(b)(6). The J. William Fulbright Foreign Scholarship Board, which is presidentially appointed, sets policies and procedures for administering the program and exercises final approval over the selection of grantees and fellows for GPA short-term projects and GPA long-term projects.

The objective of the Fulbright-Hays GPA Program is the promotion, improvement, and development of modern foreign languages and area studies at varying levels of education. To help achieve this objective, the program provides opportunities for faculty, teachers, and undergraduate and graduate students to conduct individual and group projects overseas to carry out research and study in the fields of modern foreign languages and area studies.

There are three types of GPA short-term projects: (1) Short-term seminar projects of four to six weeks in length designed to increase the linguistic or cultural competency of U.S. students and educators by focusing on a particular aspect of area study, such as the culture of an area or country of study (34 CFR 664.11); (2) curriculum development projects of four to eight weeks in length that provide participants an opportunity to acquire resource materials for curriculum development in modern foreign language and area studies for use and dissemination in the United States (34 CFR 664.12); and (3) group research or study projects of three to twelve months in duration designed to give participants the opportunity to undertake research or study in a foreign country (34 CFR 664.13).

GPA long-term projects are advanced overseas intensive language projects ranging in duration from eight weeks to four years. GPA long-term projects are designed to take advantage of the opportunities present in the foreign country that are not present in the United States when providing intensive advanced foreign language training (34 CFR 664.14).

The Department's International Strategy for FY 2012–16, ''Succeeding Globally Through International Education and Engagement,'' available at *http://www2.ed.gov/about/inits/ed/internationaled/international-strategy-2012-16.html* (U.S. Department of Education, 2012), reflects our commitment to preparing students for a more globalized world, and to engaging with the international community in order to improve education. The International Strategy's first objective is to ''increase the global competencies of all U.S. students, including those from traditionally disadvantaged groups.'' (U.S. Department of Education, 2012, p.5). Minority-Serving Institutions (MSIs) and community colleges are heavily populated by students from traditionally disadvantaged groups. Twenty-five percent or more of all high school graduates of color, who often are first-generation college attendees, enroll in community colleges as a way to begin their foray into higher education (Edsource, 2008). Research data indicate that minority students are less likely to have access to, or consider, academic programs that provide the requisite training for careers in international service, including study abroad and area studies (Tillman, 2010). Among the barriers preventing these students from pursuing international studies are a lack of exposure to international opportunities and a lack of access to information, including information about international careers (Belyavina and Bhandari, 2011). In addition, traditionally disadvantaged students often have the idea that study abroad is not for them and is a privilege for rich students (Martinez, Ranjeet, and Marx, 2009).

Accordingly, the proposed priority for GPA short-term projects is intended to increase the number of applications from MSIs, community colleges, and new applicant institutions to provide access to life-changing opportunities that will prepare traditionally disadvantaged students for today's global economy. The proposed priority is designed to increase the number and types of students that benefit from these projects. By increasing applications from MSIs and community colleges, we expect these projects to benefit greater numbers of traditionally disadvantaged students.

To further support the Department's objective of increasing the global competencies of all U.S. students, the proposed priority would expand the reach of the GPA short-term and long-term overseas projects by encouraging applications from new applicant institutions—that is, institutions or entities that have not previously been awarded either a GPA short-term or long-term project grant. Over the years, the Fulbright-Hays GPA Program has received applications from the same pool of applicants. This priority is an attempt to encourage applications from institutions that have not been awarded a GPA grant.

The proposed priority for GPA short-term projects is intended to promote applications from State educational agencies (SEAs) in order to increase international learning opportunities for teachers and administrators from the corresponding State, who would work together on a research or curriculum development project that would benefit greater numbers of K–12 students. Historically, only a small number of SEAs have applied for GPA grants.

Furthermore, while existing programs provide some individual educators with opportunities for foreign language learning, study abroad, and other international studies, there are few systemic opportunities for groups of K–12 educators and administrators from a State or local district to work together on a research or curriculum development project intended to build global competencies in their students.

The proposed priority for GPA long-term projects is designed to increase the number of MSIs that become grantees under these projects, in order to increase their students' access to academic coursework, instructional activities, and training that would better prepare them for the 21st-century global economy, careers in international service, and for lifelong engagement

with the diverse communities in which they live, whether at home or abroad.

Proposed Priorities:

Proposed Priority 1—Applications for GPA Short-term Projects from Selected Institutions and Organizations.

Applications for GPA short-term projects from the following types of institutions and organizations:

- Minority-Serving Institutions (MSIs)
- Community colleges
- New applicants
- State educational agencies (SEAs)

Proposed Priority 2—Applications for GPA Long-term Projects from Minority-Serving Institutions (MSIs).

Applications for GPA long-term advanced overseas intensive language training projects from MSIs.

Types of Priorities:

When inviting applications for a competition using one or more priorities, we designate the type of each priority as absolute, competitive preference, or invitational through a notice in the **Federal Register**. The effect of each type of priority follows:

Absolute priority: Under an absolute priority, we consider only applications that meet the priority (34 CFR 75.105(c)(3)).

Competitive preference priority: Under a competitive preference priority, we give competitive preference to an application by (1) awarding additional points, depending on the extent to which the application meets the priority (34 CFR 75.105(c)(2)(i)); or (2) selecting an application that meets the priority over an application of comparable merit that does not meet the priority (34 CFR 75.105(c)(2)(ii)).

Invitational priority: Under an invitational priority, we are particularly interested in applications that meet the priority. However, we do not give an application that meets the priority a preference over other applications (34 CFR 5.105(c)(1)).

PROPOSED DEFINITIONS: The Assistant Secretary proposes the following definitions for this program. We may apply one or more of these definitions in any year in which this program is in effect.

Background: We propose the following definitions to provide clarity for applicants addressing the proposed priorities. The proposed definitions for ''community colleges,'' ''MSIs,'' and ''SEAs'' are from section 312(f) of the Higher Education Act of 1965, as amended (HEA); sections 316 through 320 of part A of title III of the HEA; and 34 CFR 77.1, respectively. These proposed definitions will provide consistency across Department programs and will be familiar to applicants. For purposes of Proposed Priority 1, the proposed definition for ''new applicant'' is similar to the definition used in previous years and is designed to expand the reach of the GPA short-term projects to include institutions and entities that have not previously received a GPA grant.

Definitions:

Community college means an institution that meets the definition in section 312(f) of the HEA (20 U.S.C. 1058(f)); or an institution of higher education (as defined in section 101 of the HEA (20 U.S.C. 1001)) that awards degrees and certificates, more than 50 percent of which are not bachelor's degrees (or an equivalent).

Minority-serving institution (MSI) means an institution that is eligible to receive assistance under sections 316 through 320 of part A of title III, under part B of title III, or under title V of the HEA.

New applicant means any applicant that has not received a discretionary grant from the Department of Education under the Fulbright-Hays Act prior to the deadline date for applications under this program.

State educational agency (SEA) means the State board of education or other agency or officer primarily responsible for the supervision of public elementary and secondary schools in a State. In the absence of this officer or agency, it is an officer or agency designated by the Governor or State law.

Final Priorities and Definitions:

We will announce the final priorities and definitions in a notice in the **Federal Register**. We will determine the final priorities and definitions after considering responses to this notice and other information available to the Department. This notice does not preclude us from proposing additional priorities, requirements, definitions, or selection criteria, subject to meeting applicable rulemaking requirements.

Note: This notice does *not* solicit applications. In any year in which we choose to use one or more of these priorities and definitions, we invite applications through a notice in the **Federal Register**.

Executive Orders 12866 and 13563

Regulatory Impact Analysis

Under Executive Order 12866, the Secretary must determine whether this proposed regulatory action is ''significant'' and, therefore, subject to the requirements of the Executive order and subject to review by the Office of Management and Budget (OMB). Section 3(f) of Executive Order 12866 defines a ''significant regulatory action'' as an action likely to result in a rule that may—

(1) Have an annual effect on the economy of $100 million or more, or adversely affect a sector of the economy, productivity, competition, jobs, the environment, public health or safety, or State, local, or tribal governments or communities in a material way (also referred to as an ''economically significant'' rule);

(2) Create serious inconsistency or otherwise interfere with an action taken or planned by another agency;

(3) Materially alter the budgetary impacts of entitlement grants, user fees, or loan programs or the rights and obligations of recipients thereof; or

(4) Raise novel legal or policy issues arising out of legal mandates, the President's priorities, or the principles stated in the Executive order.

This proposed regulatory action is not a significant regulatory action subject to review by OMB under section 3(f) of Executive Order 12866.

We have also reviewed this proposed regulatory action under Executive Order 13563, which supplements and explicitly reaffirms the principles, structures, and definitions governing regulatory review established in Executive Order 12866. To the extent permitted by law, Executive Order 13563 requires that an agency—

(1) Propose or adopt regulations only upon a reasoned determination that their benefits justify their costs (recognizing that some benefits and costs are difficult to quantify);

(2) Tailor its regulations to impose the least burden on society, consistent with obtaining regulatory objectives and taking into account—among other things and to the extent practicable—the costs of cumulative regulations;

(3) In choosing among alternative regulatory approaches, select those approaches that maximize net benefits (including potential economic, environmental, public health and safety, and other advantages; distributive impacts; and equity);

(4) To the extent feasible, specify performance objectives, rather than the behavior or manner of compliance a regulated entity must adopt; and

(5) Identify and assess available alternatives to direct regulation, including economic incentives—such as user fees or marketable permits—to encourage the desired behavior, or provide information that enables the public to make choices.

Executive Order 13563 also requires an agency ''to use the best available techniques to quantify anticipated present and future benefits and costs as accurately as possible.'' The Office of

Information and Regulatory Affairs of OMB has emphasized that these techniques may include ''identifying changing future compliance costs that might result from technological innovation or anticipated behavioral changes.''

We are issuing these proposed priorities and definitions only on a reasoned determination that their benefits would justify their costs. In choosing among alternative regulatory approaches, we selected those approaches that would maximize net benefits. Based on the analysis that follows, the Department believes that this regulatory action is consistent with the principles in Executive Order 13563.

We also have determined that this regulatory action would not unduly interfere with State, local, and tribal governments in the exercise of their governmental functions.

In accordance with both Executive orders, the Department has assessed the potential costs and benefits, both quantitative and qualitative, of this regulatory action. The potential costs are those resulting from statutory requirements and those we have determined as necessary for administering the Department's programs and activities.

Paperwork Reduction Act of 1995

As part of its continuing effort to reduce paperwork and respondent burden, the Department provides the general public and Federal agencies with an opportunity to comment on proposed and continuing collections of information in accordance with the Paperwork Reduction Act of 1995 (PRA) (44 U.S.C. 3506(c)(2)(A)). This helps ensure that: the public understands the Department's collection instructions, respondents can provide the requested data in the desired format, reporting burden (time and financial resources) is minimized, collection instruments are clearly understood, and the Department can properly assess the impact of collection requirements on respondents.

The application package associated with Proposed Priority 1—Applications for GPA Short-term Projects from Selected Institutions and Organizations—was previously approved by the Office of Management and Budget (OMB) under OMB control number 1840–0792. Proposed Priority 1 and the proposed definitions will not change the currently approved application package, or the approved burden for the application package associated with the short-term projects. However, the application package associated with Proposed Priority 2—Applications for GPA Long-term Projects from Minority-Serving Institutions (MSIs)—does not have a current OMB control number, and therefore, it will require OMB approval under 1840–xxxx. As required by the PRA, the Department is submitting to OMB, under OMB control number 1840–xxxx, an information collection clearance concurrently with the publication of this notice of proposed priorities and definition for long-term projects under CFDA number 84.021B.

We estimate that each applicant would spend approximately 100 hours of staff time to address the proposed priorities and definitions, prepare the application, and obtain necessary clearances. The total number of hours for all applicants will vary based on the number of applications. Based on the number of applications the Department received in response to the February 23, 2012 notice inviting applications, we expect to receive approximately 150 applications. We expect each applicant to require 100 hours to complete a GPA long-term project application. Accordingly, the total number of hours for all expected applicants is an estimated 15,000 hours. We estimate the total cost per hour of the staff who carry out this work to be $80.00 per hour. The total estimated cost for all applicants would be $1,200,000.00.

We have prepared an Information Collection Request (ICR) for this collection (1840–XXXX). If you want to review and comment on the ICR, please follow the instructions in the **ADDRESSES** section of this notice.

Note: The Office of Information and Regulatory Affairs in OMB and the Department of Education review all comments posted at *www.regulations.gov.*

In preparing your comments you may want to review the ICR, including the supporting materials, in *www.regulations.gov* by using the Docket ID number specified in this notice. This proposed collection is identified as proposed collection 1840–XXXX.

We consider your comments on this proposed collection of information in—

- Deciding whether the proposed collection is necessary for the proper performance of our functions, including whether the information will have practical use;
- Evaluating the accuracy of our estimate of the burden of the proposed collection, including the validity of our methodology and assumptions;
- Enhancing the quality, usefulness, and clarity of the information we collect; and
- Minimizing the burden on those who must respond. This includes exploring the use of appropriate automated, electronic, mechanical, or other technological collection techniques.

Between 30 and 60 days after publication of this document in the **Federal Register**, OMB is required to make a decision concerning the collection of information contained in these proposed priorities and definitions. Therefore, to ensure that OMB gives your comments full consideration, it is important that OMB receives your comments on this ICR by April 11, 2016. This does not affect the deadline for your comments to us on the proposed priorities and definitions.

If your comments relate to the ICR for these proposed priorities and definitions, please specify the Docket ID number and indicate ''Information Collection Comments'' on the top of your comments.

Intergovernmental Review: This program is subject to Executive Order 12372 and the regulations in 34 CFR part 79. One of the objectives of the Executive order is to foster an intergovernmental partnership and a strengthened federalism. The Executive order relies on processes developed by State and local governments for coordination and review of proposed Federal financial assistance.

This document provides early notification of our specific plans and actions for this program.

Accessible Format: Individuals with disabilities can obtain this document in an accessible format (*e.g.,* braille, large print, audiotape, or compact disc) on request to the program contact person listed under **FOR FURTHER INFORMATION CONTACT**.

Electronic Access to This Document: The official version of this document is the document published in the **Federal Register**. Free Internet access to the official edition of the **Federal Register** and the Code of Federal Regulations is available via the Federal Digital System at: *www.gpo.gov/fdsys.* At this site you can view this document, as well as all other documents of this Department published in the **Federal Register**, in text or Adobe Portable Document Format (PDF). To use PDF you must have Adobe Acrobat Reader, which is available free at the site.

You may also access documents of the Department published in the **Federal Register** by using the article search feature at: *www.federalregister.gov.* Specifically, through the advanced search feature at this site, you can limit your search to documents published by the Department.

Dated: March 4, 2016.

Lynn B. Mahaffie,

Deputy Assistant Secretary for Policy, Planning and Innovation, Delegated the Duties of Assistant Secretary for Postsecondary Education.

[FR Doc. 2016–05412 Filed 3–9–16; 8:45 am]

BILLING CODE 4000–01–P

DEPARTMENT OF VETERANS AFFAIRS

38 CFR Part 14

Recognition of Tribal Organizations for Representation of VA Claimants

AGENCY: Department of Veterans Affairs.

ACTION: Notice of Tribal consultation.

SUMMARY: The Department of Veterans Affairs (VA) is considering issuing a proposed rulemaking to amend its regulations concerning recognition of certain national, State, and regional or local organizations for purposes of VA claims representation. Specifically, the proposed rulemaking would amend VA's regulations to expressly provide for the VA recognition of Tribal organizations so that representatives of Tribal organizations may assist Native American claimants in the preparation, presentation, and prosecution of their VA benefit claims. In addition, the proposed rule would allow an employee of a Tribal government to become accredited through a recognized State organization.

DATES: Comments must be received by VA on or before April 11, 2016.

ADDRESSES: Written comments should be submitted by email at *Tribalgovernmentconsultation@va.gov,* by fax at 202–273–5716, or by mail at U.S. Department of Veterans Affairs, Suite 915E, 810 Vermont Avenue NW., Washington, DC 20420.

FOR FURTHER INFORMATION CONTACT: Clay Ward, VA Office of Tribal Government Relations at (202) 461–7445 (this is not a toll-free number), or by email at *Tribalgovernmentconsultation@va.gov,* or by mail at Suite 915B, 810 Vermont Avenue NW., Washington, DC 20420.

SUPPLEMENTARY INFORMATION: VA is considering issuing a proposed rulemaking that would amend part 14 of title 38, Code of Federal Regulations, to provide for the recognition of Tribal organizations so that representatives of the organizations may assist Native American claimants in the preparation, presentation, and prosecution of their VA benefit claims. The purpose of the proposed rulemaking would be to address the needs of Native American populations who are geographically isolated from existing recognized Veterans Service Organizations or who may not be utilizing other recognized Veterans Service Organizations due to cultural barriers or lack of familiarity with those organizations.

First, the proposed rulemaking would allow the Secretary of Veterans Affairs to recognize Tribal organizations in a similar manner as the Secretary recognizes State organizations. Specifically, the proposed rulemaking would consider applications from a Tribal organization that is established and funded by one or more Tribal governments to be recognized for the purpose of providing assistance on VA benefit claims. In addition, the proposed rulemaking would allow an employee of a Tribal government to become accredited through a recognized State organization in a similar manner as a county veterans' service officer may become accredited through a recognized State organization. Finally, the proposed rulemaking would extend office space opportunities already granted to employees of State organizations who are accredited to national organizations to similar employees of Tribal organizations. The intended effect of this proposed rule would be to improve access of Native American veterans to VA-recognized organizations and VA-accredited individuals who may assist them on their benefit claims. The proposed rulemaking would not preempt Tribal law. This Tribal consultation is seeking input from Tribal governments regarding VA's consideration of the issuance of such proposed rulemaking. VA is also seeking comment on the potential compliance costs.

In order to become accredited as a Tribal organization, the organization must show that it meets the requirements in 38 CFR 14.628(d). Pursuant to § 14.628(d), an organization requesting recognition must have as a primary purpose serving veterans; demonstrate a substantial service commitment to veterans either by showing a sizable organizational membership or by showing performance of veterans' services to a sizable number of veterans; commit a significant portion of its assets to veterans' services and have adequate funding to properly perform those services; maintain a policy and capability of providing complete claims service to each claimant requesting representation or give written notice of any limitation in its claims service with advice concerning the availability of alternative sources of claims service; and take affirmative action, including training and monitoring of accredited representatives, to ensure proper handling of claims. VA is seeking comment on the amount of time and the costs of persons' time to show that the organization meets these requirements. VA's Office of the General Counsel accepts recognition requests via mail, fax, or email.

Signing Authority: The Secretary of Veterans Affairs, or designee, approved this document and authorized the undersigned to sign and submit the document to the Office of the Federal Register for publication electronically as an official document of the Department of Veterans Affairs. Robert D. Snyder, Interim Chief of Staff, approved this document on March 3, 2016, for publication.

Approved: March 3, 2016.

William F. Russo,

Director, Office of Regulation Policy & Management, Department of Veterans Affairs.

[FR Doc. 2016–05163 Filed 3–9–16; 8:45 am]

BILLING CODE 8320–01–P

ENVIRONMENTAL PROTECTION AGENCY

40 CFR Part 52

[EPA–R05–OAR–2014–0658; FRL–9943–45–Region 5]

Air Plan Approval; Ohio; Base Year Emission Inventories for the 2008 8-Hour Ozone Standard

AGENCY: Environmental Protection Agency (EPA).

ACTION: Proposed rule.

SUMMARY: The Environmental Protection Agency (EPA) is proposing to approve, under the Clean Air Act (CAA), a State Implementation Plan (SIP) revision submitted by the Ohio Environmental Protection Agency (OEPA) on July 18, 2014, to address emission inventory requirements for the Cleveland-Akron-Loraine, Ohio (OH) and Columbus, OH ozone nonattainment areas and for the Ohio portion of the Cincinnati, Ohio-Kentucky-Indiana ozone nonattainment area under the 2008 ozone national ambient air quality standard. The CAA requires emission inventories for all ozone nonattainment areas. The emission inventories contained in Ohio's July 18, 2014, submission meet this CAA requirement. EPA is also proposing to confirm that the state of Ohio has acceptable stationary source annual emission statement regulations, which have been previously approved by the EPA.

DATES: Comments must be received on or before April 11, 2016.

ADDRESSES: Submit your comments, identified by Docket ID No. EPA–R05–OAR–2014–0658 at *http://www.regulations.gov* or via email to *Aburano.Douglas@epa.gov.* For comments submitted at *Regulations.gov*, follow the online instructions for submitting comments. Once submitted, comments cannot be edited or removed from Regulations.gov. For either manner of submission, EPA may publish any comment received to its public docket. Do not submit electronically any information you consider to be Confidential Business Information (CBI) or other information whose disclosure is restricted by statute. Multimedia submissions (audio, video, etc.) must be accompanied by a written comment. The written comment is considered the official comment and should include discussion of all points you wish to make. EPA will generally not consider comments or comment contents located outside of the primary submission (*i.e.* on the web, cloud, or other file sharing system). For additional submission methods, please contact the person identified in the **FOR FURTHER INFORMATION CONTACT** section. For the full EPA public comment policy, information about CBI or multimedia submissions, and general guidance on making effective comments, please visit *http://www2.epa.gov/dockets/commenting-epa-dockets.*

FOR FURTHER INFORMATION CONTACT: Edward Doty, Air Programs Branch (AR–18J), Environmental Protection Agency, 77 West Jackson Boulevard, Chicago, Illinois 60604, (312) 886–6057, *Doty.Edward@epa.gov.*

SUPPLEMENTARY INFORMATION: In the Rules and Regulations section of this **Federal Register**, EPA is approving Ohio's SIP revision submittal as a direct final rule without prior proposal because the Agency views this as a noncontroversial submittal and anticipates no adverse comments. A detailed rationale for the approval is set forth in the direct final rule. If no adverse comments are received in response to this rule, no further activity is contemplated. If EPA receives adverse comments, the direct final rule will be withdrawn and all public comments received will be addressed in a subsequent final rule based on this proposed rule. EPA will not institute a second comment period. Any parties interested in commenting on this action should do so at this time. Please note that, if EPA receives adverse comment on an amendment, paragraph, or section of this rule and if that provision may be severed from the remainder of the rule, EPA may adopt as final those provisions of the rule that are not the subject of an adverse comment. For additional information see the direct final rule, which is located in the Rules section of this **Federal Register**.

Dated: February 26, 2016.

Robert A. Kaplan,

Acting Regional Administrator, Region 5.

[FR Doc. 2016–05272 Filed 3–9–16; 8:45 am]

BILLING CODE 6560–50–P

ENVIRONMENTAL PROTECTION AGENCY

40 CFR Part 52

[EPA–R04–OAR–2015–0154; FRL–9943–44–Region 4]

Air Quality Plans; Tennessee; Infrastructure Requirements for the 2010 Sulfur Dioxide National Ambient Air Quality Standard

AGENCY: Environmental Protection Agency.

ACTION: Proposed rule.

SUMMARY: The Environmental Protection Agency (EPA) is proposing to approve the State Implementation Plan (SIP) submission, submitted by the State of Tennessee, through the Tennessee Department of Environment and Conservation (TDEC), on March 13, 2014, for inclusion into the Tennessee SIP. This proposal pertains to the infrastructure requirements of the Clean Air Act (CAA or Act) for the 2010 1-hour sulfur dioxide (SO_2) national ambient air quality standard (NAAQS). The CAA requires that each state adopt and submit a SIP for the implementation, maintenance and enforcement of each NAAQS promulgated by EPA, which is commonly referred to as an ''infrastructure SIP submission.'' TDEC certified that the Tennessee SIP contains provisions that ensure the 2010 1-hour SO_2 NAAQS is implemented, enforced, and maintained in Tennessee. EPA is proposing to determine that portions of Tennessee's infrastructure SIP submission, provided to EPA on March 13, 2014, satisfy certain required infrastructure elements for the 2010 1-hour SO_2 NAAQS.

DATES: Written comments must be received on or before April 11, 2016.

ADDRESSES: Submit your comments, identified by Docket ID No. EPA–R04–OAR–2015–0154 at *http://www.regulations.gov.* Follow the online instructions for submitting comments. Once submitted, comments cannot be edited or removed from Regulations.gov. The EPA may publish any comment received to its public docket. Do not submit electronically any information you consider to be Confidential Business Information (CBI) or other information whose disclosure is restricted by statute. Multimedia submissions (audio, video, etc.) must be accompanied by a written comment. The written comment is considered the official comment and should include discussion of all points you wish to make. The EPA will generally not consider comments or comment contents located outside of the primary submission (*i.e.*, on the web, cloud, or other file sharing system). For additional submission methods, the full EPA public comment policy, information about CBI or multimedia submissions, and general guidance on making effective comments, please visit *http://www2.epa.gov/dockets/commenting-epa-dockets.*

FOR FURTHER INFORMATION CONTACT: Michele Notarianni, Air Regulatory Management Section, Air Planning and Implementation Branch, Air, Pesticides and Toxics Management Division, U.S. Environmental Protection Agency, Region 4, 61 Forsyth Street SW., Atlanta, Georgia 30303–8960. Ms. Notarianni can be reached via electronic mail at *notarianni.michele@epa.gov* or via telephone at (404) 562–9031.

Table of Contents

I. Background and Overview
II. What elements are required under sections 110(a)(1) and (2)?
III. What is EPA's approach to the review of infrastructure SIP submissions?
IV. What is EPA's analysis of how Tennessee addressed the elements of the sections 110(a)(1) and (2) ''Infrastructure'' provisions?
V. Proposed Action
VI. Statutory and Executive Order Reviews

I. Background and Overview

On June 22, 2010 (75 FR 35520), EPA promulgated a revised primary SO_2 NAAQS to an hourly standard of 75 parts per billion (ppb) based on a 3-year average of the annual 99th percentile of 1-hour daily maximum concentrations. Pursuant to section 110(a)(1) of the CAA, states are required to submit SIPs meeting the applicable requirements of section 110(a)(2) within three years after promulgation of a new or revised NAAQS or within such shorter period as EPA may prescribe. Section 110(a)(2) requires states to address basic SIP elements such as requirements for monitoring, basic program requirements and legal authority that are designed to assure attainment and maintenance of the NAAQS. States were required to

submit such SIPs for the 2010 1-hour SO_2 NAAQS to EPA no later than June 22, 2013.[1]

Today's action is proposing to approve Tennessee's infrastructure SIP submission for certain applicable requirements of the 2010 1-hour SO_2 NAAQS. With respect to the interstate transport requirements of section 110(a)(2)(D)(i)(I) and (II) (prongs 1, 2, and 4), EPA is not proposing any action today regarding these requirements. For the aspects of Tennessee's submittal proposed for approval today, EPA notes that the Agency is not approving any specific rule, but rather proposing that Tennessee's already approved SIP meets certain CAA requirements.

II. What elements are required under sections 110(a)(1) and (2)?

Section 110(a) of the CAA requires states to submit SIPs to provide for the implementation, maintenance, and enforcement of a new or revised NAAQS within three years following the promulgation of such NAAQS, or within such shorter period as EPA may prescribe. Section 110(a) imposes the obligation upon states to make a SIP submission to EPA for a new or revised NAAQS, but the contents of that submission may vary depending upon the facts and circumstances. In particular, the data and analytical tools available at the time the state develops and submits the SIP for a new or revised NAAQS affects the content of the submission. The contents of such SIP submissions may also vary depending upon what provisions the state's existing SIP already contains.

More specifically, section 110(a)(1) provides the procedural and timing requirements for SIPs. Section 110(a)(2) lists specific elements that states must meet for ''infrastructure'' SIP requirements related to a newly established or revised NAAQS. As mentioned above, these requirements include basic SIP elements such as requirements for monitoring, basic program requirements and legal authority that are designed to assure attainment and maintenance of the NAAQS. The requirements are summarized below and in EPA's September 13, 2013, memorandum entitled ''Guidance on Infrastructure State Implementation Plan (SIP) Elements under Clean Air Act Sections 110(a)(1) and 110(a)(2).''[2]

- 110(a)(2)(A): Emission Limits and Other Control Measures
- 110(a)(2)(B): Ambient Air Quality Monitoring/Data System
- 110(a)(2)(C): Programs for Enforcement of Control Measures and for Construction or Modification of Stationary Sources[3]
- 110(a)(2)(D)(i)(I) and (II): Interstate Pollution Transport
- 110(a)(2)(D)(ii): Interstate Pollution Abatement and International Air Pollution
- 110(a)(2)(E): Adequate Resources and Authority, Conflict of Interest, and Oversight of Local Governments and Regional Agencies
- 110(a)(2)(F): Stationary Source Monitoring and Reporting
- 110(a)(2)(G): Emergency Powers
- 110(a)(2)(H): SIP Revisions
- 110(a)(2)(I): Plan Revisions for Nonattainment Areas[4]
- 110(a)(2)(J): Consultation with Government Officials, Public Notification, and Prevention of Significant Deterioration (PSD) and Visibility Protection
- 110(a)(2)(K): Air Quality Modeling and Submission of Modeling Data
- 110(a)(2)(L): Permitting fees
- 110(a)(2)(M): Consultation and Participation by Affected Local Entities

III. What is EPA's approach to the review of infrastructure SIP submissions?

EPA is acting upon the SIP submission from Tennessee that addresses the infrastructure requirements of CAA sections 110(a)(1) and 110(a)(2) for the 2010 1-hour SO_2 NAAQS. The requirement for states to make a SIP submission of this type arises out of CAA section 110(a)(1). Pursuant to section 110(a)(1), states must make SIP submissions ''within 3 years (or such shorter period as the Administrator may prescribe) after the promulgation of a national primary ambient air quality standard (or any revision thereof),'' and these SIP submissions are to provide for the ''implementation, maintenance, and enforcement'' of such NAAQS. The statute directly imposes on states the duty to make these SIP submissions, and the requirement to make the submissions is not conditioned upon EPA's taking any action other than promulgating a new or revised NAAQS. Section 110(a)(2) includes a list of specific elements that ''[e]ach such plan'' submission must address.

EPA has historically referred to these SIP submissions made for the purpose of satisfying the requirements of CAA sections 110(a)(1) and 110(a)(2) as ''infrastructure SIP'' submissions. Although the term ''infrastructure SIP'' does not appear in the CAA, EPA uses the term to distinguish this particular type of SIP submission from submissions that are intended to satisfy other SIP requirements under the CAA, such as ''nonattainment SIP'' or ''attainment plan SIP'' submissions to address the nonattainment planning requirements of part D of title I of the CAA, ''regional haze SIP'' submissions required by EPA rule to address the visibility protection requirements of CAA section 169A, and nonattainment new source review (NNSR) permit program submissions to address the permit requirements of CAA, title I, part D.

Section 110(a)(1) addresses the timing and general requirements for infrastructure SIP submissions, and section 110(a)(2) provides more details concerning the required contents of these submissions. The list of required elements provided in section 110(a)(2) contains a wide variety of disparate provisions, some of which pertain to required legal authority, some of which pertain to required substantive program provisions, and some of which pertain to requirements for both authority and substantive program provisions.[5] EPA

[1] In these infrastructure SIP submissions states generally certify evidence of compliance with sections 110(a)(1) and (2) of the CAA through a combination of state regulations and statutes, some of which have been incorporated into the federally-approved SIP. In addition, certain federally-approved, non-SIP regulations may also be appropriate for demonstrating compliance with sections 110(a)(1) and (2). Throughout this rulemaking, unless otherwise indicated, the term ''Tennessee Air Pollution Control Regulations'' or ''TAPCR XXXX–XX–XX'' indicates that the cited regulation has been approved into Tennessee's federally-approved SIP. The term ''Tennessee Air Quality Act'' or ''Tennessee Code Annotated'' or ''TCA XX–XX–XXXXX'' indicates cited Tennessee State statutes, which are not a part of the SIP unless otherwise indicated.

[2] Two elements identified in section 110(a)(2) are not governed by the three year submission deadline of section 110(a)(1) because SIPs incorporating necessary local nonattainment area controls are not due within three years after promulgation of a new or revised NAAQS, but rather are due at the time the nonattainment area plan requirements are due pursuant to section 172. These requirements are: (1) Submissions required by section 110(a)(2)(C) to the extent that subsection refers to a permit program as required in part D, title I of the CAA; and (2) submissions required by section 110(a)(2)(I) which pertain to the nonattainment planning requirements of part D, title I of the CAA. Today's proposed rulemaking does not address infrastructure elements related to section 110(a)(2)(I) or the nonattainment planning requirements of 110(a)(2)(C).

[3] This rulemaking only addresses requirements for this element as they relate to attainment areas.

[4] As mentioned above, this element is not relevant to today's proposed rulemaking.

[5] For example: Section 110(a)(2)(E)(i) provides that states must provide assurances that they have adequate legal authority under state and local law to carry out the SIP; section 110(a)(2)(C) provides that states must have a SIP-approved program to address certain sources as required by part C of title I of the CAA; and section 110(a)(2)(G) provides that states must have legal authority to address

therefore believes that while the timing requirement in section 110(a)(1) is unambiguous, some of the other statutory provisions are ambiguous. In particular, EPA believes that the list of required elements for infrastructure SIP submissions provided in section 110(a)(2) contains ambiguities concerning what is required for inclusion in an infrastructure SIP submission.

The following examples of ambiguities illustrate the need for EPA to interpret some section 110(a)(1) and section 110(a)(2) requirements with respect to infrastructure SIP submissions for a given new or revised NAAQS. One example of ambiguity is that section 110(a)(2) requires that ''each'' SIP submission must meet the list of requirements therein, while EPA has long noted that this literal reading of the statute is internally inconsistent and would create a conflict with the nonattainment provisions in part D of title I of the Act, which specifically address nonattainment SIP requirements.[6] Section 110(a)(2)(I) pertains to nonattainment SIP requirements and part D addresses when attainment plan SIP submissions to address nonattainment area requirements are due. For example, section 172(b) requires EPA to establish a schedule for submission of such plans for certain pollutants when the Administrator promulgates the designation of an area as nonattainment, and section 107(d)(1)(B) allows up to two years, or in some cases three years, for such designations to be promulgated.[7] This ambiguity illustrates that rather than apply all the stated requirements of section 110(a)(2) in a strict literal sense, EPA must determine which provisions of section 110(a)(2) are applicable for a particular infrastructure SIP submission.

Another example of ambiguity within sections 110(a)(1) and 110(a)(2) with respect to infrastructure SIPs pertains to whether states must meet all of the infrastructure SIP requirements in a single SIP submission, and whether EPA must act upon such SIP submission in a single action. Although section 110(a)(1) directs states to submit ''a plan'' to meet these requirements, EPA interprets the CAA to allow states to make multiple SIP submissions separately addressing infrastructure SIP elements for the same NAAQS. If states elect to make such multiple SIP submissions to meet the infrastructure SIP requirements, EPA can elect to act on such submissions either individually or in a larger combined action.[8] Similarly, EPA interprets the CAA to allow it to take action on the individual parts of one larger, comprehensive infrastructure SIP submission for a given NAAQS without concurrent action on the entire submission. For example, EPA has sometimes elected to act at different times on various elements and sub-elements of the same infrastructure SIP submission.[9]

Ambiguities within sections 110(a)(1) and 110(a)(2) may also arise with respect to infrastructure SIP submission requirements for different NAAQS. Thus, EPA notes that not every element of section 110(a)(2) would be relevant, or as relevant, or relevant in the same way, for each new or revised NAAQS. The states' attendant infrastructure SIP submissions for each NAAQS therefore could be different. For example, the monitoring requirements that a state might need to meet in its infrastructure SIP submission for purposes of section 110(a)(2)(B) could be very different for different pollutants because the content and scope of a state's infrastructure SIP submission to meet this element might be very different for an entirely new NAAQS than for a minor revision to an existing NAAQS.[10]

EPA notes that interpretation of section 110(a)(2) is also necessary when EPA reviews other types of SIP submissions required under the CAA. Therefore, as with infrastructure SIP submissions, EPA also has to identify and interpret the relevant elements of section 110(a)(2) that logically apply to these other types of SIP submissions. For example, section 172(c)(7) requires that attainment plan SIP submissions required by part D have to meet the ''applicable requirements'' of section 110(a)(2). Thus, for example, attainment plan SIP submissions must meet the requirements of section 110(a)(2)(A) regarding enforceable emission limits and control measures and section 110(a)(2)(E)(i) regarding air agency resources and authority. By contrast, it is clear that attainment plan SIP submissions required by part D would not need to meet the portion of section 110(a)(2)(C) that pertains to the PSD program required in part C of title I of the CAA, because PSD does not apply to a pollutant for which an area is designated nonattainment and thus subject to part D planning requirements. As this example illustrates, each type of SIP submission may implicate some elements of section 110(a)(2) but not others.

Given the potential for ambiguity in some of the statutory language of section 110(a)(1) and section 110(a)(2), EPA believes that it is appropriate to interpret the ambiguous portions of section 110(a)(1) and section 110(a)(2) in the context of acting on a particular SIP submission. In other words, EPA assumes that Congress could not have intended that each and every SIP submission, regardless of the NAAQS in question or the history of SIP development for the relevant pollutant, would meet each of the requirements, or meet each of them in the same way. Therefore, EPA has adopted an approach under which it reviews infrastructure SIP submissions against the list of elements in section 110(a)(2), but only to the extent each element applies for that particular NAAQS.

Historically, EPA has elected to use guidance documents to make recommendations to states for infrastructure SIPs, in some cases conveying needed interpretations on newly arising issues and in some cases conveying interpretations that have already been developed and applied to

emergencies as well as contingency plans that are triggered in the event of such emergencies.

[6] See, *e.g.,* ''Rule To Reduce Interstate Transport of Fine Particulate Matter and Ozone (Clean Air Interstate Rule); Revisions to Acid Rain Program; Revisions to the NO_X SIP Call; Final Rule,'' 70 FR 25162, at 25163–65 (May 12, 2005) (explaining relationship between timing requirement of section 110(a)(2)(D) versus section 110(a)(2)(I)).

[7] EPA notes that this ambiguity within section 110(a)(2) is heightened by the fact that various subparts of part D set specific dates for submission of certain types of SIP submissions in designated nonattainment areas for various pollutants. Note, *e.g.,* that section 182(a)(1) provides specific dates for submission of emissions inventories for the ozone NAAQS. Some of these specific dates are necessarily later than three years after promulgation of the new or revised NAAQS.

[8] See, *e.g.,* ''Approval and Promulgation of Implementation Plans; New Mexico; Revisions to the New Source Review (NSR) State Implementation Plan (SIP); Prevention of Significant Deterioration (PSD) and Nonattainment New Source Review (NNSR) Permitting,'' 78 FR 4339 (January 22, 2013) (EPA's final action approving the structural PSD elements of the New Mexico SIP submitted by the State separately to meet the requirements of EPA's 2008 $PM_{2.5}$ NSR rule), and ''Approval and Promulgation of Air Quality Implementation Plans; New Mexico; Infrastructure and Interstate Transport Requirements for the 2006 $PM_{2.5}$ NAAQS,'' (78 FR 4337) (January 22, 2013) (EPA's final action on the infrastructure SIP for the 2006 $PM_{2.5}$ NAAQS).

[9] On December 14, 2007, the State of Tennessee, through the Tennessee Department of Environment and Conservation, made a SIP revision to EPA demonstrating that the State meets the requirements of sections 110(a)(1) and (2). EPA proposed action for infrastructure SIP elements (C) and (J) on January 23, 2012 (77 FR 3213) and took final action on March 14, 2012 (77 FR 14976). On April 16, 2012 (77 FR 22533) and July 23, 2012 (77 FR 42997), EPA took separate proposed and final actions on all other section 110(a)(2) infrastructure SIP elements of Tennessee's December 14, 2007, submittal.

[10] For example, implementation of the 1997 $PM_{2.5}$ NAAQS required the deployment of a system of new monitors to measure ambient levels of that new indicator species for the new NAAQS.

individual SIP submissions for particular elements.[11] EPA most recently issued guidance for infrastructure SIPs on September 13, 2013 (2013 Guidance).[12] EPA developed this document to provide states with up-to-date guidance for infrastructure SIPs for any new or revised NAAQS. Within this guidance, EPA describes the duty of states to make infrastructure SIP submissions to meet basic structural SIP requirements within three years of promulgation of a new or revised NAAQS. EPA also made recommendations about many specific subsections of section 110(a)(2) that are relevant in the context of infrastructure SIP submissions.[13] The guidance also discusses the substantively important issues that are germane to certain subsections of section 110(a)(2). Significantly, EPA interprets sections 110(a)(1) and 110(a)(2) such that infrastructure SIP submissions need to address certain issues and need not address others. Accordingly, EPA reviews each infrastructure SIP submission for compliance with the applicable statutory provisions of section 110(a)(2), as appropriate.

As an example, section 110(a)(2)(E)(ii) is a required element of section 110(a)(2) for infrastructure SIP submissions. Under this element, a state must meet the substantive requirements of section 128, which pertain to state boards that approve permits or enforcement orders and heads of executive agencies with similar powers. Thus, EPA reviews infrastructure SIP submissions to ensure that the state's implementation plan appropriately addresses the requirements of section 110(a)(2)(E)(ii) and section 128. The 2013 Guidance explains EPA's interpretation that there may be a variety of ways by which states can appropriately address these substantive statutory requirements, depending on the structure of an individual state's permitting or enforcement program (*e.g.,* whether permits and enforcement orders are approved by a multi-member board or by a head of an executive agency). However they are addressed by the state, the substantive requirements of section 128 are necessarily included in EPA's evaluation of infrastructure SIP submissions because section 110(a)(2)(E)(ii) explicitly requires that the state satisfy the provisions of section 128.

As another example, EPA's review of infrastructure SIP submissions with respect to the PSD program requirements in sections 110(a)(2)(C), (D)(i)(II), and (J) focuses upon the structural PSD program requirements contained in part C and EPA's PSD regulations. Structural PSD program requirements include provisions necessary for the PSD program to address all regulated sources and new source review (NSR) pollutants, including greenhouse gases (GHG). By contrast, structural PSD program requirements do not include provisions that are not required under EPA's regulations at 40 CFR 51.166 but are merely available as an option for the state, such as the option to provide grandfathering of complete permit applications with respect to the 2012 fine particulate matter ($PM_{2.5}$) NAAQS. Accordingly, the latter optional provisions are types of provisions EPA considers irrelevant in the context of an infrastructure SIP action.

For other section 110(a)(2) elements, however, EPA's review of a state's infrastructure SIP submission focuses on assuring that the state's SIP meets basic structural requirements. For example, section 110(a)(2)(C) includes, *inter alia,* the requirement that states have a program to regulate minor new sources. Thus, EPA evaluates whether the state has an EPA-approved minor NSR program and whether the program addresses the pollutants relevant to that NAAQS. In the context of acting on an infrastructure SIP submission, however, EPA does not think it is necessary to conduct a review of each and every provision of a state's existing minor source program (*i.e.,* already in the existing SIP) for compliance with the requirements of the CAA and EPA's regulations that pertain to such programs.

With respect to certain other issues, EPA does not believe that an action on a state's infrastructure SIP submission is necessarily the appropriate type of action in which to address possible deficiencies in a state's existing SIP. These issues include: (i) Existing provisions related to excess emissions from sources during periods of startup, shutdown, or malfunction that may be contrary to the CAA and EPA's policies addressing such excess emissions (''SSM''); (ii) existing provisions related to ''director's variance'' or ''director's discretion'' that may be contrary to the CAA because they purport to allow revisions to SIP-approved emissions limits while limiting public process or not requiring further approval by EPA; and (iii) existing provisions for PSD programs that may be inconsistent with current requirements of EPA's ''Final NSR Improvement Rule,'' 67 FR 80186 (December 31, 2002), as amended by 72 FR 32526 (June 13, 2007) (''NSR Reform''). Thus, EPA believes it may approve an infrastructure SIP submission without scrutinizing the totality of the existing SIP for such potentially deficient provisions and may approve the submission even if it is aware of such existing provisions.[14] It is important to note that EPA's approval of a state's infrastructure SIP submission should not be construed as explicit or implicit re-approval of any existing potentially deficient provisions that relate to the three specific issues just described.

EPA's approach to review of infrastructure SIP submissions is to identify the CAA requirements that are logically applicable to that submission. EPA believes that this approach to the review of a particular infrastructure SIP submission is appropriate, because it would not be reasonable to read the general requirements of section 110(a)(1) and the list of elements in 110(a)(2) as requiring review of each and every provision of a state's existing SIP against all requirements in the CAA and EPA regulations merely for purposes of assuring that the state in question has the basic structural elements for a functioning SIP for a new or revised NAAQS. Because SIPs have grown by accretion over the decades as statutory and regulatory requirements under the CAA have evolved, they may include some outmoded provisions and historical artifacts. These provisions, while not fully up to date, nevertheless may not pose a significant problem for

[11] EPA notes, however, that nothing in the CAA requires EPA to provide guidance or to promulgate regulations for infrastructure SIP submissions. The CAA directly applies to states and requires the submission of infrastructure SIP submissions, regardless of whether or not EPA provides guidance or regulations pertaining to such submissions. EPA elects to issue such guidance in order to assist states, as appropriate.

[12] ''Guidance on Infrastructure State Implementation Plan (SIP) Elements under Clean Air Act sections 110(a)(1) and 110(a)(2),'' Memorandum from Stephen D. Page, September 13, 2013.

[13] EPA's September 13, 2013, guidance did not make recommendations with respect to infrastructure SIP submissions to address section 110(a)(2)(D)(i)(I). EPA issued the guidance shortly after the U.S. Supreme Court agreed to review the D.C. Circuit decision in *EME Homer City,* 696 F.3d7 (D.C. Cir. 2012) which had interpreted the requirements of section 110(a)(2)(D)(i)(I). In light of the uncertainty created by ongoing litigation, EPA elected not to provide additional guidance on the requirements of section 110(a)(2)(D)(i)(I) at that time. As the guidance is neither binding nor required by statute, whether EPA elects to provide guidance on a particular section has no impact on a state's CAA obligations.

[14] By contrast, EPA notes that if a state were to include a new provision in an infrastructure SIP submission that contained a legal deficiency, such as a new exemption for excess emissions during SSM events, then EPA would need to evaluate that provision for compliance against the rubric of applicable CAA requirements in the context of the action on the infrastructure SIP.

the purposes of ''implementation, maintenance, and enforcement'' of a new or revised NAAQS when EPA evaluates adequacy of the infrastructure SIP submission. EPA believes that a better approach is for states and EPA to focus attention on those elements of section 110(a)(2) of the CAA most likely to warrant a specific SIP revision due to the promulgation of a new or revised NAAQS or other factors.

For example, EPA's 2013 Guidance gives simpler recommendations with respect to carbon monoxide than other NAAQS pollutants to meet the visibility requirements of section 110(a)(2)(D)(i)(II), because carbon monoxide does not affect visibility. As a result, an infrastructure SIP submission for any future new or revised NAAQS for carbon monoxide need only state this fact in order to address the visibility prong of section 110(a)(2)(D)(i)(II).

Finally, EPA believes that its approach with respect to infrastructure SIP requirements is based on a reasonable reading of sections 110(a)(1) and 110(a)(2) because the CAA provides other avenues and mechanisms to address specific substantive deficiencies in existing SIPs. These other statutory tools allow EPA to take appropriately tailored action, depending upon the nature and severity of the alleged SIP deficiency. Section 110(k)(5) authorizes EPA to issue a ''SIP call'' whenever the Agency determines that a state's SIP is substantially inadequate to attain or maintain the NAAQS, to mitigate interstate transport, or to otherwise comply with the CAA.[15] Section 110(k)(6) authorizes EPA to correct errors in past actions, such as past approvals of SIP submissions.[16] Significantly, EPA's determination that an action on a state's infrastructure SIP submission is not the appropriate time and place to address all potential existing SIP deficiencies does not preclude EPA's subsequent reliance on provisions in section 110(a)(2) as part of the basis for action to correct those deficiencies at a later time. For example, although it may not be appropriate to require a state to eliminate all existing inappropriate director's discretion provisions in the course of acting on an infrastructure SIP submission, EPA believes that section 110(a)(2)(A) may be among the statutory bases that EPA relies upon in the course of addressing such deficiency in a subsequent action.[17]

IV. What is EPA's analysis of how Tennessee addressed the elements of the sections 110(a)(1) and (2) ''Infrastructure'' provisions?

The Tennessee infrastructure submission addresses the provisions of sections 110(a)(1) and (2) as described below.

1. 110(a)(2)(A) *Emission Limits and Other Control Measures:* Section 110(a)(2)(A) requires that each implementation plan include enforceable emission limitations and other control measures, means, or techniques (including economic incentives such as fees, marketable permits, and auctions of emissions rights), as well as schedules and timetables for compliance, as may be necessary or appropriate to meet the applicable requirements. Several regulations within Tennessee's SIP are relevant to air quality control regulations. The regulations described below include enforceable emission limitations and other control measures. SIP-approved Tennessee Air Pollution Control Regulations (TAPCR) 1200–03–03, *Ambient Air Quality Standards,* 1200–03–04, *Open Burning,* 1200–03–06, *Non-process Emission Standards,* 1200–03–07, *Process Emission Standards,* 1200–03–09, *Construction and Operating Permits,* 1200–03–14, *Control of Sulfur Dioxide Emission,* 1200–03–19, *Emission Standards and Monitoring Requirements for Additional Control Areas,* 1200–03–21, *General Alternate Emission Standards,* and 1200–03–24, *Good Engineering Practice Stack Height Regulations,* collectively establish enforceable emissions limitations and other control measures, means or techniques, for activities that contribute to SO_2 concentrations in the ambient air, and provide authority for TDEC to establish such limits and measures as well as schedules for compliance to meet the applicable requirements of the CAA. Additionally, State statutes established in the Tennessee Air Quality Act and adopted in the Tennessee Code Annotated (TCA) section 68–201–105(a), *Powers and duties of board—Notification of vacancy—Termination due to vacancy,* provide the Tennessee Air Pollution Control Board and TDEC's Division of Air Pollution Control the authority to take actions in support of this infrastructure element such as issue permits, promulgate regulations, and issue orders to implement the Tennessee Air Quality Act and the CAA, as relevant. EPA has made the preliminary determination that the provisions contained in these State regulations and State statute satisfy Section 110(a)(2)(A) for the 2010 1-hour SO_2 NAAQS in the State.

In this action, EPA is not proposing to approve or disapprove any existing state provisions with regard to excess emissions during start up, shut down, and malfunction (SSM) operations at a facility. EPA believes that a number of states have SSM provisions which are contrary to the CAA and existing EPA guidance, ''State Implementation Plans: Policy Regarding Excess Emissions During Malfunctions, Startup, and Shutdown'' (September 20, 1999), and the Agency is addressing such state regulations in a separate action.[18]

Additionally, in this action, EPA is not proposing to approve or disapprove any existing state rules with regard to director's discretion or variance provisions. EPA believes that a number of states have such provisions which are contrary to the CAA and existing EPA guidance (52 FR 45109 (November 24, 1987)), and the Agency plans to take action in the future to address such state regulations. In the meantime, EPA encourages any state having a director's discretion or variance provision which is contrary to the CAA and EPA guidance to take steps to correct the deficiency as soon as possible.

2. 110(a)(2)(B) *Ambient Air Quality Monitoring/Data System:* Section 110(a)(2)(B) requires SIPs to provide for establishment and operation of appropriate devices, methods, systems, and procedures necessary to (i) monitor, compile, and analyze data on ambient

[15] For example, EPA issued a SIP call to Utah to address specific existing SIP deficiencies related to the treatment of excess emissions during SSM events. See ''Finding of Substantial Inadequacy of Implementation Plan; Call for Utah State Implementation Plan Revisions,'' 74 FR 21639 (April 18, 2011).

[16] EPA has used this authority to correct errors in past actions on SIP submissions related to PSD programs. See ''Limitation of Approval of Prevention of Significant Deterioration Provisions Concerning Greenhouse Gas Emitting-Sources in State Implementation Plans; Final Rule,'' 75 FR 82536 (December 30, 2010). EPA has previously used its authority under CAA section 110(k)(6) to remove numerous other SIP provisions that the Agency determined it had approved in error. See, *e.g.,* 61 FR 38664 (July 25, 1996) and 62 FR 34641 (June 27, 1997) (corrections to American Samoa, Arizona, California, Hawaii, and Nevada SIPs); 69 FR 67062 (November 16, 2004) (corrections to California SIP); and 74 FR 57051 (November 3, 2009) (corrections to Arizona and Nevada SIPs).

[17] See, *e.g.,* EPA's disapproval of a SIP submission from Colorado on the grounds that it would have included a director's discretion provision inconsistent with CAA requirements, including section 110(a)(2)(A). See, *e.g.,* 75 FR 42342 at 42344 (July 21, 2010) (proposed disapproval of director's discretion provisions); 76 FR 4540 (Jan. 26, 2011) (final disapproval of such provisions).

[18] On June 12, 2015, EPA published a final action entitled, ''State Implementation Plans: Response to Petition for Rulemaking; Restatement and Update of EPA's SSM Policy Applicable to SIPs; Findings of Substantial Inadequacy; and SIP Calls to Amend Provisions Applying to Excess Emissions During Periods of Startup, Shutdown, and Malfunction.'' *See* 80 FR 33840.

air quality, and (ii) upon request, make such data available to the Administrator. TCA 68–201–105(b)(4) gives TDEC the authority to provide technical, scientific and other services as may be required to implement the provisions of the Tennessee Air Quality Act. Annually, states develop and submit to EPA for approval statewide ambient monitoring network plans consistent with the requirements of 40 CFR parts 50, 53, and 58. The annual network plan involves an evaluation of any proposed changes to the monitoring network, includes the annual ambient monitoring network design plan, and includes a certified evaluation of the agency's ambient monitors and auxiliary support equipment.[19] On June 30, 2015, Tennessee submitted its most recent plan to EPA, which was approved by EPA on October 26, 2015, with the exception of two aspects—one related to a monitor for the SO_2 nonattainment area in Sullivan County, and the other related to a monitor for ozone and fine particulate in Loudon County.[20] Tennessee's monitoring network plan can be accessed at *www.regulations.gov* using Docket ID No. EPA–R04–OAR–2015–0154. EPA has made the preliminary determination that Tennessee's SIP and practices are adequate for the ambient air quality monitoring and data system related to the 2010 1-hour SO_2 NAAQS.

3. 110(a)(2)(C) *Programs for Enforcement of Control Measures and for Construction or Modification of Stationary Sources:* This element consists of three sub-elements: enforcement, state-wide regulation of new and modified minor sources and minor modifications of major sources, and preconstruction permitting of major sources and major modifications in areas designated attainment or unclassifiable for the subject NAAQS as required by CAA title I part C (*i.e.,* the major source PSD program). TDEC's 2010 1-hour SO_2 NAAQS infrastructure SIP submission cites a number of SIP provisions to address these requirements. EPA's rationale for its proposed action regarding each sub-element is described below.

Enforcement: The following SIP-approved regulation provides TDEC with authority for enforcement of SO_2 emission limits and control measures. TAPCR 1200–3–13–01, *Violation Statement,* states that, ''Failure to comply with any of the provisions of these regulations shall constitute a violation thereof and shall subject the person or persons responsible therefore to any and all the penalties provided by law.'' Also note, under TCA 68–201–116, *Orders and assessments of damages and civil penalty—Appeal,* the State's Technical Secretary is authorized to issue orders requiring correction of violations of any part of the Tennessee Air Quality Act, or of any regulation promulgated under this State statute. Violators are subject to civil penalties of up to 25,000 dollars per day for each day of violation and for any damages to the State resulting from the violations.

Preconstruction PSD Permitting for Major Sources: EPA interprets the PSD sub-element to require that a state's infrastructure SIP submission for a particular NAAQS demonstrate that the state has a complete PSD permitting program in place covering the structural PSD requirements for all regulated NSR pollutants. A state's PSD permitting program is complete for this sub-element (and prong 3 of D(i) and J related to PSD) if EPA has already approved or is simultaneously approving the state's implementation plan with respect to all structural PSD requirements that are due under the EPA regulations or the CAA on or before the date of the EPA's proposed action on the infrastructure SIP submission. For the 2010 1-hour SO_2 NAAQS, Tennessee's authority to regulate construction of new and modified stationary sources to assist in the protection of air quality in attainment or unclassifiable areas is established in TAPCR 1200–03–09–01(4), *Prevention of Significant Deterioration of Air Quality.* Tennessee's infrastructure SIP submission demonstrates that new major sources and major modifications in areas of the State designated attainment or unclassifiable for the specified NAAQS are subject to a federally-approved PSD permitting program meeting all the current structural requirements of part C of title I of the CAA to satisfy the infrastructure SIP PSD elements.[21]

Regulation of minor sources and modifications: Section 110(a)(2)(C) also requires the SIP to include provisions that govern the minor source program that regulates emissions of the 2010 1-hour SO_2 NAAQS. TAPCR 1200–03–09–01, *Construction Permits,* and TAPCR 1200–03–09–03, *General Provisions,* collectively govern the preconstruction permitting of modifications and construction of minor stationary sources, and minor modifications of major stationary sources.

EPA has made the preliminary determination that Tennessee's SIP and practices are adequate for program enforcement of control measures, regulation of minor sources and modifications, and preconstruction permitting of major sources and major modifications related to the 2010 1-hour SO_2 NAAQS.

4. 110(a)(2)(D)(i)(I) and (II) *Interstate Pollution Transport:* Section 110(a)(2)(D)(i) has two components: 110(a)(2)(D)(i)(I) and 110(a)(2)(D)(i)(II). Each of these components has two subparts resulting in four distinct components, commonly referred to as ''prongs,'' that must be addressed in infrastructure SIP submissions. The first two prongs, which are codified in section 110(a)(2)(D)(i)(I), are provisions that prohibit any source or other type of emissions activity in one state from contributing significantly to nonattainment of the NAAQS in another state (''prong 1''), and interfering with maintenance of the NAAQS in another state (''prong 2''). The third and fourth prongs, which are codified in section 110(a)(2)(D)(i)(II), are provisions that prohibit emissions activity in one state from interfering with measures required to prevent significant deterioration of air quality in another state (''prong 3''), or to protect visibility in another state (''prong 4'').

110(a)(2)(D)(i)(I)—prongs 1, and 2: EPA is not proposing any action in this rulemaking related to the interstate transport provisions pertaining to the contribution to nonattainment or interference with maintenance in other states of section 110(a)(2)(D)(i)(I) (prongs 1 and 2) because Tennessee's 2010 1-hour SO_2 NAAQS infrastructure submission did not address prongs 1 and 2.

110(a)(2)(D)(i)(II)—prong 3: With regard to section 110(a)(2)(D)(i)(II), the PSD element, referred to as prong 3, may be met by a state's confirmation in an infrastructure SIP submission that new major sources and major modifications in the state are subject to a PSD program meeting all the current structural requirements of part C of title I of the CAA, or (if the state contains a nonattainment area that has the potential to impact PSD in another

[19] The annual network plans are approved by EPA in accordance with 40 CFR part 58, and, on occasion, proposed changes to the monitoring network are evaluated outside of the network plan approval process in accordance with 40 CFR part 58.

[20] Once EPA is in agreement with the proposed locations for the monitoring sites in Sullivan and Loudon Counties, the State is required to make the network plan updates available for public inspection and submit an addendum to its network plan for EPA approval in accordance with 40 CFR part 58.

[21] More information concerning how the Tennessee infrastructure SIP submission currently meets applicable requirements for the PSD elements (110(a)(2)(C); (D)(i)(I), prong 3; and (J)) can be found in the technical support document in the docket for today's rulemaking.

state), a NNSR program. As discussed in more detail above under section 110(a)(2)(C), Tennessee's SIP contains provisions for the State's PSD program that reflects the required structural PSD requirements to satisfy prong 3 of section 110(a)(2)(D)(i)(II). Tennessee addresses prong 3 through TAPCR 1200–03–09–01(4), *Prevention of Significant Deterioration of Air Quality,* and TAPCR 1200–03–09–01(5), *Growth Policy,* for the PSD and NNSR programs, respectively. EPA has made the preliminary determination that Tennessee's SIP is adequate for interstate transport for PSD permitting of major sources and major modifications related to the 2010 1-hour SO_2 NAAQS for section 110(a)(2)(D)(i)(II) (prong 3).

110(a)(2)(D)(i)(II)—prong 4: EPA is not proposing any action in this rulemaking related to the interstate transport provisions pertaining to visibility in other states of section 110(a)(2)(D)(i)(II) (prong 4) and will consider these requirements in relation to Tennessee's 2010 1-hour SO_2 NAAQS infrastructure submission in a separate rulemaking.

5. 110(a)(2)(D)(ii): *Interstate Pollution Abatement and International Air Pollution:* Section 110(a)(2)(D)(ii) requires SIPs to include provisions ensuring compliance with sections 115 and 126 of the Act, relating to interstate and international pollution abatement. Regulation 1200–03–09–03, *General Provisions,* requires the permitting authority to notify air agencies whose areas may be affected by emissions from a source. Additionally, Tennessee does not have any pending obligation under sections 115 and 126 of the CAA relating to international or interstate pollution abatement. EPA has made the preliminary determination that Tennessee's SIP and practices are adequate for ensuring compliance with the applicable requirements relating to interstate and international pollution abatement for the 2010 1-hour SO_2 NAAQS.

6. 110(a)(2)(E) *Adequate Resources and Authority, Conflict of Interest, and Oversight of Local Governments and Regional Agencies:* Section 110(a)(2)(E) requires that each implementation plan provide: (i) Necessary assurances that the state will have adequate personnel, funding, and authority under state law to carry out its implementation plan, (ii) that the state comply with the requirements respecting state boards pursuant to section 128 of the Act, and (iii) necessary assurances that, where the state has relied on a local or regional government, agency, or instrumentality for the implementation of any plan provision, the state has responsibility for ensuring adequate implementation of such plan provisions. EPA is proposing to approve Tennessee's infrastructure SIP submission as meeting the requirements of sub-elements 110(a)(2)(E)(i), (ii), and (iii). EPA's rationale for today's proposal respecting each section of 110(a)(2)(E) is described in turn below.

In support of EPA's proposal to approve sub-elements 110(a)(2)(E)(i) and (iii), TCA 68–201–105, *Powers and duties of board—Notification of vacancy—Termination due to vacancy,* gives the Tennessee Air Pollution Control Board the power and duty to promulgate rules and regulations to implement the Tennessee Air Quality Act. The Board may define ambient air quality standards, set emission standards, set forth general policies or plans, establish a system of permits, and identify a schedule of fees for review of plans and specifications, issuance or renewal of permits or inspection of air contaminant sources.

TAPCR 1200–03–26, *Administrative Fees Schedule,* establishes construction fees, annual emission fees, and permit review fees sufficient to supplement existing State and Federal funding and to cover reasonable costs associated with the administration of Tennessee's air pollution control program. These costs include costs associated with the review of permit applications and reports, issuance of permits, source inspections and emission unit observations, review and evaluation of stack and/or ambient monitoring results, modeling, and costs associated with enforcement actions.

TCA 68–201–115, *Local pollution control programs—Exemption from state supervision—Applicability of part to air contaminant sources burning wood waste—Open burning of wood waste,* states that ''Any municipality or county in this state may enact, by ordinance or resolution respectively, air pollution control regulations not less stringent than the standards adopted for the state pursuant to this part, or any such municipality or county may also adopt or repeal an ordinance or resolution which incorporates by reference any or all of the regulations of the board, or any federal regulations including any changes in such regulations, when such regulations are properly identified as to date and source.'' Before such ordinances or resolutions become effective, the municipality or county must receive a certificate of exemption from the Board to enact local regulations in the State. In granting any certificate of exemption, the State of Tennessee reserves the right to enforce any applicable resolution, ordinance, or regulation of the local program.

TCA 68–201–115 also directs TDEC to ''frequently determine whether or not any exempted municipality or county meets the terms of the exemption granted and continues to comply with this section.'' If TDEC determines that the local program does not meet the terms of the exemption or does not otherwise comply with the law, the Board may suspend the exemption in whole or in part until the local program complies with the State standards.

As evidence of the adequacy of TDEC's resources with respect to sub-elements (i) and (iii), EPA submitted a letter to Tennessee on March 9, 2015, outlining section 105 grant commitments and the current status of these commitments for fiscal year 2014. The letter EPA submitted to Tennessee can be accessed at *www.regulations.gov* using Docket ID No. EPA–R04–OAR–2015–0154. Annually, states update these grant commitments based on current SIP requirements, air quality planning, and applicable requirements related to the NAAQS. Tennessee satisfactorily met all commitments agreed to in the Air Planning Agreement for fiscal year 2014, therefore Tennessee's grants were finalized and closed out. EPA has made the preliminary determination that Tennessee has adequate resources and authority for implementation of the 2010 1-hour SO_2 NAAQS.

Section 110(a)(2)(E)(ii) requires that the state comply with section 128 of the CAA. Section 128 requires that the SIP provide: (a)(1) the majority of members of the state board or body which approves permits or enforcement orders represent the public interest and do not derive any significant portion of their income from persons subject to permitting or enforcement orders under the CAA; and (a)(2) any potential conflicts of interest by such board or body, or the head of an executive agency with similar powers be adequately disclosed. Section 110(a)(2)(E)(ii) obligations for the 2010 1-hour SO_2 NAAQS and the requirements of CAA section 128 are met in Regulation 0400–30–17, *Conflict of Interest.*[22]

EPA has made the preliminary determination that the State has adequately addressed the requirements of section 128, and accordingly has met the requirements of section 110(a)(2)(E)(ii) with respect to infrastructure SIP requirements. Therefore, EPA is proposing to approve Tennessee's infrastructure SIP submission as meeting the requirements

[22] *See* 79 FR 18453 (April 2, 2014).

of sub-elements 110(a)(2)(E)(i), (ii) and (iii).

7. 110(a)(2)(F) *Stationary Source Monitoring and Reporting:* Section 110(a)(2)(F) requires SIPs to meet applicable requirements addressing (i) the installation, maintenance, and replacement of equipment, and the implementation of other necessary steps, by owners or operators of stationary sources to monitor emissions from such sources, (ii) periodic reports on the nature and amounts of emissions and emissions related data from such sources, and (iii) correlation of such reports by the state agency with any emission limitations or standards established pursuant to this section, which reports shall be available at reasonable times for public inspection. TDEC's infrastructure SIP submission identifies requirements for compliance testing by emissions sampling and analysis, and for emissions and operation monitoring to ensure the quality of data in the State, and also the collection of source emission data throughout the State and the assurance of the quality of such data. These data are used to compare against current emission limits and to meet requirements of EPA's Air Emissions Reporting Rule (AERR). Specifically, TAPCR 1200–03–10, *Required Sampling, Recording, and Reporting,* gives the State's Technical Secretary the authority to monitor emissions at stationary sources, and to require these sources to conduct emissions monitoring and to submit periodic emissions reports. This rule requires owners or operators of stationary sources to compute emissions, submit periodic reports of such emissions and maintain records as specified by various regulations and permits, and to evaluate reports and records for consistency with the applicable emission limitation or standard on a continuing basis over time. The monitoring data collected and records of operations serve as the basis for a source to certify compliance, and can be used by Tennessee as direct evidence of an enforceable violation of the underlying emission limitation or standard.

Additionally, Tennessee is required to submit emissions data to EPA for purposes of the National Emissions Inventory (NEI). The NEI is EPA's central repository for air emissions data. EPA published the AERR on December 5, 2008, which modified the requirements for collecting and reporting air emissions data (73 FR 76539). The AERR shortened the time states had to report emissions data from 17 to 12 months, giving states one calendar year to submit emissions data. All states are required to submit a comprehensive emissions inventory every three years and report emissions for certain larger sources annually through EPA's online Emissions Inventory System. States report emissions data for the six criteria pollutants and the precursors that form them—NO_X, SO_2, ammonia, lead, carbon monoxide, particulate matter, and volatile organic compounds. Many states also voluntarily report emissions of hazardous air pollutants. Tennessee made its latest update to the 2011 NEI on April 9, 2014. EPA compiles the emissions data, supplementing it where necessary, and releases it to the general public through the Web site *http://www.epa.gov/ttn/chief/eiinformation.html.* EPA has made the preliminary determination that Tennessee's SIP and practices are adequate for the stationary source monitoring systems related to the 2010 1-hour SO_2 NAAQS.

Regarding credible evidence, TAPCR 1200–3–10–04, *Sampling, Recording, and Reporting Required for Major Stationary Sources,* states that: ''the Technical Secretary is authorized to require by permit condition any periodic or enhanced monitoring, recording and reporting that he deems necessary for the verification of the source's compliance with the applicable requirements as defined in paragraph 1200–03–09–02(11).'' EPA is unaware of any provision preventing the use of credible evidence in the Tennessee SIP. EPA has made the preliminary determination that Tennessee's SIP and practices are adequate for the stationary source monitoring systems related to the 1-hour SO_2 NAAQS. Accordingly, EPA is proposing to approve Tennessee's infrastructure SIP submission with respect to section 110(a)(2)(F).

8. 110(a)(2)(G): *Emergency Powers:* Section 110(a)(2)(G) of the Act requires that states demonstrate authority comparable with section 303 of the CAA and adequate contingency plans to implement such authority. Tennessee's emergency powers are outlined in TAPCR 1200–03–15, *Emergency Episode Plan,* which establishes the criteria for declaring an air pollution episode (air pollution alert, air pollution warning, or air pollution emergency), specific emissions reductions for each episode level, and emergency episode plan requirements for major sources located in or significantly impacting a nonattainment area. Additional emergency powers are codified in TCA 68–201–109, *Emergency Stop Orders for Air Contaminant Sources.* Under TCA 68–201–109, if the Commissioner of TDEC finds that emissions from the operation of one or more sources are causing imminent danger to human health and safety, the Commissioner may, with the approval of the Governor, order the source(s) responsible to reduce or discontinue immediately its (their) air emissions. Additionally, this State law requires a hearing to be held before the Commissioner within 24 hours of any such order.

Regarding the public welfare and environment, TCA 68–201–106, *Matters to be considered in exercising powers,* states that ''In exercising powers to prevent, abate and control air pollution, the board or department shall give due consideration to all pertinent facts, including, but not necessarily limited to: (1) The character and degree of injury to, or interference with, the protection of the health, general welfare and physical property of the people . . .'' Also, TCA 68–201–116, *Orders and assessments of damages and civil penalty Appeal,* provides in subsection (a) that if the Tennessee technical secretary discovers that any State air quality regulation has been violated, the Tennessee technical secretary may issue an order to correct the violation, and this order shall be complied with within the time limit specified in the order. EPA has made the preliminary determination that Tennessee's SIP and practices are adequate for emergency powers related to the 2010 1-hour SO_2 NAAQS. Accordingly, EPA is proposing to approve Tennessee's infrastructure SIP submission with respect to section 110(a)(2)(G).

9. 110(a)(2)(H) *SIP Revisions:* Section 110(a)(2)(H), in summary, requires each SIP to provide for revisions of such plan (i) as may be necessary to take account of revisions of such national primary or secondary ambient air quality standard or the availability of improved or more expeditious methods of attaining such standard, and (ii) whenever the Administrator finds that the plan is substantially inadequate to attain the NAAQS or to otherwise comply with any additional applicable requirements. As previously discussed, TDEC is responsible for adopting air quality rules and revising SIPs as needed to attain or maintain the NAAQS in Tennessee.

Section 68–201–105(a) of the Tennessee Air Quality Act authorizes the Tennessee Air Pollution Control Board to promulgate rules and regulations to implement this State statute, including setting and implementing ambient air quality standards, emission standards, general policies or plans, a permits system, and a schedule of fees for review of plans and specifications, issuance or renewal of permits, and inspection of sources.

EPA has made the preliminary determination that Tennessee's SIP and practices adequately demonstrate a commitment to provide future SIP revisions related to the 2010 1-hour SO_2 NAAQS when necessary. Accordingly, EPA is proposing to approve Tennessee's infrastructure SIP submission with respect to section 110(a)(2)(H).

10. 110(a)(2)(J) *Consultation with Government Officials, Public Notification, and PSD and Visibility Protection:* EPA is proposing to approve Tennessee's infrastructure SIP submission for the 2010 1-hour SO_2 NAAQS with respect to the general requirement in section 110(a)(2)(J) to include a program in the SIP that complies with the applicable consultation requirements of section 121, the public notification requirements of section 127, PSD and visibility protection. EPA's rationale for each sub-element is described below.

Consultation with government officials (121 consultation): Section 110(a)(2)(J) of the CAA requires states to provide a process for consultation with local governments, designated organizations and Federal Land Managers carrying out NAAQS implementation requirements pursuant to section 121 relative to consultation. The following State rule, as well as the State's Regional Haze Implementation Plan (which allows for consultation between appropriate state, local, and tribal air pollution control agencies as well as the corresponding Federal Land Managers), provide for consultation with government officials whose jurisdictions might be affected by SIP development activities: TAPCR 1200–03–34, *Conformity,* provides for interagency consultation on transportation and general conformity issues. Tennessee adopted state-wide consultation procedures for the implementation of transportation conformity which includes the development of mobile inventories for SIP development. These consultation procedures were developed in coordination with the transportation partners in the State and are consistent with the approaches used for development of mobile inventories for SIPs. Required partners covered by Tennessee's consultation procedures include Federal, state and local transportation and air quality agency officials. EPA has made the preliminary determination that Tennessee's SIP and practices adequately demonstrate consultation with government officials related to the 2010 1-hour SO_2 NAAQS when necessary. Accordingly, EPA is proposing to approve Tennessee's infrastructure SIP submission with respect to section 110(a)(2)(J) consultation with government officials.

Public notification: These requirements are met through the State's existing Air Quality Index and Air Quality Forecasting programs, which provide a method to alert the public if any NAAQS is exceeded in an area. Additionally, the State's annual monitoring plan update is sent out each year for public review and comment. EPA has made the preliminary determination that Tennessee's SIP and practices adequately demonstrate the State's ability to provide public notification related to the 2010 1-hour SO_2 NAAQS when necessary. Accordingly, EPA is proposing to approve Tennessee's infrastructure SIP submission with respect to section 110(a)(2)(J) public notification.

PSD: With regard to the PSD element of section 110(a)(2)(J), this requirement may be met by a state's confirmation in an infrastructure SIP submission that new major sources and major modifications in the state are subject to a PSD program meeting all the current structural requirements of part C of title I of the CAA. As discussed in more detail above under section 110(a)(2)(C), Tennessee's SIP contains provisions for the State's PSD program that reflect the relevant SIP revisions pertaining to the required structural PSD requirements to satisfy the requirement of the PSD element of section 110(a)(2)(J). EPA has made the preliminary determination that Tennessee's SIP and practices are adequate for PSD permitting of major sources and major modifications related to the 2010 1-hour SO_2 NAAQS for the PSD element of section 110(a)(2)(J). Accordingly, EPA is proposing to approve Tennessee's infrastructure SIP submission with respect to the PSD element of section 110(a)(2)(J).

Visibility protection: EPA's 2013 Guidance notes that it does not treat the visibility protection aspects of section 110(a)(2)(J) as applicable for purposes of the infrastructure SIP approval process. EPA recognizes that states are subject to visibility protection and regional haze program requirements under part C of the Act (which includes sections 169A and 169B). However, there are no newly applicable visibility protection obligations after the promulgation of a new or revised NAAQS. Thus, EPA has determined that states do not need to address the visibility component of 110(a)(2)(J) in infrastructure SIP submittals. As such, EPA has made the preliminary determination that it does not need to address the visibility protection element of section 110(a)(2)(J) in Tennessee's infrastructure SIP submission related to the 2010 1-hour SO_2 NAAQS.

11. 110(a)(2)(K) *Air Quality Modeling and Submission of Modeling Data:* Section 110(a)(2)(K) of the CAA requires that SIPs provide for performing air quality modeling so that effects on air quality of emissions from NAAQS pollutants can be predicted and submission of such data to the EPA can be made. TAPCR 1200–03–09–01(4), *Prevention of Significant Air Quality Deterioration,* specifies when modeling and when monitoring (pre- or post-construction) must be performed and that the resulting data be made available for review to EPA. Tennessee has personnel with training and experience to conduct source-oriented dispersion modeling with models approved by EPA. Additionally, Tennessee participates in a regional effort to coordinate the development of emissions inventories and conduct regional modeling for several NAAQS, including the 2010 1-hour SO_2 NAAQS, for the Southeastern states. Taken as a whole, Tennessee's air quality regulations and practices demonstrate that TDEC has the authority to provide relevant data for the purpose of predicting the effect on ambient air quality of the 1-hour SO_2 NAAQS. EPA has made the preliminary determination that Tennessee's SIP and practices adequately demonstrate the State's ability to provide for air quality modeling, along with analysis of the associated data, related to the 2010 1-hour SO_2 NAAQS. Accordingly, EPA is proposing to approve Tennessee's infrastructure SIP submission with respect to section 110(a)(2)(K).

12. 110(a)(2)(L) *Permitting fees:* Section 110(a)(2)(L) requires the owner or operator of each major stationary source to pay to the permitting authority, as a condition of any permit required under the CAA, a fee sufficient to cover (i) the reasonable costs of reviewing and acting upon any application for such a permit, and (ii) if the owner or operator receives a permit for such source, the reasonable costs of implementing and enforcing the terms and conditions of any such permit (not including any court costs or other costs associated with any enforcement action), until such fee requirement is superseded with respect to such sources by the Administrator's approval of a fee program under title V.

In Tennessee, funding for review of PSD and NNSR permits comes from permit-specific fees that are charged to new applicants and from annual emission fees charged to existing title V emission sources that are applying for major modifications under PSD or

NNSR. The cost of reviewing, approving, implementing, and enforcing PSD and major NNSR permits are covered under the following State regulations: (1) TAPCR 1200–03–26–02(5) requires each new major stationary source to pay a construction permit application filing/processing fee and (2) TAPCR 1200–03–26–02(9), *Annual Emission Fees for Major Sources,*[23] mandates that existing major stationary sources pay annual title V emission fees, which are used to cover the permitting costs for any new construction or modifications at these facilities as well as implementation and enforcement of PSD and NNSR permits after they have been issued. EPA has made the preliminary determination that Tennessee adequately provides for permitting fees related to the 2010 1-hour SO_2 NAAQS when necessary. Accordingly, EPA is proposing to approve Tennessee's infrastructure SIP submission with respect to section 110(a)(2)(L).

13. 110(a)(2)(M) *Consultation/participation by affected local entities:* Section 110(a)(2)(M) of the Act requires states to provide for consultation and participation in SIP development by local political subdivisions affected by the SIP. TCA 68–201–105, *Powers and duties of board Notification of vacancy Termination due to vacancy,* authorizes and requires the Tennessee Air Pollution Control Board to promulgate rules and regulations related to consultation under the provisions of the State's Uniform Administrative Procedures Act. TCA 4–5–202, *When hearings required,* requires agencies to precede all rulemaking with a notice and public hearing, except for exemptions. TCA 4–5–203, *Notice of hearing,* states that whenever an agency is required by law to hold a public hearing as part of its rulemaking process, the agency shall: ''(1) Transmit written notice of the hearings to the secretary of state for publication in the notice section of the administrative register Web site . . . and (2) Take such other steps as it deems necessary to convey effective notice to persons who are likely to have an interest in the proposed rulemaking.'' TCA 68–201–105(b)(7) authorizes and requires TDEC to ''encourage voluntary cooperation of affected persons or groups in preserving and restoring a reasonable degree of air purity; advise, consult and cooperate with other agencies, persons or groups in matters pertaining to air pollution; and encourage authorized air pollution agencies of political subdivisions to handle air pollution problems within their respective jurisdictions to the greatest extent possible and to provide technical assistance to political subdivisions . . .''. TAPCR 1200–03–34, *Conformity,* requires interagency consultation on transportation and general conformity issues. Additionally, TDEC has, in practice, consulted with local entities for the development of its transportation conformity SIP and has worked with the Federal Land Managers as a requirement of EPA's regional haze rule. EPA has made the preliminary determination that Tennessee's SIP and practices adequately demonstrate consultation with affected local entities related to the 2010 1-hour SO_2 NAAQS. Accordingly, EPA is proposing to approve Tennessee's infrastructure SIP submission with respect to section 110(a)(2)(M).

[23] Title V program regulations are federally-approved but not incorporated into the federally-approved SIP.

V. Proposed Action

With the exception of interstate transport provisions pertaining to the contribution to nonattainment or interference with maintenance in other states and visibility protection requirements of section 110(a)(2)(D)(i)(I) and (II) (prongs 1, 2, and 4), EPA is proposing to approve Tennessee's infrastructure submission submitted on March 13, 2014, for the 2010 1-hour SO_2 NAAQS for the above described infrastructure SIP requirements. EPA is proposing to approve Tennessee's infrastructure SIP submission for the 2010 1-hour SO_2 NAAQS because the submission is consistent with section 110 of the CAA.

VI. Statutory and Executive Order Reviews

Under the CAA, the Administrator is required to approve a SIP submission that complies with the provisions of the Act and applicable Federal regulations. *See* 42 U.S.C. 7410(k); 40 CFR 52.02(a). Thus, in reviewing SIP submissions, EPA's role is to approve state choices, provided that they meet the criteria of the CAA. Accordingly, this proposed action merely approves state law as meeting Federal requirements and does not impose additional requirements beyond those imposed by state law. For that reason, this proposed action:

- Is not a significant regulatory action subject to review by the Office of Management and Budget under Executive Orders 12866 (58 FR 51735, October 4, 1993) and 13563 (76 FR 3821, January 21, 2011);
- Does not impose an information collection burden under the provisions of the Paperwork Reduction Act (44 U.S.C. 3501 *et seq.*);
- Is certified as not having a significant economic impact on a substantial number of small entities under the Regulatory Flexibility Act (5 U.S.C. 601 *et seq.*);
- Does not contain any unfunded mandate or significantly or uniquely affect small governments, as described in the Unfunded Mandates Reform Act of 1995 (Pub. L. 104–4);
- Does not have Federalism implications as specified in Executive Order 13132 (64 FR 43255, August 10, 1999);
- Is not an economically significant regulatory action based on health or safety risks subject to Executive Order 13045 (62 FR 19885, April 23, 1997);
- Is not a significant regulatory action subject to Executive Order 13211 (66 FR 28355, May 22, 2001);
- Is not subject to requirements of Section 12(d) of the National Technology Transfer and Advancement Act of 1995 (15 U.S.C. 272 note) because application of those requirements would be inconsistent with the CAA; and
- Does not provide EPA with the discretionary authority to address, as appropriate, disproportionate human health or environmental effects, using practicable and legally permissible methods, under Executive Order 12898 (59 FR 7629, February 16, 1994).

In addition, the SIP is not approved to apply on any Indian reservation land or in any other area where EPA or an Indian tribe has demonstrated that a tribe has jurisdiction. In those areas of Indian country, the rule does not have tribal implications as specified by Executive Order 13175 (65 FR 67249, November 9, 2000), nor will it impose substantial direct costs on tribal governments or preempt tribal law.

List of Subjects in 40 CFR Part 52

Environmental protection, Air pollution control, Incorporation by reference, Intergovernmental relations, Nitrogen dioxide, Ozone, Reporting and recordkeeping requirements, Volatile organic compounds.

Authority: 42 U.S.C. 7401 *et seq.*

Dated: February 23, 2016.

Heather McTeer Toney,

Regional Administrator, Region 4.

[FR Doc. 2016–05160 Filed 3–9–16; 8:45 am]

BILLING CODE 6560–50–P

ENVIRONMENTAL PROTECTION AGENCY

40 CFR Part 52

[EPA–R06–OAR–2014–0642; FRL–9943–42–Region 6]

Approval and Promulgation of Air Quality Implementation Plans; New Mexico; and Albuquerque/Bernalillo County; Revisions To Establish Small Business Stationary Source Technical and Environmental Compliance Assistance Programs

AGENCY: Environmental Protection Agency (EPA).

ACTION: Proposed rule.

SUMMARY: The Environmental Protection Agency (EPA) is proposing to approve revisions to the New Mexico State Implementation Plan (SIP) for both the State and Albuquerque/Bernalillo County. These proposed revisions establish Small Business Stationary Assistance Source Technical and Environmental Compliance Assistance Programs. The EPA is proposing to approve these revisions pursuant to sections 110 and 507(a) of the Clean Air Act (CAA).

DATES: Written comments should be received on or before April 11, 2016.

ADDRESSES: Comments may be submitted by following the detailed instructions in the **ADDRESSES** section of the direct final rule located in the rules section of this **Federal Register**.

FOR FURTHER INFORMATION CONTACT: Mr. John Walser, (214) 665–7128, *walser.john@epa.gov.*

SUPPLEMENTARY INFORMATION: In the Rules and Regulations section of this **Federal Register**, the EPA is approving the State's SIP submittal as a direct rule without prior proposal because the Agency views this as a noncontroversial submittal and anticipates no adverse comments. A detailed rationale for the approval is set forth in the direct final rule. If no relevant adverse comments are received in response to this action, no further activity is contemplated. If the EPA receives relevant adverse comments, the direct final rule will be withdrawn and all public comments received will be addressed in a subsequent final rule based on this proposed rule. The EPA will not institute a second comment period. Any parties interested in commenting on this action should do so at this time.

For additional information, see the direct final rule which is located in the Rules and Regulations section of this **Federal Register**.

Dated: February 24, 2016.

Ron Curry,

Regional Administrator, Region 6.

[FR Doc. 2016–05161 Filed 3–9–16; 8:45 am]

BILLING CODE 6560–50–P

ENVIRONMENTAL PROTECTION AGENCY

40 CFR Part 52

[EPA–R09–OAR–2015–0819; FRL–9943–47–Region 9]

Revisions to the California State Implementation Plan; South Coast Air Quality Management District; Control of Oxides of Nitrogen Emissions From Off-Road Diesel Vehicles

AGENCY: Environmental Protection Agency (EPA).

ACTION: Proposed rule.

SUMMARY: The Environmental Protection Agency (EPA) is proposing to approve South Coast Air Quality Management District's (SCAQMD or District) Rule 2449, Control of Oxides of Nitrogen Emissions from Off-Road Diesel Vehicles, which adopts by reference title 13, chapter 9, section 2449.2 of the California Code of Regulations (CCR), ''Surplus Off-Road Opt-In for NO_X (SOON) Program,'' as part of the SCAQMD portion of the California State Implementation Plan (SIP). SCAQMD Rule 2449 requires certain in-use off-road vehicle fleets to meet more stringent requirements in the South Coast area when funding is provided by the District in order to achieve additional reductions of oxides of Nitrogen (NO_X). We are taking comments on this proposal and plan to follow with a final action.

DATES: Any comments must arrive by April 11, 2016.

ADDRESSES: Submit your comments, identified by Docket ID No. EPA–R09–OAR–2015–0819 at *http://www.regulations.gov,* or via email to *lo.doris@epa.gov.* For comments submitted at Regulations.gov, follow the online instructions for submitting comments. Once submitted, comments cannot be edited or removed from Regulations.gov. For either manner of submission, the EPA may publish any comment received to its public docket. Do not submit electronically any information you consider to be Confidential Business Information (CBI) or other information whose disclosure is restricted by statute. Multimedia submissions (audio, video, etc.) must be accompanied by a written comment. The written comment is considered the official comment and should include discussion of all points you wish to make. The EPA will generally not consider comments or comment contents located outside of the primary submission (*i.e.* on the web, cloud, or other file sharing system). For additional submission methods, please contact the person identified in the **FOR FURTHER INFORMATION CONTACT** section. For the full EPA public comment policy, information about CBI or multimedia submissions, and general guidance on making effective comments, please visit *http://www2.epa.gov/dockets/commenting-epa-dockets.*

FOR FURTHER INFORMATION CONTACT: Doris Lo, EPA Region IX, (415) 972–3959, *lo.doris@epa.gov.*

SUPPLEMENTARY INFORMATION: Throughout this document, ''we,'' ''us'' and ''our'' refer to the EPA.

Table of Contents

I. Background
II. The State's Submittal
A. What rule did the State submit?
B. Are there other versions of the rule?
C. What is the purpose of the submitted rule?
D. What do the Off-Road Regulation and Rule 2449 require?
III. The EPA's Evaluation of the State's Submittal
A. How is the EPA evaluating the rule?
B. Does Rule 2449 meet CAA SIP evaluation criteria?
1. Did the SCAQMD and CARB provide adequate public notice and comment periods?
2. Do the SCAQMD and CARB have adequate legal authority to implement the rule?
3. Is the rule enforceable as required under CAA section 110(a)(2)?
4. Does the rule interfere with reasonable further progress and attainment or any other applicable requirement of the Act?
5. Will the State and the SCAQMD have adequate personnel and funding for the rule?
6. Does the rule meet the RACM and BACM requirements under CAA sections 172(c)(1) and 189?
7. The EPA's Rule Evaluation Conclusion
IV. Proposed Action and Public Comment
V. Incorporation by Reference
VI. Statutory and Executive Order Reviews

I. Background

The California Air Resources Board's (CARB) Off-Road Diesel-Fueled Fleets Regulation (13 CCR sections 2449, 2449.1 and 2449.2) applies to fleets with nonroad [1] compression-ignition vehicles and equipment greater than 25 horsepower (hp). Sections 2449 and 2449.1 (collectively the ''Off-Road

[1] The Clean Air Act refers to these engines as ''nonroad'' engines and the State of California uses the term ''off-road'' engines. The terms ''nonroad'' and ''off-road'' are used interchangeably in this rule.

Regulation'') require fleet operators to meet a progressively more stringent combined particulate matter (PM) and NO_X standard, or to reduce emissions through technology upgrades such as retrofit or replacement. The Off-Road Regulation was initially approved by CARB on July 26, 2007 and was subsequently amended in December 2010.

In conjunction with the Off-Road Regulation, CARB also adopted an ''opt-in'' provision that allows local air districts to achieve additional reductions of NO_X emissions by introducing cleaner engines or control devices into a fleet with incentive funding (see 13 CCR section 2449.2, Surplus Off-Road Opt-In for NO_X Program (also referred to as the ''CARB SOON Program'' in today's proposed rule)). Under this provision, any California air district can ''opt-in'' to the CARB SOON Program to achieve reductions of NO_X emissions from in-use nonroad diesel-fueled vehicles that are surplus to what is required by CARB's Off-Road Regulation. In order to participate in the CARB SOON Program, a district's governing board must hold a public hearing, vote to ''opt-in'' to the CARB SOON Program, and decide whether to make the program voluntary or mandatory.

On May 2, 2008 the SCAQMD governing board held a public hearing at which it voted to ''opt-in'' to the CARB SOON Program as a mandatory requirement and adopted Rule 2449, Control of Oxides of Nitrogen Emissions from Off-Road Diesel Vehicles, which includes by reference the CARB SOON Program. The SCAQMD also adopted additional Rule 2449 Administrative Guidelines (May 2008) as required by the CARB SOON Program to implement the program in the South Coast area. On July 11, 2014, the SCAQMD amended Rule 2449 to update the rule's reference to the CARB SOON Program, which was amended by CARB in December 2011. The SCAQMD Rule 2449 adopts the provisions of the CARB SOON Program found under 13 CCR, section 2449.2 into the SCAQMD's rule book and makes the CARB SOON Program a mandatory requirement for in-use off-road sources located in the South Coast area.[2]

CARB's Off-Road Regulation and the CARB SOON Program are subject to section 209(e) of the Clean Air Act (CAA or the Act), which generally preempts States from adopting and enforcing standards and other requirements relating to the control of emissions from nonroad engines (see CAA section 209(e)(1) and *Engine Mfrs. Ass'n* v. *EPA,* 88 F.3d 1075 (D.C. Cir. 1996)). However, CAA section 209(e)(2)(A) requires the EPA to authorize California to adopt and enforce standards and other requirements relating to the control of emissions from certain nonroad vehicles or engines, unless the EPA makes one of three enumerated findings. On September 20, 2013 the EPA authorized CARB to enforce the Off-Road Regulation and the CARB SOON Program (collectively ''Fleet Requirements'') (see 78 FR 58090–58121, September 20, 2013).

On November 12, 2015, the EPA proposed to approve the Fleet Requirements into the California SIP (see 80 FR 69915).[3]

II. The State's Submittal

A. What rule did the State submit?

On July 18, 2008, the State of California submitted SCAQMD Rule 2449, ''Control of Oxides of Nitrogen Emissions from Off-Road Vehicles,'' which was adopted by the District on May 2, 2008 (see July 18, 2008 letter from Michael H. Scheible, Deputy Executive Officer, CARB, to Wayne Nastri, Regional Administrator, EPA Region 9, with attachments).

On September 5, 2014, the state submitted a revision to Rule 2449 adopted by the District on July 11, 2014. The submittal made a minor administrative revision to the numbering of the referenced CARB SOON Program, which was revised by CARB in December 2011, from section 2449.3 to section 2449.2 (see September 5, 2014 letter to Jared Blumenfeld, Regional Administrator, EPA Region 9, from Richard W. Corey, Executive Officer, Air Resources Board with attachments).

The July 18, 2008 submittal was deemed complete by operation of law under CAA section 110(k)(1)(B) on January 18, 2009. The September 5, 2014 submittal was deemed complete by operation of law under CAA section 110(k)(1)(B) on March 5, 2015.

B. Are there other versions of the rule?

There are no previous versions of Rule 2449 in the SIP for the SCAQMD.

C. What is the purpose of the submitted rule?

NO_X helps produce ground-level ozone, smog and fine particulate matter ($PM_{2.5}$), which harm human health and the environment. Section 110(a) of the CAA requires States to submit regulations that control NO_X emissions. In addition, section 172(c)(1) of the Act requires implementation of all reasonably available control measures (RACM) as expeditiously as practicable in nonattainment areas. Because the South Coast area is designated nonattainment for the 1-hour ozone standard, the 1997 annual and 24-hour $PM_{2.5}$ standard, the 2006 24-hour $PM_{2.5}$ standard, the 2012 annual $PM_{2.5}$ standard, the 1997 8-hour ozone standard and the 2008 8-hour ozone standard (see 40 CFR part 81.305), CARB and the SCAQMD must implement RACM for NO_X (among other pollutants) under CAA section 172(c)(1). In addition, under subpart 4 of the CAA, serious $PM_{2.5}$ areas are required to adopt best available control measures (BACM) for $PM_{2.5}$ and its precursors.[4] On January 13, 2016, the EPA reclassified the South Coast $PM_{2.5}$ nonattainment area as a Serious nonattainment area for the 2006 $PM_{2.5}$ NAAQS (81 FR 1514).

Off-road diesel vehicles collectively represent one of the largest sources of NO_X emissions in the South Coast Air Basin.[5] The purpose of Rule 2449 is to achieve surplus NO_X reductions from this source category beyond those required under CARB's Off-Road Regulation with funding provided by the SCAQMD. The SCAQMD's 2012 Air Quality Management Plan (AQMP) relies on NO_X reductions from Rule 2449 to attain the one-hour and 1997 eight-hour ozone NAAQS.[6] Rule 2449 is expected to achieve 7.5 tons per day (tpd) of NO_X reductions in 2023.[7]

D. What do the Off-Road Regulation and Rule 2449 require?

In general, CARB's Off-Road Regulation applies to all diesel-fueled off-road fleet equipment owners operating in the State of California. The Off-Road Regulation has performance requirements depending on the size of the fleet (*i.e.,* a large fleet is defined as a fleet having greater than 5,000 horsepower (hp), a small fleet has less

[2] Unless otherwise indicated, references in this notice to Rule 2449 include the CARB Soon Program, as implemented through Rule 2449.

[3] In particular, the EPA proposed to approve 13 CCR sections 2449 (excluding subsection 2449(d)(2)), 2449.1, and 2449.2 into the SIP. 80 FR 69918, Table 1.

[4] The EPA generally takes action on a RACM or BACM demonstration as part of our action on the State's attainment demonstration for the relevant NAAQS.

[5] See, *e.g.,* Draft Staff Report, Proposed Amended Rule 2449—Control of Oxides of Nitrogen Emissions from Off-Road Diesel Vehicles, page 1 (May 2014).

[6] See 2012 AQMP, Table 4–6, page 4–33, OFFRD–01, Extension of the SOON Provision for Construction/Industrial Equipment [NO_X] and Appendix IV–B, pages IV–B–30 thru IV–B–32.

[7] *Id.* The EPA is not proposing to approve the emission reductions in today's proposed rule. Emission reductions or SIP credit from Rule 2449 will be addressed in future EPA actions on attainment plans.

than or equal to 2,500 hp, and a medium fleet is in between) [8] and provides calculation methodologies for determining a fleet average index and a fleet average target rate. Each year, each subject fleet must demonstrate that its fleet average index was less than or equal to the applicable fleet average target rate or that it met Best Available Control Technology (BACT) requirements by performing turnover or installing verified diesel emission control strategies (VDECS).[9] As discussed above, the EPA has authorized CARB to implement the Off-Road Regulation under CAA section 209(e) (78 FR 58090) and has proposed to approve the Off-Road Regulation into the California SIP (80 FR 69915).

SCAQMD Rule 2449 focuses on the largest fleets with the oldest engines and requires these fleets to meet more stringent fleet average targets than those required by section 2449.1(a) of the Off-Road Regulation. In general, Rule 2449 applies to the owners [10] of off-road vehicles that operate within the SCAQMD and that are part of fleets with more than 40 percent Tier 0 and Tier 1 vehicles [11] (as of January 1, 2008) and with more than 20,000 horsepower (hp) in maximum power on a statewide basis (excluding the hp from engines in two-engine vehicles and the hp from single cranes formerly subject to the Cargo Handling Equipment Regulation).[12]

Once the District issues a solicitation for applications for funding under Rule 2449, subject fleet owners are required to meet the more stringent fleet average targets required by the CARB SOON Program or apply for incentive funding for a sufficient number of projects (*e.g.,* repowers, purchases, replacements) to meet the CARB SOON Program fleet average targets (reproduced in Table 1 below).[13]

TABLE 1—SOON TARGET FOR EACH MAX HP GROUP FOR USE IN CALCULATING SOON FLEET AVERAGE TARGET RATES

[g/bhp-hr]

Compliance date: Jan 1 of year	25–49 hp	50–74 hp	75–99 hp	100–174 hp	175–299 hp	300–599 hp	600–750 hp	>750 hp
2011	5.6	6.2	6.7	6.0	5.4	5.1	5.3	6.4
2014	5.8	6.5	7.1	6.4	3.9	3.7	3.7	5.3
2017	5.0	5.4	5.5	4.9	2.2	2.2	2.2	4.3
2020	4.1	4.2	3.4	3.1	1.4	1.3	1.4	3.4
2023	3.3	3.0	1.4	1.3	0.7	0.7	0.7	2.7

Source: Reproduction of Table 5 of section 2449.2(d) of CARB SOON Program. These fleet average target rates are more stringent than what is required under the Off-Road Regulation (see 13 CCR section 2449.1(a)(1), Table 3).

Specifically, subject fleet owners are required to submit a report with information on, including but not limited to, the fleet owner, vehicle types and uses of each vehicle, engines used to power the vehicles and the type and use of each engine, and VDECS installed on engines. 13 CCR section 2449.2(d)(1)(A)). Fleets must calculate their fleet average index based on the equipment they have and compare it to the fleet average target rate based on the SOON target rates shown in Table 1 above (13 CCR section 2449.2(d)(1)(B) and (C)), and if their fleet average index is greater than the SOON fleet average target rate, they are required to apply for funding (13 CCR section 2449.2(d)(1)(D)). Fleets must apply for funding in accordance with the Carl Moyer Memorial Air Quality Standards Attainment Program (Carl Moyer Program) [14] policies and procedures and also with the Administrative Guidelines [15] adopted by the SCAQMD, which provide further clarification on what to include in the funding applications and compliance plans. Funding applications and compliance plans must together demonstrate that equipment identified for the CARB SOON Program funding will result in surplus [16] reductions in order to qualify for incentive funding. Once a fleet receives funding for a qualified project, the fleet is required to implement the project. The SCAQMD has approved significant funding for the implementation of Rule 2449. The 2012 AQMP states that the District Governing Board has allocated up to $30 million per year for the program and extended the SOON Program to 2023 (see Final 2012 AQMP: Appendix IV–B, p. IV–B–31). For ''FY 2015–2016,'' or ''Year 18'' of the Carl Moyer Memorial Air Quality Standards Attainment Program, the SCAQMD expects that approximately $5 million of funding will be available for the SCAQMD SOON Program (see DRAFT Technology Committee Agenda

[8] See CARB's Off-Road Regulation, section 2449(c)(24), definition of ''Fleet size category.''

[9] See CARB's Off-Road Regulation, section 2449.1(a) Fleet Average Requirements, 2449.1(b) BACT Requirements, and Appendix A with table of ''Emission Factors by Horsepower and Year (g/bhp-hr).''

[10] Most provisions of the CARB SOON Program apply to fleets rather than fleet owners or operators (see *e.g.* sections 2449.2(b)(2) and (d)(1)). However, SCAQMD Rule 2449 makes these requirements applicable to the owners of off-road vehicles that operate in SCAQMD and meet the criteria in 13 CCR 2449.2(b)(2).

[11] See 13 CCR section 2449(c)(48) and (49) for definitions of Tier 0 and Tier 1 engines.

[12] See 13 CCR section 2449.2(b)(2), adopted by reference under SCAQMD Rule 2449.

[13] See 13 CCR section 2449.2(d). Thus, for example, the Off-Road Regulation requires ''large'' fleets to meet a fleet average target of 1.5 g/bhp-hr for 175–750 hp engines and 3.4 g/bhp-hr for greater than 750 hp engines in the year 2023, whereas Rule 2449 and the CARB SOON Program require a fleet average target of 0.7 g/bhp-hr for 175–750 hp engines and 2.7 g/bhp-hr for greater than 750 hp engines in 2023.

[14] The Carl Moyer Program funds are used to fund Rule 2449 with the requirement that all projects meet, at a minimum, the Carl Moyer Program's latest requirements and guidelines (*e.g.,* project selection criteria, co-funding requirements, and reporting and monitoring requirements). For more information on the Carl Moyer Program, see *http://www.arb.ca.gov/msprog/moyer/moyer.htm.*

[15] In addition to the Carl Moyer Program guidelines, the CARB SOON Program requires the District to adopt District guidelines, through a public process, that include additional administrative provisions necessary to implement the CARB SOON Program. These provisions include, but are not limited to, funding guidelines, compliance planning requirements and reporting and monitoring requirements. The SCAQMD adopted these additional district guidelines on May 22, 2008 (see Draft Administrative Guidelines, Proposed Rule 2449 Administrative Guidelines, SCAQMD, May 2008). The SCAQMD Board plans to consider amendments to the May 2008 Administrative Guidelines on March 4, 2016 (see DRAFT Technology Committee Agenda #1, prepared for BOARD MEETING DATE: March 4, 2016, with Attachment 4, SOON Provision Implementation Guidelines). The amendments include referencing the correct section of CARB's Off-Road Regulation and aligning funding levels for the SCAQMD SOON Program with the Carl Moyer program. If approved by the SCAQMD Board, the EPA expects the SCAQMD to forward the amendments to CARB for approval.

[16] Surplus reductions are those NO_X reductions that are not needed for meeting the requirements of the Off-Road Regulation. If surplus reductions are available and used to meet the requirements of Rule 2449 and the CARB SOON Program, then those reductions cannot be used to meet the requirements of the Off-Road Regulation until they are no longer needed for compliance with Rule 2449.

#1, prepared for BOARD MEETING DATE: March 4, 2016, page 3).

III. The EPA's Evaluation of the State's Submittal

A. How is the EPA evaluating the rule?

The EPA has evaluated Rule 2449 against the applicable procedural and substantive CAA requirements for SIPs and SIP revisions and has concluded that it meets all of the applicable requirements.

Generally, SIPs must include enforceable emission limitations and other control measures, means, or techniques, as well as schedules and timetables for compliance, as may be necessary to meet the requirements of the Act (see CAA section 110(a)(2)(A)); must provide necessary assurances that the State will have adequate personnel, funding, and authority under State law to carry out such SIP (and is not prohibited by any provision of Federal to State law from carrying out such SIP) (see CAA section 110(a)(2)(E)); must be adopted by a State after reasonable notice and public hearing (see CAA section 110(l)), and must not interfere with any applicable requirement concerning attainment and reasonable further progress, or any other applicable requirement of the Act (see CAA section 110(l)).[17]

In addition, as noted above, CARB and the SCAQMD must implement RACM for NO_X (among other pollutants) under CAA section 172(c)(1).

B. Does Rule 2449 meet CAA SIP evaluation criteria?

1. Did the SCAQMD and CARB provide adequate public notice and comment periods?

Under CAA section 110(l), SIP revisions must be adopted by the State, and the State must provide for reasonable public notice and hearing prior to adoption. In 40 CFR 51.102(d), we specify that reasonable public notice in this context refers to at least 30 days. The State has submitted evidence of public notice and hearing prior to the May 5, 2008 adoption and July 11, 2014 amendment of Rule 2449 by the SCAQMD (see attachments to July 18, 2008 letter to Mr. Wayne Nastri, EPA Region 9 from Michael H. Scheible, Air Resource Board and attachments to September 5, 2014 letter to Mr. Jared Blumenfeld, EPA Region 9, from Richard W. Corey, Air Resources Board). Based on the evidence provided by the SCAQMD and CARB, we conclude that they have provided adequate public notice and comment periods.

2. Do the SCAQMD and CARB have adequate legal authority to implement the rule?

California air districts are authorized to adopt and enforce rules by California Health and Safety Code (H&SC) section 40001. CARB is authorized to adopt the rules as revisions to the SIP by H&SC section 39601, 39602, and 41650 through 41652 (see CARB Executive Order S–14–012).

In addition, we note that California H&SC sections 43013(a) and 43018 provide CARB with broad authority to achieve the maximum feasible and cost-effective emission reductions from all mobile source categories, including both on-road and off-road diesel engines.

As discussed above, CARB's Off-Road Regulation is subject to CAA section 209(e), and on September 20, 2013 the EPA granted CARB's request for authorization to enforce its Fleet Requirements, including the CARB SOON Program (see 78 FR 58090–58121, September 20, 2013). Thus, we find that the SCAQMD and CARB have adequate legal authority to adopt and implement Rule 2449.

3. Is the rule enforceable as required under CAA section 110(a)(2)?

We have evaluated the enforceability of Rule 2449 and the CARB SOON Program with respect to applicability and exemptions; standard of conduct and compliance dates; sunset provisions; discretionary provisions; and test methods, recordkeeping and reporting,[18] and have concluded for the reasons given below that the rule is enforceable for the purposes of CAA section 110(a)(2).

First, with respect to applicability, we find Rule 2449 and the CARB SOON Program to be sufficiently clear as to which fleet owners and which vehicles or engines are subject to the program and the rule (see Rule 2449 and 13 CCR section 2449.2(b)). In general, the rule applies to owners of vehicles that operate within the SCAQMD and are part of a fleet consisting of 40 percent Tier 0 and Tier 1 vehicles with greater than 20,000 hp statewide, excluding the hp from engines in two-engine vehicles and single engine cranes formerly subject to the Cargo Handling Equipment Regulation (see 13 CCR 2449.2(b)(2)).

Second, we find that Rule 2449 and the CARB SOON Program are sufficiently specific so that the persons affected are fairly on notice as to what the requirements and related compliance dates are. We have described the substantive requirements and compliance dates set forth in Rule 2449 in section II.D. of today's proposed rule.

Third, the requirements of Rule 2449 will sunset at different times from 2011 through 2023, depending on when the SCAQMD issues its solicitations for funding; however, once a fleet is no longer subject to Rule 2449, it will be then be subject to the requirements of the Off-Road Regulation.

Fourth, Rule 2449 contains a provision that allows for discretion on the part of CARB's Executive Officer (EO), this provision is limited both in scope and application, and is no longer relevant since the date to request discretion has passed (see 13 CCR section 2449.2(e)(2), allowing a fleet to apply to the EO for an extension from the requirements if the rule calculations would require a fleet to turn over Tier 2 or better engines before January 1, 2014). As such, we find that this provision does not undermine the enforceability of Rule 2449 or preclude its approval into the SIP.

Lastly, Rule 2449 identifies appropriate calculation requirements and includes adequate recordkeeping and reporting requirements sufficient to ensure compliance with the applicable requirements. In particular, as described above, once the SCAQMD issues a solicitation, each subject fleet owner must submit a report containing detailed information about each vehicle and engine in the fleet, each VDECS installed on an engine in the fleet, and other information related to compliance with the Off-Road Rule (see 13 CCR 2449(d)(1)(A) and 2449(g). If the fleet average index is greater than the SOON fleet average target rate, the fleet owner must apply for SOON funding (13 CCR 2449.2(d)(1)(B)). If the necessary NO_X retrofits, repower, or vehicle replacements are available, the application must indicate how these retrofits, repowers, or vehicle replacements would bring the fleet average index for vehicles that operate within the SCAQMD to less than or equal to the SOON fleet average target rate (13 CCR 2449.2(d)(1)(D)). In addition, the fleet owner must prepare and submit a compliance plan laying out the actions it is required to take

[17] CAA section 193, which prohibits any pre-1990 SIP control requirement relating to nonattainment pollutants in nonattainment areas from being modified unless the SIP is revised to insure equivalent or greater emission reductions of such air pollutants, does not apply to this rule because it does not include any pre-1990 SIP control requirements.

[18] These concepts are discussed in detail in an EPA memorandum from J. Craig Potter, EPA Assistant Administrator for Air and Radiation, *et al.,* titled ''Review of State Implementation Plans and Revisions for Enforceability and Legal Sufficiency,'' dated September 23, 1987.

under section 2449.1 and the actions for which it is applying to the SCAQMD for funding under section 2449.2 (13 CCR 2449.2(e)(3)).

4. Does the rule interfere with reasonable further progress and attainment or any other applicable requirement of the Act?

As discussed above, the SCAQMD's 2012 AQMP relies on NO_X reductions from Rule 2449 to attain the one-hour and 1997 eight-hour ozone NAAQS. The EPA has approved SCAQMD's commitment to implement the SOON Program as part of the SCAQMD's aggregate NO_X emissions reductions commitment (see 79 FR 29712, 29720 and 29721). Approval of Rule 2449 into the SIP will help fulfill this commitment. Thus, the EPA believes that approval of Rule 2449 does not interfere with Reasonable Further Progress, attainment or any other applicable requirement of the Act.

5. Will the State and the SCAQMD have adequate personnel and funding for the rule?

As discussed above, the SCAQMD has approved significant funding for the implementation of Rule 2449. The 2012 AQMP states that the SCAQMD Board has allocated up to $30 million per year for the program and extended the SOON Program to 2023 (see Final 2012 AQMP: Appendix IV–B, p. IV–B–31). For ''FY 2015–2016,'' or ''Year 18'' of the Carl Moyer Memorial Air Quality Standards Attainment Program, the SCAQMD expects to have approximately $5 million of funding available for the SCAQMD SOON Program (see DRAFT Technology Committee Agenda #1, prepared for BOARD MEETING DATE: March 4, 2016, page 3).

6. Does the rule meet the RACM and BACM requirements under CAA sections 172(c)(1) and 189?

Rule 2449 provides for the most stringent in-use off-road diesel equipment requirements that we are aware of in the United States, and thus, we find that the rule implements both reasonably available and best available control measures for this source category. However, as discussed above, the EPA generally takes action on a RACM or BACM demonstration as part of our action on the State's attainment demonstration for the relevant NAAQS. Thus, while we do not know of any more stringent requirements for this category at this time, we are also not taking any action on how this measure fits within the context of a RACM or BACM demonstration for the South Coast area.

7. The EPA's Rule Evaluation Conclusion

Based on the above discussion, we believe Rule 2449 and the CARB SOON Program are consistent with the relevant CAA requirements, policies and guidance.

IV. Proposed Action and Public Comment

As authorized in section 110(k)(3) of the Act, the EPA is proposing to fully approve the submitted rule because we believe it fulfills all relevant requirements. We will accept comments from the public on this proposal until April 11, 2016. Unless we receive convincing new information during the comment period, we intend to publish a final approval action that will incorporate this rule into the federally enforceable SIP.

V. Incorporation by Reference

In this rule, the EPA is proposing to include in a final EPA rule regulatory text that includes incorporation by reference. In accordance with requirements of 1 CFR 51.5, the EPA is proposing to incorporate by reference SCAQMD Rule 2449. The EPA has made, and will continue to make, this document available electronically through *www.regulations.gov* and in hard copy at the appropriate EPA office (see the **ADDRESSES** section of this preamble for more information).

VI. Statutory and Executive Order Reviews

Under the CAA, the Administrator is required to approve a SIP submission that complies with the provisions of the Act and applicable Federal regulations. 42 U.S.C. 7410(k); 40 CFR 52.02(a). Thus, in reviewing SIP submissions, the EPA's role is to approve State choices, provided that they meet the criteria of the Act. Accordingly, this proposed action merely proposes to approve State law as meeting Federal requirements and does not impose additional requirements beyond those imposed by State law. For that reason, this proposed action:

- Is not a ''significant regulatory action'' subject to review by the Office of Management and Budget under Executive Order 12866 (58 FR 51735, October 4, 1993);
- does not impose an information collection burden under the provisions of the Paperwork Reduction Act (44 U.S.C. 3501 *et seq.*);
- is certified as not having a significant economic impact on a substantial number of small entities under the Regulatory Flexibility Act (5 U.S.C. 601 *et seq.*);
- does not contain any unfunded mandate or significantly or uniquely affect small governments, as described in the Unfunded Mandates Reform Act of 1995 (Pub. L. 104–4);
- does not have Federalism implications as specified in Executive Order 13132 (64 FR 43255, August 10, 1999);
- is not an economically significant regulatory action based on health or safety risks subject to Executive Order 13045 (62 FR 19885, April 23, 1997);
- is not a significant regulatory action subject to Executive Order 13211 (66 FR 28355, May 22, 2001);
- is not subject to requirements of Section 12(d) of the National Technology Transfer and Advancement Act of 1995 (15 U.S.C. 272 note) because application of those requirements would be inconsistent with the CAA; and
- does not provide the EPA with the discretionary authority to address disproportionate human health or environmental effects with practical, appropriate, and legally permissible methods under Executive Order 12898 (59 FR 7629, February 16, 1994).

In addition, the SIP is not approved to apply on any Indian reservation land or in any other area where the EPA or an Indian tribe has demonstrated that a tribe has jurisdiction. In those areas of Indian country, the rule does not have tribal implications and will not impose substantial direct costs on tribal governments or preempt tribal law as specified by Executive Order 13175 (65 FR 67249, November 9, 2000).

List of Subjects in 40 CFR Part 52

Environmental protection, Air pollution control, Incorporation by reference, Intergovernmental relations, Nitrogen dioxide, Ozone, Particulate matter, Reporting and recordkeeping requirements.

Authority: 42 U.S.C. 7401 *et seq.*

Dated: February 25, 2016.

Jared Blumenfeld,

Regional Administrator, Region IX.

[FR Doc. 2016–05278 Filed 3–9–16; 8:45 am]

BILLING CODE 6560–50–P

DEPARTMENT OF TRANSPORTATION

Federal Motor Carrier Safety Administration

49 CFR Part 391

Federal Railroad Administration

49 CFR Parts 240 and 242

[Docket Numbers FMCSA–2015–0419 and FRA–2015–0111]

RIN 2126–AB88 and 2130–AC52

Evaluation of Safety Sensitive Personnel for Moderate-to-Severe Obstructive Sleep Apnea

ACTION: Advance notice of proposed rulemaking; request for public comments.

SUMMARY: The Federal Motor Carrier Safety Administration (FMCSA) and Federal Railroad Administration (FRA) request data and information concerning the prevalence of moderate-to-severe obstructive sleep apnea (OSA) among individuals occupying safety sensitive positions in highway and rail transportation, and on its potential consequences for the safety of rail and highway transportation. FMCSA and FRA (collectively ''the Agencies'') also request information on potential costs and benefits from regulatory actions that address the safety risks associated with motor carrier and rail transportation workers in safety sensitive positions who have OSA. For instance, the agencies request comment on the costs and benefits of requiring motor carrier and rail transportation workers in safety sensitive positions who exhibit multiple risk factors for OSA to undergo evaluation and treatment by a healthcare professional with expertise in sleep disorders.

DATES: You must submit comments on or before June 8, 2016.

ADDRESSES: You may submit comments identified by either of the docket numbers listed at the beginning of this notice using any one of the following methods:

Federal Rulemaking Portal: www.regulations.gov.

Fax: 202–493–2251.

Mail: Docket Services (M–30), U.S. Department of Transportation, West Building Ground Floor, Room W12–140, 1200 New Jersey Avenue SE., Washington, DC 20590–0001.

Hand delivery: Same as mail address above, between 9 a.m. and 5 p.m., Monday through Friday, except Federal holidays. The telephone number is 202–366–9329.

To avoid duplication, please use only one of these four methods. See the ''Public Participation and Request for Comments'' heading under the **SUPPLEMENTARY INFORMATION** section below for instructions regarding submitting comments.

FOR FURTHER INFORMATION CONTACT:

FMCSA: Ms. Christine Hydock, Chief of the Medical Programs Division, FMCSA, 1200 New Jersey Ave. SE., Washington DC 20590–0001, by telephone at 202–366–4001, or by email at *fmcsamedical@dot.gov.*

FRA: Dr. Bernard Arseneau, Medical Director, Assurance and Compliance, FRA, 1200 New Jersey Avenue SE., Washington, DC 20590, by telephone at 202–493–6232, or by email at *Bernard.arseneau@dot.gov.*

If you have questions about viewing or submitting material to the docket, call Ms. Cheryl Collins, Dockets Manager, Docket Services, telephone 202–493–0402.

SUPPLEMENTARY INFORMATION:

Public Participation and Request for Comments

The Department encourages the public to participate in this advance notice of proposed rulemaking (ANPRM), by submitting comments and related materials to the appropriate dockets. Where possible, the Department would like the public to provide scientific peer-reviewed data to support comments.

Submitting Comments

If you submit a comment, please include the docket number for this ANPRM (FMCSA–2015–0419 and FRA–2015–0111), indicate the heading of the specific section of this document to which each comment applies, and provide a reason for each suggestion or recommendation. You may submit your comments and material online, by fax, mail, or hand delivery, but please use only one of these means. The Department recommends that you include your name and a mailing address, an email address, or a phone number in the body of your document so an Agency can contact you if it has questions regarding your submission.

To submit your comment online, go to *www.regulations.gov,* type the docket number, ''FMCSA–2015–0419'' or ''FRA–2015–0111 in the ''Keyword'' box, and click ''Search.'' When the new screen appears, click the ''Comment Now!'' button and type your comment into the text box in the following screen. Choose whether you are submitting your comment as an individual or on behalf of a third party and then submit. If you submit your comments by mail or hand delivery, submit them in an unbound format, no larger than 8½ by 11 inches, suitable for copying and electronic filing. The Agencies will consider all comments and material received during the comment period and will use them to inform any future rulemaking proposals.

Viewing Comments and Documents

To view comments and any document mentioned in this preamble, go to *www.regulations.gov,* insert the docket number, ''FMCSA–2015–0419'' or ''FRA–2015–0111'' in the ''Keyword'' box, and click ''Search.'' Next, click the ''Open Docket Folder'' button and choose the document listed to review. If you do not have access to the Internet, you may view the docket online by visiting the Docket Services in Room W12–140 on the ground floor of the DOT West Building, 1200 New Jersey Avenue SE., Washington, DC 20590, between 9 a.m. and 5 p.m. ET, Monday through Friday, except Federal holidays.

Privacy Act

Under 5 U.S.C. 553(c), DOT solicits comments from the public to better inform its potential rulemaking process. DOT posts these comments, without edit, including any personal information the commenter provides, to *www.regulations.gov,* as described in the system of records notice (DOT/ALL–14 FDMS), which can be reviewed at *www.dot.gov/privacy.*

Legal Basis for the Rulemaking

Federal Motor Carrier Safety Administration

FMCSA has authority under 49 U.S.C. 31136(a) and 31502(b)—delegated to the Agency by 49 CFR 1.87(f) and (i), respectively—to establish minimum qualifications, including medical and physical qualifications, for commercial motor vehicle (CMV) drivers operating in interstate commerce. Section 31136(a)(3) requires that FMCSA's safety regulations ensure that the physical conditions of CMV drivers enable them to operate their vehicles safely, and that medical examiners (MEs) trained in physical and medical examination standards perform the physical examinations required of such operators.

In 2005, Congress authorized FMCSA to establish a Medical Review Board (MRB) composed of experts ''in a variety of medical specialties relevant to the driver fitness requirements'' to provide advice and recommendations on qualification standards. 49 U.S.C. 31149(a). The position of FMCSA Chief

Medical Examiner was authorized at the same time. 49 U.S.C. 31149(b). Under section 31149(c)(1), FMCSA, with the advice of the MRB and Chief Medical Examiner, is directed to ''establish, review and revise . . . medical standards for operators of commercial motor vehicles that will ensure that the physical condition of operators of commercial motor vehicles is adequate to enable them to operate the vehicles safely.'' As discussed below, FMCSA, in conjunction with the Chief Medical Examiner, asked the MRB to review and report specifically on OSA. The MRB's recommendations are described in the *MRB and Motor Carrier Safety Advisory Committee (MCSAC) Recommendations* section of this ANPRM.

Federal Railroad Administration

Under 49 U.S.C. 20103, the Secretary of Transportation (Secretary) has broad authority to issue regulations governing every area of railroad safety. The Secretary has delegated rulemaking responsibility under section 20103 to the Administrator of FRA. 49 CFR 1.89(a). The railroad incidents discussed below illustrate the risks to railroad safety posed by railroad employees that have moderate-to-severe OSA. Moreover, FRA has exercised this safety authority to require other medical testing. FRA regulations require locomotive engineers (49 CFR 240.121) and conductors (49 CFR 242.117) to undergo vision and hearing testing as part of their qualification and certification at least every 3 years. There are individual medical circumstances that may lead a railroad to require some engineers or conductors to undergo more frequent testing. In addition, Congress has authorized the Secretary to consider requiring certification of the following other crafts and classes of employees: (1) Car repair and maintenance employees; (2) onboard service workers; (3) rail welders; (4) dispatchers; (5) signal repair and maintenance employees; and (6) any other craft or class of employees that the Secretary determines appropriate. Therefore, the Secretary, and the FRA Administrator by delegation, has statutory authority to issue regulations to address the safety risks posed by employees in safety sensitive positions with OSA.

Background

What is obstructive sleep apnea?

OSA is a respiratory disorder characterized by a reduction or cessation of breathing during sleep. OSA is characterized by repeated episodes of upper airway collapse in the region of the upper throat (pharynx) that results in intermittent periods of partial airflow obstruction (hypopneas), complete airflow obstruction (apneas), and respiratory effort-related arousals from sleep (RERAs) in which affected individuals awaken partially and may experience gasping and choking as they struggle to breathe. Risk factors for developing OSA include: Obesity, male gender, advancing age, family history of OSA, large neck size, and an anatomically small oropharynx (throat). Additionally, OSA is associated with increased risk for other adverse health conditions such as: Hypertension (high blood pressure), diabetes, obesity, cardiac dysrhythmias (irregular heartbeat), myocardial infarction (heart attack), stroke, and sudden cardiac death.

Individuals who have undiagnosed OSA are often unaware they have experienced periods of sleep interrupted by breathing difficulties (apneas, hypopneas, or RERAs) when they awaken in the morning. As a result, the condition is often unrecognized by affected individuals and underdiagnosed by medical professionals.

What are the safety risks in transportation?

For individuals with OSA, eight hours of sleep can be less restful or refreshing than four hours of ordinary, uninterrupted sleep.[1] Undiagnosed or inadequately treated moderate to severe OSA can cause unintended sleep episodes and resulting deficits in attention, concentration, situational awareness, and memory, thus reducing the capacity to safely respond to hazards when performing safety sensitive duties. Thus, OSA is a critical safety issue that can affect operations in all modes of travel in the transportation industry.

The following paragraphs provide some examples of accidents where the National Transportation Safety Board (NTSB) determined that OSA played a role in causing an accident (or near-accident) involving motor carriers and trains.

Work Zone Collision, Jackson, Tennessee

On July 26, 2000, the driver of a tractor-trailer traveling on Interstate 40 near Jackson, Tennessee, collided with a Tennessee Highway Patrol vehicle trailing construction vehicles, killing the state trooper inside. The tractor-trailer then traveled across the median and collided with a Chevrolet Blazer heading in the opposite direction, seriously injuring the driver of the Blazer. The tractor-trailer driver was 5 feet, 11 inches tall, weighed 358 pounds, and had been diagnosed with and undergone surgery for OSA, but had not indicated either the diagnosis or the surgery on examinations for medical certification. The NTSB found that the driver's unreported OSA, untreated hypothyroidism, or complications from either or both conditions predisposed him to impairment or incapacitation, including falling asleep at the wheel while driving. The NTSB determined the probable cause of the accident was the driver's incapacitation, which resulted from the failure of the medical certification process to detect and remove a medically unfit driver from service.[2]

BNSF Railway Collision, Red Oak, Iowa

On April 17, 2011, at approximately 6:55 a.m. CDT, an eastbound BNSF Railway (BNSF) coal train traveling near Red Oak, Iowa collided with the rear end of a standing BNSF maintenance-of-way equipment train. The collision resulted in the derailment of two locomotives and 12 cars, a diesel fuel fire, and the deaths of both crewmembers on the striking train. In its investigative report, the NTSB noted that neither of the fatally injured train crewmembers had undergone a sleep study prior to the incident. However, in each case, medical records indicated that both crewmembers had multiple risk factors for OSA.[3] NTSB determined that the probable cause of the accident was ''the failure of the crew of the striking train to comply with the signal indication requiring them to operate in accordance with restricted speed requirements and stop short of the standing train because they had fallen asleep due to fatigue resulting from their irregular work schedules and their medical conditions.''[4] NTSB recommended that FRA ''require railroads to medically screen employees

[1] Gay, P., Weaver, T., Loube, D., Iber, C. (2006). Evaluation of positive airway pressure treatment for sleep related breathing disorders in adults. Positive Airway Pressure Task Force; Standards of Practice Committee; American Academy of Sleep Medicine. Sleep 29:381–401.

[2] *Work Zone Collision Between a Tractor-Semitrailer and a Tennessee Highway Patrol Vehicle, Jackson, Tennessee, July 26, 2000,* Highway Accident Report NTSB/HAR–02/01 (Washington, DC: National Transportation Safety Board, 2002), available at *http://www.ntsb.gov/investigations/AccidentReports/Reports/HAR0201.pdf.*

[3] NTSB, Railroad Accident Report, RAR–12/02, Collision of BNSF Coal Train with the Rear End of Standing BNSF Maintenance-of-Way Equipment Train, Red Oak, Iowa, April 17, 2011, pp. 43–44. *http://www.ntsb.gov/investigations/AccidentReports/Reports/RAR1202.pdf.*

[4] *Id.* at 72.

with safety sensitive duties for sleep apnea and other sleep disorders.'' [5]

Metro-North Railroad Derailment, Bronx, NY

On December 1, 2013, at approximately 7:20 a.m. EST, southbound Metro-North Railroad (Metro-North) passenger train 8808 derailed as it approached the Spuyten Duyvil Station in New York City. All passenger cars and the locomotive derailed, and, as a result, four passengers died and at least 61 passengers were injured. The train was traveling at 82 mph when it derailed in a section of curved track where the maximum authorized speed was 30 mph. Following the accident, the engineer reported that: (1) He felt dazed just before the derailment; [6] and (2) his wife had previously complained about his snoring. The engineer then underwent a sleep evaluation, which identified excessive daytime sleepiness, followed by a sleep study, which diagnosed severe OSA. Based on its investigation of the derailment, the NTSB concluded that the engineer had multiple OSA risk factors, such as obesity, male gender, snoring, complaints of fatigue, and excessive daytime sleepiness. Even though the engineer exhibited these OSA risk factors, neither his personal health care provider nor his Metro-North occupational health evaluations had screened the engineer for OSA.[7] NTSB determined that the probable cause of the accident was the ''engineer's noncompliance with the 30-mph speed restriction because he had fallen asleep due to undiagnosed severe obstructive sleep apnea exacerbated by a recent circadian rhythm shift required by his work schedule.'' [8]

Union Pacific Railroad and BNSF Railway Chaffee Collision

On May 25, 2013, at approximately 2:30 a.m., a Union Pacific Railroad (UP) freight train collided with a BNSF freight train at an interlocking near Chaffee, Missouri. The collision resulted in the derailment of 13 cars from the BNSF train, two locomotives and 11 cars from the UP train, and a diesel fuel fire. The two crew members from the UP train were injured and transported to a local hospital. The derailing train cars struck nearby highway bridge supports, resulting in the collapse of portions of the bridge, two motor vehicle accidents, and injury to five motor vehicle occupants. NTSB estimated the total damages to be more than $11 million.[9]

NTSB determined the probable cause of the accident to be ''failure of the Union Pacific Railroad train crewmembers to comply with wayside signals leading into the Rockview Interlocking as a result of their disengagement from their task, likely because of fatigue-induced performance degradation.'' NTSB concluded that a contributing factor to the engineer's fatigue was undiagnosed OSA.[10]

NTSB also concluded that absence of positive train control (PTC) [11] was a contributing factor in each of the above train accidents.[12] FRA agrees that PTC is an important technology that may prevent certain types of accidents in which OSA is a contributing factor. Nevertheless, PTC is not required on all track segments and any potential OSA regulations could have substantial positive impact at those locations. Potential OSA regulations could also have benefits even where PTC is fully implemented. For instance, compliance with potential OSA regulations could prevent incidents that PTC is not designed to prevent. Even in a situation when an engineer with OSA falls asleep and PTC functions as intended and stops a moving train before certain incidents,[13] there may be delay costs to passengers and other trains from attending to the engineer that could be avoided by potential OSA regulations. The three examples of train accidents described above are illustrative of the consequences that could result from accidents that occur due to OSA.

What actions have the Department's operating administrations taken?

The Department promotes the safety of America's transportation system through information, Web sites, regulations, guidelines, and policies. The Department's operating administrations regulate transportation safety following authorizations from the Congress. The authorities for determining and ensuring that transportation operators engaged in interstate commerce are physically qualified differ among the Department's operating administrations. Several administrations have been working for many years, in some instances along with advisory groups, to improve policies on medical fitness for duty of personnel in safety-critical functions. The sections below summarize the initiatives that several DOT operating administrations have taken to address OSA under their current authority.

Federal Aviation Administration (FAA)

Although this ANPRM covers how FMCSA and FRA will potentially treat OSA, FAA's history of its OSA screening of pilots is instructive. The FAA was created to provide the safe and efficient use of the national air space; that mission has evolved to providing the safest, most efficient aerospace system in the world. While the United States has an impressive safety record, the FAA continues to work with the aviation and medical communities to maintain medical certification standards to keep our skies safe. The FAA has always considered OSA a disqualifying condition, but has used its special issuance process [14] to certificate airman if the hazard of OSA was satisfactorily treated or mitigated.

In November 2013, FAA proposed guidance that would have required pilots with a body mass index (BMI) of 40 or more to be evaluated for OSA. Key aviation industry stakeholders, as well as members of Congress, expressed concerns about this single-factor enhanced screening as lacking a sufficient evidentiary basis, and thus being an example of overregulation by the FAA.

In response, FAA worked with stakeholders, to revise the guidance to address those concerns and issued new medical guidance to Aviation Medical Examiners (AMEs) on March 2, 2015, which balanced industry and Congressional concerns with the FAA and NTSB's safety concerns about pilots flying with OSA. Under the new guidance, AMEs screen airman for OSA using an integrated assessment of history, symptoms, and physical/clinical findings. If screening identifies a need for further evaluation, an OSA risk factor evaluation will be done by the AME at the time of the physical

[5] *Id.* at 73.

[6] NTSB, Railroad Accident Brief, RAB–14/12, Metro-North Railroad Derailment, October 24, 2014, p. 2. *http://www.ntsb.gov/investigations/AccidentReports/Reports/RAB1412.pdf.*

[7] *Id.* at 3.

[8] *Id.* at 5.

[9] NTSB, Railroad Accident Report 14/02, Collision of Union Pacific Railroad Freight Train with BNSF Railway Freight Train Near Chaffee, Missouri, May 25, 2013, p. ii. *http://www.ntsb.gov/investigations/accidentreports/reports/rar1402.pdf.*

[10] *Id.* at 42.

[11] The NTSB report for the Red Oak accident concluded that a lack of a PTC system ''that identifies the rear of a train and stops a following train if a safe braking profile is exceeded'' contributed to the accident. NTSB Railroad Accident Report, RAR–12/02 at 72. NTSB further concluded that the type of PTC system that was in development or being deployed at the time of the report (2011) would not address this type of accident. *Id.* at 71.

[12] *See id.* at 72; NTSB Railroad Accident Brief, RAB–14/12 at 5; and NTSB Railroad Accident Report 14/02 at 37–38, and 50.

[13] *See* 49 CFR 236.1005(a).

[14] *https://www.faa.gov/about/office_org/headquarters_offices/avs/offices/aam/ame/guide/app_process/general/si.*

examination using the American Academy of Sleep Medicine (AASM) guidance provided in the *Guide for Aviation Medical Examiners.*[15]

A pilot identified as being at risk for OSA will be issued a medical certificate, and shortly thereafter receive a letter from FAA's Federal Air Surgeon requesting that an OSA evaluation be completed within 90 days. The evaluation may be done by any physician (including the AME), not just a sleep medicine specialist. If the evaluating physician determines, using the AASM guidelines, that a laboratory sleep study or home study is warranted, it should be ordered at that time. The pilot will have 90 days (or longer under special circumstances) to accomplish this, as outlined in the Federal Air Surgeon's letter. The pilot may continue flying during the evaluation period until they have been diagnosed with OSA. A pilot is not allowed to fly once diagnosed with OSA, but upon submitting documentation of effective treatment to FAA, the FAA will then consider the pilot for a special issuance medical certificate, which allow the pilot to resume flying. More information on FAA guidance can be found at: *https://www.faa.gov/news/fact_sheets/news_story.cfm?newsId=18156.*

Federal Motor Carrier Safety Administration

FMCSA's October 5, 2000, Advisory Criteria

In 2000, FMCSA issued advisory criteria providing interpretive guidance to MEs concerning its physical qualifications standards. These advisory criteria are recommendations from FMCSA to assist MEs in applying the minimum physical qualification standards. The advisory criteria were published with the Federal Motor Carrier Safety Regulations as part of the medical examination report form in 49 CFR. 391.43 (Physical Qualification of Drivers; Medical Examination; Certificate, 65 FR 59363 (October 5, 2000)).

The advisory criterion for section 391.41(b)(5), which has been unchanged since 2000, provides the following guidance for MEs in making the determination whether a driver satisfies the respiratory standard:

> [Because] a driver must be alert at all times, any change in his or her mental state is in direct conflict with highway safety. Even the slightest impairment in respiratory function under emergency conditions (when greater oxygen supply is necessary for performance) may be detrimental to safe driving.
>
> There are many conditions that interfere with oxygen exchange and may result in incapacitation, including emphysema, chronic asthma, carcinoma, tuberculosis, chronic bronchitis and sleep apnea. If the MEs detect a respiratory dysfunction that in any way is likely to interfere with the driver's ability to safely control and drive a commercial motor vehicle, the driver must be referred to a specialist for further evaluation and therapy. . . .

Based on the above advisory criterion, it is clear that FMCSA considers OSA to be a respiratory dysfunction that interferes with oxygen exchange. As such, if a ME believes a driver's respiratory condition is, in any way, likely to interfere with the driver's ability to safely control and drive a commercial motor vehicle, the examiner may refer the driver to a specialist for further evaluation and therapy. This advisory criterion is helpful to MEs when the examiner has sufficient experience or information to recognize certain risk factors for OSA and when a driver tells the examiner that he has been diagnosed with OSA. Under these circumstances, MEs may consider referring the driver to a specialist for evaluation before issuing a ME's certificate, or request additional information from the driver and his treating healthcare professional about the management of the driver's OSA, respectively. However, the current guidance is not helpful if the ME does not have sufficient experience or information to suspect the driver may have OSA, or the driver does not share with the examiner any previous diagnosis that he has the condition.

MRB and MCSAC Recommendations

In consideration of the limitations of the current advisory criterion, FMCSA tasked its MRB and MCSAC in 2011 to provide recommendations that FMCSA should consider to (1) develop new OSA standards for motor carriers, commercial vehicle drivers, and MEs and (2) determine whether drivers with this respiratory condition should receive an unrestricted two-year medical certificate to operate CMVs in interstate commerce. The MCSAC also recommended interim actions that FMCSA could take to help MEs address the issue before completing a rulemaking. A copy of the task statement, all presentations provided to the MCSAC, MRB, and the Committees' December 13, 2011, letter report to the FMCSA Administrator are included in the docket referenced at the beginning of this notice and also at the MCSAC Web page at *https://www.fmcsa.dot.gov/advisory-committees/mcsac/2012-past-meetings.*

During the deliberations of the MCSAC and MRB, experts indicated that studies[16] show that a using a BMI of 33 as a screening indicator for OSA is the value at which false positives and false negatives are minimized. A false positive would require a driver who does not have moderate-to-severe OSA to undergo a sleep study unnecessarily, while a false negative would fail to require a driver who actually has moderate-to-severe OSA to undergo a sleep study. The medical experts participating in the meeting indicated that approximately 75 percent of moderate-to-severe OSA cases would be correctly identified by requiring a sleep study for drivers with a BMI of 33 or greater; however, approximately 25 percent of drivers with moderate-to-severe OSA would be missed with this cutoff. Because the likelihood of OSA in patients with BMIs of 35 or greater rises to nearly 80 percent, the MCSAC and MRB agreed to use a BMI of 35 (rather than 33) in their interim advice to MEs screening drivers for referral to a specialist. A copy of the MCSAC and MRB discussion notes is included in the docket referenced at the beginning of this notice.

The chairs of the MRB and MCSAC considered their December 13, 2011, report as a first step towards recommendations for addressing OSA. The two committees completed more detailed recommendations in February 2012 to support a future notice-and-comment rulemaking. A copy of those recommendations is included in the docket referenced at the beginning of this notice.

Before FMCSA issued a notice requesting public comment on proposed regulatory guidance, several stakeholder groups expressed concerns about the agency addressing OSA through regulatory guidance, even on an interim basis. These groups requested that FMCSA pursue the matter through a notice-and-comment rulemaking process.

In 2013, Congress enacted Public Law 113–45 (127 Stat. 557, October 13, 2013, in a note to 49 U.S.C. 31305) directing FMCSA to issue any new or revised requirements concerning sleep disorders, including OSA, by rulemaking. Such requirements would include those for sleep apnea screening, testing, and treatment of CMV drivers.

[15] *https://www.faa.gov/about/office_org/headquarters_offices/avs/offices/aam/ame/guide/.*

[16] Numerous studies were cited in presentations to the groups; links to two relevant presentations are: (1) *https://www.fmcsa.dot.gov/advisory-committees/mcsac/addressing-obstructive-sleep-apnea-cmv-drivers,* and (2) *https://www.fmcsa.dot.gov/advisory-committees/mcsac/screening-osa-commercial-vehicle-operators.*

On January 12, 2015, FMCSA issued a bulletin to healthcare professionals on the National Registry of Certified Medical Examiners regarding OSA. The bulletin reminded healthcare workers of the current physical qualifications standards and advisory criteria concerning the respiratory system, and specifically how those requirements apply to drivers that may have OSA. It encouraged MEs to explain to drivers the distinction between actions based on the current regulations and advisory criteria versus actions based on the MEs' professional judgment.

Federal Railroad Administration

The FRA has taken various regulatory and non-regulatory actions to address the risk of accidents in which fatigue and/or OSA may be a contributing factor.

FRA Hours of Service Laws and Regulations

FRA enforces laws and has issued regulations regarding hours of service for certain railroad employees. *See* 49 U.S.C. chapter 211 and 49 CFR part 228. The hours of service (HOS) laws and regulations establish maximum hours of work and minimum hours of rest for train employees, signal employees, and dispatching service employees, as defined at 49 U.S.C. 21101.

HOS laws and regulations are a necessary component of mitigating risk associated with work schedules, including potential fatigue-related risks. However, HOS laws and regulations do not adequately mitigate risks associated with undiagnosed or inadequately treated OSA, even if the work schedules comply with the HOS laws and regulations, as they assume that the sleep that occurs during off-duty time is normal, restful sleep.

Fatigue Management Plans

RSIA also requires certain railroads to establish a fatigue management plan. *See* 49 U.S.C. 20156(f). FRA is currently working with the Railroad Safety Advisory Committee (RSAC) to draft a regulation to implement this mandate. The RSIA requires plans to be ''designed to reduce the fatigue experienced by safety-related railroad employees and to reduce the likelihood of accidents, incidents, injuries, and fatalities caused by fatigue.'' *Id.* at section 20156(f)(1). Further, the RSIA requires a railroad to consider the need to include in its fatigue management plan, as applicable, ''opportunities for identification, diagnosis, and treatment of any medical condition that may affect alertness or fatigue, including sleep disorders.'' *Id.* at section 20156(f)(3)(B). However, RSIA does not specifically mandate that the regulation require railroads to screen and evaluate safety-related railroad employees for OSA or other sleep disorders.

FRA Safety Advisory 2004–04

On September 21, 2004, FRA issued Safety Advisory 2004–04 to alert the railroad community, and especially those employees with safety sensitive duties, to the danger associated with degradation of performance resulting from sleep disorders that are undiagnosed or not successfully treated. 69 FR 58995 (Oct. 1, 2004). FRA recommended that the railroad community take the following actions:

1. Establish training and educational programs to inform employees of the potential for performance impairment as a result of fatigue and sleep related issues;
2. Develop standardized screening tools for diagnosis, referral, and treatment of sleep disorders (especially sleep apnea);
3. Develop rules to encourage voluntary reporting of sleep disorders by employees with safety sensitive duties;
4. Implement policies that would prohibit employees in safety sensitive positions who have incapacitation or performance-impairing medical conditions related to sleep from performing any safety sensitive duties until the medical condition appropriately responds to treatment; and
5. Implement policies to: (a) Promote self-reporting; (b) encourage participation in evaluation and treatment; and (c) establish dispute resolution to resolve any issues regarding fitness of those employees who have reported sleep-related issues.

RSAC Medical Standards Working Group

In September 2006, the RSAC established the Medical Standards Working Group to develop standards for identifying conditions that could lead to sudden incapacitation or impairment of safety-critical personnel. The Working Group established a Physicians Task Force that developed draft medical standards and protocols. FRA put the Medical Standards Working Group on hiatus due to the requirement to focus on activities mandated in the Rail Safety Improvement Act of 2008.

Railroaders' Guide to Healthy Sleep Web Site

As part of its non-regulatory efforts to address fatigue, FRA sponsors the *Railroaders' Guide to Healthy Sleep* Web site.[17] This Web site is set up to disseminate educational information to railroad employees and their families about sleep disorders, the relevance of healthy sleep to railroad safety, and information about improving the quality of the railroaders' sleep. The Web site was developed in conjunction with the Division of Sleep Medicine at Harvard Medical School, WGBH Educational Foundation, and Volpe—The National Transportation Systems Center.

Why do the Agencies believe regulatory action may be necessary?

Based on the potential severity of OSA-related transportation incidents and accidents, and the varied, non-regulatory, OSA-related actions taken by the Department's Operating Administrations to date, the Agencies are considering taking regulatory action to ensure consistency in addressing the safety issue presented by transportation workers with safety sensitive duties who are at risk for OSA.

The Agencies seek information from interested parties regarding OSA, in order to better inform their decision on whether to take regulatory action and, if so, how to craft the most effective and efficient regulation to address the potential safety risks associated with OSA.

Request for Comments

The Agencies request public comment on the questions below. In your response, please provide supporting materials and identify your interest in this rulemaking, whether in the transportation industry, medical profession, or other.

The Problem of OSA

1. What is the prevalence of moderate-to-severe OSA among the general adult U.S. population? How does this prevalence vary by age?
2. What is prevalence of moderate-to-severe OSA among individuals occupying safety sensitive transportation positions? If it differs from that among the general population, why does it appear to do so? If no existing estimates exist, what methods and information sources can the agencies use to reliably estimate this prevalence?
3. Is there information (studies, data, etc.) available for estimating the future consequences resulting from individuals with OSA occupying safety sensitive transportation positions in the absence of new restrictions? For example, does any organization track the number of historical motor carrier or train

[17] *https://www.railroadersleep.org/.*

accidents caused by OSA? With respect to rail, how would any OSA regulations and the current PTC requirements interrelate?

4. Which categories of transportation workers with safety sensitive duties should be required to undergo screening for OSA? On what basis did you identify those workers?

Cost & Benefits

5. What alternative forms and degrees of restriction could FMCSA and FRA place on the performance of safety-sensitive duties by transportation workers with moderate-to-severe OSA, and how effective would these restrictions be in improving transportation safety? Should any regulations differentiate requirements for patients with moderate, as opposed to severe, OSA?

6. What are the potential costs of alternative FMCSA/FRA regulatory actions that would restrict the safety sensitive activities of transportation workers diagnosed with moderate-to-severe OSA? Who would incur those costs? What are the benefits of such actions and who would realize them?

7. What are the potential improved health outcomes for individuals occupying safety sensitive transportation positions and would receive OSA treatment due to regulations?

8. What models or empirical evidence is available to use to estimate potential costs and benefits of alternative restrictions?

9. What costs would be imposed on transportation workers with safety sensitive duties by requiring screening, evaluation, and treatment of OSA?

10. Are there any private or governmental sources of financial assistance? Would health insurance cover costs for screening and/or treatment of OSA?

Screening Procedures & Diagnostics

11. What medical guidelines other than the AASM FAA currently uses are suitable for screening transportation workers with safety sensitive duties that are regulated by FMCSA/FRA for OSA? What level of effectiveness are you seeing with these guidelines?

12. What were the safety performance histories of transportation workers with safety sensitive duties who were diagnosed with moderate-to-severe OSA, who are now successfully compliant with treatment before and after their diagnosis?

13. When and how frequently should transportation workers with safety sensitive duties be screened for OSA? What methods (laboratory, at-home, split, etc.) of diagnosing OSA are appropriate and why?

14. What, if any, restrictions or prohibitions should there be on a transportation workers' safety sensitive duties while they are being evaluated for moderate-to-severe OSA?

15. What methods are currently employed for providing training or other informational materials about OSA to transportation workers with safety sensitive duties? How effective are these methods at identifying workers with OSA?

Medical Personnel Qualifications & Restrictions

16. What qualifications or credentials are necessary for a medical practitioner who performs OSA screening? What qualifications or credentials are necessary for a medical practitioner who performs the diagnosis and treatment of OSA?

17. With respect to FRA should it use Railroad MEs to perform OSA screening, diagnosis, and treatment?

18. Should MEs or other Agencies' designated medical practitioners impose restrictions on a transportation worker with safety sensitive duties who self-reports experiencing excessive sleepiness while performing safety sensitive duties?

Treatment Effectiveness

19. What should be the acceptable criteria for evaluating the effectiveness of prescribed treatments for moderate-to-severe OSA?

20. What measures should be used to evaluate whether transportation employees with safety sensitive duties are receiving effective OSA treatment?

Rulemaking Analyses and Notices

Executive Order (E.O.) 12866 (Regulatory Planning and Review) and DOT Regulatory Policies and Procedures

Under E.O. 12866, ''Regulatory Planning and Review'' (issued September 30, 1993, published October 4 at 58 FR 51735, and discussed above in the ''Background'' section), as supplemented by E.O. 13563 and DOT policies and procedures, if a regulatory action is determined to be ''significant,'' it is subject to Office of Management and Budget (OMB) review. E.O. 12866 defines ''significant regulatory action'' as one likely to result in a rule that may:

(1) Have an annual effect on the economy of $100 million or more or adversely affect in a material way the economy, a sector of the economy, productivity, competition, jobs, the environment, public health or safety, or State, local, or Tribal government or communities.

(2) Create a serious inconsistency or otherwise interfere with an action taken or planned by another Agency.

(3) Materially alter the budgetary impact of entitlements, grants, user fees, or loan programs or the rights and obligations of recipients thereof.

(4) Raise novel legal or policy issues arising out of legal mandates, the President's priorities, or the principles set forth in the E.O.

The Department has determined this ANPRM is a ''significant regulatory action'' under E.O. 12866, and significant under DOT regulatory policies and procedures due to significant public interest in the legal and policy issues addressed. Therefore, this notice has been reviewed by OMB.

Issued under the authority of delegations in 49 CFR 1.87(f) and (i) and 49 CFR 1.89(a), respectively:

T.F. Scott Darling III,

Acting Administrator, Federal Motor Carrier Safety Administration.

Sarah Feinberg,

Administrator, Federal Railroad Administration.

[FR Doc. 2016–05396 Filed 3–9–16; 8:45 am]

BILLING CODE 4910–EX–P

DEPARTMENT OF TRANSPORTATION

National Highway Traffic Safety Administration

49 CFR Part 571

[Docket No. NHTSA–2016–0029]

RIN 2127–AL68

Federal Motor Vehicle Safety Standards; Electric-Powered Vehicles: Electrolyte Spillage and Electrical Shock Protection

AGENCY: National Highway Traffic Safety Administration (NHTSA), Department of Transportation (DOT).

ACTION: Notice of proposed rulemaking (NPRM).

SUMMARY: NHTSA is proposing to amend Federal Motor Vehicle Safety Standard (FMVSS) No. 305, ''Electric-powered vehicles: Electrolyte spillage and electrical shock protection,'' to adopt various electrical safety requirements in Global Technical Regulation (GTR) No. 13, ''Hydrogen and fuel cell vehicles.'' To expand the standard's performance requirements beyond post-crash conditions, NHTSA proposes to adopt electrical safety requirements to protect against direct and indirect contact of high voltage

sources during everyday operation of electric-powered vehicles. Also, NHTSA proposes to adopt an optional method of meeting post-crash electrical safety requirements consistent with that set forth in GTR No. 13 involving use of physical barriers to prevent direct or indirect contact (by occupants or emergency services personnel) with high voltage sources. Today's proposal would facilitate the introduction of new technologies including hydrogen fuel cell vehicles and 48 volt mild hybrid technologies, and responds not only to GTR No. 13 but also to petitions for rulemaking from Toyota Motor North America Inc. (Toyota) and the Auto Alliance (Alliance).

DATES: Comments must be received on or before May 9, 2016.

Proposed compliance date: We believe there is widespread conformance of vehicles to the proposed requirements. Accordingly, we propose that the compliance date for the amendments in this rulemaking action would be 180 days after the date of publication of the final rule in the **Federal Register**. We propose to permit optional early compliance with the amended requirements.

ADDRESSES: You may submit comments to the docket number identified in the heading of this document by any of the following methods:

- *Federal eRulemaking Portal:* Go to *http://www.regulations.gov.* Follow the online instructions for submitting comments.
- *Mail:* Docket Management Facility, M–30, U.S. Department of Transportation, West Building, Ground Floor, Rm. W12–140, 1200 New Jersey Avenue SE., Washington, DC 20590.
- *Hand Delivery or Courier:* West Building Ground Floor, Room W12–140, 1200 New Jersey Avenue SE., between 9 a.m. and 5 p.m. Eastern Time, Monday through Friday, except Federal holidays.
- *Fax:* (202) 493–2251.

Regardless of how you submit your comments, please mention the docket number of this document.

You may also call the Docket at 202–366–9324.

Instructions: For detailed instructions on submitting comments and additional information on the rulemaking process, see the Public Participation heading of the Supplementary Information section of this document. Note that all comments received will be posted without change to *http://www.regulations.gov,* including any personal information provided.

Privacy Act: Please see the Privacy Act heading under Rulemaking Analyses and Notices.

FOR FURTHER INFORMATION CONTACT: For technical issues, you may call William J. Sanchez, Office of Crashworthiness Standards (telephone: 202–493–0248) (fax: 202–493–2990). For legal issues, you may call Deirdre Fujita, Office of Chief Counsel (telephone: 202–366–2992) (fax: 202–366–3820). Address: National Highway Traffic Safety Administration, U.S. Department of Transportation, 1200 New Jersey Avenue SE., West Building, Washington, DC 20590.

SUPPLEMENTARY INFORMATION:

Table of Contents

I. Executive Summary
II. FMVSS No. 305
III. The Global Technical Regulation
a. Overview of the Process
b. Overview of GTR No. 13
1. Electric Safety Requirements During Normal Vehicle Operation
2. Electric Safety Requirements Post-Crash Test
c. How does this proposal differ from GTR No. 13?
IV. Battelle Study and Developments
V. Toyota Petition for Rulemaking
VI. Alliance Petition for Rulemaking
VII. Overview of Proposed Rule
VIII. Proposal Addressing Safety During Normal Vehicle Operations
IX. Proposal Addressing Safety Post-Crash
X. Rulemaking Analyses and Notices
XI. Public Participation

I. Executive Summary

NHTSA is issuing this NPRM as part of the agency's ongoing effort to harmonize vehicle safety standards under the Economic Commission for Europe 1998 Global Agreement (''1998 Agreement''). The efforts of the U.S. and other contracting parties to the 1998 Agreement culminated in the establishment of GTR No. 13, ''Hydrogen and fuel cell vehicles.'' NHTSA voted in June 2013 in favor of establishing GTR No. 13. In this NPRM, we are proposing requirements based on the electrical safety requirements of GTR No. 13. NHTSA will initiate rulemaking in the future on other aspects of GTR No. 13 directly pertaining to the fuel system integrity of hydrogen fuel cell vehicles.

One purpose of FMVSS No. 305 is to reduce deaths and injuries from electrical shock. The standard requires vehicles with high voltage sources to meet certain performance criteria to protect vehicle occupants, rescue workers and others who may come in contact with the vehicle after a crash. Among other things, FMVSS No. 305 requires that after a crash, high voltage sources in a vehicle are either (a) electrically isolated from the vehicle's chassis or (b) their voltage is below specified levels considered safe from electric shock hazards. Since the physiological impacts of direct current (DC) are less than those of alternating current (AC), the standard specifies lower minimum electrical isolation requirements for certain DC components (100 ohms/volt) than for AC components (500 ohms/volt).

GTR No. 13 also has requirements intended to reduce deaths and injuries from electrical shock. Unlike FMVSS No. 305, GTR No. 13 has requirements that reduce the risk of harmful electric shock during normal vehicle operation. This NPRM proposes to adopt those requirements to expand FMVSS No. 305's performance requirements beyond post-crash conditions. In addition, while the various post-crash compliance options in GTR No. 13 are similar to those in FMVSS No. 305, GTR No. 13 includes a compliance option for electrical vehicle safety that prevents direct and indirect contact of high voltage sources by way of ''physical barriers.'' NHTSA is now proposing to amend FMVSS No. 305 to permit a physical barrier compliance option.[1]

NHTSA tentatively believes that the by-product of adopting a physical barrier option would be more than harmonizing vehicle standards. Enhanced design innovation, reduced CO_2 emissions and increased fuel economy would likely result. This proposal would facilitate the introduction of 48 volt mild hybrid technologies and hydrogen fuel cell vehicles, and responds not only to GTR No. 13 but also to petitions for rulemaking from Toyota and the Alliance.

Petitioner Toyota believes that an additional compliance option that includes elements of the physical barrier option in GTR No. 13 is needed to allow hydrogen fuel cell vehicles (HFCVs) to be offered for sale in the U.S.[2] HFCVs and other electric powered

[1] Our proposed physical barrier option varies slightly from GTR No. 13. GTR No. 13 provides contracting parties discretion in whether to propose the option in their domestic regulatory process. In our proposal today, we are not proposing to adopt GTR No. 13's physical barrier option. However, as further discussed, below, we are adopting a modified physical barrier option that we believe will also afford the compliance flexibility that GTR No. 13 seeks to provide, while at the same time providing a level of safety closer to the other post-crash compliance options. A small number of minor additional provisions are proposed as well. These additional provisions would not significantly alter our incorporation of GTR No. 13 and are consistent with the goal of incorporating a standard that is harmonized with other international standards.

[2] Subsequent to its submission of the petition for rulemaking, Toyota submitted and was granted a temporary exemption from FMVSS No. 305 for an HFCV (see grant of petition, January 2, 2015 (80 FR 101)). Toyota incorporates electrical protection barriers (conductively connected to the electric

vehicles operate with their DC high voltage sources (*e.g.* high voltage battery) connected to the AC high voltage sources (*e.g.* electric motor). In a moderate to severe crash (*e.g.,* crash speeds at which an air bag would deploy), electric powered vehicles are generally designed with an automatic disconnect mechanism that activates and breaks the conductive link between the electrical energy storage system and the rest of the power train. Under these crash conditions in which an automatic disconnect mechanism activates, Toyota states that its HFCVs would be able to meet the electrical safety requirements of FMVSS No. 305. However, in low speed crashes where the automatic disconnect mechanism is not designed to activate so that the vehicle can be driven away after a minor crash (fender-bender), Toyota states that its HFCVs would not be able to meet the electrical safety requirements in FMVSS No. 305. The petitioner believes that the additional compliance option requested in its petition would solve this problem and would not cause any reduction in the level of electrical safety now required by FMVSS No. 305.

Petitioner Alliance requests a physical barrier compliance option to facilitate the production of 48 volt mild hybrid technologies as well as hydrogen fuel cell vehicles. The petitioner asks NHTSA to amend FMVSS No. 305 to adopt a physical barrier option incorporated in the Society of Automotive Engineers (SAE) J1766 Jan 2014,[3] section 5.3.4, for 48 volt mild hybrid systems. The Alliance believes that the provisions for physical barriers in section 5.3.4 incorporate the requirements of GTR No. 13 and provide for physical barriers that ensure equal levels of safety as that afforded by the current FMVSS No. 305 electrical safety requirements.

The petitioner states that while vehicles with 48 volt mild hybrid systems use mostly low-voltage components that do not present any danger of harmful electric shock, AC voltage sources contained within the system can exceed the 30 volt threshold in FMVSS No. 305 for consideration as a high voltage source. Since these systems are grounded to the vehicle chassis, they cannot meet FMVSS No. 305's existing electrical isolation option. The petitioner states that while it is feasible to design a 48 volt mild hybrid system that is isolated from the chassis and meets FMVSS No. 305's electrical isolation requirements, such designs involve more complexity, higher consumer costs, and higher mass resulting in reduced fuel economy and increased emissions. The petitioner believes that these penalties are inappropriate when there would be no incremental safety benefit gained beyond that associated with SAE J1766's physical barrier option.

NHTSA has undertaken this rulemaking after carefully and extensively examining the safety issues. The agency previously decided against consideration of a physical barrier option earlier in the history of FMVSS No. 305, when our knowledge about the option was limited.[4] Commenters to an NPRM to upgrade electrical shock protection requirements had asked NHTSA to adopt the option in the final rule, for reasons similar to those provided by petitioners Toyota and the Alliance. NHTSA declined, citing concerns about the lack of notice for the provision, the absence of developed test procedures to ensure protection from indirect contact, and uncertainty as to whether the option would sufficiently account for indirect contact failure modes. NHTSA then decided to undertake a research program (later known as the Battelle study, discussed below in this preamble) to better understand the issues related to a physical barrier option for electrical safety.

Since that decision in 2010, a number of developments led to today's proposal. GTR No. 13 was established, a product of shared data and knowledge from governing bodies and international experts around the world. The Battelle study was completed and the physical barrier countermeasure design was made more robust in response to its findings, with SAE revising J1766 in January 2014 to set forth more protective safety practices than it had before to address remote albeit lingering concerns. Importantly, there have now been years of worldwide recognition of the physical barrier option as an acceptable means of providing electrical safety in electric powered vehicles, with years of experience in design labs and in the field showing no evidence of associated safety problems. HFCVs, 48 volt mild hybrid technologies, and other vehicle designs have become a reality, and with them abundant potential for the development of electrical technologies that a physical barrier option in FMVSS No. 305 can facilitate, expedite and safeguard.

We estimate that adopting this NPRM would come at essentially no cost to consumers in the U.S. This proposal closely mirrors the electrical safety provisions of GTR No. 13, which have been implemented by manufacturers in this country.

NHTSA believes that this NPRM would improve the level of safety afforded to the public. Adopting the provisions from GTR No. 13 that reduce the risk of harmful electric shock during normal vehicle operation would improve FMVSS No. 305 by expanding its performance requirements beyond post-crash conditions. The proposed requirements would provide post-crash compliance options for new power train configurations that ensure that those configurations provide a comparable level of post-crash safety compared to existing electric vehicles.

Summary of Proposal

The proposed amendments are summarized as follows. In furtherance of implementing GTR No. 13 and in response to the petitions for rulemaking—

a. This NPRM proposes to add electrical safety requirements for vehicle performance during everyday (''normal'') vehicle operations (as opposed to during and after a crash), to mitigate electric shock due to loss in electrical isolation and direct or indirect contact of high voltage sources. The electrical safety requirements during normal vehicle operations would include requirements for:

1. Direct contact protection from high voltage sources

i. IPXXD protection level[5] for high voltage sources inside passenger and luggage compartments. IPXXB protection level for high voltage sources not in passenger and luggage compartments.

ii. IPXXB protection level for service disconnect that can be opened or removed without tools.

iii. Markings on barriers of high voltage sources that can be physically accessed, opened, or removed without the use of tools.

chassis with low resistance) and maintains at least a 100 ohms/volt electrical isolation into their design. NHTSA granted the petition for exemption on the basis that the exemption would make the development or field evaluation of a low emission (zero emission) vehicle easier and would not unreasonably reduce the safety of the vehicle.

[3] SAE J1766, ''Recommended practice for electric, fuel cell, and hybrid electric vehicle crash integrity testing,'' January 2014, SAE International, *http://www.sae.org.*

[4] See final rule, 75 FR 33515, June 14, 2010; response to petitions for reconsideration, 76 FR 45436, July 29, 2011.

[5] IPXXB and IPXXD ''protection levels'' refer to the ability of the physical barriers to prevent entrance of a probe into the enclosure, to ensure no direct contact with high voltage sources. ''IPXXB'' is a probe representing a small human finger. ''IPXXD'' is a slender wire probe. Protection degrees IPXXD and IPXXB are International Electrotechnical Commission specifications for protection from direct contact of high voltage sources.

iv. Orange color outer covering for cables of high voltage sources that are located outside electrical protection barriers.[6]

2. Indirect contact protection from high voltage sources

Exposed conductive parts of electrical protection barriers would have to be conductively connected to the chassis with a resistance less than 0.1 ohms, and the resistance between two simultaneously reachable exposed conductive parts of electrical protection barriers that are within 2.5 meters of each other would have to be less than 0.2 ohms.

3. Electrical isolation of high voltage sources

i. 500 ohms/volt or higher electrical isolation for AC high voltage sources and 100 ohms/volt or higher for DC high voltage sources.

ii. For conditions where AC and DC bus are connected, AC high voltage sources would be permitted to have electrical isolation of 100 ohms/volt or higher, provided they also have the direct and indirect contact protection described in 1 and 2, above.

iii. There would be an exclusion of 48 volt hybrid vehicles from electrical isolation requirements during normal vehicle operation.

4. Electrical isolation monitoring system for DC high voltage sources on fuel cell vehicles.

5. Electrical safety during charging involving connecting the vehicle to an external electric power supply:

i. Minimum electrical isolation resistance of one million ohm of the coupling system for charging the electrical energy storage system; and

ii. Conductive connection of the electric chassis to earth ground before and during exterior voltage is applied.

6. Mitigating driver error by—

i. Requiring an indication to the driver when the vehicle is in active driving mode upon vehicle start up and when the driver is leaving the vehicle; and,

ii. Preventing vehicle movement by its own propulsion system when the vehicle charging system is connected to the external electric power supply.

b. This NPRM also proposes to amend FMVSS No. 305's post-crash electrical safety requirements. The proposed post-crash electrical safety requirements include:

1. Adding an additional optional method of meeting post-crash electrical safety requirements through physical barrier protection from high voltage sources. The proposed specifications of this optional method of electric safety include requirements ensuring that:

i. High voltage sources would be enclosed in barriers that prevent direct human contact with high voltage sources (IPXXB protection level),

ii. Exposed conductive parts of electrical protection barriers would be conductively connected to the chassis with a resistance less than 0.1 ohms, and the resistance between any two simultaneously reachable exposed conductive parts of electrical protection barriers that are less than 2.5 meters from each other would be less than 0.2 ohms, and

iii. Voltage between a barrier and other exposed conductive parts of the vehicle would be at a low voltage level that would not cause electric shock (less than 60 VDC[7] or 30 VAC).

2. Permitting an AC high voltage source that is conductively connected to a DC high voltage source to meet lower minimum electrical isolation requirement of 100 ohms/volt, provided the AC high voltage source also has physical barrier protection specified in 1, above.

II. FMVSS No. 305

FMVSS No. 305 currently establishes requirements to reduce deaths and injuries during and after a crash that occurs because of electrolyte spillage from electric energy storage devices, intrusion of electric energy storage/conversion device into the occupant compartment, and electrical shock. Among other things, FMVSS No. 305 requires that during and after the crash tests specified in the standard, high voltage sources in the vehicle must be either (a) electrically isolated from the vehicle's chassis,[8] or (b) their voltage is below specified levels considered safe from electric shock hazards.[9]

Many of these electrical shock protection requirements were established by a June 14, 2010 final rule (75 FR 33515) that revised the standard to align it more closely with the April 2005 version of SAE J1766. Commenters to the NPRM preceding the June 14, 2010 final rule (*viz.,* the Alliance and Global Automakers) requested another electrical safety compliance option, called the ''physical barrier option,'' for providing greater flexibility to allow introduction of advanced power train technologies. In the physical barrier option, high voltage sources are enclosed in physical barriers (electrical protection barriers) that do not permit entrance of a finger probe into the enclosure after the crash test to ensure no direct contact with high voltage sources. This option also requires the physical barriers to be conductively connected to the electric chassis to ensure no electric shock due to indirect contact in the event of loss in isolation of a high voltage source.

In the June 14, 2010 final rule, NHTSA declined to adopt the physical barrier option, citing concerns about the sufficiency of notice provided for the provision, the absence of developed test procedures to ensure protection from indirect contact, and uncertainty as to whether the option would sufficiently account for indirect contact failure modes. NHTSA stated that it would undertake a research program (the Battelle study) to better understand the issues related to a physical barrier option for electrical safety.

III. The Global Technical Regulation

a. Overview of the Process

The United States is a contracting party to the ''1998 Agreement'' (the Agreement concerning the Establishing of Global Technical Regulations for Wheeled Vehicles, Equipment and Parts which can be fitted and/or be used on Wheeled Vehicles). This agreement entered into force in 2000 and is administered by the UN Economic Commission for Europe's (UN ECE's) World Forum for the Harmonization of Vehicle Regulations (WP.29). The purpose of this agreement is to establish Global Technical Regulations (GTRs).

GTR No. 13, ''Hydrogen fuel cell vehicles,'' addresses hydrogen fuel cell vehicle technology. NHTSA closely collaborated with experts from contracting parties to the 1998 Agreement, particularly Germany and Japan, to develop a GTR for hydrogen fueled vehicles that would establish levels of safety that are equivalent to or exceeds those for conventional gasoline fueled vehicles. The collaborative effort in this process led to the establishment of GTR No. 13 in June 2013.

The U.S. voted on June 27, 2013 in favor of establishing GTR No. 13. In voting yes to establishing the GTR, NHTSA is obligated to ''submit the technical Regulation to the process'' used in the U.S. to adopt the requirement into our law or regulation. By issuance of this NPRM, NHTSA is initiating the process for considering adoption of GTR No. 13.

[6] An electrical protection barrier is defined in GTR No. 13 as the part providing protection from direct contact with high voltage sources from any direction of access. These may be physical barriers that enclose high voltage sources.

[7] VDC is the voltage for direct current sources and VAC is voltage for alternating current sources.

[8] Under this electrical isolation option, since the physiological impacts of DC are less than those of AC, the standard permits DC high voltage sources with an electrical isolation monitoring system to have lower minimum electrical isolation (100 ohms/volt) than the 500 ohms/volt required for AC high voltage sources. This level of electrical isolation limits the current that could pass through a human body (that is in contact with the vehicle) to no more than 10 milliamperes (mA) DC or 2 mA AC. These levels are considered to be safe levels of current and would not cause any tissue damage, or fibrillation.

[9] Under this low voltage option, electrical components are considered to be low voltage and safe from electric shock hazard if their voltage is less than or equal to 60 VDC or 30 VAC.

Under the terms of the 1998 Agreement, NHTSA is not obligated to adopt the GTR after initiating this process. In deciding whether to adopt a GTR as an FMVSS, we follow the requirements for NHTSA rulemaking, including the Administrative Procedure Act, the National Highway and Motor Vehicle Safety Act (Vehicle Safety Act), Presidential Executive Orders, and DOT and NHTSA policies, procedures and regulations. Among other things, FMVSSs issued under the Vehicle Safety Act ''shall be practicable, meet the need for motor vehicle safety, and be stated in objective terms.'' 49 U.S.C. 30111.

This NPRM does not propose the entirety of GTR No. 13 at this time. This document only addresses the electrical safety requirements in GTR No. 13 (*i.e.,* the electrical isolation requirements, physical barrier requirements, etc.). GTR No. 13 also addresses hydrogen fuel system and fuel container integrity requirements and the agency's plan is to issue a separate proposal to seek comment on incorporating those portions of GTR No. 13 into the relevant FMVSSs.

b. Overview of GTR No. 13

Hydrogen fueled fuel cell vehicles have an electric drive-train powered by a fuel cell that generates electric power electrochemically using hydrogen. The hydrogen is electrochemically combined with oxygen (from air) within the fuel cell system to produce high-voltage electric power. The electric power is supplied to the electric drive motors and/or used to charge batteries and capacitors. HFCVs may also be equipped with batteries to supplement the output of fuel cells and may also recapture energy during stopping through regenerative braking, which recharges batteries and thereby improves efficiency.

The fuel cell provides DC power while the drive motors typically operate on AC. Therefore, the power train has: (a) Inverters to convert DC power to AC to run the motors and (b) converters to convert AC power generated in the drive motor during regenerative braking to DC to store energy in the batteries. In many respects, the electric power train of an HFCV is similar to that of electric and hybrid electric vehicles. GTR No. 13, in part, specifies electrical safety requirements during normal vehicle operation and after a crash test, to protect against electric shock in the event of a failure in the high voltage propulsion system.

In general, the portions of GTR No. 13 that are relevant to this rulemaking are the electric safety requirements intended to protect against the potential for electric shock during (a) normal vehicle operation, and (b) after a crash. We discuss these requirements in GTR No. 13 in the sections below.

1. Electric Safety Requirements During Normal Vehicle Operation

These performance requirements in GTR No. 13 are requirements intended for protecting vehicle occupants (and others that may interact with the vehicle) against electric shock during normal vehicle operation.[10] For the purposes of the GTR, normal vehicle operations include those during driving and charging.

The GTR requirements apply to all high voltage sources (electric components contained or connected to the electric power train that have a working voltage greater than 30 VAC or 60 VDC). It requires these high voltage sources to have all four of the following measures to protect against electric shock during normal vehicle operations: (1) Prevent direct contact of high voltage sources (those operating with voltage greater than 30 VAC or 60 VDC); (2) prevent indirect contact of high voltage sources; (3) electrically isolate the high voltage sources from the electric chassis (500 ohms/volt or higher for AC and 100 ohms/volt or higher for DC sources); and (4) electrical isolation monitoring system for HFCVs that warns the driver in the event of loss in isolation.

The GTR also has the following measures to reduce driver errors that may result in potential unsafe conditions: (1) Indication to the driver when the vehicle is in possible active driving mode at startup and when the driver is leaving the vehicle, and (2) prevent vehicle movement by its own propulsion system when the vehicle charging system is connected to the external electric power supply.

Protection Against Direct Contact With High Voltage Sources

For protection against direct contact with high voltage sources, the GTR has different requirements based on the location of the high voltage source (*i.e.,* if it is in the passenger or luggage compartment of the vehicle or not).

The GTR requires high voltage sources inside the passenger compartment or luggage compartment to be enclosed in protection systems such as solid insulators, electrical protection barriers, and enclosures that cannot be opened, disassembled, or removed without the use of tools and that provide protection degree IPXXD. Protection degree IPXXD is an International Electrotechnical Commission (IEC) specification for protection from direct contact of high voltage sources. IPXXD protection is verified when a standard probe (rigid test wire shown in Figure 1), 100 millimeters (mm) long and 1 millimeter (mm) in diameter, does not contact high voltage components when probed to enter an electrical protection barrier or enclosure.[11]

Figure 1. Standardized test wire (IPXXD)

For high voltage sources not in passenger or luggage compartments,[12] the GTR requires that they be enclosed in protection systems such as solid insulators, electrical protection barriers, and enclosures that cannot be opened, disassembled, or removed without the use of tools, and that provide a protection degree of IPXXB (as opposed to IPXXD, referenced above). Protection degree IPXXB is an IEC specification for protection from direct contact of high

[10] In other words, the focus of this ''in-use'' testing (unlike ''post-crash'' testing, discussed later) deals with performance criteria that would be assessed without first exposing the vehicle to a crash test. This testing is aimed at evaluating what the performance of the vehicle would be under normal operating conditions.

[11] IEC60529 Second edition 1989–11 + Am. 1 1999–11, EN60529, ''Degrees of protection provided by enclosures.''

[12] GTR No. 13 specifies direct contact protection requirements for high voltage connectors (including vehicle inlet) separately.

voltage sources. IPXXB protection is verified when a standard probe (resembling a small human finger), 80 mm long and 12 mm in diameter, does not contact high voltage components when probed to enter an electrical protection barrier or enclosure.[13] (See Figure 2 below.)

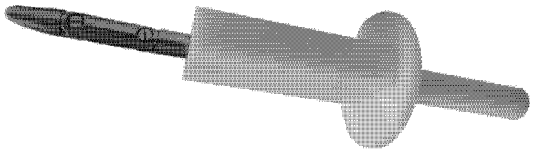

Figure 2. Standardized test finger (IPXXB)

In addition to barriers preventing direct physical contact with high voltage sources, GTR No. 13 also requires protections for the ''service disconnect.'' [14] These provisions protect emergency personnel, persons performing service/maintenance on the vehicle, and vehicle occupants. The GTR requires that a service disconnect (which can be opened, disassembled or removed without tools) be enclosed by protection systems with protection degree IPXXB when the service disconnect is opened, disassembled, or removed.

Further, the GTR requires that high voltage sources be labeled using the symbol shown in Figure 3, below. The interior of the symbol is yellow and the border and arrow symbol are black. This requirement aims to provide a standardized warning regarding the presence of high voltage sources within an enclosure that can be physically accessed, opened or removed without the use of tools. The GTR specifies that the labels need to be on or near electric energy storage/conversion devices and on electrical protection barriers or enclosures of high voltage sources that can be physically accessed, opened, or removed without the use of tools and that are not located underneath the vehicle floor. For connecters of high voltage sources, the GTR makes this requirement optional.

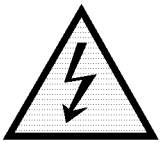

Figure 3. Marking of high voltage sources

In the same vein, the GTR requires cables to have a standardized warning that high voltage cables are present. The GTR requires that cables for high voltage sources, which are not located within enclosures, must have an orange outer covering for identification.

Protection Against Indirect Contact With High Voltage Sources

Indirect contact of high voltage sources [15] may occur when a high voltage source experiences a loss in electrical isolation and the physical barrier or enclosure gets electrically energized. This type of contact could also lead to electrical shock. To address this concern, the GTR requires, first, that exposed conductive parts (parts which may become electrically energized under electrical isolation failure and which can be contacted by a human, such as electrical protection barriers and enclosures) be conductively connected to the electrical chassis such that the resistance between all exposed conductive parts and the electrical chassis is less than 0.1 ohms when there is current flow of at least 0.2 amperes (A).[16] This would ensure that in the event of loss in electrical isolation, no dangerous voltage potentials are produced between exposed conductive parts and the electrical chassis, and therefore very low levels of current would flow through a human body contacting different parts of the vehicle.[17]

Second, GTR No. 13 requires that vehicles whose rechargeable energy storage systems are charged by conductively connecting to an external grounded electric power supply have a device that conductively connects the electrical chassis to the earth ground during charging. This ensures that if there is a loss in electrical isolation of a high voltage source during charging and the vehicle chassis is contacted by a human, the magnitude of current

[13] IEC60529 Second edition 1989–11 + Am. 1 1999–11, EN60529, ''Degrees of protection provided by enclosures.'' This test probe designed to simulate a small human finger (12 mm) conforms to ISO 20653 ''Road vehicles—Degrees of protection (IP-Code)—Protection of electrical equipment against foreign objects, water, and access (IPXXB).''

[14] A service disconnect is a device for deactivation of an electrical circuit when conducting checks and services of the electric battery, fuel cell stack, or other high voltage sources.

[15] Contact of a conductive part which is energized due to loss in electrical isolation of a high voltage source is an indirect contact of the high voltage source.

[16] GTR No. 13 considers this requirement to be met if visual inspection indicates that a conductive connection has been established by welding. NHTSA has concerns about this provision and is requesting comments on it.

[17] Since current flows through the path of least resistance, most of the current flow would be through the chassis rather than through the human body which has a significantly higher resistance.

flowing through the person is very low and in the safe zone.[18]

Protection by Electrical Isolation

GTR No. 13 affords different electrical isolation requirements for AC and DC high voltage sources based on whether they are conductively isolated from each other or conductively linked together.

For AC and DC high voltage sources that are conductively isolated from each other, GTR No. 13 requires isolation resistance between the high voltage source and the electrical chassis to be a minimum value of 100 ohms/volt of the working voltage for DC high voltage sources, and a minimum value of 500 ohms/volt of the working voltage for AC high voltage sources. This requirement is similar to the post-crash electrical isolation requirement currently in FMVSS No. 305. It ensures that in the event high voltage sources are contacted, the current flowing through the body is less than or equal to 10 mA DC or 2 mA AC—which is considered to be safe.[19]

For AC and DC high voltage sources that are conductively connected, GTR No. 13 affords two options. The first option is the vehicle may maintain an isolation resistance between the high voltage sources and the electrical chassis at no less than 500 ohms/volt of the working voltage. The second option is it may provide an isolation resistance between the high voltage sources and the electrical chassis of no less than 100 ohms/volt of the working voltage and provide physical barrier protection for the AC high voltage sources to prevent both direct and indirect contact, as discussed above. (Note that a ''physical barrier'' approach would be a new concept in FMVSS No. 305.)

In addition, GTR No. 13 specifies electrical isolation requirements for charging electric vehicles whose rechargeable energy storage system are charged by conductively connecting to an external power supply. GTR No. 13 requires that the isolation resistance between the electrical chassis and high voltage sources conductively connected to the vehicle inlet which connects to the external power supply to be at least 1 million (M) ohms when the charge coupler is disconnected. This requirement is in accordance with IEC61851–1–2010[20] and International Standards Organization (ISO) 6469–2[21] which prescribe electrical isolation for electric vehicles that connect to the power grid for charging. A typical minimum allowable isolation requirement for a grounded product connected to the power grid is 1000 ohms/volt, which computes to 1M ohms.

Protection by Electrical Isolation Monitoring System

GTR No. 13 also contains provisions for monitoring the electrical isolation under certain conditions. In fuel cell vehicles, GTR No. 13 requires DC high voltage sources (other than the coupling system for charging) to have an on-board electrical isolation monitoring system, together with a warning to the driver if the isolation resistance drops below the minimum required value of 100 ohms/volt. FMVSS No. 305 specifies a similar requirement except that FMVSS No. 305 applies this provision to vehicles that are certified to the 100 ohms/volt electrical isolation option[22] (rather than to fuel cell vehicles specifically).

Protection by Mitigating Driver Error

GTR No. 13 also has provisions for mitigating the likelihood of driver error in operating electric vehicles. First, GTR No. 13 requires that at least a momentary indication be given to the driver when the vehicle is in possible active driving mode.[23] Second, when leaving the vehicle, the driver shall be informed by an optical or audible signal if the vehicle is still in possible active driving mode. The third requirement is that for vehicles where the on-board rechargeable energy storage/conversion device can be charged externally, vehicle movement by its own propulsion system shall not be possible when the external electric power supply is physically connected to the vehicle inlet.

The first requirement does not apply to vehicles with an internal combustion engine that directly or indirectly provides the vehicle's propulsion on startup. Since electric powered vehicles operate quietly, an indication of the vehicle in possible active driving mode would assist the driver in reducing operational errors that could have safety implications. The third requirement prevents the charger from getting ripped out of the vehicle inlet during charging that could cause electrical arcing.

2. Electric Safety Requirements Post-Crash Test

The post-crash[24] electrical safety requirements in GTR No. 13 apply to all high voltage sources (electric components contained or connected to the electric power train that have a working voltage greater than 30 VAC or 60 VDC). GTR No. 13 does not specify the type of crash test and how it is conducted. This is left to each contracting party to develop appropriate crash tests. After the crash test, to provide adequate protection against electric shock, GTR No. 13 affords three potential options that a vehicle manufacturer may use to protect against potential human contact with high voltage sources. GTR No. 13 specifically gives contracting parties the choice not to provide the physical barrier option in their final domestic regulation.

Reduce the Voltage Levels of the High Voltage Sources Such That They Are No Longer High Voltage Sources

Reducing the high voltage sources' voltage to a level below what is considered a ''high voltage source'' means there is no further need to protect against electrical shock from those sources. Thus, in this option, GTR No. 13 requires that the voltages of each high voltage source be reduced to less than or equal to 30 VAC or 60 VDC within 60 seconds after the impact. A version of this option for electrical safety is currently in FMVSS No. 305.

Use a Physical Barrier and Other Techniques To Prevent Direct/Indirect Contact[25] With High Voltage Sources

The physical barrier option protects against electrical shock by preventing

[18] Current will flow through the path of least resistance and therefore most of the current resulting from a loss of electrical isolation would flow through the ground connection rather than through the human body.

[19] *See* IEC TS 60479–1 and TS 60479–2 Effects of Current on Human Beings and Livestock—Part 1: General Aspects, 2005–07, Reference Nos. CEI/IEC/TS 60479–1:2005.

[20] IEC 61851–1:2010 Electric vehicle conductive charging system—Part 1: General requirements, available at *https://webstore.iec.ch/publication/6029.*

[21] ISO 6469–2:2009 Electrically propelled road vehicles—Safety specifications—Part 2: Vehicle operational safety means and protection against failures. Available at *http://www.iso.org/iso/catalogue_detail?csnumber=45478.*

[22] As discussed above, AC high voltage sources are required under FMVSS No. 305 to have at least 500 ohms/volt of electrical isolation. DC high voltage sources may have an electrical isolation of 100 ohms/volt or greater provided that they meet conditions such as having an electrical isolation monitoring system meeting the requirements of the standard.

[23] *I.e.,* the vehicle mode when application of pressure to the accelerator pedal or release of the brake system causes the electric power train to move the vehicle.

[24] In terms of ''post-crash'' we are referring to assessing a vehicle's electrical safety provisions (electrical isolation, physical barrier, etc.) after the vehicle is exposed to specified crash forces in a crash test. This is different from the aforementioned ''in-use'' (or ''normal operating conditions'') requirements where the vehicle is evaluated for conformance with a performance requirement without first being exposed to crash testing.

[25] To reiterate, this option is one that contracting parties may choose not to propose. In other words,

Continued

any human contact (direct or indirect) with the high voltage sources. The physical barrier option for post-crash is similar to the physical barrier option that GTR No. 13 affords for its normal vehicle operation requirement. The requirements state that (post-crash) the vehicle needs to prevent both direct and indirect human contact with high voltage sources through the use of: (1) Physical barriers (*i.e.,* prevent a finger probe test device from contacting any high voltage source); and (2) low resistance conductive connection of the physical barriers to the electrical chassis (*i.e.,* the resistance between all exposed conductive parts and the electrical chassis has to be less than 0.1 ohms when there is a current flow of at least 0.2 A [26]). The only major difference is that GTR No. 13 uses protection degree IPXXB (*i.e.,* the IPXXB finger probe) for its post-crash requirements (rather than IPXXD).[27] As noted earlier, FMVSS No. 305 currently contains no similar provision for electric shock protection through physical barriers.

Electrically Isolate the High Voltage Sources

This option protects against electric shock by ensuring that a sufficient level of electrical isolation resistance is provided for the high voltage source. GTR No. 13 provides two different sets of requirements (based on whether the vehicle's AC and DC high voltage sources are conductively connected) for vehicles electing to use this option to protect against electric shock.

If the AC and DC high voltage sources are conductively isolated from each other, then the minimum electrical isolation of a high voltage source to the chassis is 500 ohms/volt for AC components and 100 ohms/volt for DC components of the working voltage.

If AC and DC high voltage sources are conductively connected, GTR No. 13 requires that electrical isolation of AC and DC high voltage sources be no less than 500 ohms/volt of the working voltage, or the electric isolation of those sources be no less than 100 ohms/volt provided that the AC high voltage sources (in addition to the minimum 100 ohms/volt electrical isolation) meet the reduced voltage level requirements discussed above (first option), or meet the physical protection requirements discussed above in the second option.

We note that while currently FMVSS No. 305 contains different requirements for AC high voltage sources and DC high voltage sources, it does not distinguish requirements based on whether the AC and DC high voltage sources are conductively linked. Thus, while the requirements in GTR No. 13 for AC and DC sources that are not conductively connected are the same as those currently in FMVSS No. 305, the alternative requirements for conductively connected AC and DC sources are not.

c. How does this proposal differ from GTR No. 13?

This NPRM proposes to add electrical safety requirements during normal vehicle operation in GTR No. 13 into FMVSS No. 305. The proposal also adds a modified version of physical barrier protection that is specified in GTR No. 13 as a compliance option for meeting post-crash electrical safety requirements. However, this NPRM does not propose to adopt all the specifications in GTR No. 13. The differences in electrical safety requirements and associated test procedures in the proposal and that in GTR No. 13, along with an explanation for these differences, are provided below. Comments are requested on NHTSA's views.

Physical Barrier Protection During Normal Vehicle Operation

This NPRM proposes to adopt GTR No. 13's physical barrier protection requirement during normal vehicle operation for direct contact. However, for indirect contact protection, we propose to use the proposed post-crash indirect contact protection requirements described above (which include two additional requirements described above in addition to that specified in GTR No. 13).

Verification of Physical Barrier Protection During Normal Vehicle Operations

GTR No. 13 considers indirect contact protection requirements during normal vehicle operations to be met if a galvanic connection [28] has been established by welding between exposed conductive parts and the electrical chassis.

For conditions where the DC and AC high voltage sources are connected during normal vehicle operations, GTR No. 13 permits the AC high voltage sources to have a minimum electrical isolation of 100 ohms/volt provided the AC high voltage sources have either: (a) Double or more layers of solid insulators or electrical protection barriers that meet the requirements for indirect contact protection; or (b) Mechanically robust protections that have sufficient durability over vehicle service life such as motor housings, electronic converter cases or connectors.

These methods of verification consist of mere visual inspection and do not provide sufficient objectivity for use in an FMVSS. Therefore, the agency's proposal does not consider indirect contact protection requirements to be met if galvanic connection has been established between exposed conductive parts and the electric chassis. The agency is also not proposing visual inspection methods to permit AC high voltage sources that are connected to a DC high voltage source to have minimum electrical isolation of 100 ohms/volt during normal vehicle operation.

High Voltage Markings

GTR No. 13 requires marking (yellow high voltage symbol) for enclosures and barriers of high voltage sources (electrical protection barriers) that can be physically accessed, opened, or removed without the use of tools. These markings are not required for electrical protection barriers located underneath the vehicle floor.

NHTSA tentatively concludes that the exclusion is without merit. GTR No. 13 does not provide a justification for exempting electrical protection barriers located underneath the vehicle floor from the high voltage marking requirement. There is also no definition of ''vehicle floor'' in GTR No. 13. NHTSA does not believe electrical protection barriers located under the vehicle floor should be excluded because it is possible that the high voltage sources enclosed by these barriers may be accessed in a rollover crash or during vehicle maintenance.

Direct Contact Protection of Connectors

GTR No. 13 specifies direct contact protection requirements for high voltage connectors separately. Per GTR No. 13, connectors do not need to meet IPXXB protection if they are located underneath the vehicle floor and are provided with a locking mechanism, or require the use of tools to separate the

a contracting party that voted in favor of this GTR may submit this GTR to their domestic rulemaking process affording only two options for protecting against post-crash electrical shock (*i.e.,* reducing the high voltage sources' voltage so that they are no longer considered high voltage; and maintaining the required levels of electrical isolation of the high voltage sources).

[26] GTR No. 13 considers this requirement to be met if visual inspection indicates that conductive connection has been established by welding. The minimum resistance requirement is only evaluated in case of doubt.

[27] Here the post-crash requirements in the GTR use IPXXB because it is assumed unlikely that, post-crash, someone would use a wire to probe the enclosure.

[28] A galvanic connection is a conductive connection.

connector, or the voltage reduces to below 30 VAC or 60 VDC within one second after the connector is separated. NHTSA does not believe connectors of high voltage sources should be excluded. If connectors are high voltage sources and if they can be accessed, opened, or removed without the use of tools, regardless of whether they are located under the floor, they should be required to meet the same requirements for voltage markings and direct contact protection as electric protection barriers. Additionally, the agency notes that ''vehicle floor'' and ''connector'' are not defined in GTR No. 13. Therefore, NHTSA would not exclude connectors of high voltage sources.

Post-Crash Physical Barrier Protection Option

GTR No. 13 specifies that individual contracting parties of the 1998 agreement may elect to propose the physical barrier protection from direct and indirect contact of high voltage sources and live parts. According to GTR No. 13, for protection against direct contact, high voltage sources and live parts are required to have protection degree IPXXB. For protection against indirect contact, GTR No. 13 requires that the resistance between all exposed conductive parts and electrical chassis be lower than 0.1 ohm when there is current flow of at least 0.2 A.

The physical barrier protection option in this NPRM includes the same provisions for direct and indirect contact protection as that in GTR No. 13 but adds two additional requirements for indirect contact protection (from SAE J1766 January 2014).

This first additional requirement is that the resistance between any two simultaneously reachable exposed conductive parts of the electrical protection barriers that are less than 2.5 meters from each other is less than 0.2 ohms. This additional requirement protects against indirect contact of high voltage sources when two electrical protection barriers are contacted simultaneously. The second additional requirement is that the voltages between an electrical protection barrier enclosing a high voltage source and other exposed conductive parts are less than or equal to 30 VAC or 60 VDC. This additional requirement is included in SAE J1766 January 2014 to provide additional protection from indirect contact of high voltage sources, addressing the issues raised in the Battelle research of the physical barrier protection option.

Verification of Post-Crash Indirect Contact Protection

GTR No. 13 states that a high voltage source is considered to have post-crash indirect contact protection if the electrical protection barrier enclosing the high voltage source has a galvanic connection to the chassis by welding. This method of verification is a mere visual inspection and lacks the objectivity needed for an FMVSS. This NPRM does not include this method of verification and instead proposes to use the test procedure in GTR No. 13 whereby a current of 0.2 A is passed through the connection to determine its resistance.

Physical Barrier Protection of AC High Voltage Sources That Are Connected to DC High Voltage Sources

This NPRM proposes to adopt the physical barrier protection requirement for direct contact specified in GTR No. 13 for both post-crash and during normal vehicle operation. However, for indirect contact protection, the proposal uses the proposed post-crash indirect contact protection requirements described above (which include two additional requirements described above in addition to that specified in GTR No. 13).

Optional Procedures for Evaluating Electrical Isolation Post-Crash

FMVSS No. 305's test procedure for measuring electrical isolation of high voltage sources is similar to that in GTR No. 13. However, GTR No. 13 permits the crash tests to be conducted without energizing the electric power train while FMVSS No. 305 does not. In conditions where the high voltage sources are not energized during the crash test, GTR No. 13 permits measuring electrical isolation resistance of high voltage sources by other means, including using a megohmmeter.[29] Yet, GTR No. 13 does not specify a test procedure to measure isolation resistance using a megohmmeter.

NHTSA is not proposing to conduct the crash test without energizing the electric power train and so is not permitting the use of the megohmmeter. NHTSA stated its position on this matter in final rules published on June 14, 2010 (75 FR 33515), July 29, 2011 (76 FR 45436), and January 16, 2015 (80 FR 2320). In the January 16, 2015 final rule, NHTSA noted that the agency's research on the feasibility of using a megohmmeter for measuring electrical isolation presented certain technical questions that need to be resolved (*i.e.,* the research showed that megohmmeters could accurately measure electrical isolation resistance of DC high voltage sources in an inactive state but did not consistently do so for AC high voltage sources).

Additionally, electrical isolation resistance measurement with a megohmmeter is only possible when the electrical power train is not energized, such as when an inert gas is used in hydrogen containers of a fuel cell vehicle. NHTSA will address the issue of the use of inert gas in hydrogen containers of fuel cells vehicles when conducting crash tests in a future proposal to incorporate into FMVSSs the fuel system and fuel container integrity requirements of hydrogen fuel cell vehicles in GTR No. 13. The agency will address in that rulemaking the use of alternative methods of measuring isolation resistance in conditions where the electric power train is not energized in crash tests.

Procedures for Measuring Voltage Post-Crash

FMVSS No. 305 specifies that all post-crash voltage measurements for determining voltage and electrical isolation of high voltage sources with respect to the electric chassis be made after a minimum of 5 seconds after the vehicle comes to rest following impact. GTR No. 13 specifies that for determining post-crash electrical isolation of high voltage sources, the voltage measurements be made after a minimum of 5 seconds after ''impact.'' GTR No. 13 also specifies that for determining post-crash voltage (for assessing compliance with the low voltage option), the voltage measurements be made after a minimum of 5 seconds and no later than 60 seconds after impact.

The agency is not proposing to change the timing of voltage measurement post-crash in FMVSS No. 305 to harmonize with GTR No. 13. The ''after impact'' interval specified in GTR No. 13 appears less objective than FMVSS No. 305's measure and adopting the GTR No. 13 specified time for post-crash voltage measurement may reduce the objectivity of the test. Further, all-in-all we believe this difference in the timing of voltage measurement in FMVSS No. 305 and GTR No. 13 is minor.

[29] A megohmmeter is a specialized ohmmeter that is primarily used to determine electrical isolation resistance. This device operates by applying a voltage or current to the item being tested. Because externally applied voltages or currents can disrupt its measurement (and/or cause damage to the instrument) the megohmmer is used to test items that are under an inactive and fully de-energized state.

Miscellaneous Differences Between the Proposed Regulatory Text and GTR No. 13

There is some unnecessary or redundant text in some sections of GTR No. 13 that we have not included in this proposal, to make the regulatory text more concise. An example of this is in the electrical isolation option for post-crash electrical safety, under conditions when the AC and DC high voltage sources are connected. GTR No. 13 specifies that the vehicle meet one of the following requirements: (1) Electrical isolation of the DC and AC high voltage sources from the chassis be no less than 500 ohm/volt; (2) electrical isolation of the DC and AC high voltage sources from the chassis be no less than 100 ohm/volt and the AC high voltage sources also have physical barrier protection; or (3) electrical isolation of the AC and DC high voltage sources from the chassis be no less than 100 ohm/volt and the AC high voltage source is considered as a low voltage source. We believe that the option (3) requirement above is unnecessary, because if the AC high voltage source is considered as a low voltage source, it already meets the low voltage electrical isolation option. Thus, we determined it is not necessary to provide option (3).

IV. Battelle Study and Developments

NHTSA initiated a research program in 2010, using Battelle as a contractor, to better understand the safety implications of using a physical barrier to protect against electric shock. The objectives of the research were to: (a) Determine failure modes associated with electrical protection barriers that could potentially result in electric shock to occupants in the vehicle or to rescue workers due to direct or indirect contact, (b) evaluate the practicability and feasibility of test procedures in what was then a draft version [30] of GTR No. 13 for direct and indirect contact protection.

As discussed below (and in our supporting technical document) [31] the Battelle research indicates that the physical barrier protection specified in GTR No. 13 would protect against electric shock when there is a single point failure in the electrical safety systems. However, if there were multiple failures in the electrical safety systems specified in GTR No. 13 for normal vehicle operating conditions,[32] the Battelle research indicates that a person could receive an electric shock when they contact the high voltage sources in certain specific ways.

The Battelle study [33] identified various scenarios of electrical safety system failures, including direct contact of high voltage source, indirect contact of live parts of high voltage sources, loss in conductive connection between electrical protection barrier and chassis, and a combination of these failures. Direct contact of a high voltage source could occur in the event of a crash that results in mechanical failure of protection barriers or penetration of electrical insulation that would allow fingers or conductive tools to enter protection barriers and contact the high voltage sources within the barrier. Indirect contact of high voltage sources could occur in the event of a crash in which an electrical protection barrier is energized due to loss in electrical isolation of the high voltage source within the barrier.

To illustrate failure modes associated with electric protection barriers, Battelle used the schematic shown in Figure 4 below in which a high voltage source (shown on the left side of the figure) is isolated from the vehicle chassis by resistances R_{iH} and R_{iL} on the positive and negative side, respectively, and enclosed in an electrical protection barrier (EPB_1). The high voltage source may be either DC or AC and may represent a variety of components such as a fuel cell, battery, motor, or capacitor.

Also shown in Figure 4 are electrical wirings from the positive side of the high voltage source to its negative side to complete the circuit. The schematic shows two electric protection barriers (EPB_2 and EPB_3) enclosing the wirings on the positive and negative side, respectively, and a body with resistance R_b contacting these two protection barriers. All three electrical protection barriers in the figure are conductively connected to the electrical chassis with resistances R_{Ch}, R_{ChH}, and R_{ChL}.

For normal vehicle operation, GTR No. 13 requires R_{iH} and R_{iL} resistances to provide electrical isolation of at least 500 ohms/VAC or 100 ohms/VDC. It also requires the electrical wiring to be insulated. Further, it requires the three electrical protection barriers (EPB_1, EPB_2, and EPB_3) to have protection degree IPXXD or IPXXB and be conductively connected to the chassis such that the resistances R_{Ch}, R_{ChH}, and R_{ChL} are less than 0.1 ohms. The lowest possible value of body resistance R_b is 500 ohms.[34]

[30] The electrical safety requirements in the 2010 draft version of GTR No. 13 are the same as those in the GTR No. 13 that was established on June 27, 2013. Henceforth, we refer to the draft version as the adopted GTR.

[31] Along with this document, we have placed in the docket a supporting technical document providing further information on our analysis of the Battelle research and GTR No. 13.

[32] Under GTR No. 13, during normal vehicle operation, all high voltage sources contained or connected to the power train are required to be electrically isolated from the chassis (with minimum electrical isolation of 500 ohms/VAC or 100 ohms/VDC) and enclosed by physical barriers that prevent direct human contact. The physical barriers enclosing these high voltage sources are required to be conductively connected to the chassis (with resistance less than 0.1 ohms) to provide indirect contact shock protection.

[33] Hydrogen Fuel Cell Vehicle—Electrical Protective Barrier Option, Final Report, DOT HS 812134, May 2015. Available at *http://www.nhtsa.gov/Research/Crashworthiness/Alternative%20Energy%20Vehicle%20Systems%20Safety%20Research* and in the docket for this NPRM.

[34] IEC TC–60479–I, ''Effects of current on human beings and livestock—Part I—General Aspects,'' 2005.

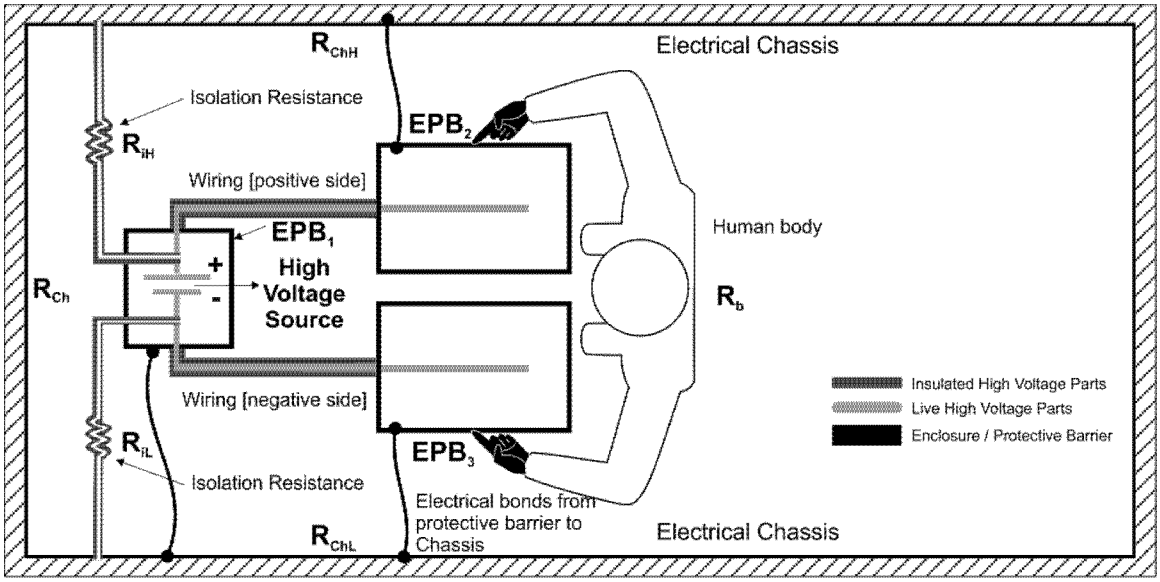

Figure 4. Schematic of body contact with electrical protection barriers

Battelle's analysis of the schematic in Figure 4 identified scenarios of direct contact and indirect contact of high voltage sources. Direct contact occurs when the electrical protection barriers EPB_2 and/or EPB_3 are breached or penetrated and the body contacts the wiring enclosed within. Indirect contact occurs when EPB_2 and/or EPB_3 are energized due to loss of electrical isolation of the high voltage source within the barrier and the body contacts the electrical protection barriers as shown in Figure 4. Examples of direct and indirect contact scenarios are presented below:

• Case 1—Direct contact of high voltage source without electric shock hazard. Protection barrier EPB_2 is compromised and the body directly contacts the electrical wiring from the positive side, and also contacts the electrical protection barrier EPB_3 enclosing the wiring on the negative side of the high voltage source (Figure 5). In this case, as long as the resistance R_{iL} or R_{iH} is greater than or equal to 500 ohms/VAC or 100 ohms/VDC, the current through the body (shown by dashed lines) will be within safe limits.

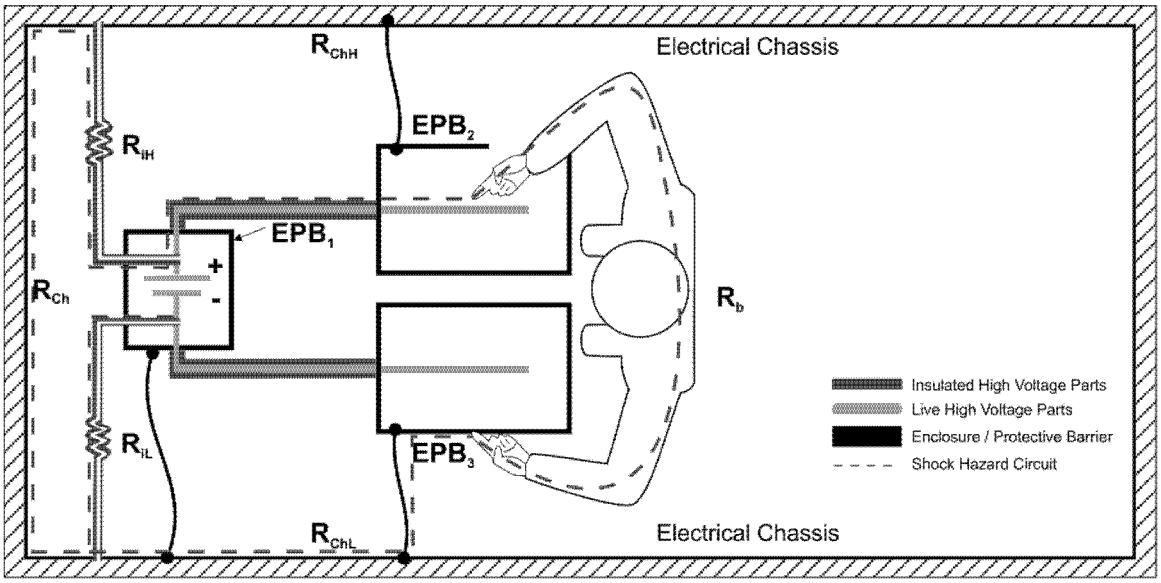

Figure 5. Case 1 - Direct contact of wiring on positive side of high voltage source and contact with electrical protection barrier (EPB_3) of the wiring on the negative side.

• Case 2—Direct contact of a high voltage source with electric shock hazard. Electrical protection barriers EPB_2 and EPB_3 of the wiring on the positive and negative side of the high voltage source are compromised and the body contacts the positive and negative wiring (Figure 6). For the worst Case 2 condition, a body resistance R_b equal to 500 ohms (lowest possible) is used. For a DC high voltage source of 350V, the minimum resistance value for R_{iL} and R_{iH} is 35,000 ohms. Since the body resistance R_b is significantly lower than the electrical isolation R_{iL} and R_{iH},

current through the body (shown by dashed lines) is not limited and the body would experience electric shock.

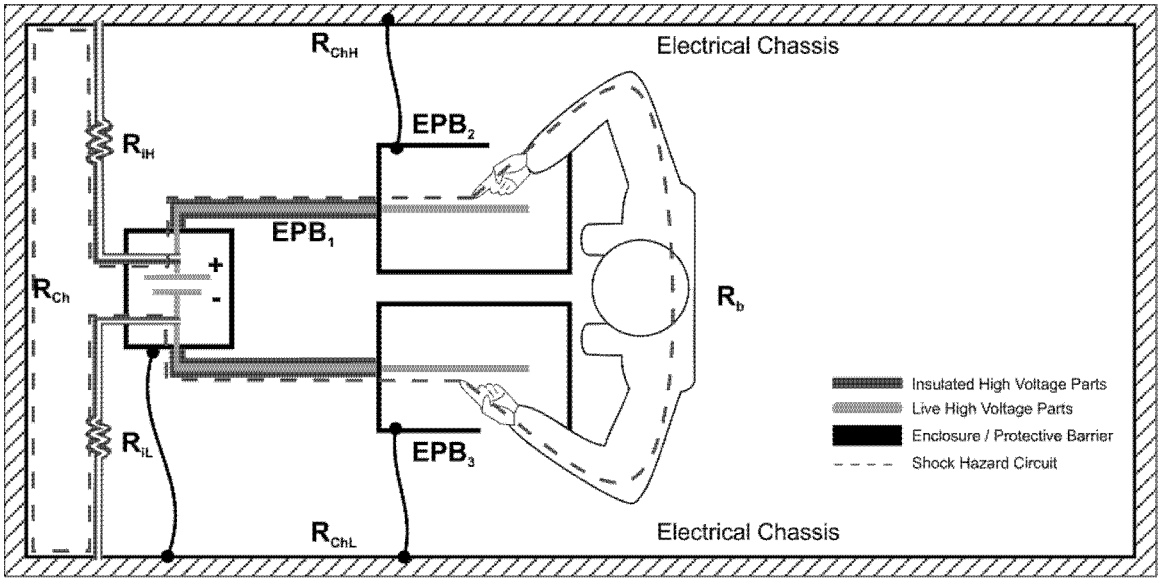

Figure 6. Case 2 - Direct contact of wiring on positive and negative side of high voltage source due to compromise (breaching or penetration) of electrical protection barriers EPB_2 and EPB_3.

• Case 3—Indirect contact of high voltage source without electric shock hazard. The wiring on the positive side of the high voltage source loses electrical isolation to the electrical protection barrier, EPB_2, and the body contacts the electrical protection barriers EPB_2 and EPB_3 of the positive and negative wiring (Figure 7). Similar to Case 1, as long as the isolation resistance R_{iL} or R_{iH} is greater than or equal to 500 ohms/VAC or 100 ohms/VDC, the current through the body (shown by dashed lines) will be within safe limits.

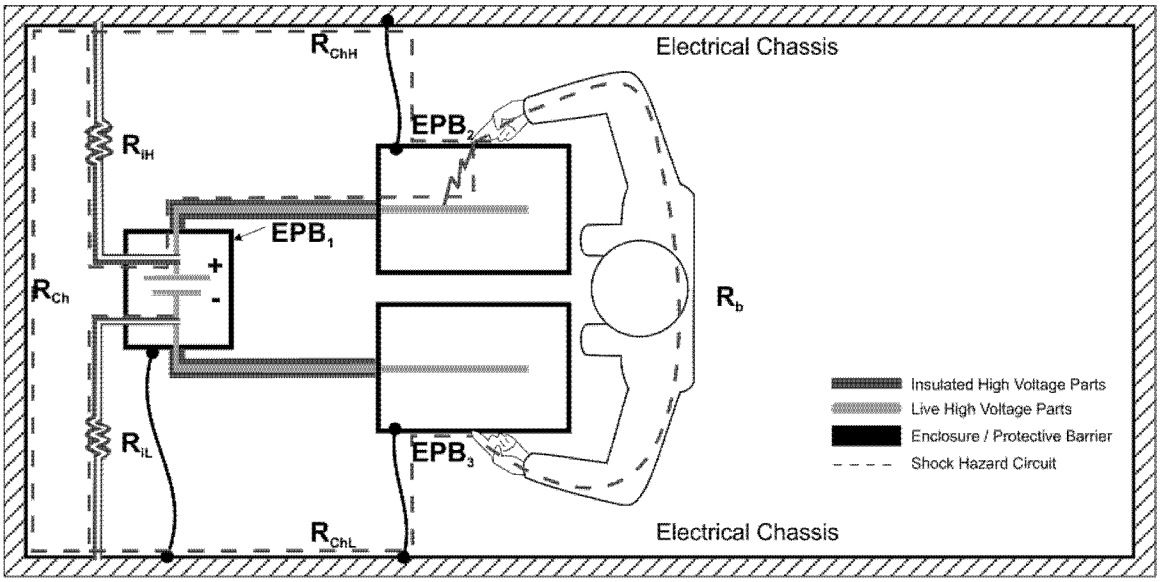

Figure 7. Case 3 - Wiring on positive side of the high voltage source loses electrical isolation to the protective barrier EPB_2 and the body contacts protective barriers EPB_2 and EPB_3.

• Case 4—Indirect contact of high voltage source with possibility of electric shock. The electric wiring of the positive and negative sides of the high voltage source lose electrical isolation to the protective barriers EPB_2 and EPB_3, respectively, and the body contacts the two protective barriers EPB_2 and EPB_3 (Figure 8). Since R_{Ch}, R_{ChH} and R_{ChL} are all very low values (less than 0.1 ohms according to GTR No.13), this condition would result in a short circuit of the high voltage source that could activate and open a short circuit fuse that is generally equipped in electric

propulsion vehicles. If a fuse activates, then no current will flow and so no electrical shock would occur. However, if the fuse does not activate, and if the electrical isolation R_{iL} and R_{iH} are reduced to low levels and the chassis resistance is not significantly low compared to the body resistance, then the current through the body contacting the protective barriers (shown by dashed line) may not be within safe limits and the body could experience electric shock. This scenario is further discussed in the Alliance petition for rulemaking (*infra*) and in the supporting technical document of this NPRM.

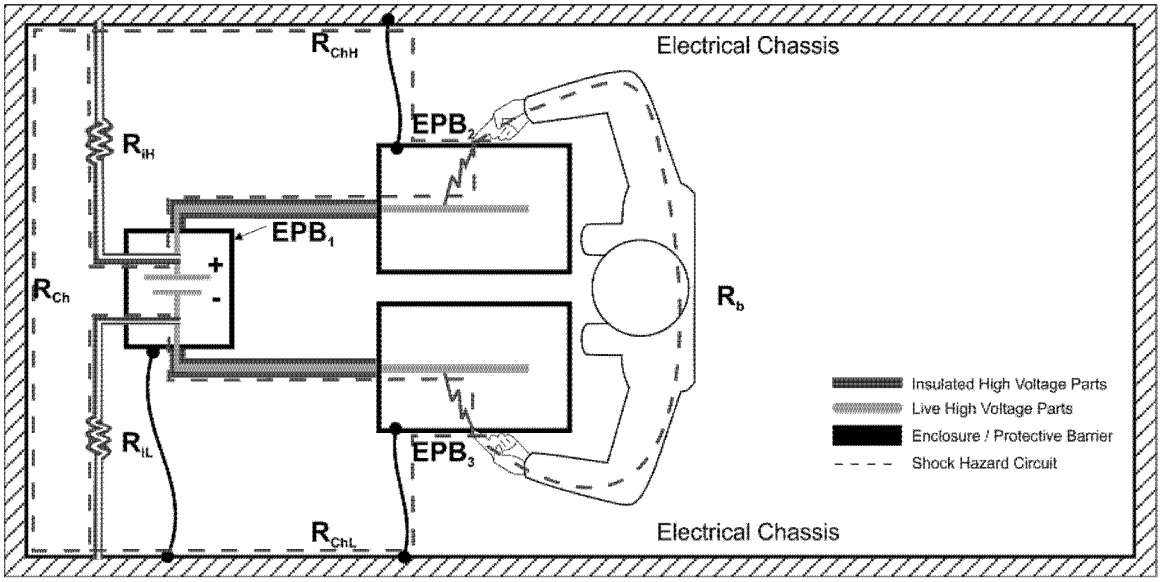

Figure 8. Case 4 - Wiring on positive and negative side of the high voltage source lose electrical isolation to the protective barriers EPB_2 and EPB_3, respectively, and the body contacts protective barriers EPB_2 and EPB_3.

Battelle identified additional scenarios, including those regarding loss in electrical isolation R_{iL} and/or R_{iH} and loss of electrical bonding of the protective barriers with the chassis.[35] These scenarios showed that, for vehicles that meet the electrical isolation and physical barrier protection requirement in GTR No. 13 during normal vehicle operation, electric shock is not possible when there is only a single point of failure in the electrical safety systems. However, electric shock is possible when at least two or three failures of electrical safety systems occur and a human body comes into contact with two compromised protective barriers on opposite sides of the high voltage source to complete the circuit. For example, in Case 2, electric shock could occur if two electrical protection barriers on the positive and negative side of the high voltage source are compromised and a body contacts the positive and negative side of a high voltage source by entering the two compromised protection barriers. In Case 4, electric shock could occur only if at least four electric safety features (loss in electrical isolation of electrical protection barriers EPB2 and EPB3 which are on the positive and negative side of the high voltage source and loss in electrical isolation RiH and RiL of the high voltage source) are compromised and the body contacts both compromised barriers, EPB2 and EPB3.

To address the concern of electric shock from indirect contact, GTR No. 13 specifies that the physical barriers enclosing high voltage sources should be conductively connected with low resistance (less than 0.1 ohms) to the electrical chassis, so that if one segment of the high voltage source should lose electrical isolation, all contactable surfaces of the vehicle chassis and protective barriers will be at the same voltage and thereby prevent electric shock to a person touching two different protective barriers or parts of the electrical chassis.

Battelle also evaluated the maximum resistance (0.1 ohms) of the electric bonds between electrical protection barriers and the electrical chassis that is specified in GTR No. 13. Battelle found that in the event of multiple electrical safety system failures (loss in electrical isolation of both segments of the high voltage source to their electrical protection barriers) and a person touching both the barriers to complete the circuit, the resistance of 0.1 ohms between the protective barrier and electrical chassis would not be sufficient to prevent electric shock to the person contacting the protective barriers.[36]

V. Toyota Petition for Rulemaking

On December 23, 2013, Toyota submitted a petition for rulemaking to amend FMVSS No. 305 by adding an additional compliance option for electrical safety to allow HFCVs to be offered for sale in the US. Toyota notes that the requested compliance option includes elements of the electrical protection barrier that is currently in GTR No. 13. Toyota notes that many countries, including the European Union, Japan, and South Korea, already include electrical protection barrier as a compliance option for electrical safety in their standards.

Toyota explains its reasons for petitioning as follows.[37] FMVSS No. 305

[35] Details of these scenarios are presented in the Battelle final report, DOT HS 812 134, May 2015, which is available in the docket of this NPRM.

[36] This issue is further explained in the supporting technical document in the docket of this NPRM.

[37] Honda Motor Co. Ltd. and American Honda Motor Co. Inc. (Honda) echoed these concerns in its comments on NHTSA's notice of receipt of Toyota's

Continued

requires compliance with electrical safety requirements following impacts ''at any speed up to and including'' the specified test speeds. Toyota notes that for electric powered vehicles, including fuel cell vehicles, the DC high voltage sources (*e.g.* high voltage battery) will be connected to the AC high voltage sources (*e.g.* electric motor) during normal vehicle operation and in low speed crashes where the automatic disconnect does not operate.[38] In such conditions, when the AC and DC high voltage sources are connected, the isolation resistance at the AC high voltage source is in parallel with the isolation resistance of the DC high voltage source. Therefore, even if the electrical isolation provided for the AC high voltage source is significantly greater than the required 500 ohms/volt, the effective isolation resistance measured at the AC high voltage source can be, at most, as high as that provided for the DC high voltage source.

Toyota explains that in current battery electric vehicles, manufacturers are able to provide electrical isolation for the high voltage battery in excess of 500 ohms/volt, even though FMVSS No. 305 permits DC high voltage sources to have 100 ohms/volt with an electrical isolation monitoring system. On the other hand, it is difficult to maintain electrical isolation greater than 500 ohms/volt for the fuel cell stack in an HFCV due to the presence of fuel cell coolant.[39] Therefore, when the DC and AC high voltage sources are connected in an HFCV, it may not be possible to achieve the required 500 ohms/volt electrical isolation for AC high voltage sources.

Toyota states that NHTSA said in the June 14, 2010 final rule (75 FR 33515) that the agency was issuing the final rule to facilitate the development and introduction of fuel cell vehicles. One provision provided by the final rule was to specify lower minimum electrical isolation requirements for DC than AC high voltage sources (500 ohms/volt for AC and 100 ohms/volt for DC sources). Toyota further asserts that this flexibility offered for HFCVs is not useful unless a provision is made for the condition when the AC and DC high voltage sources are connected, such as after a low speed crash.[40] Since such a provision is currently not available, HFCVs are essentially required to provide electrical isolation levels at or in excess of 500 ohms/volt at the fuel cell stacks.

Toyota asks that NHTSA adopt an alternative provision for electrical safety through isolation of high voltage sources that involves electrical protection barriers to address post-crash conditions where the AC and DC high voltage sources are connected. The petitioner suggests adopting GTR No. 13's specification that the electrical isolation of the high voltage source may be greater or equal to 100 ohms/volt for an AC high voltage source if that AC source is conductively connected to a DC high voltage source, provided that the AC high voltage source meets the specified post-crash physical barrier protection requirements in GTR No. 13.[41] The petitioner suggests specific regulatory text for the requirements and test procedures that are based on the specifications in GTR No. 13 for modifying FMVSS No. 305 to include the petitioner's requested compliance option.

Toyota also requests that NHTSA amend S6.4 of FMVSS No 305 which requires vehicles to satisfy all of the post-crash performance requirements ''after being rotated on its longitudinal axis to each successive increment of 90 degrees . . . . .'' to indicate that compliance with electrical isolation and physical barrier protection requirements would be evaluated after the vehicle is rotated a full 360 degrees. Toyota notes that the vehicle conditions related to the electrical isolation and physical barrier protection requirements do not change at various increments of a rollover and that it would be unreasonably dangerous for laboratory personnel to conduct the specified tests with the vehicle at 90 degree increments.

VI. Alliance Petition for Rulemaking

On November 10, 2014, the Alliance submitted a petition for rulemaking to update and upgrade FMVSS No. 305 to incorporate a physical barrier compliance option to provide protection against electric shock. The Alliance states that the implementation of a physical barrier compliance option is especially critical to facilitate both the introduction of complying HFCVs as well as 48 volt mild hybrid technologies.[42] The petitioner also believes the amendments would enable safe design innovation for all electrified vehicles, as well as reduce CO_2 emissions and increase fuel economy.

The Alliance states that the physical barrier compliance option is essential for FMVSS No. 305 certification of HFCVs in low speed crashes where the automatic disconnect is not designed to operate. The Alliance also states that in such crashes, the DC high voltage source can impinge on the AC high voltage sources through the inverter, making it impractical to achieve 500 ohms/volt electrical isolation for the AC high voltage source.

The Alliance explains that while it would seem that 48 volt mild hybrid systems would not be within the intended scope of FMVSS No. 305,[43] these systems typically convert DC voltage into three-phase AC voltage that can exceed the 30 VAC voltage threshold for consideration as a high voltage source in FMVSS No. 305.[44] The

exemption petition, *supra.* See Docket No. NHTSA–2014–0068.

[38] Toyota noted that the automatic disconnect mechanism is not activated in low speed crashes, such as minor fender benders that may occur in a parking lot and in conditions where the inverters in the fuel cell auxiliary system may continue to operate.

[39] The fuel cell coolant may get ionized during repeated operation and may reduce the electrical isolation provided.

[40] FMVSS No. 305 requires that the electrical safety requirements in FMVSS No. 305 be met after front, rear, and side crash tests that include low speeds. In such conditions (which includes ''fender benders''), the automatic disconnect is designed to remain closed so that the vehicle remains operational and so the driver can continue driving the vehicle.

[41] The requirements for post-crash physical barrier protection option for electrical safety in GTR No. 13 are that after a crash test, high voltage sources have protection level IPXXB and that the resistance between all exposed conductive parts and the electrical chassis be lower than 0.1 ohm when there is a current flow of at least 0.2 amperes.

[42] 48 volt mild hybrid systems are generally internal combustion engines and a 48 volt battery equipped with an electric machine (one motor/generator in a parallel configuration) allowing the engine to be turned off whenever the car is coasting, braking, or stopped, yet restart quickly. These mild hybrids may employ regenerative braking and some level of power assist to the internal combustion engine, but do not have an exclusive electric-only mode of propulsion.

[43] FMVSS No. 305 considers electrical sources operating at voltages greater than or equal to 30 VAC or 60 VDC as high voltage sources that are subject to FMVSS No. 305 electrical safety requirements.

[44] We have also considered information provided by Mercedes-Benz in a briefing to the agency on June 2, 2015. As explained by Mercedes-Benz, the AC–DC inverter converts the DC current from the 48 V battery into AC for the 3-phase AC motor. Mercedes-Benz showed that the voltage between the electrical chassis and each of the phases of the AC electric motor is switched DC voltage (voltage between 0 and 48 volts). Since that voltage is less than 60 volts, it is considered low DC voltage under FMVSS No. 305. However, Mercedes-Benz noted that the voltage between two phases of the AC motor is AC, and may be slightly greater than 30 VAC under certain circumstances, which can be considered a high voltage AC source under the standard. Mercedez-Benz explained its view that physical barrier protection around the AC motor, and around cables from the inverter to the motor, would mitigate human contact with these AC high voltage sources, and thereby mitigate the likelihood of electric shock. Additionally, the presenter showed that electrical protection barriers enclosing the AC high voltage sources could be conductively connected to the chassis with resistance less than 0.1 ohms, and thereby provide electric shock protection from indirect contact of the high voltage sources. See the memorandum in the docket for this NPRM on Mercedes-Benz, Daimler AG, input on 48 V mild hybrid systems.

Alliance states that these 48 volt mild hybrid systems are grounded to the vehicle chassis and so cannot viably meet the existing isolation resistance option as well as the pretest measurement for isolation resistance. The Alliance notes that while it is feasible to design a 48 volt mild hybrid system that meets FMVSS No. 305 electrical isolation requirements, isolated systems inherently involve more complexity, higher consumer costs, and higher mass resulting in reduced fuel economy and increased emissions. The Alliance suggests that these results are particularly inappropriate since there is no incremental safety benefit provided by an isolated system compared to physical barriers. The Alliance states that as a result, it is requesting modifications to FMVSS No. 305 to permit the introduction 48 volt mild hybrid systems and HFCVs into the U.S.

The Alliance notes that in NHTSA's July 29, 2011, response to petitions for reconsideration of the 2010 final rule,[45] NHTSA deferred consideration of the physical barrier protection option pending additional research. The Alliance states that the agency's research on the physical barrier option [46] showed that electric shock from indirect contact in a crash could only be possible, if the following conditions were met (see Case 4 described above and illustrated in Figure 8):

(1) A loss of electrical isolation within the enclosure of a high voltage source,

(2) a loss of electrical isolation within a second (different) high voltage source enclosure,

(3) these two distinct losses in isolation (specified in (1) and (2)) occur on opposite rails (positive and negative) of the high voltage source,

(4) the overcurrent devices do not automatically open the circuit as a result of the simultaneous loss of isolation on the positive and negative rails to ground (the Alliance states that the normal design practice is for the overcurrent devices to automatically open under the circumstances outlined in (3)),

(5) a person has access to these two enclosures in the crashed vehicle, and

(6) a person touches these two enclosures simultaneously.

The Alliance believes that the likelihood of each of the above 6 events occurring is remote and that the simultaneous occurrence of these events in real world situations is even more remote and exceedingly small. The Alliance believes that the other scenarios identified in the Battelle final report as having potential safety concerns similarly require multiple failures in the system to occur, followed by what the petitioner believes to be unlikely human contacts and a lack of fuses or other electrical safety protection. Nevertheless, the Alliance states that, despite the extremely low likelihood of a safety issue from any of the scenarios in the final Battelle report, the updated version of SAE J1766 (January 2014) [47] includes performance requirements that safeguard against all safety critical scenarios identified in the Battelle report.

The Alliance expresses its support of the December 23, 2013 petition for rulemaking from Toyota to modify FMVSS No. 305 to facilitate the sale of HFCVs in the U.S. (petition discussed *infra*) and notes that the January 2014 version of SAE J1766 also includes provisions for a modified isolation requirement for AC systems with physical barriers, as Toyota requests in its petition for rulemaking. The Alliance states that SAE J1766 January 2014 also has provisions for a ''stand-alone'' physical barrier protection compliance option that is needed for facilitating the development of 48 volt mild hybrid systems, since electrical components of these systems are conductively connected to the chassis and so cannot viably satisfy electrical isolation requirements. The Alliance believes that this ''stand-alone'' physical barrier compliance option provides sufficient protection to address potential (although unlikely, states the petitioner) safety critical scenarios identified in the Battelle report.

The Alliance asserts that while FMVSS No. 305 only evaluates electrical safety in post-crash condition, auto manufacturers also design for high voltage safety under normal operating conditions. The petitioner states that providing physical barriers is the most common method of protection against high voltage contact in the automotive industry, as well as other industries that use high voltage electric circuits. The Alliance believes it is reasonable that this method of protection against electric shock hazard can also be used for post-crash shock protection provided these physical barriers remain intact post-crash, and that either the voltage between exposed conductive parts is below 30 VAC or 60 VDC, or resistance between exposed conductive parts of the barriers and electrical chassis is below specified resistance levels.

The Alliance states it is urgent to update FMVSS No. 305 to facilitate the introduction of HFCVs and 48 volt mild hybrid technology vehicles that are necessary to accommodate compliance with Corporate Average Fuel Economy (CAFE) standards. Consequentially, the petitioner states that it is not additionally requesting adoption of the low energy compliance option that is also included in SAE J1766 January 2014. Instead the petitioner requests that the low energy compliance option be considered for the electric vehicle safety (EVS) GTR that is currently in process.

SAE J1766 January 2014 also changes the time criterion for initiating verification of post-crash electrical safety from 5 seconds after the vehicle comes to rest (similar to the specification currently in FMVSS No. 305) to 10 seconds after initial impact. The Alliance states that given the urgency necessary to facilitate the introduction of HFCVs and 48 volt mild hybrid technology, it is limiting its petition for rulemaking to only include the post-crash physical barrier protection compliance option in SAE J1766 January 2014 into FMVSS No. 305.

Specifically, the Alliance requests including section 5.3.4 of SAE J1766 January 2014 into FMVSS No. 305. This section provides two options for post-crash electrical safety by means of physical barriers.

The first option (Option 1 for physical barrier protection) is similar to the post-crash physical barrier protection option for electrical safety in GTR No. 13,[48] but includes an additional requirement that the resistance between the high voltage source enclosed by the physical barrier and the exposed conductive parts of the electrical protection barrier be greater than 0.01 ohms/volt for DC high voltage sources and 0.05 ohms/volt for AC high voltage sources.

The second option for electrical safety through electrical protection barriers (Option 2 for physical barrier protection) in SAE J1776 January 2014

[45] 76 FR 45436.

[46] ''Hydrogen Fuel Cell Vehicle—Electrical Protective Barrier Option,'' DOT HS 812134, May 2015, is available at *http://www.nhtsa.gov/Research/Crashworthiness/Alternative%20Energy%20Vehicle%20Systems%20Safety%20Research* and in the docket for this NPRM.

[47] SAE J1766, ''Recommended practice for electric, fuel cell, and hybrid electric vehicle crash integrity testing,'' January 2014, SAE International, *http://www.sae.org.*

[48] Protection against direct contact with high voltage sources is provided by protection degree IPXXB and protection against indirect contact of high voltage sources is provided by requiring the resistance between exposed conductive parts and the electrical chassis to be lower than 0.1 ohm when there is a current flow of at least 0.2 amperes.

is through protection from direct contact by protection degree IPXXB, and that the voltage between the electrical protection barrier and other exposed conductive parts and the electrical chassis is less than or equal to 30 VAC for AC high voltage sources and 60 VDC for DC high voltage sources. The Alliance states that Option 2 is similar to the low voltage option already in FMVSS No. 305.

The Alliance supplemented its petition by a submission dated October 20, 2015, which provided an analysis of its proposal for electrical safety through physical barriers.[49] Figure 9, below, presents the circuit diagram the petitioner provided for the representation of a high voltage source (*e.g.,* battery) with voltage of 1,000 VAC or 1,500 VDC, enclosed in physical barriers that are conductively connected to the electrical chassis with resistance less than or equal to 0.1 ohms. The circuit diagram also has a representation of a human body with a minimum resistance of 500 ohms[50] contacting protective barriers enclosing opposite rails of the high voltage source. The resistances R_1 and R_2 in Figure 9 represent the resistance between the high voltage source and the protective physical barriers that enclose it. This circuit diagram is a representation of the indirect contact Battelle scenario, Case 4, in the event that electrical isolation of the high voltage source to the chassis is lost and R_{iH} and R_{iL} are equal to zero.

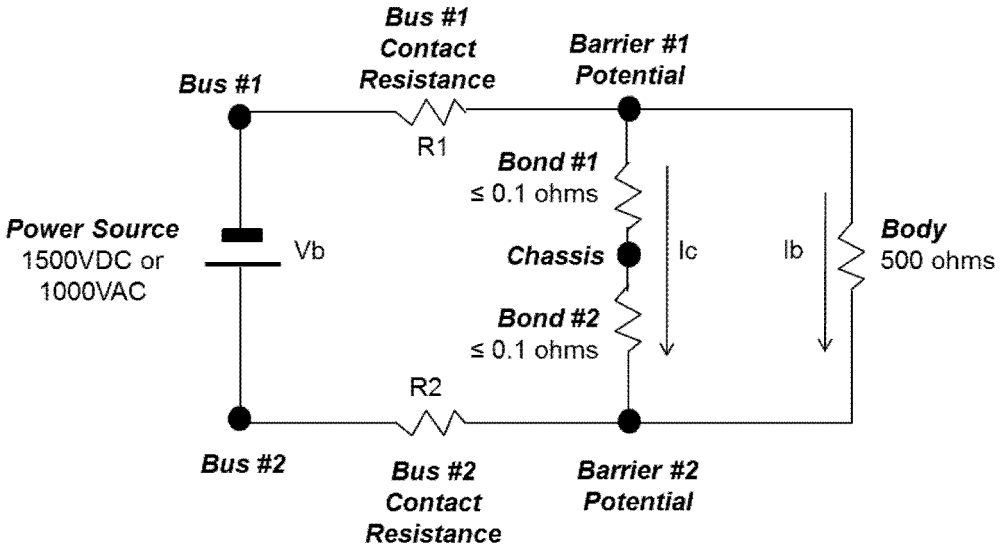

Figure 9. Circuit diagram representing a high voltage source enclosed by physical barriers that are conductively connected to the electrical chassis with resistance less than or equal to 0.1 ohms. R1 and R2 are the resistances between the high voltage source and the protective barriers. The circuit also has a representation of a human body touching the protective barriers of the opposite rails of the high voltage source.

According to Option 1 of the electrical protection barrier in the Alliance submission, the combined resistance[51] of R1 and R2 is required to be less than or equal to 0.05 ohms/VAC or 0.01 ohms/VDC. Under Option 2, the voltage difference between barrier #1 and barrier #2 is required to be less than or equal to 30 VAC or 60 VDC. The Alliance observes that its analysis using the model in Figure 9 demonstrates that the proposed physical barrier protection option provides equivalent levels of safety as the electrical isolation option[52] currently in FMVSS No. 305 in all the safety critical scenarios identified in the Battelle study, including the scenario Case 4 for indirect contact.

The Alliance also states that the Option 1 electrical protection barrier is the same as that of Option 2 since the conditions that meet the Option 1 requirements also meet the Option 2 requirements. The Alliance acknowledges that it is difficult to measure the resistance between a high voltage source and the exposed conductive parts of the electrical protection barrier that encloses the high voltage source, as is needed to evaluate the Option 1 electrical protection barrier.[53] The Alliance recommends that NHTSA incorporate Option 2 (direct contact protection degree IPXXB and voltage between electrical protection barrier and exposed conductive parts less than or equal to 30 VAC or 60 VDC) into FMVSS No. 305 since its analysis indicates that compliance with Option 1 would also entail compliance with Option 2.

The Alliance specifies the following test procedures from Appendix C in SAE J1766 January 2014: (1) Section C.1 for verifying IPXXB protection degree of physical barriers, which is similar to the procedure in GTR No. 13, (2) Section C.2.1 for verifying that the resistance between electrical protection barriers and electrical chassis is less than 0.1

[49] The Alliance analysis of the physical barrier protection option proposed for electrical safety (October 2014) is in the docket of this NPRM.

[50] According to IEC TC–60479–I, ''Effects of current on human beings and livestock—Part I—General Aspects,'' 2005, the lowest possible electrical resistance of a human body is 500 ohms.

[51] R1 and R2 resistances are in a parallel configuration.

[52] The current through the body Ib (shown in Figure 9) is less than or equal to 10 mA of direct current or 2 mA of alternating current.

[53] The resistance level is too low to measure accurately and in order to access a high voltage source enclosed in the physical barrier, some disassembly of the barrier may be required in some cases.

ohms, and (3) Section C.2.3 to verify that the voltage difference between any two exposed conductive parts of the electric chassis (including physical barriers) is less than or equal to 30 VAC or 60 VDC. The Alliance also specifies Section C.2.2 in SAE J1766 January 2014 for verifying that the resistance between a high voltage source and the electrical chassis [54] is greater than or equal to 0.05 ohms/VAC or 0.01 ohms/VDC. We note, however, that section C.2.2 does not provide a specific method of measurement and instead states, ''The measurement may be performed by any means that provides sufficient accuracy for the post-crash situation.''

These test procedures are further discussed in a later section analyzing the petitions for rulemaking to modify FMVSS No. 305.

VII. Overview of Proposed Rule

NHTSA is initiating rulemaking to consider adopting GTR No. 13 into FMVSS No. 305, as appropriate under the Vehicle Safety Act, and to address the issues raised by the Alliance and Toyota in their respective petitions. We request comment on the decisions put forth in this NPRM, including those regarding minor additional provisions that the agency is considering to address the concerns of the petitioners.

NHTSA believes that this NPRM would improve the level of safety afforded to the public. Adopting the provisions from GTR No. 13 that reduce the risk of harmful electric shock during normal vehicle operation would improve FMVSS No. 305 by expanding its performance requirements beyond post-crash conditions. The proposed requirements would provide post-crash compliance options for new power train configurations that ensure that those configurations provide a comparable level of post-crash safety compared to existing electric vehicles.

The proposed amendments are summarized as follows. In furtherance of implementing GTR No. 13 and in response to the petitions for rulemaking—

a. This NPRM proposes to add electrical safety requirements for vehicle performance during normal vehicle operations (as opposed to during and after a crash), to mitigate electric shock due to loss in electrical isolation and direct or indirect contact of high voltage sources. The electrical safety requirements during normal vehicle operations would include requirements for:

1. Direct Contact Protection From High Voltage Sources

i. IPXXD protection level for high voltage sources inside passenger and luggage compartments. IPXXB protection level for high voltage sources not in passenger and luggage compartments.

ii. IPXXB protection level for service disconnect that can be opened or removed without tools.

iii. Markings on barriers of high voltage sources that can be physically accessed, opened, or removed without the use of tools.

iv. Orange color outer covering for cables of high voltage sources that are located outside electrical protection barriers.

2. Indirect Contact Protection From High Voltage Sources

Exposed conductive parts of electrical protection barriers would have to be conductively connected to the chassis with a resistance less than 0.1 ohms, and the resistance between two simultaneously reachable exposed conductive parts of electrical protection barriers that are within 2.5 meters of each other would have to be less than 0.2 ohms.

3. Electrical Isolation of High Voltage Sources

i. 500 ohms/volt or higher electrical isolation for AC high voltage sources and 100 ohms/volt or higher for DC high voltage sources

ii. For conditions where AC and DC bus are connected, AC high voltage sources would be permitted to have electrical isolation of 100 ohms/volt or higher, provided they also have the direct and indirect contact protection described in 1 and 2, above.

iii. There would be an exclusion of 48 volt hybrid vehicles from electrical isolation requirements during normal vehicle operation.

4. Electrical Isolation Monitoring System for DC High Voltage Sources on Fuel Cell Vehicles

5. Electrical Safety During Charging Involving Connecting the Vehicle to an External Electric Power Supply

i. Minimum electrical isolation resistance of one million ohms of the coupling system for charging the electrical energy storage system; and

ii. Conductive connection of the electric chassis to earth ground before and during exterior voltage is applied.

6. Mitigating Driver Error by—

i. Requiring an indication to the driver when the vehicle is in active driving mode upon vehicle start up and when the driver is leaving the vehicle; and,

ii. Preventing vehicle movement by its own propulsion system when the vehicle charging system is connected to the external electric power supply.

b. This NPRM proposes to amend FMVSS No. 305's post-crash electrical safety requirements. The post-crash electrical safety requirements would include:

1. Adding an additional optional method of meeting post-crash electrical safety requirements through physical barrier protection from high voltage sources. The proposed specifications of this optional method of electric safety include requirements ensuring that:

i. High voltage sources would be enclosed in barriers that prevent direct human contact with high voltage sources (IPXXB protection level),

ii. Exposed conductive parts of electrical protection barriers would be conductively connected to the chassis with a resistance less than 0.1 ohms, and the resistance between two simultaneously reachable exposed conductive parts of electrical protection barriers that are less than 2.5 meters from each other would be less than 0.2 ohms, and

iii. Voltage between a barrier and other exposed conductive parts of the vehicle would be at a low voltage level that would not cause electric shock (less than 60 VDC or 30 VAC).

2. Permitting an AC high voltage source that is conductively connected to a DC high voltage source to meet lower minimum electrical isolation requirement of 100 ohms/volt provided the AC high voltage source also has physical barrier protection specified in 1, above.

VIII. Proposal Addressing Safety During Normal Vehicle Operations

We first discuss the proposed requirements for vehicle performance during normal vehicle operations, followed by those for performance post-crash.

a. Direct Contact Protection From High Voltage Sources

GTR No. 13 specifies safety measures to ensure that high voltage sources cannot be contacted. This safety measure is to enclose high voltage sources in physical barriers (electrical protection barriers) to prevent direct human contact. NHTSA is proposing to include in FMVSS No. 305 the direct contact protection requirements specified in GTR No. 13 for the passenger and luggage compartments and other areas.[55]

NHTSA is proposing to assess protection against direct contact with high voltage sources contained inside the passenger and luggage compartments using a 1.0 mm diameter and 100 mm long test wire probe (IPXXD). This test probe ensures that any gaps in the protective barriers are

[54] Since the resistance between a protective physical barrier and the electrical chassis is required to be less than or equal to 0.1 ohm (a very low value), the resistance between a high voltage source and the physical barrier would be the same as or only slightly lower than the resistance between the high voltage source and the electrical chassis.

[55] GTR No. 13 assesses the potential for direct contact with high voltage components using test probes specified in ISO 20653.

no larger than 1 mm and that any live components contained within are no closer to the gap than 100 mm. This ensures that body parts, miscellaneous tools or other slender conductive items typically present in a passenger or luggage compartment cannot penetrate any gaps/seams in the protective enclosures and contact high voltage components contained within.

For assessing protection against direct contact with high voltage sources in areas other than the passenger and luggage compartments under normal operating conditions, NHTSA is proposing to use the test probe IPXXB, representing a test finger. In areas other than the passenger and luggage compartments, the barrier would not likely contact tools and other slender conductive items. Therefore, protection using the test wire probe IPXXD would not be necessary and the test finger probe IPXXB would be appropriate to prevent inadvertent contact with high voltage components contained in the protective enclosures, by persons such as mechanics.

GTR No 13 also requires that a service disconnect that can be opened, disassembled, or removed without tools requires IPXXB protection when it is opened, disassembled, or removed. NHTSA is proposing to include this requirement into FMVSS No. 305, as well as a definition for a service disconnect.

NHTSA is proposing marking (yellow high voltage symbol) for enclosures and barriers of high voltage sources that can be physically accessed, opened, or removed without the use of tools, similar to GTR No. 13. As explained earlier in this preamble, we are not excluding some barriers as GTR No. 13 does.

NHTSA is proposing that cables for high voltage sources which are not located within electrical protection barriers to be identified by an orange color outer covering, similar to GTR No. 13. However, as explained earlier in this preamble, we are not excluding some connectors as GTR No. 13 does.

As noted earlier in this preamble, GTR No. 13 specifies direct contact protection requirements for high voltage connectors separately, and has exclusions with which we do not agree. Per GTR No. 13, connectors do not need to meet IPXXB protection if they are located underneath the vehicle floor and are provided with a locking mechanism, or require the use of tools to separate the connector, or the voltage reduces to below 30 VAC or 60 VDC within one second after the connector is separated. For the reasons given earlier, NHTSA does not believe that the exclusions are warranted and does not anticipate adopting them in a final rule.

b. Indirect Contact Protection From High Voltage Sources

Under GTR No. 13, exposed conductive parts (parts that can be contacted with the test probes, IPXXD or IPXXB, and become electrically energized under electrical isolation failure conditions) have to be protected against indirect contact during normal vehicle operation. GTR No. 13 requires electrical protection barriers or enclosures of high voltage sources to be conductively connected to the electrical chassis with resistance of no more than 0.1 ohms during normal vehicle operations. This requirement would provide protection from electric shock by shunting [56] any harmful electrical currents to the vehicle chassis should any electrically charged components lose isolation within the protective barrier.

For indirect contact protection, we propose to apply the same indirect contact protection requirements and test procedures as would apply under post-crash conditions (see discussion in next section, below). The proposed indirect contact protection requirements would be for exposed conductive parts of electrical protection barriers to be conductively connected to the chassis with a resistance less than 0.1 ohms and that the resistance between two simultaneously reachable exposed conductive parts of electrical protection barriers that are within 2.5 meters of each other be less than 0.2 ohms. These resistances would be measured by passing a current of at least 0.2 A between exposed conductive parts and the electrical chassis. For the reasons previously discussed, NHTSA is not including GTR No. 13's provision that permits visual inspection of welds as a method of assessing compliance of indirect contact protection.

c. Electrical Isolation of High Voltage Sources

This NPRM would require that under normal operating conditions, all high voltage sources of the power train and those connected to the power train have sufficient electrical isolation resistance measured against the electrical chassis to ensure that current flowing through a human body in contact with the vehicle is not dangerous.

For conditions where DC and AC high voltage sources are isolated from each other, DC high voltage sources would be required to have a minimum electrical isolation of 100 ohms/volt and AC high voltage sources would be required to have a minimum of 500 ohms/volt.

For conditions where DC and AC high voltage sources are connected, AC and DC high voltage sources would be permitted to have a minimum electrical isolation of 100 ohms/volt, provided the AC high voltage source has direct and indirect contact protection in a. and b. above.

We proposed to exclude 48 volt hybrid vehicles from these electrical isolation requirements during normal vehicle operation. Since electric components in 48 volt mild hybrid systems are conductively connected to the electric chassis, these systems would not be able to comply with electrical isolation requirements both during normal vehicle operations and after a crash. Therefore, we believe that the ''normal use'' requirements in GTR No. 13 need to be modified to permit the introduction of 48 volt mild hybrid systems.

The United Nations Economic Commission for Europe Regulation 100 (ECE R.100) [57] normal operation requirements were modified on June 10, 2014 to facilitate the development and sale of 48 volt mild hybrid systems. Under these changes, 48 volt mild hybrid systems that are conductively connected to the electrical chassis are exempt from the in-use electrical isolation requirements. However, electrical protection barriers are still required during normal vehicle operations for high voltage components of these 48 volt mild hybrid systems so as to provide direct and indirect contact protection. As discussed in a later section for post-crash electrical safety requirements, we believe that these 48 volt mild hybrid systems with electrical protection barriers for all high voltage components in the system would not pose concerns regarding electric shock. Therefore, NHTSA proposes to include a similar exclusion from in-use electrical isolation requirements for 48 volt mild hybrid systems that are conductively connected to the electrical chassis.

[56] Shunting is when a low-resistance connection between two points in an electric circuit forms an alternative path for a portion of the current. If a human body contacts an electrical protection barrier that is energized due to loss in electrical isolation of a high voltage source enclosed in the barrier, most of the current would flow through the chassis rather than through the human body because the current path through the chassis has significantly lower resistance (less than 0.1 ohm) than the resistance of the human body (greater or equal to 500 ohm).

[57] Uniform Provisions Concerning the Approval of Vehicles with Regard to Specific Requirements for the Electric Power Train, ECE R.100–02, June 24, 2014.

d. Electrical Isolation Monitoring System for DC High Voltage Sources on Fuel Cell Vehicles

GTR No. 13 requires that DC high voltage sources (other than the coupling system for charging) in HFCVs have an on-board electrical isolation monitoring system, together with a warning to the driver if the isolation resistance drops below the minimum required value of 100 ohms/volt. Similarly, FMVSS No. 305 currently specifies that DC high voltage sources that comply with electrical safety requirements by the electrical isolation of 100 ohms/volt must have an electrical isolation monitoring system to warn the driver. SiCnce most HFCVs would comply with the electrical isolation requirements in FMVSS No. 305 using the 100 ohms/volt option,[58] these HFCVs, which must have an electrical isolation monitoring system under GTR No. 13, would also be required by FMVSS No. 305 to have the monitoring system.

Nonetheless, to ensure that the intent of GTR No. 13 and FMVSS No. 305 are met, the agency is proposing to amend FMVSS No. 305 to indicate expressly that each DC high voltage source in fuel cell vehicles would need to be equipped with an electrical isolation monitoring system.

e. Protection From Electric Shock During Charging

GTR No. 13 requires electric vehicles whose rechargeable energy storage system are charged by conductively connecting to an external power supply to have a device to enable conductive connection of the electrical chassis to the earth ground during charging. Additionally, GTR No. 13 requires the isolation resistance between the high voltage source and the electrical chassis to be at least 1 million ohms when the charge coupler is disconnected. The first requirement ensures that in the event of electrical isolation loss during charging, a person contacting the vehicle does not form a ground loop with the chassis and sustain significant electric shock. The second requirement ensures that the magnitude of current through a human body when a person contacts a vehicle undergoing charging is low and in the safe zone. NHTSA believes these two normal use charging safety requirements are warranted and proposes to include them in FMVSS No. 305.

f. Mitigating Driver Error

Consistent with GTR No. 13, we propose amending FMVSS No. 305 to add requirements that mitigate the likelihood of driver error in operating electric vehicles. First, we propose requiring vehicles to provide an indication to the driver when the vehicle is in an active driving mode upon vehicle start up and when the driver is leaving the vehicle.[59] Second, we propose requiring vehicles to prevent vehicle movement by its own propulsion system when the vehicle charging system is connected to the external electric power supply.

IX. Proposal Addressing Safety Post-Crash

FMVSS No. 305 requires that after a crash, each high voltage source in the vehicle are either electrically isolated from the vehicle's chassis, or their voltage is reduced to levels considered safe from electric shock hazards (*i.e.,* less than 30 VAC or less than 60 VDC).

As noted in earlier sections, GTR No. 13 specifies that vehicles may meet regulatory requirements by having no high voltage levels (see (a) below), meet physical barrier protection requirements (see (b)) below, or meet electrical isolation requirements (see (c) below):

a. Voltage levels: The voltages of the high voltage source must be less than or equal to 30 VAC or 60 VDC within 60 seconds after the impact. (This option for electrical safety is currently in FMVSS No. 305.)

b. Electrical protection barrier: The physical protection requirement is an option each contracting party of the 1998 agreement may elect to adopt. The provision is similar to the electrical safety requirements during normal operations except that the protection degree IPXXB applies rather than IPXXD. (The provision for electrical protection through physical barriers is currently not in FMVSS No. 305.)

i. Protection from direct contact: Protection from direct contact of high voltage sources with protection degree IPXXB required.

ii. Protection from indirect contact: The resistance between all exposed conductive parts and electrical chassis is required to be less than 0.1 ohms when there is a current flow of at least 0.2 A.[60]

c. Electrical isolation:

i. If the AC and DC high voltage sources are conductively isolated from each other, then the minimum electrical isolation of a high voltage source to the chassis is 500 ohms/volt for AC components and 100 ohms/volt for DC components of the working voltage.

ii. If AC and DC high voltage sources are conductively connected, the minimum electrical isolation of AC and DC high voltage sources must be—

- 500 ohms/volt of the working voltage, or
- 100 ohms/volt of the working voltage

with the AC high voltage sources meeting the physical protection requirements in (b) or have no high voltage as specified in (a).

(FMVSS No. 305 does not distinguish AC and DC high voltage sources that are conductively connected from those that are isolated. Thus, the method above for complying with electrical isolation requirements when AC and DC high voltage sources are connected post-crash (see c. ii. above) is not now available in FMVSS No. 305.)

Proposal

This NPRM proposes to amend the isolation resistance compliance option in FMVSS No. 305 to harmonize with GTR No. 13. We are proposing to add an optional method of meeting post-crash electrical isolation requirements for an AC high voltage source that is connected to a DC high voltage source. In such condition, the required minimum electrical isolation for the AC high voltage source is 100 ohms/volt provided the AC high voltage source meets the post-crash physical barrier protection requirements.

We are also proposing to add a physical barrier protection option for post-crash electrical safety that includes requirements specifying that:

i. High voltage sources must be enclosed in barriers that prevent direct human contact with high voltage sources (IPXXB protection level),

ii. Electrical protection barriers must be conductively connected to the chassis with a resistance less than 0.1 ohms, and the resistance between two simultaneously reachable exposed conductive parts of electrical protection barriers that are less than 2.5 meters of each other must be less than 0.2 ohms, and

iii. Voltage between a barrier and other exposed conductive parts of the vehicle must be at a low voltage level that would not cause electric shock (less than 60 VDC or 30 VAC).

Electrical Isolation Resistance Option

Currently, FMVSS No. 305's electrical isolation option requires that vehicles with high voltage sources meet different isolation requirements based on whether the vehicle is an AC or a DC high voltage source. Electric powered vehicles are required to electrically isolate AC and DC high voltage sources from the chassis with electrical isolation no less than 500 ohms/volt, but the DC high voltage source can have electrical isolation no less than 100 ohms/volt if

[58] In fuel cell vehicles, the presence of fuel cell coolant may not permit electrical isolation levels of 500 ohms/volt of the DC source.

[59] We note that an NPRM issued on FMVSS No. 114, ''Theft protection and rollaway prevention'' (76 FR 77183) proposes to require vehicles with keyless ignition controls to provide an audible warning to the driver exiting the vehicle while the propulsion system is operating. We request comment on whether the FMVSS No. 114 requirement, if adopted, would satisfy this provision in the GTR.

[60] GTR No. 13 considers this requirement to be met if visual inspection indicates that conductive connection has been established by welding. The minimum resistance requirement is only evaluated in case of doubt.

the DC high voltage source has an electrical isolation monitoring system.

GTR No. 13 differs from FMVSS No. 305 by distinguishing between situations where AC and DC high voltage are conductively isolated from each other or are conductively connected. GTR No. 13 states that when AC and DC high voltage sources are isolated from each other, the AC high voltage sources need to maintain electrical isolation no less than 500 ohms/volt and DC sources need to maintain electrical isolation no less than 100 ohms/volt. This is similar to FMVSS No. 305.[61]

When the AC and DC sources are conductively connected, GTR No. 13 affords three different methods for these high voltage sources to achieve compliance:

(1) All AC and DC sources maintain minimum electrical isolation of 500 ohms/volt (this is basically the approach of FMVSS No. 305);

(2) AC high voltage sources that are linked to a DC high voltage source may have a minimum of 100 ohms/volt instead of 500 ohms/volt if the AC high voltage source also has physical barrier protection from direct and indirect contact of high voltage sources;[62] or

(3) all AC and DC sources maintain a minimum isolation resistance of 100 ohms/volt *and* all AC sources meet low-voltage requirements in GTR No. 13.

Need for Amendment

After reviewing the Toyota petition and other information, NHTSA understands petitioners' concern about FMVSS No. 305's electrical isolation requirements for AC high voltage sources under the conditions when the AC and DC bus are conductively connected. We tentatively believe that an amendment is warranted to facilitate the manufacture of fuel cell and other vehicles.

If FMVSS No. 305 were not amended, the electrical isolation for fuel cell stacks would need to be 500 ohms/volt or greater to comply with FMVSS No. 305, which may not be technically feasible.

Proposal for Electrical Isolation Option

In consideration of the above, NHTSA is proposing to add an option that would permit an AC high voltage source that is connected to a DC high voltage source post-crash to have electrical isolation no less than 100 ohms/volt provided the high voltage source also meets physical barrier protection requirements. Specifically, the electrical isolation option for electrical safety in the proposal requires that the electrical isolation of a high voltage source be greater than or equal to one of the following:

(1) 500 ohms/volt for an AC high voltage source; or

(2) 100 ohms/volt for an AC high voltage source if it is conductively connected to a DC high voltage source, but only if the AC high voltage source meets the physical barrier protection requirements; or

(3) 100 ohms/volt for a DC high voltage source.

NHTSA tentatively believes that adding this option into the existing FMVSS No. 305 requirements essentially harmonizes with the electrical isolation option in GTR No. 13. When an AC and DC high voltage source are conductively connected, the electrical isolation measured will be the same for both high voltage sources and approximately equal to the lower electrical isolation measurement of the two. Accordingly, the combined electrical isolation of conductively connected AC and DC high voltage sources can be greater than or equal to 500 ohm/volt only if the electrical isolation of each AC and DC high voltage sources are greater than or equal to 500 ohms/volt. Therefore the first option for electrical isolation in GTR No. 13 when an AC and DC high voltage source are conductively connected is redundant to what is already in FMVSS No. 305 since it is equivalent to the electrical isolation requirement when the AC and DC high voltage sources are conductively isolated from each other. The third option for electrical isolation in GTR No. 13 is unnecessary because if an AC high voltage source meets low voltage requirements, there is no need to meet the electrical isolation requirements.

We note, however, that the physical barrier protection requirement in the proposed regulatory language to accommodate a lower electrical isolation level for a AC high voltage source that is conductively connected to a DC high voltage source is not the same as that specified in GTR No. 13. The physical barrier protection requirement is an option each contracting party of the 1998 agreement may elect to adopt. As explained in the following section, although our proposal in this document chooses not to adopt the physical barrier option in GTR No. 13 per se, we are proposing to adopt a modified physical barrier option. Based on the information from the Battelle research, the Alliance petition, the Toyota petition and other sources, we tentatively believe that our proposed physical barrier option will afford the compliance flexibility that the manufacturers desire while providing a level of safety that is more comparable to the other post-crash electric shock compliance options.

Physical Barrier Protection

Need for Amendment

The Alliance petition for rulemaking requested updates to FMVSS No. 305 for facilitating the development and sale of not only HFCVs but also 48 volt mild hybrid vehicles. Because 48 volt batteries are considered low voltage, the 48 volt mild hybrid systems are designed with conductive connection to the electric chassis and so are unable to provide electrical isolation. While most parts of the 48 volt mild hybrid system would be considered low voltage per the measurement to the chassis, the voltage between different phases of the 3-phase AC motor can be slightly greater than 30 VAC and so would be considered a high voltage source.

The Alliance Petition

The agency has considered the information provided by the Alliance and by Mercedes-Benz[63] and tentatively concludes that without an electrical protection barrier option, 48 volt mild hybrids will not be a practical consideration for improving fuel economy. In the absence of such an option, these systems will need to be electrically isolated from the chassis and thereby result in higher mass, reduced fuel economy, increased emissions, and higher consumer costs.

Regarding the Battelle study, we first begin by noting that we agree with the Alliance's analysis that for electric

[61] We note that GTR No. 13 permits DC high voltage sources to have 100 ohms/volt minimum electrical isolation without specifying that the DC high voltage sources must be equipped with an electrical isolation monitoring system. While this appears to differ from FMVSS No. 305, we do not believe there is a practical difference. The only vehicles needing to use FMVSS No. 305's 100 ohms/volt electrical isolation compliance option for DC high voltage sources are fuel cell vehicles. In this NPRM, the agency is proposing to require all DC high voltage sources of fuel cell vehicles to be equipped with an electrical isolation monitoring system. Therefore, while we propose to adopt the post-crash electrical isolation requirements for DC high voltage sources in GTR No. 13 into FMVSS No. 305 to further harmonization efforts, we do not believe there would be an effect on vehicle design or safety.

[62] FMVSS No. 305 does not distinguish when the AC and DC sources are connected from when AC and DC sources are separated. The standard specifies that all AC high voltage sources must have a minimum electrical isolation of 500 ohms/volt. The condition involving connected AC and DC high voltage sources is germane to the Toyota petition.

[63] We discussed the Mercedes-Benz information earlier in this preamble, in the section describing the Alliance's petition for rulemaking, *supra*. 48 V Systems—Powerful Innovative Technologies for 2020 FC Targets, Mercedes-Benz, Daimler AG, June 2, 2015. Available in the docket for this NPRM.

powered vehicles that meet the electrical isolation and physical barrier protection requirement in GTR No. 13 during normal vehicle operation, there is a very low likelihood that the various safety critical scenarios identified in the Battelle report with electric shock potential would occur. The scenarios would only be possible if multiple failures of safety systems occurred, along with human contact to very specific locations. Be that as it may, the Alliance petition also suggested modifications to the electrical protection barrier provisions in GTR No. 13, which it states provide the same level of protection as the electrical isolation option for electrical safety in FMVSS No. 305 along with protection from the safety critical scenarios identified in the Battelle report.

The physical barrier protection option in the Alliance petition specifies two optional methods of providing physical barrier protection from direct and indirect contact of high voltage sources. The first method (Option 1) requires an AC or DC high voltage source to have:

1. Direct contact protection degree IPXXB,

2. All exposed conductive parts of electrical protection barriers are conductively connected to electrical chassis with resistance less than 0.1 ohms, and

3. The electrical isolation between the high voltage source and the electrical protection barrier enclosing it is greater than or equal to 0.05 ohms/VAC or 0.01 ohms/VDC.

The second method (Option 2) requires an AC or DC high voltage source to have:

1. Direct contact protection degree IPXXB.

2. The voltage between the electrical protection barrier and other exposed conductive parts is low voltage (30 VAC or 60 VDC).

Technical Analysis

The physical barrier protection provides electrical safety via electrical protection barriers that are placed around high voltage components to insure that there is no direct or indirect human contact with live high voltage sources during normal vehicle operation or after a vehicle crash. For protection against contact with live parts in post-crash conditions, a test probe designed to simulate a small human finger (12 mm) conforming to ISO 20653 ''Road vehicles—Degrees of protection (IP-Code)—Protection of electrical equipment against foreign objects, water, and access (IPXXB)'' is specified in GTR No. 13.[64] The agency notes that protection against direct contact of high voltage sources is currently not specified in FMVSS No. 305 and so adding such a provision into FMVSS No. 305 would further enhance protection from electric shock. The IPXXB finger probe is utilized in other standards[65] for protecting electrical maintenance personnel from inadvertently contacting high voltage during servicing of electrical equipment. Therefore, NHTSA tentatively believes protection level using the simulated human finger probe (IPXXB) to prohibit inadvertent contact by passengers and first responders with high voltage components contained within protective enclosures is appropriate.[66]

NHTSA reviewed[67] the Alliance's proposal for a post-crash electrical protection barrier option for FMVSS No. 305 and confirmed that the electric current Ib through the body (with minimum resistance of 500 ohms) in Figure 9, *supra,* is less than or equal to 10 mA DC or less than or equal to 2 mA AC under various scenarios, as long as the three requirements for the Alliance-suggested Option 1 for post-crash physical barrier protection are met. These are: 1. Direct contact protection degree IPXXB, 2. all exposed conductive parts are conductively connected to electrical chassis with resistance less than 0.1 ohms, and 3. the combined resistance of R_1 and R_2 and the resistance of the conductive connection of the electrical protection barrier to the chassis is greater than or equal to 0.05 ohms/VAC or 0.01 ohms/VDC. When all three conditions in the Option 1 physical barrier protection suggested by Alliance are met, the agency's analysis showed that in the event of loss in electrical isolation, the body current is limited to safe levels under the various safety critical scenarios identified in the Battelle study. The agency's analysis also confirmed that when the above conditions are met, the voltage between barrier #1 and barrier #2 in Figure 9 is less than or equal to 30 VAC or 60 VDC, as the Alliance noted.[68]

The specification that the conductive connection between a protection barrier and the chassis be less than 0.1 ohm provides protection from electric shock by shunting any harmful electrical currents through the vehicle chassis (rather than through a human contacting the protection barrier) should any electrically charged components lose isolation within the protective barrier. The 0.1 ohms resistance level for electrical bonding (or conductive connection) is well established in international standards both in and out of the automotive industry (*e.g.* MIL_B_5087, NASA Technical Standard NSA–STD–P023 ''Electrical Bonding for NASA Launch Vehicles, Payloads, and Flight Equipment,'' ISO6469, ECE–R100, and IEC 60335–1 ''Household and Similar Electrical Appliances'' Part 1: General Requirements). For these reasons, NHTSA accepts that the resistance of the conductive connection between the protective barrier and the electrical chassis be less than 0.1 ohms.

However, the agency sought clarification on the indirect contact protection requirement of Option 1 suggested by the Alliance, which states that, ''The resistance between exposed conductive parts of the electrical protection barrier(s) and the electrically conductive chassis is less than 0.1 ohms where there is a current flow of at least 0.2 A.'' NHTSA noted that the maximum allowable resistance for the electrical chassis was not specified and asked the Alliance how its suggested Option 1 would afford adequate indirect contact protection when exposed conductive parts of two electrical protection barriers were contacted simultaneously instead of simultaneous contact of an electrical protection barrier and the chassis.

[64] IEC60529 Second edition 1989–11 + Am. 1 1999–11, EN60529, ''Degrees of protection provided by enclosures.''

[65] For example, IEC 60479, ''Low voltage switchgear and control gear assemblies,'' uses IPXXB level protection for preventing contact with high voltage sources by maintenance personnel. The voltage levels considered in IEC 60479 are similar to those in automotive application.

[66] The use of the IPXXB finger probe as opposed to the IPXXD wire probe for evaluating direct contact protection after a crash test is appropriate. The IPXXD is intended to evaluate contact with high voltage sources inside the passenger or luggage compartment during normal vehicle operation to ensure that body parts, miscellaneous tools or other slender conductive items typically encountered in a passenger or luggage compartment cannot penetrate any gaps/seams in the protective enclosures and contact high voltage components contained within.

[67] Supporting technical document in the docket of this NPRM.

[68] For example, an analysis of the circuit in Figure 9 was conducted using the following values for the components in the circuit: Vb = 1000 VDC, bonding resistance bond #1 and bond #2 equal to 0.1 ohm, R1 and R2 resistances equal to 20 ohms, and body resistance equal to 500 ohms. This resulted in a combined resistance of R_1 and R_2 and bonding resistance to chassis of 10.05 ohms (or 0.01005 ohms/volt electrical isolation from the chassis) and current through the body of 9.95 mA (<10 mA considered as safe level of current). The analysis also showed that in this example, the voltage between barrier #1 and barrier #2 is equal to 4.97 volt (<60 volt is considered to be low voltage). This is further explained in the supporting technical document in the docket of this NPRM.

In response,[69] the Alliance acknowledged that the effective resistance between two exposed conductive parts of the electrical protection barriers was not well defined in its proposal. The petitioner stated that in order to address the fact that there are no resistance specifications for the electrically conductive chassis, it recommends the addition of a performance requirement that limits the maximum resistance between any two exposed conductive parts of the electrical protection barriers to less than 0.2 ohms (which corresponds to the requirement that maximum resistance between the protective physical barrier and the electrical chassis is less than 0.1 ohms). The Alliance also stated that the resistance measurements between any two exposed conductive parts of the electrical protection barriers should be limited to those that can be simultaneously contacted by a human. The petitioner stated its belief that limiting the resistance measurement to a distance of 2.5 meter[70] would ensure that any surfaces that can be simultaneously contacted by a human be subjected to the proposed performance requirements. The petitioner noted that such a distance limitation would significantly reduce the test burden (number of test points) while maintaining the same level of safety. Accordingly, the Alliance offered the following modification to the text in SAE J1766 regarding indirect contact protection requirements and requested that NHTSA seek comment on it in an NPRM.

[Petitioner's suggested requirement] S5.3.4(2)—The bonding resistance between any exposed conductive parts of the electrical protection barriers and the vehicle's electrical chassis shall not exceed 0.1 ohms. This requirement is deemed satisfied if the galvanic connection has been made by welding and the weld is intact after each of the specified crash tests. In addition, the bonding resistance between any two simultaneously reachable exposed conductive parts of the electrical protection barriers in a distance of 2.5 meters shall not exceed 0.2 ohms. See C.2.1 for the applicable test procedure.

The agency tentatively concludes that this modification responds to NHTSA's concern about the lack of resistance specification for the electrical chassis and the lack of low resistance specification between two electrical protection barriers that can be contacted simultaneously.[71] However, we note that the requirement in the suggested S5.3.4(2) above is for the resistance to be less than or equal to 0.1 ohms and 0.2 ohms, while SAE J1766 January 2014 and GTR No. 13 specify that the resistance be less than 0.1 ohms. For purposes of harmonization with GTR No. 13, the agency proposes to use ''less than 0.1 ohms'' and ''less than 0.2 ohms.''

The proposed modification suggested by the Alliance also states, ''This requirement is deemed satisfied if the galvanic connection has been made by welding and the weld is intact after each of the specified crash tests.'' We believe that such a method of assessing compliance of indirect contact protection by visually inspecting the welding lacks objectivity that is needed for FMVSS. Therefore, NHTSA proposes not including this method for evaluating compliance. Instead, the agency proposes to include the test procedure in GTR No. 13 and SAE J1766 January 2014 that determines the resistance between an electrical protection barrier and the chassis and between two electrical protection barriers by passing through a current of at least 0.2 A. NHTSA seeks comment on its proposal not to include assessing compliance of a conductive connection by means of visual inspection.

The agency's review had also indicated that the Alliance's proposed Option 2 for physical barrier protection (direct contact protection degree IPXXB and the voltage between barrier #1 and barrier #2 is less than or equal to 30 VAC or 60 VDC) does not guarantee that the current through the body is less than 10 mA DC and 2 mA AC for all scenarios.[72] NHTSA requested that the Alliance provide clarification on this matter. The Alliance responded[73] that FMVSS No. 305 already recognizes these low voltage thresholds, both with respect to the applicability of the standard and with respect to the electrical safety provisions of the standard. The Alliance also noted that GTR No. 13 and numerous other government regulations and industry standards recognize these low voltage threshold levels for automotive applications.[74] The Alliance observed that for voltage below or equal to 30 VAC and 60 VDC, the potential body current is below the let-go limit[75] and below the limit for electric shock with non-reversible harm. The Alliance stated that it is for these reasons that voltage levels below 30 VAC and 60 VDC are designated worldwide as low voltage without safety concern.[76]

NHTSA tentatively agrees with the clarification provided by the Alliance that voltage levels at or lower than 30 VAC and 60 VDC are already specified as low voltage in FMVSS No. 305 and at these voltage levels, the potential body current is below the limit for electric shock. Currently, the European Union, Japan, and Korea, permit compliance for electrical safety using the electrical protection barrier option in GTR No. 13 and NHTSA is not aware of any incidence of electrical shock during normal operation and after a crash.

The Alliance suggested adopting Option 2 for physical barrier protection rather than Option 1 because it is difficult to measure electrical isolation between the high voltage source and exposed conductive parts of its electrical protection barrier, which is needed to assess compliance with Option 1.[77] Additionally, the agency's analysis confirms that of the Alliance's, that if the three conditions of Option 1 are met, the two conditions of Option 2 would also be met and in the event of loss of electrical isolation, the current through a body contacting electrical protection barriers is within safe levels

[69] Alliance's response to NHTSA's questions is in the docket of this NPRM.

[70] This distance specification was obtained from IEC 60364–4–41. ''Low-voltage electrical installations—Part 4–4—Protection against electric shock.'': Annex B (Obstacles and Placing out of Reach), and ISO6469–3,:2011, ''Electrically propelled road vehicles—Safety specifications—Part 3: Protection of persons against electric shock.''

[71] NHTSA's analysis using 0.2 ohm resistance (instead of 0.1 ohm) between two protective barriers along with IPXXB protection and isolation between high voltage source and the protective barrier of 0.01 ohm/VDC or 0.05 ohm/VAC results in safe current levels through the body (10 mA DC or 2 mA AC). See details of NHTSA's analysis in the supporting technical document in the docket of this NPRM.

[72] For example, an analysis of the circuit in Figure 9 was conducted using the following values for the components in the circuit: Vb = 1000 VDC, bonding resistance bond #1 and bond #2 equal to 0.1 ohm, R1 and R2 resistances equal to 1.6 ohms, and body resistance equal to 500 ohms. This resulted in a combined resistance of R_1 and R_2 and bonding resistance to chassis of 0.85 ohms (or 0.00085 ohms/volt electrical isolation from chassis) and current through the body of 117 mA (>10 mA is considered an unsafe level of current). The analysis also showed that in this example, the voltage between barrier #1 and barrier #2 is equal to 58.52 volt (<60 volt is considered to be low voltage). This is further explained in the supporting technical document in the docket of this NPRM.

[73] Alliance's response to NHTSA's questions is in the docket of this NPRM.

[74] Electrical safety requirements in Europe, Japan, and Korea and SAE J1766 recognize voltage levels less than or equal to 30 VAC or 60 VDC as low voltage.

[75] Maximum value of touch current at which a person holding electrodes can let go of the electrodes.

[76] The Alliance also noted its belief that the indirect contact scenarios identified in the Battelle study are extremely rare and that in setting appropriate safety measures, the probability of faults, probability of contact with live parts, and the ratio of touch voltage and fault voltage needs to be considered.

[77] The Alliance did not specify a test procedure to determine electrical isolation between the high voltage source and its electrical protection barrier.

(same level of safety as that afforded by post-crash electrical isolation requirements).

NHTSA's Proposal for Physical Barrier Protection

In consideration of the above technical analysis, the agency is proposing to combine Alliance's suggested Option 1 and Option 2 requirements for electrical protection barriers. Specifically, the agency proposes the following requirements for an electrical protection barrier of a high voltage source:

(1) Direct contact protection degree IPXXB,

(2) indirect contact protection (electrical protection barriers are conductively connected to the chassis with resistance less than 0.1 ohms and resistance between two electrical protection barriers that are accessible within 2.5 meters is less than 0.2 ohms), and

(3) low voltage of 30 VAC or 60VDC between the electrical protection barrier and other exposed conductive parts.

The first two conditions are specified in GTR No. 13 and (1) and (3) together is the same as Option 2 suggested by the Alliance. We concur that there is merit to the third condition since FMVSS No. 305 already recognizes voltages less than or equal to 30 VAC and 60 VDC as low voltage. Our technical analysis confirms that the proposed post-crash physical barrier protection option (with the first two requirements in GTR No. 13 and an additional third requirement that electrical protection barriers be low voltage) affords the same level of safety as the post-crash electrical isolation option currently in FMVSS No. 305.

NHTSA seeks comment on the proposed inclusion of the physical barrier protection option into FMVSS No. 305. NHTSA also seeks comment on its proposed physical barrier protection requirements which combine the requirements in GTR No. 13 and Option 2 in the Alliance petition. The agency also seeks comment on the proposed test procedures for assessing physical barrier protection.

Toyota's Request for Amending Post-Crash Test Procedure

In its December 23, 2013 petition for rulemaking, Toyota requests that NHTSA amend S6.4 of FMVSS No. 305, which requires a vehicle to satisfy all of the post-crash performance requirements ''after being rotated on its longitudinal axis to each successive increment of 90 degrees. . . .'' Toyota recommends that the tests to evaluate electrical isolation and physical barrier protection requirements be performed after the vehicle is rotated a full 360 degrees. Toyota states that the vehicle conditions related to these requirements do not change at various increments of a rollover, and it would be increasingly dangerous for laboratory personnel to conduct the specified tests with the vehicle at other 90 degree increments.

NHTSA has evaluated Toyota's request and is denying it. NHTSA does not agree with Toyota's assessment that the vehicle conditions related to electrical safety requirements do not change at various increments of rollover. Post-crash direct contact protection is assessed by first opening, disassembling, or removing electrical protection barriers, solid insulator, and connectors without the use of tools, and then the IPXXB probe is used to determine if high voltage sources can be contacted. This evaluation may yield different results for the different attitudes of the vehicle. For example, high voltage sources may be more accessible when the vehicle is rotated 90 degrees than when upright. NHTSA is not aware of unreasonably dangerous conditions to laboratory personnel in conducting the specified tests with the vehicle at 90 degree increments. Toyota did not provide any supporting data to substantiate its case. NHTSA seeks comment on this issue.

X. Rulemaking Analyses and Notices

Executive Order 12866 and DOT Regulatory Policies and Procedures

This rulemaking document was not reviewed by the Office of Management and Budget under E.O. 12866. It is not considered to be significant under E.O. 12866 or the Department's Regulatory Policies and Procedures. The amendments proposed by this NPRM would have no significant effect on the national economy, as the requirements are already in voluntary industry standards and international standards that current electric powered vehicles presently meet.

This NPRM proposes to update FMVSS No. 305 to incorporate the electrical safety requirements in GTR No. 13. This proposal also responds to petitions for rulemaking from Toyota and the Alliance to facilitate the introduction of fuel cell vehicles and 48 volt mild hybrid technologies into the vehicle fleet. The proposal adds electrical safety requirements in GTR No. 13 that involves electrical isolation and direct and indirect contact protection of high voltage sources to prevent electric shock during normal operation of electric powered vehicles. Today's proposal also provides an additional optional method of meeting post-crash electrical safety requirements in FMVSS No. 305 that involves physical barriers of high voltage sources to prevent electric shock due to direct and indirect contact with live parts. Since there is widespread conformance with the requirements that would apply to existing vehicles, we anticipate no costs or benefits associated with this rulemaking.

Regulatory Flexibility Act

NHTSA has considered the effects of this NPRM under the Regulatory Flexibility Act (5 U.S.C. 601 *et seq.,* as amended by the Small Business Regulatory Enforcement Fairness Act (SBREFA) of 1996). I certify that this NPRM would not have a significant economic impact on a substantial number of small entities. Any small manufacturers that might be affected by this NPRM are already subject to the requirements of FMVSS No. 305. Further, the agency believes the testing associated with the requirements added by this NPRM are not substantial and to some extent are already being voluntarily borne by the manufacturers pursuant to SAE J1766. Therefore, there will be only a minor economic impact.

National Environmental Policy Act

NHTSA has analyzed this rulemaking action for the purposes of the National Environmental Policy Act. The agency has determined that implementation of this action will not have any significant impact on the quality of the human environment.

Executive Order 13132 (Federalism)

NHTSA has examined today's NPRM pursuant to Executive Order 13132 (64 FR 43255; Aug. 10, 1999) and concluded that no additional consultation with States, local governments, or their representatives is mandated beyond the rulemaking process. The agency has concluded that the proposal does not have sufficient federalism implications to warrant consultation with State and local officials or the preparation of a federalism summary impact statement. The proposal does not have ''substantial direct effects on the States, on the relationship between the national government and the States, or on the distribution of power and responsibilities among the various levels of government.''

NHTSA rules can have preemptive effect in two ways. First, the National Traffic and Motor Vehicle Safety Act contains an express preemption provision:

When a motor vehicle safety standard is in effect under this chapter, a State or a political subdivision of a State may

prescribe or continue in effect a standard applicable to the same aspect of performance of a motor vehicle or motor vehicle equipment only if the standard is identical to the standard prescribed under this chapter. 49 U.S.C. 30103(b)(1).

It is this statutory command that preempts any non-identical State legislative and administrative law [78] addressing the same aspect of performance, not today's rulemaking, so consultation would be inappropriate.

Second, the Supreme Court has recognized the possibility, in some instances, of implied preemption of State requirements imposed on motor vehicle manufacturers, including sanctions imposed by State tort law. That possibility is dependent upon there being an actual conflict between a FMVSS and the State requirement. If and when such a conflict exists, the Supremacy Clause of the Constitution makes the State requirements unenforceable. See *Geier* v. *American Honda Motor Co.,* 529 U.S. 861 (2000), finding implied preemption of state tort law on the basis of a conflict discerned by the court,[79] not on the basis of an intent to preempt asserted by the agency itself.

NHTSA has considered the nature (*e.g.,* the language and structure of the regulatory text) and objectives of today's NPRM and does not discern any existing State requirements that conflict with the rule or the potential for any future State requirements that might conflict with it. Without any conflict, there could not be any implied preemption of state law, including state tort law.

Executive Order 12988 (Civil Justice Reform)

With respect to the review of the promulgation of a new regulation, section 3(b) of Executive Order 12988, ''Civil Justice Reform'' (61 FR 4729; Feb. 7, 1996), requires that Executive agencies make every reasonable effort to ensure that the regulation: (1) Clearly specifies the preemptive effect; (2) clearly specifies the effect on existing Federal law or regulation; (3) provides a clear legal standard for affected conduct, while promoting simplification and burden reduction; (4) clearly specifies the retroactive effect, if any; (5) specifies whether administrative proceedings are to be required before parties file suit in court; (6) adequately defines key terms; and (7) addresses other important issues affecting clarity and general draftsmanship under any guidelines issued by the Attorney General. This document is consistent with that requirement.

Pursuant to this Order, NHTSA notes as follows. The issue of preemption is discussed above. NHTSA notes further that there is no requirement that individuals submit a petition for reconsideration or pursue other administrative proceedings before they may file suit in court.

Privacy Act

Please note that anyone is able to search the electronic form of all comments received into any of our dockets by the name of the individual submitting the comment (or signing the comment, if submitted on behalf of an association, business, labor union, etc.). You may review DOT's complete Privacy Act Statement in the **Federal Register** published on April 11, 2000 (65 FR 19477–78), or online at *http://www.dot.gov/privacy.html.*

Paperwork Reduction Act

Under the Paperwork Reduction Act of 1995 (PRA), a person is not required to respond to a collection of information by a Federal agency unless the collection displays a valid OMB control number. There are no information collection requirements associated with this NPRM.

National Technology Transfer and Advancement Act

Section 12(d) of the National Technology Transfer and Advancement Act of 1995 (NTTAA), Public Law 104–113, as amended by Public Law 107–107 (15 U.S.C. 272), directs the agency to evaluate and use voluntary consensus standards in its regulatory activities unless doing so would be inconsistent with applicable law or is otherwise impractical. Voluntary consensus standards are technical standards (*e.g.,* materials specifications, test methods, sampling procedures, and business practices) that are developed or adopted by voluntary consensus standards bodies, such as the Society of Automotive Engineers (SAE). The NTTAA directs us to provide Congress (through OMB) with explanations when the agency decides not to use available and applicable voluntary consensus standards. The NTTAA does not apply to symbols.

FMVSS No. 305 has historically drawn largely from SAE J1766, and does so again for this current rulemaking, which proposes revisions to FMVSS No. 305 to facilitate the development of fuel cell and 48 volt mild hybrid technologies. It is based on GTR No. 13 and the latest version of SAE J1766 January 2014.

Unfunded Mandates Reform Act

Section 202 of the Unfunded Mandates Reform Act of 1995 (UMRA), Public Law 104–4, requires Federal agencies to prepare a written assessment of the costs, benefits, and other effects of proposed or final rules that include a Federal mandate likely to result in the expenditure by State, local, or tribal governments, in the aggregate, or by the private sector, of more than $100 million annually (adjusted for inflation with base year of 1995). Adjusting this amount by the implicit gross domestic product price deflator for the year 2013 results in $142 million (106.733/75.324 = 1.42). This NPRM would not result in a cost of $142 million or more to either State, local, or tribal governments, in the aggregate, or the private sector. Thus, this NPRM is not subject to the requirements of sections 202 of the UMRA.

Executive Order 13609 (Promoting Regulatory Cooperation)

The policy statement in section 1 of Executive Order 13609 provides, in part: The regulatory approaches taken by foreign governments may differ from those taken by U.S. regulatory agencies to address similar issues. In some cases, the differences between the regulatory approaches of U.S. agencies and those of their foreign counterparts might not be necessary and might impair the ability of American businesses to export and compete internationally. In meeting shared challenges involving health, safety, labor, security, environmental, and other issues, international regulatory cooperation can identify approaches that are at least as protective as those that are or would be adopted in the absence of such cooperation. International regulatory cooperation can also reduce, eliminate, or prevent unnecessary differences in regulatory requirements.

The agency participated in the development of GTR No. 13 to harmonize the standards of fuel cell vehicles. As a signatory member, NHTSA is proposing to incorporate electrical safety requirements and options specified in GTR No. 13 into FMVSS No. 305.

Regulation Identifier Number

The Department of Transportation assigns a regulation identifier number (RIN) to each regulatory action listed in the Unified Agenda of Federal

[78] The issue of potential preemption of state tort law is addressed in the immediately following paragraph discussing implied preemption.

[79] The conflict was discerned based upon the nature (*e.g.,* the language and structure of the regulatory text) and the safety-related objectives of FMVSS requirements in question and the impact of the State requirements on those objectives.

Regulations. The Regulatory Information Service Center publishes the Unified Agenda in April and October of each year. You may use the RIN contained in the heading at the beginning of this document to find this action in the Unified Agenda.

Plain Language

Executive Order 12866 requires each agency to write all rules in plain language. Application of the principles of plain language includes consideration of the following questions:

- Have we organized the material to suit the public's needs?
- Are the requirements in the rule clearly stated?
- Does the rule contain technical language or jargon that isn't clear?
- Would a different format (grouping and order of sections, use of headings, paragraphing) make the rule easier to understand?
- Would more (but shorter) sections be better?
- Could we improve clarity by adding tables, lists, or diagrams?
- What else could we do to make the rule easier to understand?

If you have any responses to these questions, please write to us with your views.

XI. Public Participation

How do I prepare and submit comments?

Your comments must be written and in English. To ensure that your comments are correctly filed in the Docket, please include the docket number of this document in your comments.

Your comments must not be more than 15 pages long. (49 CFR 553.21). We established this limit to encourage you to write your primary comments in a concise fashion. However, you may attach necessary additional documents to your comments. There is no limit on the length of the attachments.

Comments may also be submitted to the docket electronically by logging onto the Docket Management System Web site at *http://www.regulations.gov.* Follow the online instructions for submitting comments.

Please note that pursuant to the Data Quality Act, in order for substantive data to be relied upon and used by the agency, it must meet the information quality standards set forth in the OMB and DOT Data Quality Act guidelines. Accordingly, we encourage you to consult the guidelines in preparing your comments. OMB's guidelines may be accessed at *http://www.whitehouse.gov/omb/fedreg/reproducible.html.*

How can I be sure that my comments were received?

If you wish Docket Management to notify you upon its receipt of your comments, enclose a self-addressed, stamped postcard in the envelope containing your comments. Upon receiving your comments, Docket Management will return the postcard by mail.

How do I submit confidential business information?

If you wish to submit any information under a claim of confidentiality, you should submit three copies of your complete submission, including the information you claim to be confidential business information, to the Chief Counsel, NHTSA, at the address given above under **FOR FURTHER INFORMATION CONTACT**. In addition, you should submit a copy, from which you have deleted the claimed confidential business information, to the docket at the address given above under **ADDRESSES**. When you send a comment containing information claimed to be confidential business information, you should include a cover letter setting forth the information specified in our confidential business information regulation. (49 CFR part 512)

Will the agency consider late comments?

We will consider all comments received before the close of business on the comment closing date indicated above under **DATES**. To the extent possible, we will also consider comments that the docket receives after that date. If the docket receives a comment too late for us to consider in developing a final rule (assuming that one is issued), we will consider that comment as an informal suggestion for future rulemaking action.

How can I read the comments submitted by other people?

You may read the comments received by the docket at the address given above under **ADDRESSES**. The hours of the docket are indicated above in the same location. You may also see the comments on the Internet. To read the comments on the Internet, go to *http://www.regulations.gov.* Follow the online instructions for accessing the dockets.

Please note that even after the comment closing date, we will continue to file relevant information in the docket as it becomes available. Further, some people may submit late comments. Accordingly, we recommend that you periodically check the Docket for new material. You can arrange with the docket to be notified when others file comments in the docket. See *www.regulations.gov* for more information.

List of Subjects in 49 CFR Part 571

Imports, Motor vehicles, Motor vehicle safety.

In consideration of the foregoing, NHTSA proposes to amend 49 CFR part 571 as follows:

PART 571—FEDERAL MOTOR VEHICLE SAFETY STANDARDS

■ 1. The authority citation for part 571 continues to read as follows:

Authority: 49 U.S.C. 322, 30111, 30115, 30117, and 30166; delegation of authority at 49 CFR 1.95.

■ 2. In § 571.305:
■ a. Revise S1 and S2;
■ b. Under S4:
■ i. Add in alphabetical order definitions for ''Charge connector'', ''Direct contact'', ''Electrical protection barrier'', ''Exposed conductive part'', ''External electric power supply'', ''Fuel cell system'', ''Indirect contact'', ''Live part'', ''Luggage compartment'', ''Passenger compartment'', and ''Possible active driving mode'';
■ ii. Revise the definition of ''Propulsion system''; and
■ iii. Add in alphabetical order definitions for ''Protection degree IPXXB'', ''Protection degree IPXXD'', ''Service disconnect'', and ''Vehicle charge inlet'';
■ c. Revise S5.3 and S5.4; and
■ d. Add S5.4.1, S5.4.1.1, S5.4.1.1.1, S5.4.1.2, S5.4.1.3, S5.4.1.4, S5.4.2, S5.4.2.1, S5.4.2.2, S5.4.3, S5.4.3.1, S5.4.3.2, S5.4.3.3, S5.4.4, S5.4.5, S5.4.6, S5.4.6.1, S5.4.6.2, S5.4.6.3, S9, S9.1, S9.2, S9.3, and figures 6, 7a, 7b, and 8.

The revisions and additions read as follows:

§ 571.305 Standard No. 305; Electric-powered vehicles: electrolyte spillage and electrical shock protection.

S1. *Scope.* This standard specifies requirements for limitation of electrolyte spillage and retention of electric energy storage/conversion devices during and after a crash, and protection from harmful electric shock during and after a crash and during normal vehicle operation.

S2. *Purpose.* The purpose of this standard is to reduce deaths and injuries during and after a crash that occur because of electrolyte spillage from electric energy storage devices, intrusion of electric energy storage/conversion devices into the occupant compartment, and electrical shock, and to reduce deaths and injuries during

normal vehicle operation that occur because of electric shock.

* * * * *

S4. *Definitions.*

* * * * *

Charge connector is a conductive device that, by insertion into a vehicle charge inlet, establishes an electrical connection of the vehicle to the external electric power supply for the purpose of transferring energy and exchanging information.

Direct contact is the contact of persons with high voltage live parts.

* * * * *

Electrical protection barrier is the part providing protection against direct contact with live parts from any direction of access.

Exposed conductive part is the conductive part that can be touched under the provisions of the IPXXB protection degree and becomes electrically energized under isolation failure conditions. This includes parts under a cover that can be removed without using tools.

External electric power supply is a power supply external to the vehicle that provides electric power to charge the propulsion battery in the vehicle.

Fuel cell system is a system containing the fuel cell stack(s), air processing system, fuel flow control system, exhaust system, thermal management system, and water management system.

* * * * *

Indirect contact is the contact of persons with exposed conductive parts.

Live part is a conductive part of the vehicle that is electrically energized under normal vehicle operation.

Luggage compartment is the space in the vehicle for luggage accommodation, separated from the passenger compartment by the front or rear bulkhead and bounded by a roof, hood, floor, and side walls, as well as by the electrical barrier and enclosure provided for protecting the power train from direct contact with live parts.

Passenger compartment is the space for occupant accommodation that is bounded by the roof, floor, side walls, doors, outside glazing, front bulkhead and rear bulkhead or rear gate, as well as electrical barriers and enclosures provided for protecting the occupants from direct contact with live parts.

Possible active driving mode is the vehicle mode when application of pressure to the accelerator pedal (or activation of an equivalent control) or release of the brake system causes the electric power train to move the vehicle.

Propulsion system means an assembly of electric or electro-mechanical components or circuits that propel the vehicle using the energy that is supplied by a high voltage source. This includes, but is not limited to, electric motors, inverters/converters, and electronic controllers.

Protection degree IPXXB is protection from contact with high voltage live parts. It is tested by probing electrical protection barriers or enclosures with the jointed test finger probe, IPXXB, in Figure 7b.

Protection degree IPXXD is protection from contact with high voltage live parts. It is tested by probing electrical protection barriers or enclosures with the test wire probe, IPXXD, in Figure 7a.

Service disconnect is the device for deactivation of an electrical circuit when conducting checks and services of the vehicle electrical propulsion system.

* * * * *

Vehicle charge inlet is the device on the electric vehicle into which the charge connector is inserted for the purpose of transferring energy and exchanging information from an external electric power supply.

* * * * *

S5.3 *Electrical safety.* After each test specified in S6 of this standard, each high voltage source in a vehicle must meet the electrical isolation requirements of paragraph S5.3(a) of this section, the voltage level requirements of paragraph S5.3(b) of this section, or the physical barrier protection requirements of paragraph S5.3(c) of this section.

(a) The electrical isolation of the high voltage source, determined in accordance with the procedure specified in S7.6 of this section, must be greater than or equal to one of the following:

(1) 500 ohms/volt for an AC high voltage source; or

(2) 100 ohms/volt for an AC high voltage source if it is conductively connected to a DC high voltage source, but only if the AC high voltage source meets the physical barrier protection requirements specified in paragraph S5.3(c) of this section; or

(3) 100 ohms/volt for a DC high voltage source.

(b) The voltages V1, V2, and Vb of the high voltage source, measured according to the procedure specified in S7.7 of this section, must be less than or equal to 30 VAC for AC components or 60 VDC for DC components.

(c) Protection against electric shock by direct and indirect contact (physical barrier protection) shall be demonstrated by meeting the following three conditions:

(1) The high voltage source (AC or DC) meets the protection degree IPXXB when tested under the procedure specified in S9.1 of this section using the IPXXB test probe shown in Figures 7a and 7b to this section;

(2) The resistance between exposed conductive parts of the electrical protection barriers and the electrical chassis is less than 0.1 ohms when tested under the procedures specified in S9.2 of this section. In addition, the resistance between any two simultaneously reachable exposed conductive parts of the electrical protection barriers that are less than 2.5 meters from each other is less than 0.2 ohms when tested under the procedures specified in S9.2 of this section; and

(3) The voltages between the electrical protection barrier enclosing the high voltage source and other exposed conductive parts are less than or equal to 30 VAC or 60 VDC as measured in accordance with S9.3 of this section.

S5.4 *Electrical safety during normal vehicle operation.*

S5.4.1 *Protection against direct contact.*

S5.4.1.1 *Marking.* The symbol shown in Figure 6 to this section shall be visible on or near electric energy storage/conversion devices. The symbol in Figure 6 to this section shall also be visible on electrical protection barriers which, when removed, expose live parts of high voltage sources. The symbol shall be yellow and the bordering and the arrow shall be black.

S5.4.1.1.1 The marking is not required for electrical protection barriers that cannot be physically accessed, opened, or removed without the use of tools.

S5.4.1.2 *High voltage cables.* Cables for high voltage sources which are not located within enclosures shall be identified by having an outer covering with the color orange.

S5.4.1.3 *Service disconnect.* For a service disconnect which can be opened, disassembled, or removed without tools, protection degree IPXXB shall be provided when tested under procedures specified in S9.1 of this section using the IPXXB test probe shown in Figures 7a and 7b to this section.

S5.4.1.4 *Protection degree of high voltage sources and live parts.*

(a) Protection degree IPXXD shall be provided for live parts and high voltage sources inside the passenger or luggage compartment when tested under procedures specified in S9.1 of this section using the IPXXD test probe shown in Figure 7a to this section.

(b) Protection degree IPXXB shall be provided for live parts and high voltage sources in areas other than the passenger or luggage compartment when

tested under procedures specified in S9.1 of this section using the IPXXB test probe shown in Figures 7a and 7b to this section.

S5.4.2 *Protection against indirect contact.*

S5.4.2.1 The resistance between all exposed conductive parts and the electrical chassis shall be less than 0.1 ohms when tested under the procedures specified in S9.2 of this section.

S5.4.2.2 The resistance between any two simultaneously reachable exposed conductive parts of the electrical protection barriers that are less than 2.5 meters from each other shall not exceed 0.2 ohms when tested under the procedures specified in S9.2 of this section.

S5.4.3 *Electrical isolation.*

S5.4.3.1 *Electrical isolation of AC and DC high voltage sources.* The electrical isolation of a high voltage source, determined in accordance with the procedure specified in S7.6 of this section must be greater than or equal to one of the following:

(a) 500 ohms/volt for an AC high voltage source;

(b) 100 ohms/volt for an AC high voltage source if it is conductively connected to a DC high voltage source, but only if the AC high voltage source meets the requirements for protection against direct contact in S5.4.1.4 of this section and the protection from indirect contact in S5.4.2 of this section; or

(c) 100 ohms/volt for a DC high voltage source.

S5.4.3.2 *Exclusion of high voltage sources from electrical isolation requirements.* A high voltage source that is conductively connected to an electric energy storage device which is conductively connected to the electrical chassis and has a working voltage less than or equal to 60 VDC, is not required to meet the electrical isolation requirements in S5.4.3.1 of this section during normal vehicle operating conditions if the voltage between the high voltage source and the electrical chassis is less than or equal to 30 VAC or 60 VDC.

S5.4.3.3 *Isolation resistance of high voltage sources for charging the electric energy storage device.* For motor vehicles with an electric energy storage device that can be charged through a conductive connection with the grounded external electric power supply, the isolation resistance between the electrical chassis and the vehicle charge inlet and each high voltage source conductively connected to the vehicle charge inlet during charging of the electric energy storage device shall be a minimum of one million ohms when the charge connector is disconnected. The isolation resistance is determined in accordance with the procedure specified in S7.6 of this section.

S5.4.4 *Electrical isolation monitoring.* Each DC high voltage sources of vehicles with a fuel cell system shall be monitored by an electrical isolation monitoring system that displays a warning for loss of isolation when tested according to S8 of this section. The system must monitor its own readiness and the warning display must be visible to the driver seated in the driver's designated seating position.

S5.4.5 *Electric shock protection during charging.* For motor vehicles with an electric energy storage device that can be charged through a conductive connection with a grounded external electric power supply, a device to enable conductive connection of the electrical chassis to the earth ground shall be provided. This device shall enable connection to the earth ground before exterior voltage is applied to the vehicle and retain the connection until after the exterior voltage is removed from the vehicle.

S5.4.6 *Mitigating driver error.*

S5.4.6.1 *Indicator of possible active driving mode at start up.* At least a momentary indication shall be given to the driver when the vehicle is in possible active driving mode. This requirement does not apply under conditions where an internal combustion engine provides directly or indirectly the vehicle's propulsion power upon start up.

S5.4.6.2 *Indicator of possible active driving mode when leaving the vehicle.* When leaving the vehicle, the driver shall be informed by an audible or visual signal if the vehicle is still in the possible active driving mode.

S5.4.6.3 *Prevent drive-away during charging.* If the on-board electric energy storage device can be externally charged, vehicle movement by its own propulsion system shall not be possible as long as the charge connector of the external electric power supply is physically connected to the vehicle charge inlet.

* * * * *

S9 *Test methods for physical barrier protection from electric shock due to direct and indirect contact with high voltage sources.*

S9.1 *Test method to evaluate protection from direct contact with high voltage sources.*

(a) Any parts surrounding the high voltage components are opened, disassembled, or removed without the use of tools.

(b) The selected access probe is inserted into any gaps or openings of the electrical protection barrier with a test force of 10 N ± 1 N with the IPXXB probe or 1 to 2 N with the IPXXD probe. If partial or full penetration into the physical barrier occurs, the probe shall be placed as follows: Starting from the straight position, both joints of the test finger are rotated progressively through an angle of up to 90 degrees with respect to the axis of the adjoining section of the test finger and are placed in every possible position.

(c) A low voltage supply (of not less than 40 V and not more than 50 V) in series with a suitable lamp may be connected between the access probe and any high voltage live parts inside the physical barrier to indicate whether live parts were contacted.

(d) A mirror or fiberscope may be used to inspect whether the access probe touches high voltage parts inside the physical barrier.

S9.2 *Test method to evaluate protection against indirect contact with high voltage sources.*

(a) *Test method using a resistance tester.* The resistance tester is connected to the measuring points (the electrical chassis and any exposed conductive part of the vehicle or any two exposed conductive parts that are less than 2.5 meters from each other), and the resistance is measured using a resistance tester that can measure current levels of at least 0.1 Amperes with a resolution of 0.01 ohms or less.

(b) *Test method using a DC power supply, voltmeter and ammeter.*

(1) Connect the DC power supply, voltmeter and ammeter to the measuring points (the electrical chassis and any exposed conductive part or any two exposed conductive parts that are less than 2.5 meters from each other) as shown in Figure 8 to this section.

(2) Adjust the voltage of the DC power supply so that the current flow becomes more than 0.2 Amperes.

(3) Measure the current I and the voltage V shown in Figure 8 to this section.

(4) Calculate the resistance R according to the formula, R=V/I.

S9.3 *Test method to determine voltage between electrical protection barrier and exposed conductive parts, including electrical chassis, of the vehicle.*

(a) Connect the DC power supply and voltmeter to the measuring points (exposed conductive part of an electrical protection barrier and the electrical chassis or any other exposed conductive part of the vehicle).

(b) Measure the voltage.

(c) After completing the voltage measurements for all electrical protection barriers, the voltage differences between all exposed conductive parts of the protective barriers shall be calculated.

* * * * *

BILLING CODE 4910–59–P

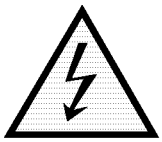

Figure 6. Marking of High Voltage Equipment.

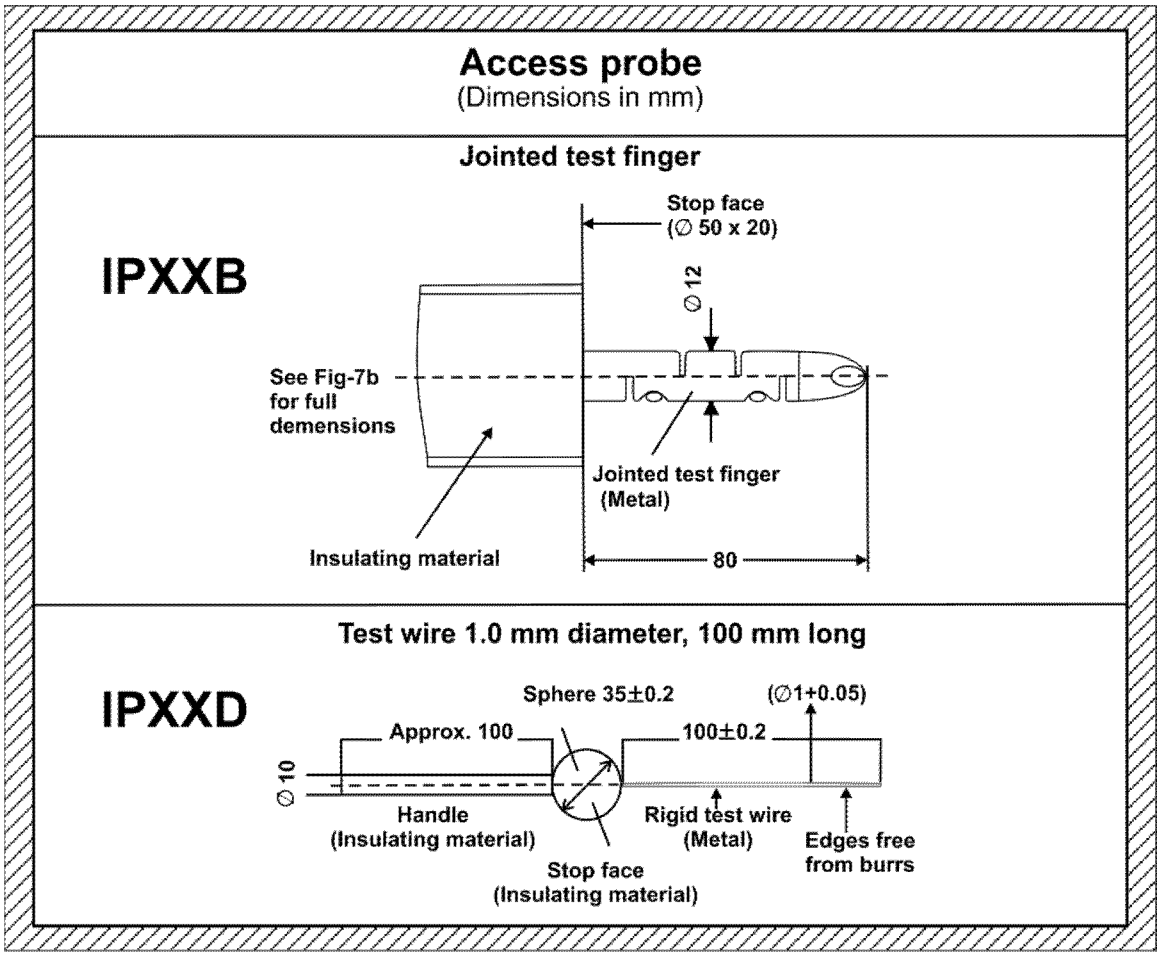

Figure 7a. Access Probes for the Tests of Direct Contact Protection

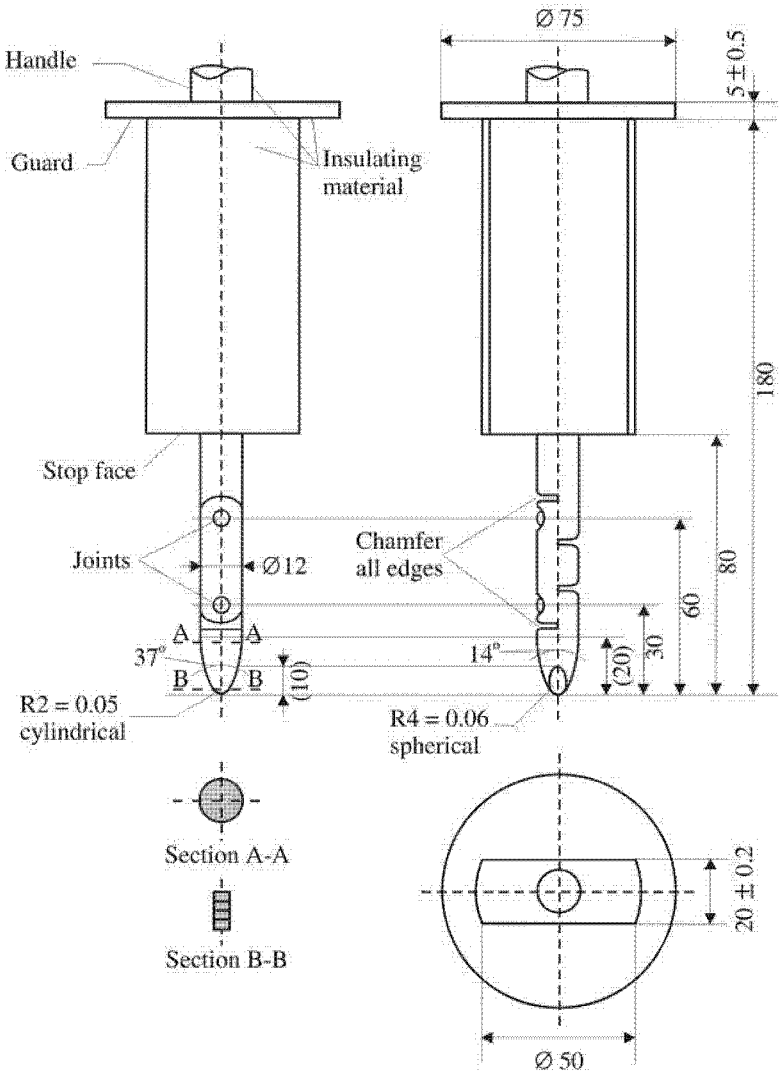

Material: metal, except where otherwise specified
Linear dimensions in millimeters
Tolerances on dimensions without specific tolerance:
on angles, 0/10 degrees
on linear dimensions:
up to 25 mm: 0/-0.05 mm
over 25 mm: ±0.2 mm
Both joints shall permit movement in the same plane and the same direction through an angle of 90° with a 0° to +10° tolerance.

Figure 7b. Jointed Test Finger IPXXB

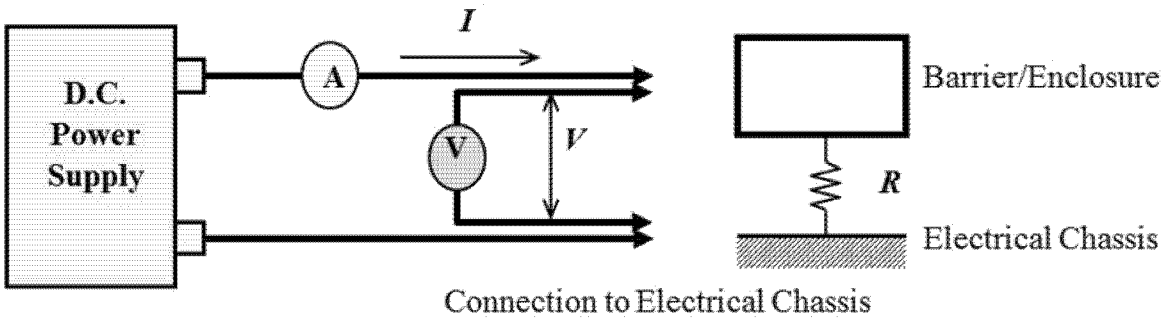

Figure 8. Connection to Determine Resistance between Physical Barrier and Electrical Chassis

Raymond R. Posten,
Associate Administrator for Rulemaking.
[FR Doc. 2016–05187 Filed 3–9–16; 8:45 am]
BILLING CODE 4910–59–C

DEPARTMENT OF COMMERCE

National Oceanic and Atmospheric Administration

50 CFR Part 660

[Docket No. 160126053–6053–01]

RIN 0648–BF74

Magnuson-Stevens Act Provisions; Fisheries off West Coast States; Pacific Coast Groundfish Fishery; 2016 Tribal Fishery for Pacific Whiting

AGENCY: National Marine Fisheries Service (NMFS), National Oceanic and Atmospheric Administration (NOAA), Commerce.

ACTION: Proposed rule; request for comments.

SUMMARY: NMFS issues this proposed rule for the 2016 Pacific whiting fishery under the authority of the Pacific Coast Groundfish Fishery Management Plan (FMP), the Magnuson Stevens Fishery Conservation and Management Act (Magnuson-Stevens Act), and the Pacific Whiting Act of 2006. This proposed rule would allocate 17.5% of the U.S. Total Allowable Catch of Pacific whiting for 2016 to Pacific Coast Indian tribes that have a Treaty right to harvest groundfish.

DATES: Comments on this proposed rule must be received no later than April 11, 2016.

ADDRESSES: You may submit comments on this document, identified by NOAA–NMFS–2016–0009, by any of the following methods:

- *Electronic Submission:* Submit all electronic public comments via the Federal eRulemaking Portal. Go to *www.regulations.gov/#!docketDetail;D=NOAA-NMFS-2016-0009,* click the ''Comment Now!'' icon, complete the required fields, and enter or attach your comments.
- *Mail:* William W. Stelle, Jr., Regional Administrator, Northwest Region, NMFS, 7600 Sand Point Way NE., Seattle, WA 98115–0070, Attn: Miako Ushio.

Instructions: Comments sent by any other method, to any other address or individual, or received after the end of the comment period, may not be considered by NMFS. All comments received are part of the public record and will generally be posted for public viewing on *www.regulations.gov* without change. All personal identifying information (*e.g.,* name, address, etc.), confidential business information, or otherwise sensitive information submitted voluntarily by the sender will be publicly accessible. NMFS will accept anonymous comments (enter ''N/A'' in the required fields if you wish to remain anonymous).

FOR FURTHER INFORMATION CONTACT: Miako Ushio (West Coast Region, NMFS), phone: 206–526–4644, and email: *miako.ushio@noaa.gov.*

SUPPLEMENTARY INFORMATION:

Electronic Access

This proposed rule is accessible via the Internet at the Office of the Federal Register Web site at *https://www.federalregister.gov.* Background information and documents are available at the NMFS West Coast Region Web site at *http://www.westcoast.fisheries.noaa.gov/fisheries/management/whiting/pacific_whiting.html* and at the Pacific Fishery Management Council's Web site at *http://www.pcouncil.org/.*

Background

The regulations at 50 CFR 660.50(d) establish the process by which the tribes with treaty fishing rights in the area covered by the Pacific Coast Groundfish Fishery Management Plan (FMP) request new allocations or regulations specific to the tribes, in writing, during the biennial harvest specifications and management measures process. The regulations state that the Secretary will develop tribal allocations and regulations in consultation with the affected tribe(s) and, insofar as possible, with tribal consensus. The procedures NMFS employs in implementing tribal treaty rights under the FMP were designed to provide a framework process by which NMFS can accommodate tribal treaty rights by setting aside appropriate amounts of fish in conjunction with the Pacific Fishery Management Council (Council) process for determining harvest specifications and management measures.

Since the FMP has been in place, NMFS has been allocating a portion of the U.S. total allowable catch (TAC) (called Optimum Yield (OY) or Annual Catch Limit (ACL) prior to 2012) of Pacific whiting to the tribal fishery, following the process established in 50 CFR 660.50(d). The tribal allocation is subtracted from the U.S. Pacific whiting TAC before allocation to the non-tribal sectors.

There are four tribes that can participate in the tribal whiting fishery: the Hoh Tribe, the Makah Tribe, the Quileute Tribe, and the Quinault Indian Nation (collectively, the ''Treaty Tribes''). The Hoh Tribe has not expressed an interest in participating to date. The Quileute Tribe and Quinault Indian Nation have expressed interest in participating in the whiting fishery. However, to date, only the Makah Tribe has prosecuted a tribal fishery for

Pacific whiting. They have harvested whiting since 1996 using midwater trawl gear. Tribal allocations have been based on discussions with the Treaty Tribes regarding their intent for those fishing years. Table 1 below provides a history of U.S. OYs and annual tribal allocation in metric tons (mt).

TABLE 1—U.S. OPTIMUM YIELDS (OYs) AND ANNUAL TRIBAL ALLOCATION IN METRIC TONS (mt)

Year	*U.S. OY*	*Tribal Allocation*
2006	269,069 mt	32,500 mt
2007	242,591 mt	35,000 mt
2008	269,545 mt	35,000 mt
2009	135,939 mt	50,000 mt
2010	193,935 mt	49,939 mt
2011	290,903 mt	66,908 mt
2012	186,037 mt TAC [1]	48,556 mt
2013	269,745 mt TAC	63,205 mt
2014	316,206 mt TAC	55,336 mt
2015	325,072 mt TAC	56,888 mt

[1] Beginning in 2012, the United States started using the term Total Allowable Catch, based on the Agreement between the Government of the United States of America and the Government of Canada on Pacific Hake/Whiting.

In 2009, NMFS, the states of Washington and Oregon, and the Treaty Tribes started a process to determine the long-term tribal allocation for Pacific whiting; however, no long-term allocation has been determined. In order to ensure Treaty Tribes continue to receive allocations, this rule proposes the 2016 tribal allocation of Pacific whiting. This is an interim allocation not intended to set precedent for future allocations.

Tribal Allocation for 2016

In exchanges between NMFS and the Treaty Tribes during 2015, the Makah Tribe indicated their intent to participate in the tribal whiting fishery in 2016. The Makah Tribe has requested 17.5% of the U.S. TAC. The Quileute Tribe and the Quinault Indian Nation indicated that they are not planning to participate in 2016. NMFS proposes a tribal allocation that accommodates the Makah request, specifically 17.5% of the U.S. TAC. NMFS believes that the current scientific information regarding the distribution and abundance of the coastal Pacific whiting stock suggests that 17.5% is within the range of the tribal treaty right to Pacific whiting.

The Joint Management Committee, which was established pursuant to the Agreement between the United States and Canada on Pacific Hake/Whiting (the Agreement), is anticipated to recommend the coastwide and corresponding U.S./Canada TACs no later than March 25, 2016. The U.S. TAC is 73.88% of the coastwide TAC. Until this TAC is set, NMFS cannot propose a specific amount for the tribal allocation. The whiting fishery typically begins in May, and the final rule establishing the whiting specifications for 2016 is anticipated to be published by early May. Therefore, in order to provide for public input on the tribal allocation, NMFS is issuing this proposed rule without the final 2016 TAC. However, to provide a basis for public input, NMFS is describing a range of potential tribal allocations in this proposed rule, applying the proposed approach to determining the tribal allocation to a range of potential TACs derived from historical experience.

In order to project a range of potential tribal allocations for 2016, NMFS is applying its proposed approach to determining the tribal allocation to the range of U.S. TACs over the last 10 years, 2006 through 2015 (plus or minus 25% to capture variability in stock abundance). The range of TACs in that time period was 135,939 mt (2009) to 325,072 mt (2015). Applying the 25% variability results in a range of potential TACs of 101,954 mt to 406,340 mt for 2016. Therefore, using the proposed allocation rate of 17.5%, the potential range of the tribal allocation for 2016 would between 17,842 and 71,110 mt.

This proposed rule would be implemented under authority of Section 305(d) of the Magnuson-Stevens Act, which gives the Secretary responsibility to ''carry out any fishery management plan or amendment approved or prepared by him, in accordance with the provisions of this Act.'' With this proposed rule, NMFS, acting on behalf of the Secretary, would ensure that the FMP is implemented in a manner consistent with treaty rights of four Northwest Tribes to fish in their ''usual and accustomed grounds and stations'' in common with non-tribal citizens. *United States* v. *Washington,* 384 F. Supp. 313 (W.D. 1974).

Classification

NMFS has preliminarily determined that the management measures for the 2016 Pacific whiting tribal fishery are consistent with the national standards of the Magnuson-Stevens Act and other applicable laws. In making the final determination, NMFS will take into account the data, views, and comments received during the comment period.

The Office of Management and Budget has determined that this proposed rule is not significant for purposes of Executive Order 12866.

As required by section 603 of the Regulatory Flexibility Act (RFA), an Initial Regulatory Flexibility Analysis (IRFA) was prepared. The IRFA describes the economic impact this proposed rule, if adopted, would have on small entities. A summary of the analysis follows. A copy of this analysis is available from NMFS.

Under the RFA, the term ''small entities'' includes small businesses, small organizations, and small governmental jurisdictions. The Small Business Administration (SBA) has established size criteria for entities involved in the fishing industry. A business involved in fish harvesting is a small business if it is independently owned and operated and not dominant in its field of operation (including its affiliates) and if it has combined annual receipts, not in excess of $20.5 million for all its affiliated operations worldwide (See 79 FR 33647; June 12, 2014). For marinas and charter/party boats, a small business now defined as one with annual receipts, not in excess of $7.5 million. For purposes of rulemaking, NMFS is applying the $20.5 million standard to catcher processors (C/Ps) because Pacific whiting C/Ps are involved in the commercial harvest of finfish. A wholesale business servicing the fishing industry is a small business if it employs 100 or fewer persons on a full time, part time, temporary, or other basis, at all its affiliated operations worldwide. Effective February 26, 2016,

a seafood processor is a small business if it is independently owned and operated, not dominant in its field of operation, and employs 750 or fewer persons on a full time, part time, temporary, or other basis, at all its affiliated operations worldwide (See NAICS 311710 at 81 FR 4469; January 26, 2016).

Small organizations. The RFA defines small organizations as any nonprofit enterprise that is independently owned and operated and is not dominant in its field.

Small governmental jurisdictions. The RFA defines small governmental jurisdictions as governments of cities, counties, towns, townships, villages, school districts, or special districts with populations of less than 50,000.

This proposed rule would allocate 17.5% of the U.S. Total Allowable Catch of Pacific whiting for 2016 to Pacific Coast Indian tribes that have a Treaty right to harvest groundfish. This allocation percentage was used for the 2015 fishery. The entities that this rule directly impacts are the Makah Tribe and the following in the non-tribal fisheries: Quota share (QS) holders in the Shorebased Individual Fishing Quota (IFQ) Program—Trawl Fishery; vessels in the Mothership Coop (MS) Program—Whiting At-sea Trawl Fishery; and the C/P Coop Whiting At-sea Trawl Fishery. These entities determine how much of their allocations are to be actually fished and what vessels are allowed to fish their allocations. This rule proposes to allocate fish to the Makah Tribe. Based on groundfish ex-vessel revenues and on tribal enrollments (the population size of each tribe), the Makah Tribe is considered a small entity.

Currently, the Shorebased IFQ Program is composed of 172 Quota Share permits/accounts, 152 vessel accounts, and 44 first receivers. The MS fishery is currently composed of a single coop, with six mothership processor permits, and 34 Mothership/Catcher-Vessel (MS/CV) endorsed permits, with three permits each having two catch history assignments. The C/P Program is composed of 10 C/P permits owned by three companies that have formed a single co-op. Many companies participate in two sectors and some participate in all three sectors. All of the 34 mothership catch history assignments are associated with a single mothership co-op and all ten of the catcher-processor permits are associated with a co-op. These co-ops are considered large entities from several perspectives; they have participants that are large entities, whiting co-op revenues exceed or have exceeded the $20.5 million, or co-op members are connected to American Fishing Act permits or co-ops where the NMFS Alaska Region has determined they are all large entities (79 FR 54597; September 12, 2014). After accounting for cross participation, multiple QS account holders, and affiliation through ownership, NMFS estimates that there are 103 non-tribal entities directly affected by these proposed regulations, 89 of which are considered ''small'' businesses.

For the years 2011 to 2015, the total whiting fishery (tribal and non-tribal) averaged harvests of approximately 205,000 mt annually, worth over $52 million in ex-vessel revenues. As the U.S. whiting TAC has been highly variable during this time, so have harvests. In the past five years, harvests have ranged from 160,000 mt (2012) to 264,000 mt (2014). Ex-vessel revenues have also varied in the same period, with annual ex-vessel revenues ranging from $25 million (2015) to $65 million (2013 and 2014). Total whiting harvest in 2015 was approximately 151,000 mt worth $25 million, at an ex-vessel price of $167 per mt. In 2014, harvest was 264,000 tons, and ex-vessel revenues were over $64 million with an average ex-vessel price of $240 per mt. The prices for whiting are largely determined by the world market for groundfish, because most of the whiting harvested is exported. Poor world market conditions led to a decrease in prices in 2015. There was no tribal catch of Pacific whiting in 2015, and overall, a lower percentage of the commercial TAC was harvested than in prior years.

The use of ex-vessel values does not take into account the wholesale or export value of the fishery, or the costs of harvesting and processing whiting into a finished product. The latest available economic data indicates that in 2012, motherships received $30.3 million in wholesale revenue, C/Ps received $51 million, and shoreside processors $55 million. The Pacific whiting fishery harvests almost exclusively Pacific whiting. While bycatch of other species occurs, the fishery is constrained by bycatch limits on key overfished species. This is a high-volume fishery with low ex-vessel prices per pound. This fishery also has seasonal aspects based on the distribution of whiting off the west coast.

Since 1996, there has been a tribal allocation of the U.S. Pacific whiting TAC. Tribal fisheries undertake a mixture of fishing activities that are similar to the activities that non-tribal fisheries undertake. Tribal harvests have been delivered to both shoreside plants and at-sea processors. These processing facilities also process fish harvested by non-tribal fisheries.

This proposed rule would allocate 17.5% of Pacific whiting to the tribal fishery, and would ultimately determine how much is left for allocation to the non-tribal sectors. The amount of whiting allocated to both the tribal and non-tribal sectors is based on the U.S. TAC. From the U.S. TAC, small amounts of whiting that account for research catch and for bycatch in other fisheries are deducted. The amount of the tribal allocation is also deducted directly from the TAC. After accounting for these deductions, the remainder is the commercial harvest guideline. This guideline is then allocated among the three non-tribal sectors as follows: 34 percent for the C/P Coop Program; 24 percent for the MS Coop Program; and 42 percent for the Shorebased IFQ Program.

The effect of the tribal allocation on non-tribal fisheries will depend on the level of tribal harvests relative to their allocation and the reapportioning process. Total whiting harvest in 2015 was approximately 151,000 mt worth $25 million, at an ex-vessel price of $167 per mt. Assuming a similar TAC and ex-vessel price in 2016, if the Treaty Tribes were to harvest 17.5%, the approximate value of that harvest would be $4.4 million. If the Treaty Tribes do not harvest their entire allocation, there are opportunities during the year to reapportion unharvested tribal amounts to the non-tribal fleets. For example, in 2015, NMFS executed one such reapportionment. The best available information through September 14, 2015, indicated that at least 30,000 mt of the tribal allocation would not be harvested by December 31, 2015. To allow for full utilization the resource, NMFS reapportioned 30,000 mt on September 16, 2015, to the Shorebased IFQ Program, C/P Coop and MS Coop in proportion to each sector's original allocation. Reapportioning this amount was expected to allow for greater attainment of the TAC while not limiting tribal harvest opportunities for the remainder of the year. The revised Pacific whiting allocations for 2015 following the reapportionment were: Tribal 26,888 mt; C/P Coop 100,873 mt; MS Coop 71,204 mt; and Shorebased IFQ Program 214,607 mt.

NMFS considered two alternatives for this action: the ''No-Action'' and the ''Proposed Action.'' NMFS did not consider a broader range of alternatives to the proposed allocation. The tribal allocation is based primarily on the requests of the tribes. These requests reflect the level of participation in the

fishery that will allow them to exercise their treaty right to fish for whiting. Under the Proposed Action alternative, NMFS proposes to set the tribal allocation percentage at 17.5%, as requested by the tribes. This would yield a tribal allocation of between 17,842 and 71,110 mt for 2016. Consideration of a percentage lower than the tribal request of 17.5% is not appropriate in this instance. As a matter of policy, NMFS has historically supported the harvest levels requested by the tribes. Based on the information available to NMFS, the tribal request is within their tribal treaty rights. A higher percentage would arguably also be within the scope of the treaty right. However, a higher percentage would unnecessarily limit the non-tribal fishery.

Under the No-Action alternative, NMFS would not make an allocation to the tribal sector. This alternative was considered, but the regulatory framework provides for a tribal allocation on an annual basis only. Therefore, the no-action alternative would result in no allocation of Pacific whiting to the tribal sector in 2016, which would be inconsistent with NMFS' responsibility to manage the fishery consistent with the tribes' treaty rights. Given that there is a tribal request for allocation in 2016, this alternative received no further consideration.

NMFS believes this proposed rule would not adversely affect small entities. The reapportioning process allows unharvested tribal allocations of whiting, fished by small entities, to be fished by the non-tribal fleets, benefitting both large and small entities. Nonetheless, NMFS has prepared an IRFA and is requesting comments on this conclusion. See **ADDRESSES**.

There are no reporting, recordkeeping or other compliance requirements in the proposed rule.

No Federal rules have been identified that duplicate, overlap, or conflict with this action.

Pursuant to Executive Order 13175, this proposed rule was developed after meaningful consultation and collaboration with tribal officials from the area covered by the FMP. Consistent with the Magnuson-Stevens Act at 16 U.S.C. 1852(b)(5), one of the voting members of the Pacific Council is a representative of an Indian tribe with federally recognized fishing rights from the area of the Council's jurisdiction. In addition, NMFS has coordinated specifically with the tribes interested in the whiting fishery regarding the issues addressed by this rule.

List of Subjects in 50 CFR Part 660

Fisheries, Fishing, Indian fisheries.

Dated: March 3, 2016.

Samuel D. Rauch III,

Deputy Assistant Administrator for Regulatory Programs, National Marine Fisheries Service.

For the reasons set out in the preamble, 50 CFR part 660 is proposed to be amended as follows:

PART 660—FISHERIES OFF WEST COAST STATES

■ 1. The authority citation for part 660 continues to read as follows:

Authority: 16 U.S.C. 1801 *et seq.* and 16 U.S.C. 773 *et seq.,* and 16 U.S.C. 7001 *et seq.*

■ 2. In § 660.50, revise paragraph (f)(4) to read as follows:

§ 660.50 Pacific Coast treaty Indian fisheries.

* * * * *

(f) * * *

(4) *Pacific whiting.* The tribal allocation for 2016 will be 17.5% of the U.S. TAC.

* * * * *

[FR Doc. 2016–05254 Filed 3–9–16; 8:45 am]

BILLING CODE 3510–22–P

Notices

Federal Register

Vol. 81, No. 47

Thursday, March 10, 2016

This section of the FEDERAL REGISTER contains documents other than rules or proposed rules that are applicable to the public. Notices of hearings and investigations, committee meetings, agency decisions and rulings, delegations of authority, filing of petitions and applications and agency statements of organization and functions are examples of documents appearing in this section.

DEPARTMENT OF AGRICULTURE

Agricultural Marketing Service

[Document Number AMS–NOP–16–0003; NOP–15–09]

National Organic Program; Notice of Availability of National List Petition Guidelines

AGENCY: Agricultural Marketing Service, USDA.

ACTION: Notice.

SUMMARY: The Agricultural Marketing Service (AMS) National Organic Program (NOP) is announcing the availability of NOP 3011, National List Petition Guidelines. These guidelines apply to petitions that request an amendment to the NOP's National List of Allowed and Prohibited Substances (National List). The National List identifies the synthetic substances that may be used and the nonsynthetic substances that may not be used in organic production. The National List also identifies the non-organic substances that may be used in organic handling. The National List Petition Guidelines are based upon the May 2, 2014, recommendations of the National Organic Standards Board and modify the information to be included in a petition. This notice also clarifies the information to be submitted for all types of petitions that request amendments to the National List. This notice and NOP 3011 replace the previous petition guidelines that were published in the **Federal Register** on January 18, 2007 (72 FR 2167).

DATES: *Effective Date:* The petition guidelines announced by this notice of availability are effective on March 11, 2016.

ADDRESSES: Petitions should be submitted to National List Manager, USDA–AMS–NOP, 1400 Independence Avenue SW., Room 2642–So., Ag Stop 0268, Washington, DC 20250–0268 or via email to *nosb@ams.usda.gov.* Electronic submission by email is preferred.

FOR FURTHER INFORMATION CONTACT: National List Manager, National Organic Program, 1400 Independence Avenue SW., Room 2642–South, STOP 0268; Washington, DC 20250–0268; Telephone (202) 720–3252; Fax: (202) 205–7808.

SUPPLEMENTARY INFORMATION:

I. Background

The Organic Foods Production Act of 1990 (OFPA), as amended (7 U.S.C. 6501 *et seq.*), authorizes the establishment of the National Organic Program including the National List of Allowed and Prohibited Substances (National List). This National List identifies the synthetic substances that may be used and the nonsynthetic substances that may not be used in organic production, and also identifies the non-organic substances that may be used in organic handling. The OFPA and USDA organic regulations, in section 205.105, specifically prohibit the use of any synthetic substance for organic production and handling unless the synthetic substance is on the National List. Section 205.105 also requires that any non-organic, nonsynthetic substance used in organic handling must also be on the National List. Since the USDA organic regulations became effective on October 21, 2002, the National List has been amended through rulemaking by the National List Petition Process and the National List Sunset Process. The guidelines contained in this notice apply only to the National List Petition Process.

The ability for any person to petition to amend the National List is authorized by the OFPA (7 U.S.C. 6518(n)) and the USDA organic regulations, in section 205.607. This authorization provides that any person may petition the National Organic Standards Board (NOSB) for the purpose of having a substance evaluated by the NOSB for recommendation to the Secretary for inclusion on or removal from the National List. The NOSB is authorized to review petitions under specified evaluation criteria in OFPA (7 U.S.C. 6518(m)), and forward recommendations for amending the National List to the Secretary.

At its April 29–May 2, 2014, public meeting in San Antonio, Texas, the NOSB issued two recommendations concerning the National List petition process. This notice announces the availability of revised petition guidelines which are based upon these NOSB recommendations.

II. NOSB Recommendations

Confidential Business Information

The NOSB issued a recommendation at its April 29–May 2, 2014, public meeting addressing the inclusion of confidential business information (CBI) in petitions.[1] The NOSB recommended that the National List petition process be revised to eliminate the provision for confidential business information. The NOSB indicated the importance of transparency in the petition process, the right of the public to fully know the materials included in or on certified organic products, and the potential for an untenable administrative burden of management of CBI. AMS has reviewed the recommendation and has accepted the recommendation. The updated petition guidelines do not contain the previous provision that allowed for the submission of confidential business information by petitioners.

Update of Petition Process

The NOSB also issued a recommendation at its April 29–May 2, 2014, public meeting that addressed other changes to the petition and technical review process.[2] The NOSB recommended several updates to clarify how to submit complete petitions, explain to petitioners what to expect in the petition process, make the review process for the NOSB clearer and more consistent, and provide transparency about these processes to the public. AMS has reviewed the recommendation and has updated the current guidelines to align with the NOSB recommendation. Updates in the NOSB recommendation that pertain to parts of

[1] NOSB Recommendation, Confidential Business Information in Petitions, May 2, 2014. Available on the NOP Web site at *http://www.ams.usda.gov/sites/default/files/media/NOP%20Materials%20Final%20Rec%20Confidential%20Business%20Info.pdf.*

[2] NOSB Recommendation, Update of the Petition and Technical Review Process, May 2, 2014. Available on the NOP Web site at *http://www.ams.usda.gov/sites/default/files/media/NOP%20Materials%20Final%20Rec%20Update%20on%20Petition%20and%20TR%20Process.pdf.*

the NOSB Policy and Procedures Manual and Technical Review Process will be addressed through separate actions. The changes affecting the National List petition guidelines include the following: (1) Requesting the petitioners indicate the OFPA category for substances used in organic production; (2) abbreviated requirements for petitions that request a change to annotations for substances already listed; (3) elimination of references to Confidential Business Information; (4) clarification of requirements for petitions requesting the addition, removal, or amendment of an annotation for a listed substance; and (5) other language changes for clarity. As part of the revision to the petition guidelines, NOP has also included within NOP 3011 answers to common questions about the petition process, such as the role of the NOP, role of the NOSB, and the criteria used to evaluate petitions.

III. Availability of National List Petition Guidelines

The procedure document titled ''National List Petition Guidelines'' (NOP 3011) is now available from the NOP through ''The Program Handbook: Guidance and Instructions for Certifying Agents and Certified Operations.'' This Handbook provides those who own, manage, or certify organic operations with guidance and instructions that can assist them in complying with the USDA organic regulations. The current edition of the Program Handbook is available online at *http://www.ams.usda.gov/.*

IV. Electronic Access

Persons with access to Internet may obtain the petition guidelines at the NOP's Web site at *http://www.ams.usda.gov/nop.* Requests for hard copies of the petition guidelines can be obtained by submitting a written request to the person listed in the **ADDRESSES** section of this Notice.

Authority: 7 U.S.C. 6501–6522.

Dated: March 3, 2016.

Elanor Starmer,

Acting Administrator, Agricultural Marketing Service.

[FR Doc. 2016–05399 Filed 3–9–16; 8:45 am]

BILLING CODE 3410–02–P

DEPARTMENT OF AGRICULTURE

Animal and Plant Health Inspection Service

[Docket No. APHIS–2015–0106]

Notice of Request for Revision to and Extension of Approval of an Information Collection; Importation of Sand Pears From China

AGENCY: Animal and Plant Health Inspection Service, USDA.

ACTION: Revision to and extension of approval of an information collection; comment request.

SUMMARY: In accordance with the Paperwork Reduction Act of 1995, this notice announces the Animal and Plant Health Inspection Service's intention to request a revision to and extension of approval of an information collection associated with the regulations for the importation of sand pears from China into the United States.

DATES: We will consider all comments that we receive on or before May 9, 2016.

ADDRESSES: You may submit comments by either of the following methods:

- *Federal eRulemaking Portal:* Go to *http://www.regulations.gov/#!docketDetail;D=APHIS-2015-0106.*
- *Postal Mail/Commercial Delivery:* Send your comment to Docket No. APHIS–2015–0106, Regulatory Analysis and Development, PPD, APHIS, Station 3A–03.8, 4700 River Road Unit 118, Riverdale, MD 20737–1238.

Supporting documents and any comments we receive on this docket may be viewed at *http://www.regulations.gov/#!docketDetail;D=APHIS-2015-0106* or in our reading room, which is located in room 1141 of the USDA South Building, 14th Street and Independence Avenue SW., Washington, DC. Normal reading room hours are 8 a.m. to 4:30 p.m., Monday through Friday, except holidays. To be sure someone is there to help you, please call (202) 799–7039 before coming.

FOR FURTHER INFORMATION CONTACT: For information on the regulations for the importation of sand pears from China, contact Mr. Marc Philips, Senior Regulatory Policy Specialist, RCC, IRM, PHP, PPQ, APHIS, 4700 River Road Unit 133, Riverdale, MD 20737; (301) 851–2114. For copies of more detailed information on the information collection, contact Ms. Kimberly Hardy, APHIS' Information Collection Coordinator, at (301) 851–2727.

SUPPLEMENTARY INFORMATION:

Title: Importation of Sand Pears From China.

OMB Control Number: 0579–0390.

Type of Request: Revision to and extension of approval of an information collection.

Abstract: The Plant Protection Act (PPA, 7 U.S.C. 7701 *et seq.*) authorizes the Secretary of Agriculture to restrict the importation, entry, or interstate movement of plants, plant products, and other articles to prevent the introduction of plant pests into the United States or their dissemination within the United States. Regulations authorized by the PPA concerning the importation of fruits and vegetables into the United States from certain parts of the world are contained in ''Subpart—Fruits and Vegetables'' (7 CFR 319.56–1 through 319.56–74).

Section 319.56–57 of the regulations provides the requirements for the importation of sand pears from China into the United States. The regulations require the use of information collection activities, including test and certification of propagative material, trapping system, operational workplan, recordkeeping, production site registration, inspection of registered production sites, investigation for recertification of production sites, packinghouse registration and inspection, packinghouse tracking system, certification of treatment and review of treatment records, handling procedures, notification of detections by registered production sites and packinghouses, audits, monitoring of treatment, mitigation measures at production sites and packinghouses, labeling, numbered seals, and phytosanitary certificates with an additional declaration.

When comparing the regulations to the information collection activities that were previously approved, we found that several of the information collection activities above were not included. We have adjusted the overall estimates of burden accordingly.

We are asking the Office of Management and Budget (OMB) to approve our use of these information collection activities, as described, for an additional 3 years.

The purpose of this notice is to solicit comments from the public (as well as affected agencies) concerning our information collection. These comments will help us:

(1) Evaluate whether the collection of information is necessary for the proper performance of the functions of the Agency, including whether the information will have practical utility;

(2) Evaluate the accuracy of our estimate of the burden of the collection

of information, including the validity of the methodology and assumptions used;

(3) Enhance the quality, utility, and clarity of the information to be collected; and

(4) Minimize the burden of the collection of information on those who are to respond, through use, as appropriate, of automated, electronic, mechanical, and other collection technologies; *e.g.,* permitting electronic submission of responses.

Estimate of burden: The public reporting burden for this collection of information is estimated to average 0.006 hours per response.

Respondents: Producers and importers of sand pears from China and national plant protection organization officials of China.

Estimated annual number of respondents: 29.

Estimated annual number of responses per respondent: 2,083.

Estimated annual number of responses: 60,411.

Estimated total annual burden on respondents: 384 hours. (Due to averaging, the total annual burden hours may not equal the product of the annual number of responses multiplied by the reporting burden per response.)

All responses to this notice will be summarized and included in the request for OMB approval. All comments will also become a matter of public record.

Done in Washington, DC, this 4th day of March 2016.

Kevin Shea,

Administrator, Animal and Plant Health Inspection Service.

[FR Doc. 2016–05462 Filed 3–9–16; 8:45 am]

BILLING CODE 3410–34–P

DEPARTMENT OF AGRICULTURE

Animal and Plant Health Inspection Service

[Docket No. APHIS–2016–0001]

Notice of Request for Revision to and Extension of Approval of an Information Collection; Importation of Fresh Bananas From the Philippines Into the Continental United States

AGENCY: Animal and Plant Health Inspection Service, USDA.

ACTION: Revision to and extension of approval of an information collection; comment request.

SUMMARY: In accordance with the Paperwork Reduction Act of 1995, this notice announces the Animal and Plant Health Inspection Service's intention to request a revision to and extension of approval of an information collection associated with the regulations for the importation of fresh bananas from the Philippines into the continental United States.

DATES: We will consider all comments that we receive on or before May 9, 2016.

ADDRESSES: You may submit comments by either of the following methods:

- *Federal eRulemaking Portal:* Go to *http://www.regulations.gov/#!docketDetail;D=APHIS-2016-0001.*
- *Postal Mail/Commercial Delivery:* Send your comment to Docket No. APHIS–2016–0001, Regulatory Analysis and Development, PPD, APHIS, Station 3A–03.8, 4700 River Road Unit 118, Riverdale, MD 20737–1238.

Supporting documents and any comments we receive on this docket may be viewed at *http://www.regulations.gov/#!docketDetail;D=APHIS-2016-0001* or in our reading room, which is located in room 1141 of the USDA South Building, 14th Street and Independence Avenue SW., Washington, DC. Normal reading room hours are 8 a.m. to 4:30 p.m., Monday through Friday, except holidays. To be sure someone is there to help you, please call (202) 799–7039 before coming.

FOR FURTHER INFORMATION CONTACT: For information on the regulations for the importation of fresh bananas from the Philippines into the continental United States, contact Mr. Marc Philips, Senior Regulatory Policy Specialist, RCC, IRM, PHP, PPQ, APHIS, 4700 River Road Unit 133, Riverdale, MD 20737; (301) 851–2114. For copies of more detailed information on the information collection, contact Ms. Kimberly Hardy, APHIS' Information Collection Coordinator, at (301) 851–2727.

SUPPLEMENTARY INFORMATION:

Title: Importation of Fresh Bananas From the Philippines Into the Continental United States.

OMB Control Number: 0579–0394.

Type of Request: Revision to and extension of approval of an information collection.

Abstract: The Plant Protection Act (PPA, 7 U.S.C. 7701 *et seq.*) authorizes the Secretary of Agriculture to restrict the importation, entry, or interstate movement of plants, plant products, and other articles to prevent the introduction of plant pests into the United States or their dissemination within the United States. Regulations authorized by the PPA concerning the importation of fruits and vegetables into the United States from certain parts of the world are contained in ''Subpart—Fruits and Vegetables'' (7 CFR 319.56–1 through 319.56–74).

Section 319.56–58 of the regulations provides the requirements for the importation of bananas from the Philippines into the continental United States. The regulations require the use of information collection activities, including operational workplans, recordkeeping, production site registration, monitoring and oversight of registered production sites, fruit fly trapping to establish places of production with low pest prevalence, investigations, certification of harvest stage, carton markings, shipping documents, and phytosanitary certificates with an additional declaration.

When comparing the regulations to the information collection activities that were previously approved, we found that several of the information collection activities above were not included. We have adjusted the overall estimates of burden accordingly.

We are asking the Office of Management and Budget (OMB) to approve our use of these information collection activities, as described, for an additional 3 years.

The purpose of this notice is to solicit comments from the public (as well as affected agencies) concerning our information collection. These comments will help us:

(1) Evaluate whether the collection of information is necessary for the proper performance of the functions of the Agency, including whether the information will have practical utility;

(2) Evaluate the accuracy of our estimate of the burden of the collection of information, including the validity of the methodology and assumptions used;

(3) Enhance the quality, utility, and clarity of the information to be collected; and

(4) Minimize the burden of the collection of information on those who are to respond, through use, as appropriate, of automated, electronic, mechanical, and other collection technologies; *e.g.,* permitting electronic submission of responses.

Estimate of burden: The public reporting burden for this collection of information is estimated to average 0.0076 hours per response.

Respondents: Producers and importers of bananas from the Philippines and national plant protection organization officials of the Philippines.

Estimated annual number of respondents: 41.

Estimated annual number of responses per respondent: 3,924.

Estimated annual number of responses: 160,891.

Estimated total annual burden on respondents: 1,219 hours. (Due to averaging, the total annual burden hours may not equal the product of the annual number of responses multiplied by the reporting burden per response.)

All responses to this notice will be summarized and included in the request for OMB approval. All comments will also become a matter of public record.

Done in Washington, DC, this 4th day of March 2016.

Kevin Shea,

Administrator, Animal and Plant Health Inspection Service.

[FR Doc. 2016–05464 Filed 3–9–16; 8:45 am]

BILLING CODE 3410–34–P

DEPARTMENT OF AGRICULTURE

Food and Nutrition Service

Agency Information Collection Activities: Proposed Collection; Comment Request—Information Collection for the National School Lunch Program

AGENCY: Food and Nutrition Service (FNS), USDA.

ACTION: Notice.

SUMMARY: In accordance with the Paperwork Reduction Act of 1995, this notice invites the general public and other public agencies to comment on this information collection. This is a revision of the FNS–640 Administrative Review Data Report associated with the currently approved information collection for the National School Lunch Program.

DATES: Written comments must be received on or before May 9, 2016.

ADDRESSES: Comments are invited on: (a) Whether the proposed collection of information is necessary for the proper performance of the functions of the agency, including whether the information shall have practical utility; (b) the accuracy of the agency's estimate of the burden of the proposed collection of information, including the validity of the methodology and assumptions that were used; (c) ways to enhance the quality, utility, and clarity of the information to be collected; and (d) ways to minimize the burden of the collection of information on those who are to respond, including use of appropriate automated, electronic, mechanical, or other technological collection techniques or other forms of information technology.

Comments may be sent to: Sarah Smith-Holmes, Division Director, Program Monitoring and Operational Support, Child Nutrition Division, Food and Nutrition Service, U.S. Department of Agriculture, 3101 Park Center Drive, Alexandria, VA 22302–1594. Comments may also be submitted via fax to the attention of Sarah Smith-Holmes at 703–305–2879 or via email to *Sarah.Smith-Holmes@fns.usda.gov.* Comments will also be accepted through the Federal eRulemaking Portal. Go to *http://www.regulations.gov,* and follow the online instructions for submitting comments electronically.

All written comments will be open for public inspection at the office of the Food and Nutrition Service during regular business hours (8:30 a.m. to 5 p.m., Monday through Friday) at 3101 Park Center Drive, Alexandria, Virginia 22302.

All responses to this notice will be summarized and included in the request for Office of Management and Budget approval. All comments will be a matter of public record.

FOR FURTHER INFORMATION CONTACT: Requests for additional information or copies of this information collection should be directed to Sarah Smith-Holmes at the address indicated above or by phone at 703–605–3223.

SUPPLEMENTARY INFORMATION:

Title: 7 CFR Part 210, National School Lunch Program.

Form: FNS–640.

OMB Control Number: 0584–0006.

Expiration Date: March 31, 2016.

Type of Request: Revision of a currently approved collection.

Abstract: The Richard B. Russell National School Lunch Act (NSLA), as amended, authorizes the National School Lunch Program (NSLP) to safeguard the health and well-being of the nation's children and provide free or reduced price school lunches to qualified students through subsidies to schools. Section 10 of the Child Nutrition Act of 1966 (42 U.S.C. 1779) requires the Secretary of Agriculture to prescribe such regulations as deemed necessary to carry out this Act and the NSLA (42 U.S.C. 1751 *et seq.*). Pursuant to that provision, the Secretary has issued 7 CFR part 210, which sets forth policies and procedures for the administration and operation of the NSLP. The United States Department of Agriculture (USDA) provides States with general and special cash assistance and donations of foods to assist schools in serving nutritious lunches to children each school day. Participating State agencies must conduct administrative reviews to monitor compliance with Program requirements. FNS collects Program data from State agencies on FNS forms that have been approved by OMB. The FNS–640 form collects information from these administrative reviews conducted by the State agency. The FNS–640 Coordinated Review Effort (CRE) Data Report is currently approved as part of this information collection. The title of the FNS–640 form is being changed to ''Administrative Review Data Report'' and FNS is proposing revisions to reflect changes to the administrative review process and revisions to incorporate the form into an electronic report for the Food Program Reporting System (FPRS). Upon approval of the proposed revisions by OMB, the reporting burden for this form will be merged into the FPRS information collection, OMB control # 0584–0594, expiration date 06/30/2017. The reporting and recordkeeping burden hours associated with this revision are not changing.

This information collection is required to administer and operate this program in accordance with the NSLA. All of the reporting and recordkeeping requirements associated with the NSLP are currently approved by the Office of Management and Budget and are in force. This is a revision of the currently approved information collection.

Affected Public: (1) State agencies; (2) School Food Authorities; and (3) schools.

Number of Respondents: 121,210 (56 State agencies (SAs), 19,822 school food authorities (SFAs), and 101,332 schools.

Number of Responses per Respondent: 4.14573.

Total Annual Responses: 502,504.

Reporting Time per Response: 0.7038758.

Estimated Annual Reporting Burden: 353,700.

Number of Recordkeepers: 121,210 (56 SAs, 19,822 SFAs, 101,332 schools).

Number of Records per Record Keeper: 406.294827.

Estimated Total Number of Records: 49,246,996.

Recordkeeping Time per Response: 0.19326446.

Total Estimated Recordkeeping Burden: 9,517,694.

Annual Recordkeeping and Reporting Burden: 9,871,395.

Current OMB Inventory for Part 210: 9,871,395.

Difference (change in burden with this renewal): 0.

Refer to the table below for estimated total annual burden for each type of respondent.

Affected public	Estimated number of respondents	Number of responses per respondent	Total annual responses	Estimated average hours per response	Estimated total burden (hours)
Reporting					
State Agencies	56	122	6,832	7.7762	53,127
School Food Authorities	19,822	15	293,008	0.956653	280,307
Schools	101,332	2	202,664	0.1	20,266
Total Estimated Reporting Burden	121,210		502,504		353,700
Recordkeeping					
State Agencies	56	1419	79,464	1.5913	126,451
School Food Authorities	19,822	20	396,440	4.5380	1,799,045
Schools	101,332	481	48,771,092	0.15567	7,592,199
Total Estimated Recordkeeping Burden	121,210		49,246,996		9,517,695
Total of Reporting and Recordkeeping					
Reporting	121,210	4.14573	502,504	0.703875	353,700
Recordkeeping	121,210	510.264	49,246,996	0.184631055	9,517,695
Total			49,749,500		9,871,395

Dated: February 29, 2016.

Telora T. Dean,

Acting Administrator, Food and Nutrition Service.

[FR Doc. 2016–05312 Filed 3–9–16; 8:45 am]

BILLING CODE 3410–30–P

DEPARTMENT OF AGRICULTURE

Food and Nutrition Service

Agency Information Collection Activities: Study of WIC Food Package Costs and Cost Containment

AGENCY: Food and Nutrition Service (FNS), USDA.

ACTION: Notice.

SUMMARY: In accordance with the Paperwork Reduction Act of 1995, this notice invites the general public and other public agencies to comment on this proposed information collection. This collection is a new Information Collection for The Study of WIC Food Package Costs and Cost Containment.

DATES: Written comments on this notice must be received on or before May 9, 2016.

ADDRESSES: Comments are invited on: (a) Whether the proposed collection of information is necessary for the proper performance of the functions of the agency, including whether the information shall have practical utility; (b) the accuracy of the agency's estimate of the burden of the proposed collection of information, including the validity of the methodology and assumptions that were used; (c) ways to enhance the quality, utility, and clarity of the information to be collected; and (d) ways to minimize the burden of the collection of information on those who are to respond, including use of appropriate automated, electronic, mechanical, or other technological collection techniques or other forms of information technology. Comments may be sent to: Anna Potter, Policy Analyst, Office of Policy Support, Food and Nutrition Service, U.S. Department of Agriculture, 3101 Park Center Drive, Room 1004, Alexandria, VA 22302. Comments may also be submitted via fax to the attention of Anna Potter at 703–305–2576 or via email to *anna.potter@fns.usda.gov*. Comments will also be accepted through the Federal eRulemaking Portal. Go to *http://www.regulations.gov,* and follow the online instructions for submitting comments electronically.

All responses to this notice will be summarized and included in the request for Office of Management and Budget approval. All comments will be a matter of public record.

FOR FURTHER INFORMATION CONTACT: Requests for additional information or copies of this information collection should be directed to Anna Potter at 703–305–2719.

SUPPLEMENTARY INFORMATION:

Title: Study of WIC Food Package Costs and Cost Containment.

Form Number: N/A.

OMB Number: Not Yet Assigned.

Expiration Date: Not Yet Determined.

Type of Request: New collection.

Abstract: The Special Supplemental Nutrition Program for Women, Infants, and Children (WIC) provides supplemental foods to safeguard the health of low-income pregnant and post-partum women, infants, and children up to 5 years of age who are at nutritional risk. In an effort to ensure the best use of available funds and to provide for participation by eligible individuals, WIC State agencies (SAs) are responsible for implementing food package and other cost containment measures. FNS has funded this study to gather information on the types of cost-containment practices used by the 90 WIC SAs, assess the effectiveness of various practices, and identify those practices that constrain the cost of WIC foods with minimal increases to administrative costs and no adverse effects on WIC program outcomes such as participant satisfaction, retention, and consumption of WIC foods. The findings will be used by FNS to share with WIC SAs food item cost containment practices that are effective at reducing WIC food costs.

The information collection subject to this notice includes the following:

1. Telephone interviews with WIC directors in all 90 WIC SAs: Needed to obtain information on cost containment measures, reasons for implementing certain cost containment strategies and not others, opinions on effects on program outcomes, and challenges of implementing and maintaining measures.

2. Collection of administrative costs of practices, administrative WIC data, and electronic benefit transfer (EBT) data in 12 WIC SAs: Administrative data are needed to assess administrative costs and examine participant characteristics, food package prescriptions, indicators of health, and income; EBT data are

needed to examine WIC food selections, benefit redemption, and WIC food costs.

3. Telephone interviews with 2,895 WIC participants in 12 WIC SAs: Needed to provide information on WIC participants' satisfaction with WIC foods, consumption, and preferences; access to WIC vendors and food package items; specific special diets or food allergies; and demographic characteristics.

4. Telephone interviews with 375 former WIC participants in 3 WIC SAs: Needed to provide information on whether/which cost containment practices may have contributed to WIC participants leaving the program and why.

Affected Public: State, local, and tribal governments; individuals/households.

Estimated Number of Respondents: The estimated total number of respondents is 3,372. This total includes 90 WIC directors; 12 WIC SA staff; 2,895 WIC participants; and 375 former WIC participants.

Estimated Number of Responses per Respondent: The WIC directors, WIC participants, and former WIC participants will respond once to one telephone survey. The 12 WIC SA staff will respond twice to provide administrative data at two points in time (in one year). All respondents will be contacted with advance communications (letters, emails, and/or phone calls), and WIC directors and WIC SA staff will also be contacted with follow-up communications (reminders and thank-you emails).

Estimated Total Annual Responses: The estimated number of total annual responses is 9,863, including advance communications, completed and attempted interviews, data collections, and follow-up communications. The 9,863 responses are based on the sum of 8,372 advance communications, completed interviews, data collections, and follow-up communications, and 1,491 attempted contacts and interviews.

Estimated Time per Response: Response times overall may vary from 0.05 hours to 2 hours, depending on the activity and respondent group. The estimated time per interview (or administrative data collection) ranges from 0.33 hours to 2 hours, depending on actual activity and respondent group. The overall average time per respondent is 0.21 hours (13 minutes). Specifically, public reporting burden for this collection of information is estimated to average—

- 0.92 hours (55 minutes) for each of the 90 WIC directors (this includes 10 minutes for advance and follow-up activities and 45 minutes to complete the telephone interview).
- 5 hours (300 minutes) for each of the 12 WIC SA staff (this includes 60 minutes for advance and follow-up activities and 4 hours to gather administrative and EBT data and information on the administrative costs of practices).
- 0.6 hours (36 minutes) for each of the 4,136 WIC participants sampled for the survey (this includes 3 minutes for advance communication, 30 minutes for those who complete the telephone interview, and 3 minutes for those who do not complete the interview).
- 0.43 (26 minutes) for each of the 625 former WIC participants sampled for the survey (this includes 3 minutes for advance communication, 20 minutes for those who complete the telephone interview, and 3 minutes for those who do not complete the interview).

Estimated Total Annual Burden on Respondents: The estimated total annual burden is estimated to be 2,086 hours (including advance and follow-up communication, completed and attempted interviews, and completed data collection). See the table below for estimated total annual burden for each type of respondent.

Data collection activity	Respondents	Estimated number of respondents	Frequency of		Average burden hours per response	Total annual burden estimate (hours)
			Response	Total annual responses		
Advance communications (letter/email)	WIC directors	90	1	90	0.083	7.5
Telephone interview	WIC directors	90	1	90	0.75	67.5
Follow-up communications (reminder/thank-you emails).	WIC directors	90	1	90	0.083	7.5
Advance communications (letter/email/phone call).	WIC SA staff	12	2	24	0.5	12
Administrative and EBT data collection and submission.	WIC SA staff	12	2	24	4	96
Follow-up communications (reminder or clarification emails/phone calls, thank-you emails).	WIC SA staff	12	2	24	0.5	12
Advance communications (letter)	WIC participants	4,136	1	4,136	0.05	206.8
Telephone survey: completed interviews	WIC participants	2,895	1	2,895	0.50	1,447.5
Telephone survey: attempted interviews	WIC participants	1,241	1	1,241	0.05	62.0
Advance letters	WIC former participants.	625	1	625	0.05	31.3
Telephone survey: completed interviews	WIC former participants.	375	1	375	0.33	123.8
Telephone survey: attempted interviews	WIC former participants.	250	1	250	0.05	12.5
Total		3,372		9,863	0.21	2,086.3

Dated: February 25, 2016.

Audrey Rowe,

Administrator, Food and Nutrition Service.

[FR Doc. 2016–05338 Filed 3–9–16; 8:45 am]

BILLING CODE 3410–30–P

DEPARTMENT OF COMMERCE

Submission for OMB Review; Comment Request

On behalf of the Committee for the Implementation of Textile Agreements (CITA), the Department of Commerce will submit to the Office of Management and Budget (OMB) for clearance the following proposal for collection of information under the provisions of the Paperwork Reduction Act (44 U.S.C. Chapter 35).

Agency: Committee for the Implementation of Textile Agreements.

Title: Interim Procedures for Considering Requests under the Commercial Availability Provision of the United States-Panama Trade Promotion Agreement.

Form Number(s): N/A.

OMB Control Number: 0625–0273.

Type of Request: Regular submission.

Burden Hours: 89.

Number of Respondents: 16 (10 for Requests; 3 for Responses; 3 for Rebuttals).

Average Hours per Response: 8 hours per Request; 2 hours per Response; and 1 hour per Rebuttal.

Needs and Uses:

Title II, Section 203(o) of the United States-Panama Trade Promotion Agreement Implementation Act (the ''Act'') [Pub. L. 112–43] implements the commercial availability provision provided for in Article 3.25 of the United States-Panama Trade Promotion Agreement (the ''Agreement''). The Agreement entered into force on October 31, 2012. Subject to the rules of origin in Annex 4.1 of the Agreement, and pursuant to the textile provisions of the Agreement, a fabric, yarn, or fiber produced in Panama or the United States and traded between the two countries is entitled to duty-free tariff treatment. Annex 3.25 of the Agreement also lists specific fabrics, yarns, and fibers that the two countries agreed are not available in commercial quantities in a timely manner from producers in Panama or the United States. The items listed in Annex 3.25 are commercially unavailable fabrics, yarns, and fibers. Articles containing these items are entitled to duty-free or preferential treatment despite containing inputs not produced in Panama or the United States.

The list of commercially unavailable fabrics, yarns, and fibers may be changed pursuant to the commercial availability provision in Chapter 3, Article 3.25, Paragraphs 4–6 of the Agreement. Under this provision, interested entities from Panama or the United States have the right to request that a specific fabric, yarn, or fiber be added to, or removed from, the list of commercially unavailable fabrics, yarns, and fibers in Annex 3.25 of the Agreement.

Pursuant to Chapter 3, Article 3.25, paragraph 6 of the Agreement, which requires that the President publish procedures for parties to exercise the right to make these requests, Section 203(o)(4) of the Act authorizes the President to establish procedures to modify the list of fabrics, yarns, or fibers not available in commercial quantities in a timely manner in either the United States or Panama as set out in Annex 3.25 of the Agreement. The President delegated the responsibility for publishing the procedures and administering commercial availability requests to the Committee for the Implementation of Textile Agreements (''CITA''), which issues procedures and acts on requests through the U.S. Department of Commerce, Office of Textiles and Apparel (''OTEXA'') (See Proclamation No. 8894, 77 FR 66507, November 5, 2012).

The intent of the Commercial Availability Procedures is to foster the use of U.S. and regional products by implementing procedures that allow products to be placed on or removed from a product list, in a timely manner, and in a manner that is consistent with normal business practice. The procedures are intended to facilitate the transmission of requests; allow the market to indicate the availability of the supply of products that are the subject of requests; make available promptly, to interested entities and the public, information regarding the requests for products and offers received for those products; ensure wide participation by interested entities and parties; allow for careful review and consideration of information provided to substantiate requests and responses; and provide timely public dissemination of information used by CITA in making commercial availability determinations.

CITA must collect certain information about fabric, yarn, or fiber technical specifications and the production capabilities of Panamanian and U.S. textile producers to determine whether certain fabrics, yarns, or fibers are available in commercial quantities in a timely manner in the United States or Panama, subject to Section 203(o) of the Act.

Affected Public: Business or other for-profit.

Frequency: Varies.

Respondent's Obligation: Voluntary.

OMB Desk Officer: Wendy Liberante, (202) 395–3647.

Copies of the above information collection proposal can be obtained by calling or writing Jennifer Jessup, Departmental Paperwork Clearance Officer, (202) 482–0336, Department of Commerce, Room 6616, 14th and Constitution Avenue NW., Washington, DC 20230 (or via the Internet at *JJessup@doc.gov.*

Written comments and recommendations for the proposed information collection should be sent within 30 days of publication of this notice to OIRA *Submission@omg.eop.gov* or fax to (202) 075–5806.

Dated: March 7, 2016.

Glenna Mickelson,

Management Analyst, Office of the Chief Information Officer.

[FR Doc. 2016–05375 Filed 3–9–16; 8:45 am]

BILLING CODE 3510–DS–P

DEPARTMENT OF COMMERCE

Submission for OMB Review; Comment Request

On behalf of the Committee for the Implementation of Textile Agreements (CITA), the Department of Commerce will submit to the Office of Management and Budget (OMB) for clearance the following proposal for collection of information under the provisions of the Paperwork Reduction Act (44 U.S.C. chapter 35).

Agency: Committee for the Implementation of Textile Agreements.

Title: Interim Procedures for Considering Requests from the Public for Textile and Apparel Safeguard Actions on Imports from Panama.

Form Number(s): N/A.

OMB Control Number: 0625–0274.

Type of Request: Regular submission.

Burden Hours: 24.

Number of Respondents: 6 (1 for Request; 5 for Comments).

Average Hours per Response: 4 hours for a Request; and 4 hours for each Comment.

Average Annual Cost to Public: $960.

Needs and Uses: Title III, subtitle B, section 321 through section 328 of the United States-Panama Trade Promotion Agreement Implementation Act (the ''Act'') [Pub. L. 112–43] implements the textile and apparel safeguard provisions, provided for in Article 3.24 of the United States-Panama Trade Promotion Agreement (the ''Agreement''). This safeguard mechanism applies when, as a result of the elimination of a customs duty under the Agreement, a Panamanian textile or apparel article is being imported into the United States in such increased quantities, in absolute terms or relative to the domestic market

for that article, and under such conditions as to cause serious damage or actual threat thereof to a U.S. industry producing a like or directly competitive article. In these circumstances, Article 3.24 permits the United States to increase duties on the imported article from Panama to a level that does not exceed the lesser of the prevailing U.S. normal trade relations (NTR)/most-favored-nation (MFN) duty rate for the article or the U.S. NTR/MFN duty rate in effect on the day the Agreement entered into force.

The Statement of Administrative Action accompanying the Act provides that the Committee for the Implementation of Textile Agreements (CITA) will issue procedures for requesting such safeguard measures, for making its determinations under section 322(a) of the Act, and for providing relief under section 322(b) of the Act.

In Proclamation No. 8894 (77 FR 66507, November 5, 2012), the President delegated to CITA his authority under subtitle B of title III of the Act with respect to textile and apparel safeguard measures.

CITA must collect information in order to determine whether a domestic textile or apparel industry is being adversely impacted by imports of these products from Panama, thereby allowing CITA to take corrective action to protect the viability of the domestic textile or apparel industry, subject to section 322(b) of the Act.

Affected Public: Individuals or households; businesses or other for-profit organizations.

Frequency: On occasion.

Respondent's Obligation: Voluntary.

Copies of the above information collection proposal can be obtained by calling or writing Jennifer Jessup, Departmental Paperwork Clearance Officer, (202) 482–0336, Department of Commerce, Room 6616, 14th and Constitution Avenue NW, Washington, DC 20230 (or via the Internet at *jjessup@doc.gov*).

Written comments and recommendations for the proposed information collection should be sent within 30 days of publication of this notice to OIRA *Submission@omb.eop.gov* or fax to (202) 975–5806.

Dated: March 7, 2016.

Glenna Mickelson,

Management Analyst, Office of the Chief Information Officer.

[FR Doc. 2016–05376 Filed 3–9–16; 8:45 am]

BILLING CODE 3510–DS–P

DEPARTMENT OF COMMERCE

Economics and Statistics Administration

Commerce Data Advisory Council Meeting

AGENCY: Economic and Statistics Administration, Department of Commerce.

ACTION: Notice of Public Meeting.

SUMMARY: The Economic and Statistics Administration (ESA) is giving notice of the fourth meeting of the Commerce Data Advisory Council (CDAC). The CDAC will discuss economic data as well as other Council matters. The CDAC will meet in a plenary session on May 5th and 6th, 2016. Last-minute changes to the schedule are possible, which could prevent giving advance public notice of schedule adjustments.

DATES: May 5–6, 2016. On May 5th, the meeting will begin at approximately 9:00 a.m. and end at approximately 5:00 p.m. (ET). On May 6th, the meeting will begin at approximately 9:00 a.m. and end at approximately 1:00 p.m. (ET).

ADDRESSES: The meeting will be held at Google—New York, 76 9th Avenue, New York, NY 10011.

The meeting is open to the public. Members of the public are welcome to observe the business of the meeting in person or via webcast on the CDAC Web site linked to *http://www.esa.gov.* A public comment session is scheduled on Friday, May 6th, 2016. The public is invited to make statements or ask questions in person. The public may also submit statements or questions via the CDAC Twitter handle: #CDACMTG, the CDAC email address, or: *DataAdvisoryCouncil@doc.gov* (subject line ''MAY 2016 CDAC Meeting Public Comment''), or by letter to the Director of External Communication and DFO, CDAC, Department of Commerce, Economics and Statistics Administration, 1401 Constitution Ave. NW., Washington, DC 20230. Submissions by letter will be included in the record for the meeting if received by Wednesday, April 27, 2016.

Entry Requirements: If you plan to attend the meeting in person, you must complete registration on line no later than Wednesday, April 27, 2016.

http://www.eventbrite.com/e/department-of-commerce-data-advisory-council-cdac-may-2016-meeting-tickets-22470209000

The meeting is physically accessible to persons with disabilities. Requests for sign language interpretation or other auxiliary aids should be directed to the Director of External Communication as soon as possible, preferably two weeks prior to the meeting.

Seating is available to the public on a first-come, first-served basis.

FOR FURTHER INFORMATION CONTACT: Burton Reist, *BReist@doc.gov*, Director of External Communication and DFO, CDAC, Department of Commerce, Economics and Statistics Administration, 1401 Constitution Ave. NW., Washington, DC 20230, telephone (202) 482–3331.

SUPPLEMENTARY INFORMATION: The CDAC is comprised of 19 members, the Commerce Chief Data Officer, and the Economic and Statistics Administration. The Council provides an organized and continuing channel of communication between recognized experts in the data industry (collection, compilation, analysis, dissemination and privacy protection) and the Department of Commerce. The CDAC provides advice and recommendations, to include process and infrastructure improvements, to the Secretary, DOC and the DOC data-bureau leadership on ways to make Commerce data easier to find, access, use, combine and disseminate. The aim of this advice shall be to maximize the value of Commerce data to all users including governments, businesses, communities, academia, and individuals.

The Committee is established in accordance with the Federal Advisory Committee Act (Title 5, United States Code, Appendix 2, Section 10(a)(b)).

Dated: March 2, 2016.

Austin Durrer,

Chief of Staff for Under Secretary for Economic Affairs, Economics and Statistics Administration.

[FR Doc. 2016–05314 Filed 3–9–16; 8:45 am]

BILLING CODE P

DEPARTMENT OF COMMERCE

International Trade Administration

[A–122–856, A–570–032]

Certain Iron Mechanical Transfer Drive Components From Canada and the People's Republic of China: Postponement of Preliminary Determinations of Antidumping Duty Investigations

AGENCY: Enforcement and Compliance, International Trade Administration, Department of Commerce.

DATES: Effective March 10, 2016.

FOR FURTHER INFORMATION CONTACT: Stephen Baily at (202) 482–0193 (Canada); Krisha Hill or Jonathan Hill at (202) 482–4037 and (202) 482–3518, respectively (the People's Republic of

China (the PRC)); AD/CVD Operations, Enforcement and Compliance, International Trade Administration, U.S. Department of Commerce, 14th Street and Constitution Avenue NW., Washington, DC 20230.

SUPPLEMENTARY INFORMATION:

Background

On November 25, 2015, the Department of Commerce (Department) initiated antidumping duty investigations on certain iron mechanical transfer drive components from Canada and the PRC.[1] Section 733(b)(1)(A) of the Tariff Act of 1930, as amended (the Act), and 19 CFR 351.205(b)(1) state the Department will make a preliminary determination no later than 140 days after the date of the initiation. The current deadline for the preliminary determinations of these investigations is no later than April 11, 2016.[2]

Postponement of Preliminary Determinations

On February 19, 2016, TB Woods Incorporated (Petitioner) made a timely request, pursuant to 19 CFR 351.205(e), for postponement of the preliminary determinations, in order to provide the Department with sufficient time to develop the record in these proceedings through additional questionnaires, which Petitioner will in turn need time to analyze and possibly comment on. Because there are no compelling reasons to deny Petitioner's request, in accordance with section 733(c)(1)(A) of the Act, the Department is postponing the deadline for the preliminary determinations by 50 days.

For the reasons stated above, the Department, in accordance with section 733(c)(1)(A) of the Act, is postponing the deadline for the preliminary determinations to no later than 190 days after the date on which the Department initiated these investigations. Therefore, the new deadline for the preliminary determinations is May 31, 2016. In accordance with section 735(a)(1) of the Act, the deadline for the final determinations of these investigations will continue to be 75 days after the date of the preliminary determinations, unless postponed at a later date.

[1] *See Certain Iron Mechanical Transfer Drive Components from Canada and the People's Republic of China: Initiation of Less-Than-Fair-Investigations,* 80 FR 73716 (November 25, 2015).

[2] The current deadline of April 11, 2016, accounts for the four-day tolling of deadlines pursuant to inclement weather in January 2016. *See* January 27, 2016, Memorandum to the Record from Ron Lorentzen, Acting Assistant Secretary for Enforcement and Compliance, entitled ''Tolling of Administrative Deadlines as a Result of the Government Closure during Snowstorm 'Jonas'.''

This notice is issued and published pursuant to section 733(c)(2) of the Act and 19 CFR 351.205(f)(1).

Dated: March 2, 2016.

Paul Piquado,

Assistant Secretary for Enforcement and Compliance.

[FR Doc. 2016–05448 Filed 3–9–16; 8:45 am]

BILLING CODE 3510–DS–P

DEPARTMENT OF COMMERCE

International Trade Administration

[A–570–928]

Uncovered Innerspring Units From the People's Republic of China: Preliminary Results of the Antidumping Duty Administrative Review; 2014–2015

AGENCY: Enforcement and Compliance, International Trade Administration, Department of Commerce.

SUMMARY: The Department of Commerce (the ''Department'') is conducting an administrative review of the antidumping duty order on uncovered innerspring units from the People's Republic of China (''PRC''), for the period of review (''POR''), February 1, 2014, to January 31, 2015. The Department preliminarily determines that Macao Commercial and Industrial Spring Mattress Manufacturer (''Macao Commercial'') had no reviewable shipments of subject merchandise during the POR. We also preliminarily determine that East Grace Corporation (''East Grace'') has not established its entitlement to separate rate status and, therefore, is being treated as part of the PRC-wide entity. Interested parties are invited to comment on these preliminary results.

DATES: *Effective Date:* March 10, 2016.

FOR FURTHER INFORMATION CONTACT: Kenneth Hawkins, AD/CVD Operations, Office V, Enforcement and Compliance, International Trade Administration, Department of Commerce, 14th Street and Constitution Avenue NW., Washington, DC 20230; telephone: (202) 482–6491.

SUPPLEMENTARY INFORMATION:

Background

On February 19, 2009, the Department published in the **Federal Register** an antidumping duty order on uncovered innerspring units from the PRC.[1] On June 30, 2014, the Department received a request from Petitioner[2] to conduct an administrative review of East Grace and Macao Commercial.[3] On April 3, 2015, the Department initiated this review based on Petitioner's review request.[4] On May 11, 2015, the Department issued its standard antidumping duty questionnaires to East Grace and Macao Commercial.[5] Macao Commercial provided timely responses to the Department's initial and supplemental questionnaires. East Grace did not respond to the Department's standard questionnaire and has not participated in this proceeding.

Scope of the Order

The merchandise subject to the order is uncovered innerspring units composed of a series of individual metal springs joined together in sizes corresponding to the sizes of adult mattresses (*e.g.,* twin, twin long, full, full long, queen, California king and king) and units used in smaller constructions, such as crib and youth mattresses. Uncovered innersprings are classified under subheading 9404.29.9010 and have also been classified under subheadings 9404.10.0000, 9404.29.9005, 9404.29.9011, 7326.20.0070, 7320.20.5010, 7320.90.5010, or 7326.20.0071 of the Harmonized Tariff Schedule of the United States (''HTSUS''). The HTSUS subheadings are provided for convenience and customs purposes only; the written description of the scope of the order is dispositive.[6]

[1] *See Notice of Antidumping Duty Order: Uncovered Innerspring Units from the People's Republic of China,* 74 FR 7661 (February 19, 2009) (''*Order*'').

[2] The Petitioner is Leggett & Platt Inc. (hereinafter ''Petitioner'').

[3] *See* Request for Antidumping Administrative Review of the Antidumping Duty Order on Uncovered Innerspring Units from the People's Republic of China, dated February 27, 2015.

[4] *See Initiation of Antidumping and Countervailing Duty Administrative Reviews,* 80 FR 18202 (April 3, 2015) (''*Initiation Notice*''). We note that the *Initiation Notice* appeared to identify ''Macao Commercial'' and ''Industrial Spring Mattress Manufacturer'' as two separate companies. However, the name of the single company for which a review was requested was actually ''Macao Commercial and Industrial Spring Mattress Manufacturer,'' and we clarify now that this is the correct name of the company under review.

[5] *See* Letter to East Grace Corporation, dated May 11, 2015, and Letter to Macao Commercial and Industrial Spring Mattress Manufacturer, dated May 11, 2015.

[6] For a full description of the scope of the *Order, see* Decision Memorandum from Christian Marsh, Deputy Assistant Secretary for Antidumping and Countervailing Duty Operations, to Paul Piquado, Assistant Secretary for Enforcement and Compliance, entitled ''Preliminary Results of 2014–2015 Antidumping Duty Administrative Review: Uncovered Innerspring Units from the People's Republic of China'' (''Preliminary Decision Memorandum''), issued concurrently with and adopted by this notice.

Methodology

The Department conducted this review in accordance with section 751(a)(1)(B) of the Tariff Act of 1930, as amended (the Act). For a full description of the methodology underlying our conclusions, *see* the Preliminary Decision Memorandum.[7] The Preliminary Decision Memorandum is a public document and is on file electronically *via* Enforcement and Compliance's Antidumping and Countervailing Duty Centralized Electronic Service System (''ACCESS''). ACCESS is available to registered users at *http://access.trade.gov,* and is available to all parties in the Central Records Unit, room B8024 of the main Department of Commerce building. In addition, a complete version of the Preliminary Decision Memorandum can be accessed directly on the internet at *http://www.trade.gov/enforcement/.* The signed Preliminary Decision Memorandum and the electronic versions of the Preliminary Decision Memorandum are identical in content.

Preliminary Determination of No Shipments

In its certified response to the Department's standard antidumping duty questionnaire, Macao Commercial stated that it had no shipments of PRC origin innersprings to the United States during the POR. Between June 6, 2015 and December 24, 2015, the Department issued supplemental questionnaires to Macao Commercial to verify this no shipments claim. Additionally, to corroborate Macao Commercial's no shipments claim, the Department submitted a formal query to U.S. Customs & Border Protection (''CBP''), the results of which did not provide any evidence that contradicts Macao Commercial's claim of no shipments. Thus, the Department preliminarily determines that Macao Commercial had no shipments of innerspring units of PRC origin to the United States during the POR and, therefore, had no reviewable entries.[8] In addition, consistent with the Department's practice in nonmarket economy cases, the Department finds that it is appropriate not to rescind the review, in part, in these circumstances, but rather to complete the review with respect to Macao Commercial and issue appropriate instructions to CBP based on the final results of the review.[9]

Companies That Did Not Establish Their Eligibility for a Separate Rate

In our *Initiation Notice,* we stated, ''{f}or exporters and producers who submit a separate-rate status application or certification and subsequently are selected as mandatory respondents, these exporters and producers will no longer be eligible for separate rate status unless they respond to all parts of the questionnaire as mandatory respondents.''[10] East Grace was selected as a mandatory respondent in the instant review, but East Grace failed to respond to the Department's antidumping duty questionnaire, and East Grace did not submit a no-shipments certification. Therefore, we preliminarily find that East Grace is no longer eligible for separate rate status and that the PRC-wide entity includes East Grace.[11]

We also note that the Department's change in policy [12] regarding conditional review of the PRC-wide entity applies to this administrative review.[13] Under this policy, the PRC-wide entity will not be under review unless a party specifically requests, or the Department self-initiates, a review of the entity. Because no party requested a review of the PRC-wide entity in this review, the PRC-wide entity is not under review and therefore its rate is not subject to change. The rate previously established for the PRC-wide entity in this proceeding is 234.51 percent.

Public Comment and Opportunity To Request a Hearing [14]

Interested parties may submit case briefs within 30 days after the date of publication of these preliminary results of review.[15] Rebuttals to case briefs, which must be limited to issues raised in the case briefs, must be filed within five days after the time limit for filing case briefs.[16] Parties who submit arguments are requested to submit with the argument (a) a statement of the issue, (b) a brief summary of the argument, and (c) a table of authorities.[17] Parties submitting briefs should do so pursuant to the Department's electronic filing system, ACCESS.

Any interested party may request a hearing within 30 days of publication of this notice.[18] Hearing requests should contain the following information: (1) The party's name, address, and telephone number; (2) the number of participants; and (3) a list of the issues to be discussed. Oral presentations will be limited to issues raised in the briefs.[19] If a request for a hearing is made, parties will be notified of the time and date for the hearing to be held at the U.S. Department of Commerce, 14th Street and Constitution Avenue NW., Washington, DC 20230.[20]

The Department intends to issue the final results of this administrative review, which will include the results of our analysis of any issues raised in case briefs, within 120 days of publication of these preliminary results in the **Federal Register**, unless extended, pursuant to section 751(a)(3)(A) of the Act.

Assessment Rates

Upon issuance of the final results, the Department will determine, and CBP shall assess, antidumping duties on all appropriate entries covered by this review.[21] The Department intends to issue assessment instructions to CBP 15 days after the publication date of the final results of this review. We intend to instruct CBP to liquidate relevant entries from the PRC-wide entity (including East Grace) at the current rate for the PRC-wide entity (*i.e.,* 234.51 percent). For Macao Commercial, which we preliminarily find had no shipments during the POR, we intend to instruct CBP to liquidate any suspended entries of subject merchandise that entered under that exporter's case number (*i.e.,*

[7] A list of topics discussed in the Preliminary Decision Memorandum is provided at Appendix I to this notice.

[8] For more detail *see* Preliminary Decision Memorandum.

[9] *See Non-Market Economy Antidumping Proceedings: Assessment of Antidumping Duties,* 76 FR 65694, 65694–95 (October 24, 2011).

[10] *See Initiation Notice,* 80 FR at 18203.

[11] *See* section 776(b) of the Act.

[12] *See Antidumping Proceedings: Announcement of Change in Department Practice for Respondent Selection in Antidumping Duty Proceedings and Conditional Review of the Nonmarket Economy Entity in NME Antidumping Duty Proceedings,* 78 FR 65963 (November 4, 2013).

[13] Under this policy, the PRC-wide entity will not be under review unless a party specifically requests, or the Department self-initiates, a review of the entity. Because no party requested a review of the PRC-wide entity in this review, the entity is not under review.

[14] Normally, the Department discloses to interested parties the calculations performed in connection with a preliminary results result of review within five days of the date of publication of the notice of preliminary results in the **Federal Register**, in accordance with 19 CFR 351.224(b). However, because the Department has preliminarily determined that East Grace is ineligible for a separate rate and that Macao Commercial had no shipments during the POR, there are no calculations to disclose.

[15] *See* 19 CFR 351.309(c)(1)(ii).

[16] *See* 19 CFR 351.309(d).

[17] *See* 19 CFR 351.309(c)(2), (d)(2).

[18] *See* 19 CFR 351.310(c).

[19] *Id.*

[20] *See* 19 CFR 351.310(d).

[21] *See* 19 CFR 351.212(b).

at that exporter's rate) at the PRC-wide rate.[22]

Cash Deposit Requirements

The following cash deposit requirements will be effective upon publication of the final results of this review for shipments of the subject merchandise from the PRC entered, or withdrawn from warehouse, for consumption on or after the publication date, as provided by sections 751(a)(2)(C) of the Act: (1) For any companies listed that have a separate rate, the cash deposit rate will be that established in the final results of this review (except, if the rate is zero or *de minimis,* then zero cash deposit will be required); (2) for previously investigated or reviewed PRC and non-PRC exporters not listed that received a separate rate in a prior segment of this proceeding, the cash deposit rate will continue to be the existing exporter-specific rate; (3) for all PRC exporters of subject merchandise that have not been found to be entitled to a separate rate, the cash deposit rate will be that for the PRC-wide entity; and (4) for all non-PRC exporters of subject merchandise which have not received their own rate, the cash deposit rate will be the rate applicable to the PRC exporter that supplied that non-PRC exporter. These deposit requirements, when imposed, shall remain in effect until further notice.

Notification to Importers

This notice also serves as a preliminary reminder to importers of their responsibility under 19 CFR 351.402(f)(2) to file a certificate regarding the reimbursement of antidumping duties prior to liquidation of the relevant entries during the POR. Failure to comply with this requirement could result in the Department's presumption that reimbursement of antidumping duties occurred and the subsequent assessment of double antidumping duties.

These preliminary results are being issued and published in accordance with sections 751(a)(1) and 777(i)(1) of the Act and 19 CFR 351.221(b)(4).

Dated: March 2, 2016.

Paul Piquado,

Assistant Secretary for Enforcement and Compliance.

Appendix I

List of Topics Discussed in the Preliminary Decision Memorandum:

1. Summary
2. Case History
3. Scope of the Order
4. Discussion of the Methodology
   a. Non-Market Economy Status
   b. Companies that Did Not Establish Their Eligibility for a Separate Rate
   c. Preliminary Determination of No Shipments
5. Recommendation

[22] *Id.*

[FR Doc. 2016–05404 Filed 3–9–16; 8:45 am]

BILLING CODE 3510–DS–P

DEPARTMENT OF COMMERCE

International Trade Administration

[A–475–818]

Certain Pasta From Italy: Amended Final Results of Antidumping Duty Administrative Review; 2013–2014

AGENCY: Enforcement and Compliance, International Trade Administration, Department of Commerce.

SUMMARY: The Department of Commerce (the Department) is amending the *Final Results*[1] of the antidumping duty administrative review of certain pasta (pasta) from Italy to correct a ministerial error. The period of review (POR) is July 1, 2013, through June 30, 2014.

DATES: Effective March 10, 2016.

FOR FURTHER INFORMATION CONTACT: Joy Zhang, AD/CVD Operations, Office III, Enforcement and Compliance, International Trade Administration, U.S. Department of Commerce, 14th Street and Constitution Avenue NW., Washington, DC 20230; telephone: (202) 482–1168.

SUPPLEMENTARY INFORMATION:

Background

On February 10, 2016, the Department disclosed to interested parties its calculations for the *Final Results.*[2] On February 17, 2016, the Department received a timely filed ministerial error allegation from La Molisana, S.p.A. (La Molisana) regarding the Department's final margin calculation.[3]

Period of Review

The POR covered by this review is July 1, 2013, through June 30, 2014.

Scope of the Order

Imports covered by the order are shipments of certain non-egg dry pasta. The merchandise subject to review is currently classifiable under items 1901.90.90.95 and 1902.19.20 of the Harmonized Tariff Schedule of the United States (HTSUS). Although the HTSUS subheadings are provided for convenience and customs purposes, the written description of the merchandise subject to the order is dispositive.[4]

Ministerial Errors

Section 751(b) of the Tariff Act of 1930, as amended (''the Act''), and 19 CFR 351.224(f) defines a ministerial error as an error ''in addition, subtraction, or other arithmetic function, clerical errors resulting from inaccurate copying, duplication, or the like, and any other type of unintentional error which {the Department} considers ministerial.'' We analyzed La Molisana's ministerial error comments and determined, in accordance with section 751(h) of the Act and 19 CFR 351.224(e), that there was a ministerial error in our margin calculation for La Molisana for the *Final Results.* For a complete discussion of the alleged error, *see* the Department's Ministerial Error Memorandum.[5]

In accordance with section 751(h) of the Act and 19 CFR 351.224(e), we are amending the *Final Results.* Specifically, we are amending the weighted-average dumping margin for La Molisana as well as for the companies that were not selected for individual examination, who were assigned the rate determined for La Molisana.[6] The revised weighted-average dumping margins for the affected companies are detailed below.

Amended Final Results

As a result of correcting for the ministerial error, we determined the following amended weighted-average dumping margins[7] for the period July 1, 2013, through June 30, 2014:

[1] *See Certain Pasta From Italy: Final Results of Antidumping Duty Administrative Review; 2013–2014,* 81 FR 8043 (February 17, 2016) (*Final Results*).

[2] *See* Memorandum to Eric Greynolds, Program Manager, AD/CVD Operations, Office III from Joy Zhang, Case Analyst, ''2013–2014 Antidumping Duty Administrative Review of Certain Pasta from Italy—Final Results, Sales Analysis Memorandum for La Molisana,'' dated February 10, 2016 (Final Results Calculations).

[3] *See* Letter from La Molisana, ''Certain Pasta From Italy: A–475–818; Request for Correction of Clerical Error Pursuant to 17 CFR Section 351.224(f),'' dated February 16, 2016.

[4] For a full description of the scope of the order, *see* the ''Issues and Decision Memorandum for the Final Results of Antidumping Duty Administrative Review and Partial Rescission: Certain Pasta from Italy; 2013–2014'' from Christian Marsh, Deputy Assistant Secretary for Antidumping and Countervailing Duty Operations, to Paul Piquado, Assistant Secretary for Enforcement and Compliance, dated February 9, 2016 (Issues and Decision Memorandum) and incorporated herein by reference.

[5] *See* ''Amended Final Results of the 2013–2014 Administrative Review of the Antidumping Duty Order on Certain Pasta from Italy: Allegation of Ministerial Error,'' dated concurrently with this notice (''Ministerial Error Memorandum'').

[6] *See Final Results,* 80 FR at 61362.

[7] The margin for the non-examined companies was based on the calculated weighted-average

Producer and/or exporter	Weighted-average dumping margin (percent)
La Molisana S.p.A	6.43
Rummo S.p.A., Lenta Lavorazione, Pasta Castiglioni, and Rummo S.p.A. Molino e Pastificio (collectively, the Rummo Group)	0.00
Pastificio Andalini S.p.A.	6.43
Delverde Industrie Alimentari S.p.A	6.43

Duty Assessment/Case Deposits

The Department intends to issue assessment instructions to CBP 15 days after the date of publication of these amended final results to liquidate shipments of subject merchandise produced and/or exported by respondents listed above entered, or withdrawn form warehouse, for consumption on or after July 1, 2013, through June 30, 2014.

Pursuant to section 751(a)(2)(C) of the Act, the Department also intends to instruct CBP to collect cash deposits of estimated dumping duties, in the amounts shown above for each of the respective companies shown above, on shipments of subject merchandise entered, or withdrawn from warehouse, for consumption on or after February 17, 2016, the date of publication of the *Final Results.* For all non-reviewed firms, we will instruct CBP to continue to collect cash deposits at the most-recent company-specific or all-others rate applicable to the company, as appropriate. These cash deposit requirements, when imposed, shall remain in effect until further notice.

Administrative Protective Order

This notice also serves as a reminder to parties subject to administrative protective orders (''APO'') of their responsibility concerning the return or destruction of proprietary information disclosed under APO in accordance with 19 CFR 351.305(a)(3), which continues to govern business proprietary information in this segment of the proceeding. Timely written notification of the return/destruction of APO materials, or conversion to judicial protective order, is hereby requested. Failure to comply with the regulations and the terms of an APO is a sanctionable violation.

margin of La Molisana (the sole mandatory respondent receiving an above *de minimis* margin in these final results).

Disclosure

We will disclose the calculations performed for these amended final results to interested parties within five business days of the date of the publication of this notice in accordance with 19 CFR 351.224(b).

We are issuing and publishing this notice in accordance with sections 751(h) and 777(i)(1) of the Act and 19 CFR 351.224(e).

Dated: March 4, 2016.

Paul Piquado,

Assistant Secretary for Enforcement and Compliance.

[FR Doc. 2016–05407 Filed 3–9–16; 8:45 am]

BILLING CODE 3510–DS–P

DEPARTMENT OF COMMERCE

International Trade Administration

[C–489–817]

Oil Country Tubular Goods From Turkey: Notice of Court Decision Not in Harmony With the Final Determination of the Countervailing Duty Investigation

AGENCY: Enforcement and Compliance, International Trade Administration, Department of Commerce.

SUMMARY: On February 22, 2016, the United States Court of International Trade (CIT) sustained [1] the Department of Commerce's (the Department) final results of a redetermination [2] issued pursuant to the CIT's remand orders in *Borusan Mannesmann Boru Sanayi Ve Ticaret A.S. and Borusan Istikbal Ticaret* v. *United States,* 61 F. Supp. 3d 1306 (CIT April 22, 2015) *(Borusan)* and *Maverick Tube Corporation* v. *United States,* Consol. Court No. 14–00229, Slip Op. 15–59 (CIT June 15, 2015) (*Maverick*) [3], with respect to the Department's *Final Determination* of the countervailing duty (CVD) investigation of oil country tubular goods from Turkey.[4] Consistent with the decision of the United States Court of Appeals for the Federal Circuit (CAFC) in *Timken Co.* v. *United States,* 893 F.2d 337 (Fed. Cir. 1990) (*Timken*), as clarified by *Diamond Sawblades Mfrs. Coalition* v. *United States,* 626 F.3d 1374 (Fed. Cir. 2010) (*Diamond Sawblades*), the Department is notifying the public that the Court's final judgment in this case is not in harmony with the *Final Determination,* and that the Department is amending the *Final Determination* with respect to Borusan Mannesmann Boru Sanayi ve Ticaret A.S. (Borusan), Toscelik Profil ve Sac Endustrisi A.S. (Toscelik), and the ''all others'' rate.

DATES: *Effective Date:* March 3, 2016.

FOR FURTHER INFORMATION CONTACT: Peter Zukowski or Nicholas Czajkowski, AD/CVD Operations, Office I, Enforcement and Compliance, International Trade Administration, U.S. Department of Commerce, 1401 Constitution Avenue NW., Washington, DC, 20230; telephone (202) 482–0189 or (202) 482–1395, respectively.

SUPPLEMENTARY INFORMATION:

Background

In *Borusan,* the CIT remanded for further consideration the Department's finding of distortion in the Turkish hot-rolled steel (HRS) market, the Department's selection of a HRS benchmark, and the Department's application of facts available with adverse inferences with respect to purchases of HRS by the respondent Borusan. In *Maverick,* the CIT remanded issues pertaining to the Department's HRS benchmark calculations as well and, in addition, the Department's benchmark valuation for a parcel of land that the Government of Turkey (GOT) granted to the respondent Toscelik in 2008 for less than adequate remuneration (LTAR).

On August 31, 2015, the Department issued its *Remand Redetermination.* In its *Remand Redetermination,* the Department, under protest, conducted a new HRS market analysis consistent with the Court's remand order, determined that under that specific analysis the HRS market was not distorted in Turkey, and pursuant to section 19 CFR 351.511(a)(2)(ii), determined to use transaction prices in Turkey as a benchmark to calculate the benefit from the provision of HRS to Borusan and Toscelik during the period of investigation.[5] In addition, the Department revised the benchmark valuation to calculate the benefit

[1] *See Maverick Tube Corporation* v. *United States,* CIT Consol. Court No. 14–00229, Slip Op. 16–16 (February 22, 2016).

[2] *See Final Results of Remand Redetermination,* Court No. 14–00229, dated August 31, 2015, available at: *http://ia.ita.doc.gov/remands/* (*Remand Redetermination*).

[3] On June 22, 2015, the CIT granted a motion to consolidate Court No. 14–00214 into Consolidated Court No. 14–00229.

[4] *See Certain Oil Country Tubular Goods From the Republic of Turkey: Final Affirmative Countervailing Duty Determination and Final Affirmative Critical Circumstances Determination,* 79 FR 41964 (July 18, 2014) (*Final Determination*). The Department issued a countervailing duty order in this proceeding on September 10, 2014. *See Certain Oil Country Tubular Goods From India and the Republic of Turkey: Countervailing Duty Orders and Amended Affirmative Final Countervailing Duty Determination for India,* 79 FR 53688 (September 10, 2014) (*Order*).

[5] *Remand Redetermination* at 18.

Toscelik received from the provision of the land parcel for LTAR.[6] The resulting calculations have changed the countervailing duty rates calculated for Borusan, Toscelik, and the all others rate.

As explained above, on February 22, 2016, the CIT affirmed the Department's *Remand Redetermination*.

Timken Notice

In its decision in *Timken,* as clarified by *Diamond Sawblades,* the CAFC held that, pursuant to section 516A(e) of the Tariff Act of 1930, as amended (the Act), the Department must publish a notice of a court decision that is not ''in harmony'' with a Department determination and must suspend liquidation of entries pending a ''conclusive'' court decision. The CIT's February 22, 2016, final judgment affirming the *Remand Redetermination* constitutes a final decision of that court which is not in harmony with the *Final Determination.* This notice is published in fulfillment of the publication requirements of *Timken.* Accordingly, the Department will continue suspension of liquidation of the subject merchandise pending expiration of the period of appeal or, if appealed, pending a final and conclusive court decision.

Amended Final Determination

Because there is now a final court decision with respect to the *Final Determination,* the Department amends its *Final Determination.* The Department finds that the following revised net countervailable subsidy rates exist:

Producer/exporter	Net subsidy rate (percent)
Borusan Istikbal Ticaret, Borusan Mannesmann Boru Sanayi, Borusan Mannesmann Boru Yatirim Holding A.S., and Borusan Holding A.S	2.39
Tosyali Dis Ticaret A.S, Tosçelik Profil ve Sac Endustrisi A.S., Tosyali Elektrik Enerjisi Toptan Satis Ith. Ihr. A.S., Tosyali Demir Celik San. A.S., and Tosyali Holding A.S	* 0.95
All Others	2.39

* De minimis.

Because the revised countervailable subsidy rate for Toscelik is *de minimis,* there is now a negative countervailing duty determination for Toscelik. Accordingly, the Department will instruct United States Customs and Border Protection (CBP) to continue suspension of liquidation of Toscelik's subject merchandise, but set the cash deposit rate for Toscelik to zero pending a final and conclusive court decision.

For Borusan, the Department will instruct CBP to set the cash deposit rate to the rate listed above, again, pending a final and conclusive court decision.

In the *Final Determination,* in accordance with section 705(c)(5)(A) of the Act, for companies not individually investigated, we applied an ''all-others'' rate of 9.21 percent. This rate was calculated as the average of the rates determined for Borusan and Toscelik (15.89 and 2.53, respectively).[7] As noted above, Toscelik's amended countervailable subsidy rate is *de minimis.* Section 705(c)(5)(i) of the Act stipulates that the ''all-others'' rate should exclude zero and *de minimis* rates calculated for the companies individually investigated. Therefore, for purposes of this amended *Final Determination,* the Department will instruct CBP that the ''all-others'' cash deposit rate is to be amended to Borusan's revised calculated subsidy rate, 2.39 percent.

This notice is issued and published in accordance with sections 516A(e)(1), 705(c)(1)(B), and 777(i)(1) of the Act.

Dated: March 4, 2016.

Paul Piquado,

Assistant Secretary for Enforcement and Compliance.

[FR Doc. 2016–05408 Filed 3–9–16; 8:45 am]

BILLING CODE 3510–DS–P

DEPARTMENT OF COMMERCE

International Trade Administration

[A–570–851]

Certain Preserved Mushrooms From the People's Republic of China: Final Results of Antidumping Duty Administrative Review; 2014–2015

AGENCY: Enforcement and Compliance, International Trade Administration, Department of Commerce.

SUMMARY: On November 6, 2015, the Department of Commerce (the Department) published the *Preliminary Results* of the 2014–2015 administrative review of the antidumping duty order on Certain Preserved Mushrooms from the People's Republic of China.[1] The period of review (POR) is February 1, 2014, through January 31, 2015. This review covers one mandatory respondent, Linyi City Kangfa Foodstuff Drinkable Co., Ltd. (Kangfa). In the *Preliminary Results,* we determined that Kangfa is not eligible for a separate rate and, therefore is part of the PRC-wide entity. The Department invited interested parties to comment on the *Preliminary Results.* No parties commented. Accordingly, our final results remain unchanged from the *Preliminary Results.*

DATES: *Effective Date:* March 10, 2016.

FOR FURTHER INFORMATION CONTACT: Michael J. Heaney or Robert James, AD/CVD Operations, Office VI, Enforcement and Compliance, International Trade Administration, U.S. Department of Commerce, 14th Street and Constitution Avenue NW., Washington, DC 20230; telephone (202) 482–4475 or (202) 482–0649, respectively.

SUPPLEMENTARY INFORMATION:

Background

On November 6, 2015, the Department published the *Preliminary Results.* We invited interested parties to comment on the *Preliminary Results,* but no comments were received. Also, as explained in the memorandum from the Acting Assistant Secretary for Enforcement & Compliance, the Department has exercised its authority to toll all administrative deadlines due to the recent closure of the Federal Government. All deadlines in this segment of the proceeding have been extended by four business days. The revised deadline for the final results is now March 11, 2016.[2]

[6] *Id.* at 28.

[7] *See Final Determination,* 79 FR at 41965.

[1] *See Certain Preserved Mushrooms from the People's Republic of China: Preliminary Results of Antidumping Duty Administrative Review, and Rescission in Part,* 80 FR 68836 (November 6, 2015) (*Preliminary Results*), and the accompanying Decision Memorandum (Preliminary Decision Memorandum).

[2] *See* Memorandum to the File from Ron Lorentzen, Acting A/S for Enforcement &

Scope of the Order

The products covered by this order are certain preserved mushrooms, whether imported whole, sliced, diced, or as stems and pieces. The certain preserved mushrooms covered under this order are the species *Agaricus bisporus* and *Agaricus bitorquis.* ''Certain Preserved Mushrooms'' refers to mushrooms that have been prepared or preserved by cleaning, blanching, and sometimes slicing or cutting. These mushrooms are then packed and heated in containers including, but not limited to, cans or glass jars in a suitable liquid medium, including, but not limited to, water, brine, butter or butter sauce. Certain preserved mushrooms may be imported whole, sliced, diced, or as stems and pieces. Included within the scope of this order are ''brined'' mushrooms, which are presalted and packed in a heavy salt solution to provisionally preserve them for further processing.[3]

Excluded from the scope of this order are the following: (1) All other species of mushroom, including straw mushrooms; (2) all fresh and chilled mushrooms, including ''refrigerated'' or ''quick blanched mushrooms;'' (3) dried mushrooms; (4) frozen mushrooms; and (5) ''marinated,'' ''acidified,'' or ''pickled'' mushrooms, which are prepared or preserved by means of vinegar or acetic acid, but may contain oil or other additives.

The merchandise subject to this order is classifiable under subheadings: 2003.10.0127, 2003.10.0131, 2003.10.0137, 2003.10.0143, 2003.10.0147, 2003.10.0153, and 0711.51.0000 of the Harmonized Tariff Schedule of the United States (HTSUS). Although the HTSUS subheadings are provided for convenience and Customs purposes, the written description of the scope of this order is dispositive.

Final Determination of No Shipments

In the *Preliminary Results,* we preliminarily determined that (1) the exporter/producer combination of Dezhou Kaihang Agricultural Science Technology Co., Ltd. (Dezhou Kaihang)/Fujian Haishan Foods Co., Ltd. (Fengyu); (2) the exporter/producer combination of Fujian Haishan Foods Co., Ltd. (Fujian Haishan)/Zhangzhou Hongda Import & Export Trading Co., Ltd. (Hongda); (3) Guangxi Jisheng Foods, Inc. (Guangxi Jisheng), (4) Xiamen International Trade & Industrial Co., Ltd. (XITIC); and (5) Zhangzhou Gangchang Canned Foods Co., Ltd. (Gangchang) did not have any reviewable entries during the POR. In particular, we found that (1) Dezhou Kaihang/Fengyu, (2) Fujian Haishan/Hongda, (3) Guangxi Jisheng, (4) XITIC and (5) Gangchang all submitted timely certifications of no shipments, entries, or sales of subject merchandise during the POR and we did not receive any information from U.S. Customs and Border Protection (CBP) indicating there were reviewable entries for those companies during the POR.

Consistent with the Department's assessment practice in non-market economy cases, we stated in the *Preliminary Results* that the Department would not rescind the review in these circumstances but, rather, would complete the review with respect to Dezhou Kaihang/Fengyu, Fujian Haishan/Hongda, Guangxi Jisheng, XITIC, and Gangchang and issue appropriate instructions to CBP based on the final results of the review.[4] We did not receive any comments following our *Preliminary Results* with respect to this issue. As such, in these final results, we continue to determine that Dezhou Kaihang/Fengyu, Fujian Haishan/Hongda, Guangxi Jisheng, XITIC, and Gangchang had no reviewable entries of subject merchandise during the POR.

Final Results of Review

In our *Preliminary Results,* we found that mandatory respondent Kangfa failed to establish its eligibility for a separate rate and preliminarily determined to treat Kangfa as part of the PRC-wide entity.[5] We also found that the remaining 51 exporters subject to this review did not establish their eligibility for separate rate status and that they were, thus, part of the PRC-wide entity.

No parties commented on these *Preliminary Results.* Therefore, in these final results, we continue to determine that all 51 of these exporters are part of the PRC-wide entity. Each of these entities are listed in the attached Appendix. Because no party requested a review of the PRC-wide entity and the Department no longer considers the PRC-wide entity as an exporter conditionally subject to administrative reviews, we did not conduct a review of the PRC-wide entity, and the entity's rate is not subject to change in this review.[6]

Assessment Rates

Pursuant to section 751(a)(2)(C) of the Tariff Act of 1930, as amended (the Act) and 19 CFR 351.212(b), the Department has determined, and CBP shall assess, antidumping duties on all appropriate entries of subject merchandise covered by this review. The Department intends to issue assessment instructions to CBP 15 days after the date of publication of these final results of review. The Department intends to instruct CBP to liquidate entries of subject merchandise from the exporters identified above as being part of the PRC-wide entity (including Kangfa) at the PRC-wide rate, *i.e.,* 308.33 percent.

Pursuant to a refinement in the Department's practice, if the Department determines that an exporter had no shipments of the subject merchandise, any suspended entries that entered under that exporter's case number (*i.e.,* at that exporter's rate) will be liquidated at the PRC-wide rate.[7] As noted above, the Department determines that Dezhou Kaihang/Fengyu, Fujian Haishan/Hongda, Guangxi Jisheng, XITIC, and Gangchang did not have any reviewable transactions during the POR. As a result, any suspended entries that entered under these exporters' case numbers will be liquidated at the PRC-wide rate.

Cash Deposit Requirements

The following cash deposit requirements will be effective for all shipments of subject merchandise entered, or withdrawn from warehouse, for consumption on or after the publication date of the final results of this administrative review, as provided by section 751(a)(2)(C) of the Act: (1) For previously investigated or reviewed PRC and non-PRC exporters which are not under review in this segment of the proceeding but received a separate rate in a previous segment, the cash deposit rate will continue to be the exporter-specific rate published for the most recently-completed period; (2) for all PRC exporters of subject merchandise

Compliance, ''Tolling of Administrative Deadlines As a Result of the Government Closure During Sniwstorm Jonas'' dated January 27, 2016.

[3] On June 19, 2000, the Department affirmed that ''marinated,'' ''acidified,'' or ''pickled'' mushrooms containing less than 0.5 percent acetic acid are within the scope of the antidumping duty order. *See* Recommendation Memorandum-Final Ruling of Request by Tak Fat, *et al.* for Exclusion of Certain Marinated, Acidified Mushrooms from the Scope of the Antidumping Duty Order on Certain Preserved Mushrooms from the People's Republic of China,'' dated June 19, 2000. On February 9, 2005, the United States Court of Appeals for the Federal Circuit upheld this decision. *See Tak Fat* v. *United States,* 396 F.3d 1378 (Fed. Cir. 2005).

[4] *See Preliminary Results,* 80 FR at 68837.

[5] *See id.* at 68838.

[6] *See Antidumping Proceedings: Announcement of Change in Department Practice for Respondent Selection in Antidumping Duty Proceedings and Conditional Review of the Nonmarket Economy Entity in NME Antidumping Duty Proceedings,* 78 FR 65963 (November 4, 2013).

[7] *See Non-Market Economy Antidumping Proceedings: Assessment of Antidumping Duties,* 76 FR 65694 (October 24, 2011).

which have not been found to be entitled to a separate rate, the cash deposit rate will be that for the PRC-wide entity (*i.e.,* 308.33 percent); and (3) for all non-PRC exporters of subject merchandise which have not received their own rate, the cash deposit rate will be the rate applicable to the PRC exporter(s) that supplied the non-PRC exporter. These cash deposit requirements, when imposed, shall remain in effect until further notice.

Notification to Importers

This notice serves as a final reminder to importers of their responsibility under 19 CFR 351.402(f)(2) to file a certificate regarding the reimbursement of antidumping duties prior to liquidation of the relevant entries during this POR. Failure to comply with this requirement could result in the Department's presumption that reimbursement of antidumping duties occurred and the subsequent assessment of double antidumping duties.

Notification Regarding Administrative Protective Order

This notice also serves as a final reminder to parties subject to administrative protective order (APO) of their responsibility concerning the return or destruction of proprietary information disclosed under APO in accordance with 19 CFR 351.305(a)(3), which continues to govern business proprietary information in this segment of the proceeding. Timely written notification of the return or destruction of APO materials, or conversion to judicial protective order, is hereby requested. Failure to comply with the regulations and terms of an APO is a sanctionable violation.

We are issuing and publishing these results and this notice in accordance with sections 751(a)(1) and 777(i) of the Act.

Dated: March 4, 2016.

Paul Piquado,

Assistant Secretary for Enforcement and Compliance.

Appendix

Companies Included in the PRC Wide Entity

The PRC Entity includes the following 51 entities: (1) Agrogentra & Co., Ltd., (2) Ayecue (Liaocheng) Foodstuff Co., Ltd, (3) Blue Field (Sichuan) Food Industrial Co., Ltd., (4) Casia Global Logistics Co., Ltd., (5) Changzhou Chen Rong- Da Carpet Co., Ltd., (6) China National Cereals, Oils & Foodstuffs Import & Export Corp., (7) China Processed Food Import & Export Co., (8) DHL ISC (Hong Kong) Limited, (9) Dujiangyan Xingda Foodstuff Co., Ltd., (10) Fujian Blue Lake Foods Co., Ltd., (11) Fujian Golden Banyan Foodstuffs Industrial Co., Ltd., (12) Fujian Pinghe Baofeng Canned Foods, (13) Fujian Yuxing Fruits and Vegetables Foodstuffs Development Co., Ltd., (14) Fujian Zishan Group Co., Ltd., (15) Guangxi Eastwing Trading Co., Ltd., (16) Guangxi Hengyang Industrial & Commercial Dev., Ltd., (17) Guangxi Hengyong Industrial & Commercial Dev. Ltd., (18) Inter-Foods (Dongshan) Co., Ltd., (19) Jiangxi Cereal Oils Foodstuffs, (20) Joy Foods (Zhangzhou) Co., Ltd., (21) Kangfa, (22) Longhai Guangfa Food Co., Ltd., (23) Primera Harvest (Xiangfan) Co., Ltd., (24) Shandong Jiufa Edible Fungus Corporation, Ltd., (25) Shandong Xinfa Agricultural Science Corporation Ltd., (26) Shandong Yinfeng Rare Fungus Corporation, Ltd., (27) Shenzhen Syntrans International Logistics Co., Ltd., (28) Sun Wave Trading Co., Ltd., (29) Sunrise Food Industry & Commerce, (30) Shouguang Sunrise Industry & Commerce Co., Ltd., (31) Thuy Duong Transport And Trading Service JSC, (32) Tianjin Fulida Supply Co., Ltd., (33) Xiamen Aukking Imp. & Exp. Co., Ltd., (34) Xiamen Carre Food Co., Ltd., (35) Xiamen Choice Harvest Imp., (36) Xiamen Greenland Import & Export Co., Ltd., (37) Xiamen Gulong Import & Export Co., Ltd., (38) Xiamen Huamin Imp. & Exp. Co., Ltd., (39) Xiamen Jiahua Import & Export Trading Co., Ltd., (40) Xiamen Longhuai Import & Export Co., Ltd., (41) Xiamen Longhuai Imp. & Exp. Co., Ltd., (42) Xiamen Longstar Lighting Co., Ltd., (43) Xiamen Sungiven Import & Export Co., Ltd., (44) Zhangzhou Golden Banyan Foodstuffs Industrial Co., Ltd., (45) Zhangzhou Long Mountain Foods Co., Ltd., (46) Zhangzhou Longhai Minhui Industry & Trade Co., Ltd., (47) Zhangzhou Tan Co., Ltd., (48) Zhangzhou Tongfa Foods Industry Co., Ltd., (49) Zhangzhou Yuxing Imp. & Exp. Trading Co., Ltd., (50) Zhejiang Iceman Food Co., Ltd., and (51) Zhejiang Iceman Group Co., Ltd.

[FR Doc. 2016–05409 Filed 3–9–16; 8:45 am]

BILLING CODE 3510–DS–P

DEPARTMENT OF COMMERCE

International Trade Administration

Renewable Energy Trade Mission to Mexico; May 16–19, 2016

AGENCY: International Trade Administration, Department of Commerce.

ACTION: Notice.

SUMMARY: The United States Department of Commerce, International Trade Administration, is amending the Notice published at 80 FR 76658 (December 10, 2015), regarding the executive-led Renewable Energy Trade Mission to Mexico, scheduled for May 16–19, 2016, to extend the date of the application deadline from March 4, 2016 to the new deadline of March 17, 2016. Applications received after March 17, 2016, will be considered only if space and scheduling constrains permit and participation fees must be paid by March 31, 2016.

SUPPLEMENTARY INFORMATION: Amendments to Revise the Dates.

Background

Due to the recent personnel changes, applications for this Mission will now be accepted through March 17, 2016 (and after that date if space remains and scheduling constraints permit). Interested U.S. companies and trade associations/organizations providing renewable energy equipment, technology, and services which have not already submitted an application are encouraged to do so.

The U.S. Department of Commerce will review applications and make selection decisions on a staggered basis. The applicants selected will be notified as soon as possible.

Contact Information

Ethel M. Azueta Glen, International Trade Specialist, Trade Missions, U.S. Department of Commerce, Washington, DC 20230, Tel: 202–482–5388, Fax: 202–482–9000, *Ethel.Glen@trade.gov.*

Frank Spector,

Director, Trade Missions Program.

[FR Doc. 2016–05411 Filed 3–9–16; 8:45 am]

BILLING CODE 3510–DR–P

DEPARTMENT OF COMMERCE

International Trade Administration

[A–533–810]

Stainless Steel Bar From India: Preliminary Results of Antidumping Duty Administrative Review; 2014–2015

AGENCY: Enforcement and Compliance, International Trade Administration, Department of Commerce.

SUMMARY: The Department of Commerce (the Department) is conducting an administrative review of the antidumping duty order on stainless steel bar (SSB) from India.[1] The period of review (POR) is February 1, 2014, through January 31, 2015. This review covers two producers or exporters of the subject merchandise: Ambica Steels Limited (Ambica), and Bhansali Bright Bars Pvt. Ltd. (Bhansali). We preliminarily find that Ambica and Bhansali have not made sales of the subject merchandise at prices below normal value. Interested parties are invited to comment on these preliminary results.

DATES: *Effective Date:* March 10, 2016.

[1] *See Initiation of Antidumping and Countervailing Duty Administrative Reviews,* 80 FR 18202 (April 3, 2015).

FOR FURTHER INFORMATION CONTACT: Jennifer Shore, or Joseph Shuler, AD/CVD Operations, Office I, Enforcement and Compliance, International Trade Administration, U.S. Department of Commerce, 1401 Constitution Avenue NW, Washington DC 20230; telephone (202) 482–2778, or (202) 482–1293, respectively.

Scope of the Order

The merchandise subject to the order is SSB from India. The SSB subject to the order is currently classifiable under subheadings 7222.10.00, 7222.11.00, 7222.19.00, 7222.20.00, 7222.30.00 of the Harmonized Tariff Schedule of the United States (HTSUS). The HTSUS subheadings are provided for convenience and customs purposes. The written description is dispositive.[2]

Methodology

The Department is conducting this review in accordance with section 751(a)(1)(B) and (2) of the Tariff Act of 1930, as amended (the Act). Normal value is calculated in accordance with section 773 of the Act.

For a full description of the methodology underlying our conclusions, *see* the Preliminary Decision Memorandum. A list of topics discussed in the Preliminary Decision Memorandum is provided as Appendix I to this Notice. The Preliminary Decision Memorandum is a public document and is on file electronically *via* Enforcement and Compliance's Antidumping and Countervailing Duty Centralized Electronic Service System (ACCESS). ACCESS is available to registered users at *http://access.trade.gov,* and is available to all parties in the Central Records Unit, room B8024 of the main Department of Commerce building. In addition, a complete version of the Preliminary Decision Memorandum can be accessed directly at *http://enforcement.trade.gov/frn/.* The signed Preliminary Decision Memorandum and the electronic versions of the Preliminary Decision Memorandum are identical in content.

[2] A full description of the scope of the order is contained in the memorandum to Paul Piquado, Assistant Secretary for Enforcement and Compliance, from Christian Marsh, Deputy Assistant Secretary for Antidumping and Countervailing Duty Operations, ''Decision Memorandum for Preliminary Results of Antidumping Duty Administrative Review: Stainless Steel Bar from India; 2014–2015'' (Preliminary Decision Memorandum), dated concurrently with these results and hereby adopted by this notice.

Preliminary Results of the Review [3]

As a result of this review, we preliminarily determine that the following weighted-average dumping margins exist for the respondents for the period February 1, 2014, through January 30, 2015.

Producer or exporter	Weighted-average dumping margin (percent)
Ambica Steels Limited ..	0.00
Bhansali Bright Bars Private Limited	0.00

Disclosure and Public Comment

The Department intends to disclose to interested parties the calculations performed in connection with these preliminary results within five days of the date of publication of this notice.[4] Interested parties may submit case briefs no later than 30 days after the date of publication of the preliminary results.[5] Rebuttal briefs, limited to the issues raised in the case briefs, may be filed no later than five days after the submission of case briefs.[6] Parties who submit case briefs or rebuttal briefs in this proceeding are encouraged to submit with each argument: (1) A statement of the issue; (2) a brief summary of the argument; and (3) a table of authorities.[7] All case and rebuttal briefs must be filed electronically using ACCESS, and must also be served on interested parties.[8] An electronically filed document must be received successfully in its entirety by the Department's electronic records system, ACCESS, by 5:00 p.m. Eastern Time on the date that the document is due. Executive summaries should be limited to five pages total, including footnotes.

Interested parties who wish to request a hearing must submit a written request to the Assistant Secretary for Enforcement and Compliance, U.S. Department of Commerce, using Enforcement and Compliance's ACCESS system within 30 days of publication of this notice.[9] Hearing requests should contain the party's name, address, and telephone number, the number of participants, and a list of the issues to be discussed. If a request for a hearing is made, we will inform parties of the scheduled date for the hearing which will be held at the U.S. Department of Commerce, 1401 Constitution Avenue NW., Washington, DC 20230, at a time and location to be determined. Parties should confirm by telephone the date, time, and location of the hearing.

Unless the deadline is extended pursuant to section 751(a)(2)(B)(iv) of the Act and 19 CFR 351.213(h)(2), the Department intends to issue the final results of this administrative review, including the results of our analysis of the issues raised by the parties in their case and rebuttal briefs, within 120 days after the publication of these preliminary results, pursuant to section 751(a)(3)(A) of the Act and 19 CFR 351.213(h)(1).

Assessment Rates

For Ambica and Bhansali, upon issuance of the final results, the Department shall determine, and U.S. Customs and Border Protection (CBP) shall assess, antidumping duties on all appropriate entries covered by this review. If Ambica's and Bhansali's weighted-average dumping margins are not zero or *de minimis* (*i.e.,* less than 0.50 percent) in the final results of this review, we will calculate importer-specific assessment rates on the basis of the ratio of the total amount of dumping calculated for each importer's examined sales and the total entered value of those sales in accordance with 19 CFR 351.212(b)(1). Where Ambica and Bhansali did not report entered value, we will calculate importer specific assessment rates for the merchandise in question by aggregating the dumping margins calculated for all U.S. sales to each importer and dividing this amount by the total quantity of those sales.

We will instruct CBP to assess antidumping duties on all appropriate entries covered by this review when the importer-specific assessment rate calculated in the final results of this review is not zero or *de minimis.* Where either the respondent's weighted-average dumping margin is zero or *de minimis,*[10] or an importer-specific assessment rate is zero or *de minimis,* we will instruct CBP to liquidate the

[3] The Department exercised its discretion to toll all administrative deadlines due to a closure of the Federal Government. *See* Memorandum to the Record from Ron Lorentzen, Acting A/S for Enforcement & Compliance, regarding ''Tolling of Administrative Deadlines As a Result of the Government Closure During Snowstorm Jonas,'' dated January 27, 2016. All deadlines in this segment of the proceeding have been extended by four business days. The revised deadline for the preliminary results of this administrative review is now March 4, 2016.

[4] *See* 19 CFR 351.224(b).

[5] *See* 19 CFR 351.309(c)(1)(ii); *see also* 19 CFR 351.303 (for general filing requirements).

[6] *See* 19 CFR 351.309(d)(1).

[7] *See* 19 CFR 351.309(c)(2) and (d)(2).

[8] *See* 19 CFR 351.303(f).

[9] *See* 19 CFR 351.310(c).

[10] *See Antidumping Proceedings: Calculation of the Weighted-Average Dumping Margin and Assessment Rate in Certain Antidumping Duty Proceedings; Final Modification,* 77 FR 8101 (February 14, 2012).

appropriate entries without regard to antidumping duties.

We intend to issue instructions to CBP 15 days after publication of the final results of this review.

Cash Deposit Requirements

The following cash deposit requirements will be effective for all shipments of the subject merchandise entered, or withdrawn from warehouse, for consumption on or after the publication date of the final results of this administrative review, as provided by section 751(a)(2)(C) of the Act: (1) The cash deposit rate for Bhansali and Ambica will be the rate established in the final results of this review, except if the rate is *de minimis* within the meaning of 19 CFR 351.106(c)(1) (*i.e.,* less than 0.50 percent), in which case the cash deposit rate will be zero; (2) for previously reviewed or investigated companies not participating in this review, the cash deposit rate will continue to be the company-specific rate published for the most recent period; (3) if the exporter is not a firm covered in this review, a prior review, or the original investigation, but the manufacturer is, the cash deposit rate will be the rate established for the most recent period for the manufacturer of the merchandise; and (4) the cash deposit rate for all other manufacturers or exporters will continue to be 12.45 percent, the all-others rate established in the less-than-fair-value investigation.[11] These requirements, when imposed, shall remain in effect until further notice.

Notification to Importers

This notice serves as a preliminary reminder to importers of their responsibility under 19 CFR 351.402(f)(2) to file a certificate regarding the reimbursement of antidumping duties prior to liquidation of the relevant entries during this review period. Failure to comply with this requirement could result in the Secretary's presumption that reimbursement of antidumping duties occurred and the subsequent assessment of double antidumping duties.

The Department is issuing and publishing these results in accordance with sections 751(a)(1) and 777(i)(1) of the Act.

[11] *See Notice of Final Determination of Sales at Less Than Fair Value: Stainless Steel Bar from India,* 59 FR 66915, 66921 (December 28, 1994).

Dated: March 4, 2016.

Paul Piquado,

Assistant Secretary for Enforcement and Compliance.

Appendix I

List of Topics Discussed in the Preliminary Decision Memorandum

I. Summary
II. Background
III. Scope of Order
IV. Discussion of the Methodology
  1. Determination of Comparison Method
  2. Results of the Differential Pricing Analysis
V. Date of Sale
VI. Product Comparisons
VII. Export Price
VIII. Normal Value
  A. Comparison Market Viability
  B. Affiliated Party Transactions and Arm's Length Test
  C. Level of Trade (LOT)
  D. Cost of Production Analysis
  1. Calculation of Cost of Production (COP)
  2. Test of Comparison Market Sales Prices
  3. Results of the COP Test
  E. Calculation of Normal Value Based on Comparison Market Prices
IX. Currency Conversion
X. Recommendation

[FR Doc. 2016–05449 Filed 3–9–16; 8:45 am]

BILLING CODE 3510–DS–P

DEPARTMENT OF COMMERCE

International Trade Administration

[A–549–822]

Certain Frozen Warmwater Shrimp From Thailand; Preliminary Results of Antidumping Duty Administrative Review, Rescission of Review, in Part, and Preliminary Determination of No Shipments; 2014–2015

AGENCY: Enforcement and Compliance, International Trade Administration, Department of Commerce.

SUMMARY: The Department of Commerce (Department) is conducting an administrative review of the antidumping duty order on certain frozen warmwater shrimp (shrimp) from Thailand. The review covers 163 producers/exporters of the subject merchandise.[1] The Department selected two mandatory respondents for individual examination, Mayao[2] and Thai Union.[3] The period of review (POR) is February 1, 2014, through January 31, 2015. We preliminarily determine that sales to the United States have been made below normal value and, therefore, are subject to antidumping duties. Additionally, we preliminarily determine that certain companies for which we initiated a review did not have any shipments during the POR. If these preliminary results are adopted in the final results of this review, we will instruct U.S. Customs and Border Protection (CBP) to assess antidumping duties on all appropriate entries. We invite interested parties to comment on these preliminary results.

DATES: Effective March 10, 2016.

FOR FURTHER INFORMATION CONTACT: Dennis McClure or Alice Maldonado, AD/CVD Operations, Office II, Enforcement and Compliance, International Trade Administration, U.S. Department of Commerce, 14th Street and Constitution Avenue NW., Washington, DC 20230; telephone: (202) 482–5973 and (202) 482–4682, respectively.

SUPPLEMENTARY INFORMATION: As explained in the memorandum from the Acting Assistant Secretary for Enforcement & Compliance, the Department has exercised its discretion to toll all administrative deadlines due to the recent closure of the Federal Government. All deadlines in this segment of the proceeding have been extended by four business days. The revised deadline for the preliminary results of this review is now March 4, 2016.[4]

Scope of the Order

The merchandise subject to the order is certain frozen warmwater shrimp.[5] The product is currently classified under the following Harmonized Tariff Schedule of the United States (HTSUS) item numbers: 0306.17.00.03, 0306.17.00.06, 0306.17.00.09, 0306.17.00.12, 0306.17.00.15,

[1] *See Certain Frozen Warmwater Shrimp From India and Thailand: Notice of Initiation of Antidumping Duty Administrative Reviews,* 80 FR 16634 (Mar. 30, 2015) (*Initiation Notice*).

[2] Mayao consists of the following companies: A Foods 1991 Co., Limited and May Ao Foods Co., Ltd.

[3] Thai Union consists of the following affiliated companies: Thai Union Frozen Product Co., Ltd., Thai Union Seafood Company Limited, Pakfood Public Company Limited, Asia Pacific (Thailand) Co., Ltd., Chaophraya Cold Storage Co. Ltd., Okeanos Co. Ltd., Okeanos Food Co. Ltd., and Takzin Samut co. Ltd.

[4] *See* Memorandum to the Record from Ron Lorentzen, Acting A/S for Enforcement & Compliance, regarding ''Tolling of Administrative Deadlines As a Result of the Government Closure During Snowstorm Jonas,'' dated January 27, 2016.

[5] For a complete description of the scope of the Order, *see* ''Decision Memorandum for the Preliminary Results of the Administrative Review of the Antidumping Duty Order on Certain Frozen Warmwater Shrimp from Thailand, from Christian Marsh, Deputy Assistant Secretary for Antidumping and Countervailing Duty Operations, to Paul Piquado, Assistant Secretary for Enforcement and Compliance (Preliminary Decision Memorandum), dated concurrently with this notice.

0306.17.00.18, 0306.17.00.21, 0306.17.00.24, 0306.17.00.27, 0306.17.00.40, 1605.21.10.30, and 1605.29.10.10. Although the HTSUS numbers are provided for convenience and for customs purposes, the written product description remains dispositive.

Methodology

The Department is conducting this review in accordance with section 751(a)(2) of the Tariff Act of 1930, as amended (the Act). Export price is calculated in accordance with section 772 of the Act. Normal value is calculated in accordance with section 773 of the Act.

For a full description of the methodology underlying our conclusions, *see* the Preliminary Decision Memorandum. The Preliminary Decision Memorandum is a public document and is on file electronically via Enforcement and Compliance's Antidumping and Countervailing Duty Centralized Electronic Service System (ACCESS). ACCESS is available to registered users at *http://access.trade.gov,* and it is available to all parties in the Central Records Unit, room B8024 of the main Department of Commerce building. In addition, a complete version of the Preliminary Decision Memorandum can be accessed directly at *http://trade.gov/enforcement/frn/index.html.* The signed and the electronic versions of the Preliminary Decision Memorandum are identical in content. A list of the topics discussed in the Preliminary Decision Memorandum is attached as the Appendix to this notice.

Partial Rescission of Review

Pursuant to 19 CFR 351.213(d)(1), the Secretary will rescind an administrative review, in whole or in part, if the parties that requested a review withdraw the request within 90 days of the date of publication of the notice of initiation of the requested review. This review was initiated on March 30, 2015.[6] Two producers/exporters of shrimp in Thailand, Gallant Ocean (Thailand) Co., Ltd. (Gallant Ocean) and Southport Seafood Co., Ltd. (Southport), withdrew their requests for review on May 28, 2015, which is within the 90-day deadline.[7] While no other party requested an administrative review of Southport, we received other requests for review of Gallant Ocean. Therefore, in accordance with 19 CFR 351.213(d)(1), and consistent with our practice, we are rescinding this review only with respect to Southport. We are continuing the administrative review with respect to Gallant Ocean because we received properly-filed requests for a review of this company, and we did not receive timely withdrawal of review requests from all parties with respect to it.

Preliminary Determination of No Shipments

Among the companies under review, four companies properly filed statements reporting that they made no shipments of subject merchandise to the United States during the POR.[8] Based on the certifications submitted by two of these companies and our analysis of CBP information, we preliminarily determine that the following companies had no reviewable transactions during the POR: (1) Gallant Ocean; and (2) Lucky Union Foods Co., Ltd. The Department finds that it is not appropriate to preliminarily rescind the review with respect to these companies but, rather, to complete the review with respect to these companies and issue appropriate instructions to CBP based on the final results of this review.[9]

With respect to the two remaining companies, Marine Gold Products Ltd (Marine Gold)[10] and Thai Union Manufacturing Company Limited (Thai Union Manufacturing), we preliminarily find that there is insufficient evidence on the record of this review to conclude that these companies made no shipments of subject merchandise to the United States during the POR. Therefore, we are continuing to include both Marine Gold and Thai Union Manufacturing in this administrative review for purposes of the preliminary results. However, we requested additional information from CBP with respect to any potential entries made by these companies during the POR, and we will consider this information in making a final determination on this issue for purposes of the final results.

Preliminary Results of the Review

As a result of this review, we preliminarily determine that weighted-average dumping margins exist for the respondents for the period February 1, 2014, through January 31, 2015, as follows:

Producer/exporter	Dumping margin (percent)
A Foods 1991 Co., Limited/May Ao Foods Co., Ltd	1.36
Thai Union Frozen Products Public Co., Ltd/Thai Union Seafood Co., Ltd/Pakfood Public Company Limited/Okeanos Food Co., Ltd/Okeanos Co. Ltd/Asia Pacific (Thailand) Co., Ltd.,/Chaophraya Cold Storage Co. Ltd/Takzin Samut Co. Ltd	0.00

[6] *See Initiation Notice.*

[7] *See* letters from Gallant Ocean and Southport, ''AD Administrative Review of Certain Frozen Warmwater Shrimp from Thailand: Certification of No Shipments and Withdrawal of Request for Administrative Review,'' dated May 28, 2015.

[8] For a full explanation of the Department's analysis, *see* the Preliminary Decision Memorandum.

[9] *See Certain Frozen Warmwater Shrimp From Thailand; Preliminary Results of Antidumping Duty Administrative Review, Partial Rescission of Review, Preliminary Determination of No Shipments;* 2012–2013, 79 FR 15951, 15952 (March 24, 2014), unchanged in *Certain Frozen Warmwater Shrimp From Thailand: Final Results of Antidumping Duty Administrative Review, Final Determination of No Shipments, and Partial Rescission of Review; 2012–2013,* 79 FR 51306 (August 28, 2014).

[10] Shrimp produced and exported by Marine Gold was excluded from the AD Thailand order effective February 1, 2012. *See Certain Frozen Warmwater Shrimp From Thailand: Final Results of Antidumping Duty Administrative Review, Partial Rescission of Review, and Revocation of Order (in Part); 2011–2012,* 78 FR at 42497, 42499 (July 16, 2013) (*2011–2012 Thai Shrimp*). Accordingly, we are conducting this administrative review with respect to Marine Gold only for shrimp produced in Thailand where Marine Gold acted as either the producer or the exporter (but not both).

Review-Specific Average Rate Applicable to the Following Non-Selected Companies:[11]

Producer/exporter	Dumping margin (percent)
A. Wattanachai Frozen Products Co., Ltd	1.36
A.P. Frozen Foods Co., Ltd	1.36
A.S. Intermarine Foods Co., Ltd	1.36
ACU Transport Co., Ltd	1.36
Ampai Frozen Foods Co., Ltd	1.36
Anglo-Siam Seafoods Co., Ltd	1.36
Apex Maritime (Thailand) Co., Ltd	1.36
Apitoon Enterprise Industry Co., Ltd	1.36
Applied DB	1.36
Asian Seafood Coldstorage (Sriracha)	1.36
Asian Seafoods Coldstorage Public Co., Ltd/Asian Seafoods Coldstorage (Suratthani) Co./STC Foodpak Ltd	1.36
Assoc. Commercial Systems	1.36
B.S.A. Food Products Co., Ltd	1.36
Bangkok Dehydrated Marine Product Co., Ltd	1.36
C Y Frozen Food Co., Ltd	1.36
C.P. Mdse	1.36
C.P. Merchandising Co., Ltd	1.36
CP Retailing and Marketing Co., Ltd	1.36
C.P. Intertrade Co. Ltd	1.36
Calsonic Kansei (Thailand) Co., Ltd	1.36
Century Industries Co., Ltd	1.36
Chaivaree Marine Products Co., Ltd	1.36
Chaiwarut Company Limited	1.36
Charoen Pokphand Foods Public Co., Ltd	1.36
Charoen Pokphand Petrochemical Co., Ltd	1.36
Chonburi LC	1.36
Chue Eie Mong Eak	1.36
Commonwealth Trading Co., Ltd	1.36
Core Seafood Processing Co., Ltd	1.36
CPF Food Products Co., Ltd	1.36
Crystal Frozen Foods Co., Ltd and/or Crystal Seafood	1.36
Daedong (Thailand) Co. Ltd	1.36
Daiei Taigen (Thailand) Co., Ltd	1.36
Daiho (Thailand) Co., Ltd	1.36
Dynamic Intertransport Co., Ltd	1.36
Earth Food Manufacturing Co., Ltd	1.36
F.A.I.T. Corporation Limited	1.36
Far East Cold Storage Co., Ltd	1.36
Fimex VN	1.36
Findus (Thailand) Ltd	1.36
Fortune Frozen Foods (Thailand) Co., Ltd	1.36
Frozen Marine Products Co., Ltd	1.36
Gallant Ocean (Thailand) Co., Ltd	*
Gallant Seafoods Corporation	1.36
Global Maharaja Co., Ltd	1.36
Golden Sea Frozen Foods Co., Ltd	1.36
Golden Thai Imp. & Exp. Co., Ltd	1.36
Good Fortune Cold Storage Co. Ltd	1.36
Good Luck Product Co., Ltd	1.36
Grobest Frozen Foods Co., Ltd	1.36
Gulf Coast Crab Intl.	1.36
H.A.M. International Co., Ltd	1.36
Haitai Seafood Co., Ltd	1.36
Handy International (Thailand) Co., Ltd	1.36
Heng Seafood Limited Partnership	1.36
Heritrade	1.36
HIC (Thailand) Co., Ltd	1.36
High Way International Co., Ltd	1.36
I.T. Foods Industries Co., Ltd	1.36
Inter-Oceanic Resources Co., Ltd	1.36
Inter-Pacific Marine Products Co., Ltd	1.36
I.S.A. Value Co., Ltd	1.36
K & U Enterprise Co., Ltd	1.36
K Fresh	1.36
K. D. Trading Co., Ltd	1.36
K.L. Cold Storage Co., Ltd	1.36

[11] This rate is based on the rates for the respondents that were selected for individual review, excluding rates that are zero, *de minimis* or based entirely on facts available. *See* section 735(c)(5)(A) of the Act.

Producer/exporter	Dumping margin (percent)
KF Foods Limited	1.36
Kiang Huat Sea Gull Trading Frozen Food Public Co., Ltd	1.36
Kibun Trdg	1.36
Kingfisher Holdings Ltd	1.36
Kitchens of the Oceans (Thailand) Company, Ltd	1.36
Klang Co., Ltd	1.36
Kongphop Frozen Foods Co., Ltd	1.36
Lee Heng Seafood Co., Ltd	1.36
Leo Transports	1.36
Li-Thai Frozen Foods Co., Ltd	1.36
Lucky Union Foods Co., Ltd	*
Magnate & Syndicate Co., Ltd	1.36
Mahachai Food Processing Co., Ltd	1.36
Mahachai Marine Foods Co., Ltd	1.36
Marine Gold Products Ltd	1.36
Merit Asia Foodstuff Co., Ltd	1.36
Merkur Co., Ltd	1.36
Ming Chao Ind Thailand	1.36
N&N Foods Co., Ltd	1.36
N.R. Instant Produce Co., Ltd	1.36
Namprik Maesri Ltd Part.	1.36
Narong Seafood Co., Ltd	1.36
Nongmon SMJ Products	1.36
Ongkorn Cold Storage Co., Ltd/Thai-Ger Marine Co., Ltd	1.36
Pacific Queen Co., Ltd	1.36
Pakpanang Coldstorage Public Co., Ltd	1.36
Penta Impex Co., Ltd	1.36
Pinwood Nineteen Ninety Nine	1.36
Piti Seafood Co., Ltd	1.36
Premier Frozen Products Co., Ltd	1.36
Preserved Food Specialty Co., Ltd	1.36
Queen Marine Food Co., Ltd	1.36
Rayong Coldstorage (1987) Co., Ltd	1.36
S&D Marine Products Co., Ltd	1.36
S&P Aquarium	1.36
S&P Syndicate Public Company Ltd	1.36
S. Chaivaree Cold Storage Co., Ltd	1.36
S. Khonkaen Food Industry Public Co., Ltd and/or S. Khonkaen Food Ind. Public	1.36
S.K. Foods (Thailand) Public Co. Limited	1.36
Samui Foods Company Limited	1.36
Saota Seafood Factory	1.36
SB Inter Food Co., Ltd	1.36
SCT Co., Ltd	1.36
Sea Bonanza Food Co., Ltd	1.36
SEA NT'L CO., LTD.	1.36
Seafoods Enterprise Co., Ltd	1.36
Seafresh Fisheries/Seafresh Industry Public Co., Ltd	1.36
Search and Serve	1.36
Sethachon Co., Ltd	1.36
Shianlin Bangkok Co., Ltd	1.36
Shing Fu Seaproducts Development Co.	1.36
Siam Food Supply Co., Ltd	1.36
Siam Haitian Frozen Food Co., Ltd	1.36
Siam Intersea Co., Ltd	1.36
Siam Marine Products Co. Ltd	1.36
Siam Ocean Frozen Foods Co. Ltd	1.36
Siamchai International Food Co., Ltd	1.36
Smile Heart Foods Co. Ltd	1.36
SMP Products, Co., Ltd	1.36
Star Frozen Foods Co., Ltd	1.36
Starfoods Industries Co., Ltd	1.36
Suntechthai Intertrading Co., Ltd	1.36
Surapon Foods Public Co., Ltd/Surat Seafoods Public Co., Ltd	1.36
Surapon Nichirei Foods Co., Ltd	1.36
Suratthani Marine Products Co., Ltd	1.36
Suree Interfoods Co., Ltd	1.36
T.S.F. Seafood Co., Ltd	1.36
Tep Kinsho Foods Co., Ltd	1.36
Teppitak Seafood Co., Ltd	1.36
Tey Seng Cold Storage Co., Ltd	1.36
Thai Agri Foods Public Co., Ltd	1.36
Thai Hanjin Logistics Co., Ltd	1.36
Thai Mahachai Seafood Products Co., Ltd	1.36

Producer/exporter	Dumping margin (percent)
Thai Ocean Venture Co., Ltd	1.36
Thai Patana Frozen	1.36
Thai Prawn Culture Center Co., Ltd	1.36
Thai Royal Frozen Food Co., Ltd	1.36
Thai Spring Fish Co., Ltd	1.36
Thai Union Manufacturing Company Limited	1.36
Thai World Imports and Exports Co., Ltd	1.36
Thai Yoo Ltd, Part.	1.36
The Siam Union Frozen Foods Co., Ltd	1.36
The Union Frozen Products Co., Ltd/Bright Sea Co., Ltd	1.36
Trang Seafood Products Public Co., Ltd	1.36
Transamut Food Co., Ltd	1.36
Tung Lieng Tradg	1.36
United Cold Storage Co., Ltd	1.36
UTXI Aquatic Products Processing Company	1.36
V. Thai Food Product Co., Ltd	1.36
Wann Fisheries Co., Ltd	1.36
Xian-Ning Seafood Co., Ltd	1.36
Yeenin Frozen Foods Co., Ltd	1.36
YHS Singapore Pte	1.36
ZAFCO TRDG	1.36

* No shipments or sales subject to this review.

Disclosure and Public Comment

The Department intends to disclose the calculations performed in connection with these preliminary results to interested parties within five days after the date of publication of this notice.[12] Interested parties may submit cases briefs to the Department no later than 30 days after the date of publication of this notice.[13] Rebuttal briefs, limited to issues raised in the case briefs, may be filed no later than five days after the time limit for filing case briefs.[14] Parties who submit case briefs or rebuttal briefs in this proceeding are encouraged to submit with each argument: (1) A statement of the issue; (2) a brief summary of the argument; and (3) a table of authorities.[15] Case and rebuttal briefs should be filed using ACCESS.[16]

Pursuant to 19 CFR 351.310(c), interested parties who wish to request a hearing must submit a written request to the Assistant Secretary for Enforcement and Compliance, filed electronically via ACCESS. An electronically-filed document must be received successfully in its entirety by ACCESS by 5 p.m. Eastern Standard Time within 30 days after the date of publication of this notice.[17] Hearing requests should contain: (1) The party's name, address, and telephone number; (2) the number of participants; and (3) a list of issues to be discussed. Issues raised in the hearing will be limited to issues raised in the briefs. If a request for a hearing is made, parties will be notified of the time and date for the hearing to be held at the U.S. Department of Commerce, 14th Street and Constitution Avenue NW., Washington, DC 20230.[18]

The Department intends to issue the final results of this administrative review, including the results of its analysis raised in any written briefs, not later than 120 days after the publication date of this notice, pursuant to section 751(a)(3)(A) of the Act.

Assessment Rates

Upon issuance of the final results, the Department shall determine, and CBP shall assess, antidumping duties on all appropriate entries covered by this review.[19]

Pursuant to 19 CFR 351.212(b)(1), where Mayao and Thai Union reported the entered value for of their U.S. sales, we calculated importer-specific *ad valorem* duty assessment rates based on the ratio of the total aount of antidumping duties calculated for the examined sales to the total entered value of the sales for which entered value was reported. Where Mayao and Thai Union have not reported entered value, we calculated the entered value in order to calculate the assessment rates. Where either the respondent's weighted-average dumping margin is zero or *de minimis* within the meaning of 19 CFR 351.106(c), or an importer-specific rate is zero or *de minimis,* we will instruct CBP to liquidate the appropriate entries without regard to antidumping duties.

For the companies which were not selected for individual review, we will assign an assessment rate based on the average[20] of the cash deposit rates calculated for the companies selected for mandatory review (*i.e.,* Mayao and Thai Union), excluding any which are *de minimis* or determined entirely on adverse facts available. The final results of this review shall be the basis for the assessment of antidumping duties on entries of merchandise covered by the final results of this review and for future deposits of estimated duties, where applicable.[21]

We intend to issue liquidation instructions to CBP 15 days after publication of the final results of this review.

Cash Deposit Requirements

The following deposit requirements will be effective for all shipments of the subject merchandise entered, or withdrawn from warehouse, for consumption on or after the publication date of the final results of this administrative review, as provided by section 751(a)(2)(C) of the Act: (1) The cash deposit rate for each specific company listed above will be that established in the final results of this review, except if the rate is less than 0.50 percent and, therefore, *de minimis* within the meaning of 19 CFR 351.106(c)(1), in which case the cash deposit rate will be zero; (2) for previously reviewed or investigated companies not participating in this review, the cash deposit will continue

[12] *See* 19 CFR 351.224(b).
[13] *See* 19 CFR 351.309(c)
[14] *See* 19 CFR 351.309(d).
[15] *See* 19 CFR 351.309(c)(2) and (d)(2).
[16] *See* 19 CFR 351.303.
[17] *See* 19 CFR 351.310(c).
[18] *Id.*
[19] *See* 19 CFR 351.212(b)(1).
[20] This rate will be calculated as discussed in footnote 11, above.
[21] *See* section 751(a)(2)(C) of the Act.

to be the company-specific rate published for the most recently completed segment; (3) if the exporter is not a firm covered in this review, or the original less-than-fair-value (LTFV) investigation, but the manufacturer is, the cash deposit rate will be the rate established for the most recent segment for the manufacturer of the merchandise; and (4) the cash deposit rate for all other manufacturers or exporters will continue to be 5.34 percent, the all-others rate made effective by the *Section 129 Determination.*[22] These deposit requirements, when imposed, shall remain in effect until further notice.

Notification to Importers

This notice also serves as a preliminary reminder to importers of their responsibility under 19 CFR 351.402(f) to file a certificate regarding the reimbursement of antidumping duties prior to liquidation of the relevant entries during this review period. Failure to comply with this requirement could result in the Secretary's presumption that reimbursement of antidumping duties occurred and the subsequent assessment of double antidumping duties.

We are issuing and publishing these results in accordance with sections 751(a)(1) and 777(i)(1) of the Act.

Dated: March 4, 2016.

Paul Piquado,

Assistant Secretary for Enforcement and Compliance.

Appendix

List of Topics Discussed in the Preliminary Decision Memorandum

1. Summary
2. Background
3. Scope of the Order
4. Treatment of Voluntary Respondents
5. Rescission of Review, In Part
6. Preliminary Determination of No Shipments
7. Discussion of the Methodology
   a. Normal Value Comparisons
   b. Determination of Comparison Method
   c. Results of Differential Pricing Analysis
   d. Product Comparisons
   e. Export Price/Constructed Export Price
   f. Normal Value
   i. Home Market Viability
   ii. Affiliated-Party Transactions and Arm's-Length Test
   iii. Level of Trade
   iv. Cost of Production Analysis
   1. Calculation of Cost of Production
   2. Test of Comparison Market Sales Prices
   3. Results of the COP Test
   v. Calculation of Normal Value Based on Comparison Market Prices
8. Currency Conversion
9. Recommendation

[22] *See Implementation of the Findings of the WTO Panel in United States Antidumping Measure on Shrimp from Thailand: Notice of Determination under Section 129 of the Uruguay Round Agreements Act and Partial Revocation of the Antidumping Duty Order on Frozen Warmwater Shrimp from Thailand,* 74 FR 5638 (January 30, 2009) (*Section 129 Determination*).

[FR Doc. 2016–05454 Filed 3–9–16; 8:45 am]

BILLING CODE 3510–DS–P

DEPARTMENT OF COMMERCE

International Trade Administration

Request for Applicants for Appointment to the United States Section of the United States-Turkey Business Council

AGENCY: International Trade Administration, Department of Commerce.

ACTION: Notice.

SUMMARY: In December 2009, the Governments of the United States and Turkey agreed to establish a U.S.-Turkey Business Council. This notice announces membership opportunities for appointment as U.S. representatives to the U.S. Section of the Council for a term beginning January 2016 and ending December 2016.

DATES: Applications for immediate consideration to fill current vacancies should be received no later than March 24. Applications will continue to be accepted until March 31 to fill any additional vacancies that may arise.

ADDRESSES: Please send applications to Aileen Wall, Junior International Trade Specialist, Office of Europe, U.S. Department of Commerce, either by email at *aileen.wall@trade.gov,* or by mail to U.S. Department of Commerce, 1401 Constitution Avenue NW., Room 331918014, Washington, DC 20230.

FOR FURTHER INFORMATION CONTACT: Aileen Wall, Junior International Trade Specialist, Office of Europe, U.S. Department of Commerce, telephone: 202–482–5229.

SUPPLEMENTARY INFORMATION: The Under Secretary for International Trade of the U.S. Department of Commerce and the Ministry of Economy of Turkey co-chair the U.S.-Turkey Business Council, pursuant to the Terms of Reference signed on May 25, 2010, by the U.S. and Turkish Governments, which set forth the objectives and structure of the Council. The Terms of Reference may be viewed at: *http://www.trade.gov/mac/terms-of-reference-us-turkey-business-council.asp.*

The Council is intended to facilitate the exchange of information and encourage bilateral discussions of business and economic issues, including promoting bilateral trade and investment and improving the business climate in each country. The Council brings together the respective business communities of the United States and Turkey to discuss such issues of mutual interest and to communicate their joint recommendations to the U.S. and Turkish Governments. The Council consists of the U.S. and Turkish co-chairs and a Committee comprised of private sector members. The Committee is composed of two Sections of private sector members, a U.S. Section and a Turkish Section, each consisting of approximately ten to twelve members, representing the views and interests of their respective private sector business communities. Each government will appoint the members to its respective Section. The Committee will provide joint recommendations to the two governments that reflect private sector views, needs, and concerns regarding creation of an environment in which the private sectors of both countries can partner, thrive, and enhance bilateral commercial ties that could form the basis for expanded trade and investment between the United States and Turkey.

The Department of Commerce is seeking applicants for membership on the U.S. Section of the Committee to fill four current vacancies and any additional vacancies that may arise during the current member appointment term. Each applicant must be a senior-level executive of a U.S.-owned or controlled company that is incorporated in and has its main headquarters located in the United States and that is currently doing business in Turkey. Each applicant also must be a U.S. citizen, or otherwise legally authorized to work in the United States, and be able to travel to Turkey and locations in the United States to attend official Council meetings, as well as U.S. Section and Committee meetings. In addition, the applicant may not be a registered foreign agent under the Foreign Agents Registration Act of 1938, as amended.

Evaluation of applications for membership in the U.S. Section by eligible individuals will be based on the following criteria:

—A demonstrated commitment by the applicant's company to the Turkish market either through exports or investment.

—A demonstrated strong interest by the applicant's company in Turkey and its economic development.

—The ability by the applicant to offer a broad perspective on the business environment in Turkey, including cross-cutting issues that affect the entire business community.

—The ability by the applicant to initiate and be responsible for activities in which the Council will be active.

Members will be selected on the basis of who will best carry out the objectives of the Council as stated in the Terms of Reference establishing the U.S.-Turkey Business Council. In selecting members of the U.S. Section, the Department of Commerce will also seek to ensure that the Section represents a diversity of business sectors and geographical locations, as well as a cross-section of small, medium, and large-sized firms.

U.S. members will receive no compensation for their participation in Council-related activities. They shall not be considered as special government employees. Individual private sector members will be responsible for all travel and related expenses associated with their participation in the Council, including attendance at Committee and Section meetings. Only appointed members may participate in official Council meetings; substitutes and alternates may not be designated. Members will normally serve for two-year terms, but may be reappointed.

To apply for membership, please submit the following information as instructed in the **ADDRESSES** and **DATES** captions above:

1. Name(s) and title(s) of the applicant(s);
2. Name and address of the headquarters of the applicant's company;
3. Location of incorporation of the applicant's company;
4. Percentage share of U.S. citizen ownership in the company;
5. Size of the company in terms of number of employees;
6. Dollar amount of the company's export trade to Turkey;
7. Dollar amount of the company's investments in Turkey;
8. Nature of the company's investments, operations or interest in Turkey;
9. An affirmative statement that the applicant is a U.S. citizen or otherwise legally authorized to work in the United States;
10. An affirmative statement that the applicant is neither registered nor required to register as a foreign agent under the Foreign Agents Registration Act of 1938, as amended;
11. An affirmative statement that the applicant meets all other eligibility requirements;
12. A brief statement of why the applicant should be considered;
13. A brief statement of how the applicant meets the four listed criteria, including information about the candidate's ability to initiate and be responsible for activities in which the Council will be active.

Applications will be considered as they are received. All candidates will be notified of whether they have been selected.

Dated: March 4, 2016.

Stephen Alley,

Acting Director of the Office of European Country Affairs (OECA).

[FR Doc. 2016–05350 Filed 3–9–16; 8:45 am]

BILLING CODE 3510–DA–P

DEPARTMENT OF COMMERCE

International Trade Administration

[A–552–802]

Certain Frozen Warmwater Shrimp From the Socialist Republic of Vietnam: Preliminary Results of Antidumping Duty Administrative Review and Partial Rescission of Review; 2014–2015

AGENCY: Enforcement and Compliance, International Trade Administration, Department of Commerce.

SUMMARY: In response to requests from interested parties, the Department of Commerce (''Department'') is conducting an administrative review of the antidumping duty order on certain frozen warmwater shrimp from the Socialist Republic of Vietnam (''Vietnam'') for the period of review February 1, 2014, through January 31, 2015. The Department preliminarily determines that sales by the Minh Phu Group [1] and Stapimex,[2] the two mandatory respondents, were made below normal value (''NV''). Interested parties are invited to comment on these preliminary results.[3]

DATES: *Effective:* March 10, 2016.

FOR FURTHER INFORMATION CONTACT: Irene Gorelik or Robert Palmer, AD/CVD Operations, Office V, Enforcement and Compliance, International Trade Administration, Department of Commerce, 1401 Constitution Avenue NW, Washington, DC 20230; telephone: (202) 482–6905, or (202) 482–9068, respectively.

SUPPLEMENTARY INFORMATION:

Scope of the Order

The merchandise subject to the *Order* is certain frozen warmwater shrimp. The product is currently classified under the following Harmonized Tariff Schedule of the United States (HTSUS) item numbers: 0306.17.00.03, 0306.17.00.06, 0306.17.00.09, 0306.17.00.12, 0306.17.00.15, 0306.17.00.18, 0306.17.00.21, 0306.17.00.24, 0306.17.00.27, 0306.17.00.40, 1605.21.10.30, and 1605.29.10.10. Although the HTSUS numbers are provided for convenience and for customs purposes, the written product description, available in the Preliminary Decision Memorandum, remains dispositive.[4]

Methodology

The Department conducted this review in accordance with section 751(a)(1)(A) of the Tariff Act of 1930, as amended (''the Act''). Constructed export prices and export prices were calculated in accordance with section 772 of the Act. Because Vietnam is a nonmarket economy within the meaning of section 771(18) of the Act, NV was calculated in accordance with section 773(c) of the Act.

For a full description of the methodology underlying our conclusions, *see* Preliminary Decision Memorandum. The Preliminary Decision Memorandum is a public document and is on file electronically via the Enforcement and Compliance's Antidumping and Countervailing Duty Centralized Electronic Service System (''ACCESS''). ACCESS is available to

---

[1] Minh Phu Seafood Corporation, Minh Qui Seafood Co., Ltd., Minh Phat Seafood Co., Ltd., and Minh Phu Hau Giang Seafood Joint Stock Company (collectively, the ''Minh Phu Group''). The Department previously collapsed the companies within the Minh Phu Group in the ninth administrative review. See *Certain Frozen Warmwater Shrimp From the Socialist Republic of Vietnam: Final Results of Antidumping Duty Administrative Review, 2013–2014,* 80 FR 55328 (September 15, 2015). There have been no changes since the preceding administrative review regarding the corporate or legal structure of the companies within the Minh Phu Group. Thus, we continue to find that these companies are affiliated and comprise a single entity to which we will assign a single rate.

[2] Soc Trang Seafood Joint Stock Company (''Stapimex'').

[3] Further, as explained in the memorandum from the Acting Assistant Secretary for Enforcement & Compliance, the Department has exercised its discretion to toll all administrative deadlines due to the recent closure of the Federal Government. All deadlines in this segment of the proceeding have been extended by four business days. The revised deadline for the preliminary results of this review is now March 4, 2016. *See* Memorandum to the Record, from Ron Lorentzen, Acting Assistant Secretary for Enforcement and Compliance, ''Tolling of Administrative Deadlines as a Result of the Government Closure during Snowstorm Jonas,'' dated January 27, 2016.

[4] For a complete description of the Scope of the Order, *see* Memorandum to Paul Piquado, Assistant Secretary for Enforcement and Compliance, from Christian Marsh, Deputy Assistant Secretary for Antidumping and Countervailing Duty Operations, titled ''Decision Memorandum for Preliminary Results of Antidumping Duty Administrative Review: Certain Frozen Warmwater Shrimp from the Socialist Republic of Vietnam; 2014–2015,'' dated concurrently with and adopted by this notice (''Preliminary Decision Memorandum'').

registered users at *http://access.trade.gov* and in the Central Records Unit, room B8024 of the main Department of Commerce building. In addition, a complete version of the Preliminary Decision Memorandum can be accessed directly on the internet at *http://enforcement.trade.gov/frn/.* The signed Preliminary Decision Memorandum and the electronic versions of the Preliminary Decision Memorandum are identical in content.

Preliminary Determination of No Shipments

Based on our analysis of U.S. Customs and Border Protection (''CBP'') information and information provided by a number of companies, we preliminarily determine that 15 companies [5] did not have any reviewable transactions during the POR. In addition, the Department finds, consistent with its refinement to its assessment practice in non-market economy cases, that it is appropriate not to rescind the review in part in these circumstances, but to complete the review with respect to these 15 companies and issue appropriate instructions to CBP based on the final results of the review.[6] For additional information regarding this determination, *see* the Preliminary Decision Memorandum.

Partial Rescission of Review

On July 2, 2015, both Petitioner and ASPA filed timely withdrawals of their review requests for Seavina Joint Stock Company.[7] Pursuant to 19 CFR 351.213(d)(1), the Department will rescind an administrative review, in whole or in part, if the party that requested the review withdraws its request within 90 days of the date of publication of the notice of initiation of the requested review. Because both Petitioner and ASPA withdrew their requests for administrative review of Seavina Joint Stock Company within 90 days of the date of publication of the *Initiation Notice,* and no other interested party requested a review of this company, the Department is rescinding this review with respect to Seavina Joint Stock Company, in accordance with 19 CFR 351.213(d)(1).

Preliminary Results of Review

The Department finds that 51 companies for which a review was requested have not established eligibility for a separate rate and are considered to be part of the Vietnam-wide entity for these preliminary results.[8] The Department's change in policy regarding conditional review of the Vietnam-wide entity applies to this administrative review.[9] Under this policy, the Vietnam-wide entity will not be under review unless a party specifically requests, or the Department self-initiates, a review of the entity. Because no party requested a review of the Vietnam-wide entity, the entity is not under review and the entity's rate is not subject to change. For companies for which a review was requested and that have established eligibility for a separate rate, the Department preliminarily determines that the following weighted-average dumping margins exist:

Exporter [10]	Weighted-average margin (percent)
Minh Phu Group:	
Minh Phu Seafood Corp., aka Minh Phu Seafood Corporation, aka Minh Qui Seafood Co., Ltd., aka Minh Phat Seafood Co., Ltd., aka Minh Phu Hau Giang Seafood Joint Stock Company	2.86
Soc Trang Seafood Joint Stock Company, aka Stapimex	4.78
Bac Lieu Fisheries Joint Stock Company	3.56
C.P. Vietnam Corporation	3.56
Cadovimex Seafood Import-Export and Processing Joint Stock Company	3.56
Camau Frozen Seafood Processing Import Export Corporation, aka Camau Seafood Factory No. 4	3.56
Can Tho Import Export Fishery Limited Company	3.56
Camau Seafood Processing and Service Joint Stock Corporation	3.56
Cuulong Seaproducts Company	3.56
Gallant Dachan Seafood Co., Ltd.	3.56
Green Farms Seafood Joint Stock Company	3.56
Hai Viet Corporation	3.56
Investment Commerce Fisheries Corporation	3.56
Kim Anh Company Limited, aka Kim Anh Co., Ltd.	3.56
Minh Hai Export Frozen Seafood Processing Joint-Stock Company	3.56
Minh Hai Joint-Stock Seafoods Processing Company	3.56
Nha Trang Fisheries Joint Stock Company	3.56
Nha Trang Seafoods Group:	
Nha Trang Seaproduct Company, aka NT Seafoods Corporation, aka Nha Trang Seafoods—F89 Joint Stock Company, aka NTSF Seafoods Joint Stock Company, aka	3.56
Ngoc Tri Seafood Joint Stock Company	3.56

[5] These 15 companies are: (1) BIM Seafood Joint Stock Company; (2) Bien Dong Seafood Co., Ltd.; (3) Cafatex Fishery Joint Stock Corporation; (4) Camranh Seafoods Processing Enterprise Pte.; (5) Coastal Fisheries Development Corporation; (6) Bentre Forestry Aquaproduct Import-Export Joint Stock Company; (7) Fine Foods Co.; (8) Gallant Ocean (Vietnam) Co., Ltd.; (9) Long Toan Frozen Aquatic Products Joint Stock Company; (10) Nhat Duc Co., Ltd.; (11) Ngo Bros Seaproducts Import-Export One Member Company Limited; (12) Thong Thuan Seafood Company Limited; (13) Tacvan Seafoods Company; (14) Tan Phong Phu Seafood Co., Ltd.; and (15) Vinh Hoan Corporation.

[6] *See Non-Market Economy Antidumping Proceedings: Assessment of Antidumping Duties,* 76 FR 65694 (October 24, 2011) (''*Assessment Notice*''); see also ''Assessment Rates'' section below.

[7] *See* Petitioner's and ASPA's July 2, 2015, ''Partial Withdrawal of Request for Review.''

[8] *See* Appendix II for a full list of the 51 companies; *see also* Preliminary Decision Memorandum, at 12–13.

[9] *See Antidumping Proceedings: Announcement of Change in Department Practice for Respondent Selection in Antidumping Duty Proceedings and Conditional Review of the Nonmarket Economy Entity in NME Antidumping Duty Proceedings,* 78 FR 65963 (November 4, 2013).

[10] Due to the issues we have had in the past with variations of exporter names related to this *Order,* we remind exporters that the names listed in the rate box are the exact names, including spelling and punctuation which the Department will provide to CBP and which CBP will use to assess POR entries and collect cash deposits. *See, e.g.,* Minh Phu Seafood Corporation's Separate Rate Certification dated May 4, 2015, at Attachment A, page 1, where Minh Phu Seafood Corporation stated that the initiated name of ''Minh Phu Seafood Export Import Corporation (and affiliates Minh Qui Seafood Co. Ltd. and Minh Phat Seafood Co., Ltd.) and/or Minh Phu Seafood Export Import Corporation (and affiliates Minh Qui Seafood Co. Ltd. and Minh Phat Seafood Co., Ltd.) (collectively ''Minh Phu Group'')'' was requested for initiation as such by Petitioners but that ''the company does not use this combined name.'' Indeed, many of the names requested for review by Petitioners and ASPA are, in fact, non-existent combinations of company names.

Exporter [10]	Weighted-average margin (percent)
Phuong Nam Foodstuff Corp.	3.56
Quang Minh Seafood Co., Ltd.	3.56
Quoc Viet Seaproducts Processing Trading and Import-Export Co., Ltd.	3.56
Sao Ta Foods Joint Stock Company, aka Fimex VN, aka Saota Seafood Factory	3.56
Seaprimexco Vietnam	3.56
Taika Seafood Corporation	3.56
Thong Thuan Company Limited, aka T&T Co., Ltd	3.56
Thuan Phuoc Seafoods and Trading Corporation	3.56
Trong Nhan Seafood Company Limited	3.56
UTXI Aquatic Products Processing Corporation, aka Hoang Phuong Seafood Factory, aka Hoang Phong Seafood Factory	3.56
Viet Foods Co., Ltd.	3.56
Vietnam Clean Seafood Corporation	3.56
Viet I-Mei Frozen Foods Co., Ltd.	3.56

Disclosure and Public Comment

The Department will disclose the calculations used in our analysis to parties in this review within five days of the date of publication of this notice. Pursuant to 19 CFR 351.309(c)(1)(ii), interested parties may submit case briefs no later than 30 days after the publication of these preliminary results, and rebuttal comments within five days after the time limit for filing case briefs. Parties who submit case briefs or rebuttal briefs are requested to submit with the argument: (1) A statement of the issue; (2) a brief summary of the argument; and (3) a table of authorities.[11] Rebuttal briefs must be limited to issues raised in the case briefs.[12]

Pursuant to 19 CFR 351.310(c), interested parties who wish to request a hearing must submit a written request to the Assistant Secretary for Enforcement and Compliance within 30 days of the date of publication of this notice. Requests should contain: (1) The party's name, address and telephone number; (2) the number of participants; and (3) a list of issues parties intend to discuss. Issues raised in the hearing will be limited to those raised in the respective case and rebuttal briefs. If a request for a hearing is made, the Department intends to hold the hearing at the U.S. Department of Commerce, 1401 Constitution Avenue NW., Washington, DC 20230, at a date and time to be determined.[13] Parties should confirm by telephone the date, time, and location of the hearing two days before the scheduled date. Interested parties are invited to comment on the preliminary results of this review.

The Department intends to issue the final results of this administrative review, including the results of our analysis of issues raised in the written comments, within 120 days of publication of these preliminary results in the **Federal Register**.

Assessment Rates

Upon issuance of the final results, the Department will determine, and CBP shall assess, antidumping duties on all appropriate entries covered by this review.[14] The Department intends to issue assessment instructions to CBP 15 days after the publication date of the final results of this review. For any individually examined respondent whose weighted average dumping margin is above *de minimis* (*i.e.,* is 0.50 percent or more) in the final results of this review, the Department will calculate importer-specific assessment rates on the basis of the ratio of the total amount of dumping calculated for the importer's examined sales and the total entered value of sales, in accordance with 19 CFR 351.212(b)(1).[15] We will instruct CBP to assess antidumping duties on all appropriate entries covered by this review when the importer-specific assessment rate calculated in the final results of this review is above *de minimis.* Where either the respondent's weighted-average dumping margin is zero or *de minimis,* or an importer-specific assessment rate is zero or *de minimis,* we will instruct CBP to liquidate the appropriate entries without regard to antidumping duties. For the final results, if we continue to treat the 51 companies identified above as part of the Vietnam-wide entity, we will instruct CBP to apply an *ad valorem* assessment rate of 25.76 percent to all entries of subject merchandise during the POR which were produced and/or exported by those companies.

The final results of this review shall be the basis for the assessment of antidumping duties on entries of merchandise covered by the final results of this review and for future deposits of estimated duties, where applicable.

Cash Deposit Requirements

The following cash deposit requirements will be effective upon publication of the final results of this administrative review for shipments of the subject merchandise from Vietnam entered, or withdrawn from warehouse, for consumption on or after the publication date, as provided by sections 751(a)(2)(C) of the Act: (1) For the companies listed above, which have a separate rate, the cash deposit rate will be that established in the final results of this review (except, if the rate is zero or *de minimis,* then zero cash deposit will be required); (2) for previously investigated or reviewed Vietnam and non-Vietnam exporters not listed above that received a separate rate in a prior segment of this proceeding, the cash deposit rate will continue to be the existing exporter-specific rate; (3) for all Vietnam exporters of subject merchandise that have not been found to be entitled to a separate rate, the cash deposit rate will be the existing rate for the Vietnam-wide entity of 25.76 percent; and (4) for all non-Vietnam exporters of subject merchandise which have not received their own rate, the cash deposit rate will be the rate applicable to the Vietnam exporter that supplied that non-Vietnam exporter. These deposit requirements, when imposed, shall remain in effect until further notice.

Notification to Importers

This notice also serves as a preliminary reminder to importers of their responsibility under 19 CFR 351.402(f)(2) to file a certificate

[11] *See* 19 CFR 351.309(c) and (d).

[12] *See* 19 CFR 351.309(d)(2).

[13] *See* 19 CFR 351.310(d).

[14] *See* 19 CFR 351.212(b).

[15] In these preliminary results, the Department applied the assessment rate calculation method adopted in *Antidumping Proceedings: Calculation of the Weighted-Average Dumping Margin and Assessment Rate in Certain Antidumping Proceedings; Final Modification,* 77 FR 8101 (February 14, 2012).

regarding the reimbursement of antidumping duties prior to liquidation of the relevant entries during this review period. Failure to comply with this requirement could result in the Department's presumption that reimbursement of antidumping duties occurred and the subsequent assessment of double antidumping duties.

This determination is issued and published in accordance with sections 751(a)(1) and 777(i)(1) of the Act and 19 CFR 351.221(b)(4).

Dated: March 3, 2016.

Paul Piquado,

Assistant Secretary for Enforcement and Compliance.

Appendix I

List of Topics Discussed in the Preliminary Decision Memorandum

1. Summary
2. Background
3. Extension of Preliminary Results
4. Respondent Selection
5. Scope of the Order
6. Partial Rescission of Review
7. Preliminary Determination of No Shipments
8. Non-Market Economy Country
9. Separate Rates
10. Separate Rate Calculation
11. Vietnam-Wide Entity
12. Surrogate Country and Surrogate Value Data
    a. Surrogate Country
    b. Economic Comparability
    c. Significant Producers of Comparable Merchandise
    d. Data Availability
    e. Public Availability and Broad-Market Average
    f. Specificity
    g. Contemporaneity and Tax and Duty Exclusive
13. Date of Sale
14. Comparisons to Normal Value
    a. Determination of Comparison Method
    b. Results of the Differential Pricing Analysis
15. U.S. Price
    a. Export Price
    b. Constructed Export Price
16. Normal Value
    a. Exclusion Requests
17. Factor Valuations
18. Currency Conversion
19. Verification
20. Conclusion

Appendix II

Companies Subject to Review Determined To Be Part of the Vietnam-Wide Entity

1. Amanda Foods (Vietnam) Ltd. Ngoc Tri Seafood Company (Amanda's affiliate)
2. Amanda Seafood Co., Ltd.
3. An Giang Coffee JSC
4. Anvifish Joint Stock Co.
5. Asia Food Stuffs Import Export Co., Ltd.
6. B.O.P. Limited Co.
7. Binh An Seafood Joint Stock Company
8. Can Tho Agricultural and Animal Product Import Export Company (''CATACO'')
   Can Tho Agricultural and Animal Products Imex Company
   Can Tho Agricultural and Animal Products Import Export Company (''CATACO'')
   Can Tho Agricultural Products
   Can Tho Agricultural Products
9. Can Tho Import Export Seafood Joint Stock Company (CASEAMEX)
10. Cau Tre Enterprise (C. T. E.)
11. Cautre Export Goods Processing Joint Stock Company
12. CL Fish Co., Ltd. (Cuu Long Fish Company)
13. Danang Seaproducts Import Export Corporation (''Seaprodex Danang'')
    Danang Seaproducts Import-Export Corporation (''Seaprodex Danang'') (and its affiliates)
    Danang Seaproducts Import-Export Corporation (and its affiliate, Tho Quang Seafood Processing and Export Company) (collectively ''Seaprodex Danang'')
    Seaprodex Danang
    Tho Quang Co.
    Tho Quang Seafood Processing and Export Company
    Frozen Seafoods Factory No. 32 (Tho Quang Seafood Processing and Export Company)
14. D & N Foods Processing (Danang Company Ltd.)
15. Duy Dai Corporation
16. Gallant Ocean (Quang Ngai) Co., Ltd.
17. Gn Foods
18. Hai Thanh Food Company Ltd.
19. Hai Vuong Co., Ltd.
20. Han An Trading Service Co., Ltd.
21. Hoang Hai Company Ltd.
22. Hua Heong Food Industries Vietnam Co. Ltd.
23. Huynh Huong Seafood Processing (Huynh Houng Trading and Import Export Joint Stock Company)
24. Interfood Shareholding Co.
25. Khanh Loi Seafood Factory
26. Kien Long Seafoods Co. Ltd.
27. Luan Vo Fishery Co., Ltd.
28. Minh Chau Imp. Exp. Seafood Processing Co., Ltd.
29. Minh Cuong Seafood Import Export Frozen Processing Joint Stock Company (''Minh Cuong Seafood'')
30. Mp Consol Co., Ltd.
31. Ngoc Chau Co., Ltd. and/or Ngoc Chau Seafood Processing Company
32. Ngoc Sinh
    Ngoc Sinh Fisheries
    Ngoc Sinh Private Enterprises
    Ngoc Sinh Seafood Processing Company
    Ngoc Sinh Seafood Trading & Processing Enterprise
    Ngoc Sinh Seafoods
33. Phu Cuong Jostoco Corp.
    Phu Cuong Jostoco Seafood Corporation
34. Quang Ninh Export Aquatic Products Processing Factory
35. Quang Ninh Seaproducts Factory
36. Quoc Ai Seafood Processing Import Export Co., Ltd.
37. S.R.V. Freight Services Co., Ltd.
38. Sustainable Seafood
39. Tan Thanh Loi Frozen Food Co., Ltd.
40. Thanh Doan Seaproducts Import & Export Processing Joint-Stock Company (THADIMEXCO)
41. Thanh Hung Frozen Seafood Processing Import Export Co., Ltd.
42. Thanh Tri Seafood Processing Co. Ltd.
43. Thinh Hung Co., Ltd.
44. Tien Tien Garment Joint Stock Company
45. Tithi Co., Ltd.
46. Trang Khan Seafood Co., Ltd.
47. Viet Cuong Seafood Processing Import Export Joint-Stock Company
48. Vietnam Fish One Co., Ltd.
    Viet Hai Seafood Co., Ltd.
    Vietnam Fish-One Co., Ltd. (''Fish One'') (Viet Hai Seafood Co., Ltd.)
49. Vietnam Northern Viking Technologies Co. Ltd.
50. Vinatex Danang
51. Vinh Loi Import Export Company (''VIMEX'')
    Vinh Loi Import Export Company (''Vimexco'')

[FR Doc. 2016–05406 Filed 3–9–16; 8:45 am]

BILLING CODE 3510–DS–P

DEPARTMENT OF COMMERCE

International Trade Administration

[A–533–840]

Certain Frozen Warmwater Shrimp From India: Preliminary Results of Antidumping Duty Administrative Review, Preliminary Determination of No Shipments; 2014–2015

AGENCY: Enforcement and Compliance, International Trade Administration, Department of Commerce.

SUMMARY: The Department of Commerce (Department) is conducting an administrative review of the antidumping duty order on certain frozen warmwater shrimp (shrimp) from India. The review covers 223 producers and/or exporters of the subject merchandise.[1] The Department selected two mandatory respondents for individual examination, Falcon Marine Exports Limited and its affiliate K.R. Enterprises (collectively, Falcon) and the Liberty Group.[2] The period of review (POR) is February 1, 2014, through January 31, 2015. We preliminarily determine that sales to the United States have been made below normal value and, therefore, are subject to antidumping duties. Additionally, we preliminarily determine that certain companies for which we initiated a review did not have any shipments

[1] *See Certain Frozen Warmwater Shrimp From India and Thailand: Notice of Initiation of Antidumping Duty Administrative Reviews,* 80 FR 16634 (March 30, 2015) (*Initiation Notice*).

[2] The Liberty Group consists of: Devi Marine Food Exports Private Ltd.; Kader Exports Private Limited; Kader Investment and Trading Company Private Limited; Liberty Frozen Foods Pvt. Ltd.; Liberty Oil Mills Ltd.; Premier Marine Products Private Limited; and Universal Cold Storage Private Limited.

during the POR. If these preliminary results are adopted in the final results of this review, we will instruct U.S. Customs and Border Protection (CBP) to assess antidumping duties on all appropriate entries. We invite all interested parties to comment on these preliminary results.

DATES: Effective March 10, 2016.

FOR FURTHER INFORMATION CONTACT: Elizabeth Eastwood or Blaine Wiltse, AD/CVD Operations, Office II, Enforcement and Compliance, International Trade Administration, U.S. Department of Commerce, 14th Street and Constitution Avenue NW., Washington, DC 20230; telephone: (202) 482–3874, or (202) 482–6345, respectively.

SUPPLEMENTARY INFORMATION: As explained in the memorandum from the Acting Assistant Secretary for Enforcement & Compliance, the Department has exercised its discretion to toll all administrative deadlines due to the recent closure of the Federal Government. All deadlines in this segment of the proceeding have been extended by four business days. The revised deadline for the preliminary results of this review is now March 4, 2016.[3]

Scope of the Order

The merchandise subject to the order is certain frozen warmwater shrimp.[4] The product is currently classified under the following Harmonized Tariff Schedule of the United States (HTSUS) item numbers: 0306.17.00.03, 0306.17.00.06, 0306.17.00.09, 0306.17.00.12, 0306.17.00.15, 0306.17.00.18, 0306.17.00.21, 0306.17.00.24, 0306.17.00.27, 0306.17.00.40, 1605.21.10.30, and 1605.29.10.10. Although the HTSUS numbers are provided for convenience and for customs purposes, the written product description remains dispositive.

Methodology

The Department is conducting this review in accordance with section 751(a)(2) of the Tariff Act of 1930, as amended (the Act). Export price is calculated in accordance with section 772 of the Act. Normal value is calculated in accordance with section 773 of the Act.

For a full description of the methodology underlying our conclusions, *see* the Preliminary Decision Memorandum. The Preliminary Decision Memorandum is a public document and is on file electronically *via* Enforcement and Compliance's Antidumping and Countervailing Duty Centralized Electronic Service System (ACCESS). ACCESS is available to registered users at *http://access.trade.gov,* and it is available to all parties in the Central Records Unit, room B8024 of the main Department of Commerce building. In addition, a complete version of the Preliminary Decision Memorandum can be accessed directly at *http://enforcement.trade.gov/frn/index.html.* The signed and electronic versions of the Preliminary Decision Memorandum are identical in content. A list of the topics discussed in the Preliminary Decision Memorandum is attached as the Appendix to this notice.

Preliminary Determination of No Shipments

Among the companies under review, 19[5] companies properly filed statements reporting that they made no shipments of subject merchandise to the United States during the POR.[6] Based on the certifications submitted by these companies and our analysis of CBP information, we preliminarily determine that the following companies had no reviewable transactions during the POR:

(1) Amulya Sea Foods;
(2) Ayshwarya Seafood Private Limited;
(3) Baby Marine International;
(4) Baby Marine Sarass;
(5) Blue Water Foods & Exports P. Ltd.;
(6) Capithan Exporting Co.;
(7) Cherukattu Industries (Marine Div.);
(8) Coreline Exports;
(9) Delsea Exports Pvt. Ltd.:
(10) GVR Exports Pvt. Ltd.;
(11) Geo Aquatic Products (P) Ltd.;
(12) Indo Fisheries;
(13) Navayuga Exports Ltd.;
(14) R F Exports;
(15) Santhi Fisheries & Exports Ltd.;
(16) Selvam Exports Private Limited;
(17) Sterling Foods;
(18) Veronica Marine Exports Private Limited; and
(19) Vinner Marine.

The Department finds that it is not appropriate to preliminarily rescind the review with respect to these companies but, rather, to complete the review with respect to these companies and issue appropriate instructions to CBP based on the final results of this review.

Preliminary Results of the Review

As a result of this review, we preliminarily determine that weighted-average dumping margins exist for the respondents for the period February 1, 2014, through January 31, 2015, as follows:

Producer/exporter	Dumping margin (percent)
Falcon Marine Exports Limited/K.R. Enterprises	0.80
The Liberty Group	8.32

[3] *See* Memorandum to the Record from Ron Lorentzen, Acting A/S for Enforcement & Compliance, regarding ''Tolling of Administrative Deadlines As a Result of the Government Closure During Snowstorm Jonas,'' dated January 27, 2016.

[4] For a complete description of the Scope of the Order, *see* the memorandum from Christian Marsh, Deputy Assistant Secretary for Antidumping and Countervailing Duty Operations, to Paul Piquado, Assistant Secretary for Enforcement and Compliance, entitled, ''Decision Memorandum for the Preliminary Results of the 2014–2015 Administrative Review of the Antidumping Duty Order on Certain Frozen Warmwater Shrimp from India'' (dated concurrently with these results) (Preliminary Decision Memorandum), which is hereby adopted by this notice.

[5] The Department also received a properly-filed statement from an additional company, Britto Sea Foods Pvt. Ltd. However, because we received no request for an administrative review for this company, we have not considered this no shipments statement in this segment of the proceeding.

[6] For a full explanation of the Department's analysis, *see* the Preliminary Decision Memorandum.

Review-Specific Average Rate Applicable to the Following Companies: [7]

Producer/exporter	Dumping margin (percent)
Abad Fisheries	4.98
Adilakshmi Enterprises	4.98
Akshay Food Impex Private Limited	4.98
Allana Frozen Foods Pvt. Ltd	4.98
Allanasons Ltd	4.98
AMI Enterprises	4.98
Amulya Sea Foods	*
Anand Aqua Exports	4.98
Ananda Aqua Applications/Ananda Aqua Exports (P) Limited/Ananda Foods	4.98
Ananda Enterprises (India) Private Limited	4.98
Andaman Sea Foods Pvt. Ltd	4.98
Angelique Intl	4.98
Anjaneya Seafoods	4.98
Apex Frozen Foods Private Limited	4.98
Aquatica Frozen Foods Global Pvt. Ltd	4.98
Arvi Import & Export	4.98
Asvini Exports	4.98
Asvini Fisheries Private Limited	4.98
Avanti Feeds Limited	4.98
Ayshwarya Seafood Private Limited	*
B R Traders	4.98
Baby Marine Exports	4.98
Baby Marine International	*
Baby Marine Sarass	*
Balasore Marine Exports Private Limited	4.98
Bhatsons Aquatic Products	4.98
Bhavani Seafoods	4.98
Bijaya Marine Products	4.98
Blue Fin Frozen Foods Pvt. Ltd	4.98
Blue Water Foods & Exports P. Ltd	*
Bluepark Seafoods Private Ltd	4.98
BMR Exports	4.98
BMR Industries Private Limited	4.98
Britto Exports	4.98
C P Aquaculture (India) Ltd	4.98
Calcutta Seafoods Pvt. Ltd	4.98
Canaan Marine Products	4.98
Capithan Exporting Co.	*
Castlerock Fisheries Ltd	4.98
Chemmeens (Regd)	4.98
Cherukattu Industries (Marine Div.)	*
Choice Canning Company	4.98
Choice Trading Corporation Private Limited	4.98
Coastal Aqua	4.98
Coastal Corporation Ltd	4.98
Cochin Frozen Food Exports Pvt. Ltd	4.98
Coreline Exports	*
Corlim Marine Exports Pvt. Ltd	4.98
D2 D Logistics Private Limited	4.98
Damco India Private Limited	4.98
Delsea Exports Pvt. Ltd	*
Devi Fisheries Limited/Satya Seafoods Private Limited/Usha Seafoods	4.98
Diamond Seafoods Exports/Edhayam Frozen Foods Pvt. Ltd./Kadalkanny Frozen Foods/Theva & Company	4.98
Devi Sea Foods Limited [8]	4.98
Digha Seafood Exports	4.98
Esmario Export Enterprises	4.98
Exporter Coreline Exports	4.98
Febin Marine Foods	4.98

[7] This rate is based on the weighted-average of the margins calculated for Falcon and the Liberty Group using the publicly-ranged U.S. sales quantities for each company . Because we cannot apply our normal methodology of calculating a weighted-average margin due to requests to protect business proprietary information, we find this rate to be the best proxy of the actual weighted-average margin determined for the mandatory respondents. *See Ball Bearings and Parts Thereof From France, et al.: Final Results of Antidumping Duty Administrative Reviews, Final Results of Changed-Circumstances Review, and Revocation of an Order in Part,* 75 FR 53661, 53663 (September 1, 2010); *see also* the memorandum from Blaine Wiltse, Senior International Trade Compliance Analyst, to the file, entitled, ''Calculation of the Review-Specific Average Rate in the 2014–2015 Administrative Review of Certain Frozen Warmwater Shrimp from India,'' dated concurrently with these results.

[8] Shrimp produced and exported by Devi Sea Foods (Devi) was excluded from the AD Indian order effective February 1, 2009. *See Certain Frozen Warmwater Shrimp From India: Final Results of Antidumping Duty Administrative Review, Partial Rescission of Review, and Notice of Revocation of Order in Part,* 75 FR 41813, 41814 (July 19, 2010). Accordingly, we are conducting this administrative review with respect to Devi only for shrimp produced in India where Devi acted as either the manufacturer or exporter (but not both).

Producer/exporter	Dumping margin (percent)
Five Star Marine Exports Private Limited	4.98
Forstar Frozen Foods Pvt. Ltd	4.98
Frontline Exports Pvt. Ltd	4.98
G A Randerian Ltd	4.98
Gadre Marine Exports	4.98
Galaxy Maritech Exports P. Ltd	4.98
Gayatri Seafoods	4.98
Geo Aquatic Products (P) Ltd	*
Geo Seafoods	4.98
Goodwill Enterprises	4.98
Grandtrust Overseas (P) Ltd	4.98
GVR Exports Pvt. Ltd	*
Haripriya Marine Export Pvt. Ltd	4.98
Harmony Spices Pvt. Ltd	4.98
HIC ABF Special Foods Pvt. Ltd	4.98
Hindustan Lever, Ltd	4.98
Hiravata Ice & Cold Storage	4.98
Hiravati Exports Pvt. Ltd	4.98
Hiravati International P. Ltd. (located at APM—Mafco Yard, Sector—18, Vashi, Navi, Mumbai—400 705, India)	4.98
Hiravati International Pvt. Ltd. (located at Jawar Naka, Porbandar, Gujarat, 360 575, India)	4.98
IFB Agro Industries Ltd	4.98
Indian Aquatic Products	4.98
Indo Aquatics	4.98
Indo Fisheries	*
Indo French Shellfish Company Private Limited	4.98
Innovative Foods Limited	4.98
International Freezefish Exports	4.98
Interseas	4.98
ITC Limited, International Business	4.98
ITC Ltd	4.98
Jagadeesh Marine Exports	4.98
Jaya Satya Marine Exports	4.98
Jaya Satya Marine Exports Pvt. Ltd	4.98
Jayalakshmi Sea Foods Private Limited	4.98
Jinny Marine Traders	4.98
Jiya Packagings	4.98
K R M Marine Exports Ltd	4.98
K V Marine Exports	4.98
Kalyan Aqua & Marine Exports India Pvt. Ltd	4.98
Kalyanee Marine	4.98
Kanch Ghar	4.98
Karunya Marine Exports Private Limited	4.98
Kay Kay Exports	4.98
Kings Marine Products	4.98
Koluthara Exports Ltd	4.98
Konark Aquatics & Exports Pvt. Ltd	4.98
Landauer Ltd	4.98
Libran Cold Storages (P) Ltd	4.98
Magnum Estates Limited	4.98
Magnum Export	4.98
Magnum Sea Foods Limited	4.98
Malabar Arabian Fisheries	4.98
Malnad Exports Pvt. Ltd	4.98
Mangala Marine Exim India Pvt. Ltd	4.98
Mangala Sea Products	4.98
Mangala Seafoods	4.98
Meenaxi Fisheries Pvt. Ltd	4.98
Milesh Marine Exports Private Limited	4.98
MSRDR Exports	4.98
MTR Foods	4.98
Munnangi Sea Foods Pvt. Ltd	4.98
N.C. John & Sons (P) Ltd	4.98
Naga Hanuman Fish Packers	4.98
Naik Frozen Foods Private Limited	4.98
Naik Seafoods Ltd	4.98
Navayuga Exports	*
Neeli Aqua Private Limited	4.98
Nekkanti Sea Foods Limited	4.98
Nezami Rekha Sea Foods Private Limited	4.98
NGR Aqua International	4.98
Nila Sea Foods Exports	4.98
Nila Sea Foods Pvt. Ltd	4.98
Nine Up Frozen Foods	4.98

Producer/exporter	Dumping margin (percent)
Nutrient Marine Foods Limited	4.98
Oceanic Edibles International Limited	4.98
Overseas Marine Export	4.98
Paragon Sea Foods Pvt. Ltd	4.98
Paramount Seafoods	4.98
Parayil Food Products Pvt. Ltd	4.98
Penver Products Pvt. Ltd	4.98
Pesca Marine Products Pvt. Ltd	4.98
Pijikay International Exports P Ltd	4.98
Pisces Seafood International	4.98
Premier Exports International	4.98
Premier Marine Foods	4.98
Premier Seafoods Exim (P) Ltd	4.98
R V R Marine Products Limited	4.98
Raa Systems Pvt. Ltd	4.98
Raju Exports	4.98
Ram's Assorted Cold Storage Ltd	4.98
Raunaq Ice & Cold Storage	4.98
Raysons Aquatics Pvt. Ltd	4.98
Razban Seafoods Ltd	4.98
RBT Exports	4.98
RDR Exports	4.98
RF Exports	*
Riviera Exports Pvt. Ltd	4.98
Rohi Marine Private Ltd	4.98
S & S Seafoods	4.98
S Chanchala Combines	4.98
S. A. Exports	4.98
S.J. Seafoods	4.98
Safa Enterprises	4.98
Sagar Foods	4.98
Sagar Grandhi Exports Private Limited	4.98
Sagar Samrat Seafoods	4.98
Sagarvihar Fisheries Pvt. Ltd	4.98
Sai Marine Exports Pvt. Ltd	4.98
SAI Sea Foods	4.98
Salvam Exports (P) Ltd	4.98
Sanchita Marine Products Private Limited	4.98
Sandhya Aqua Exports	4.98
Sandhya Aqua Exports Pvt. Ltd	4.98
Sandhya Marines Limited	4.98
Santhi Fisheries & Exports Ltd	*
Sarveshwari Exports	4.98
Sawant Food Products	4.98
Sea Foods Private Limited	4.98
Seagold Overseas Pvt. Ltd	4.98
Selvam Exports Private Limited	*
Sharat Industries Ltd	4.98
Sharma Industries	4.98
Shimpo Exports Pvt. Ltd	4.98
Shippers Exports	4.98
Shiva Frozen Food Exports Pvt. Ltd	4.98
Shree Datt Aquaculture Farms Pvt. Ltd	4.98
Shroff Processed Food & Cold Storage P Ltd	4.98
Silver Seafood	4.98
Sita Marine Exports	4.98
Sowmya Agri Marine Exports	4.98
Sprint Exports Pvt. Ltd	4.98
Sri Chandrakantha Marine Exports	4.98
Sri Sakkthi Cold Storage	4.98
Sri Satya Marine Exports	4.98
Sri Venkata Padmavathi Marine Foods Pvt. Ltd	4.98
Srikanth International	4.98
Star Agro Marine Exports Private Limited	4.98
Star Organic Foods Incorporated	4.98
Sterling Foods	*
Sun-Bio Technology Ltd	4.98
Supran Exim Private Limited	4.98
Suryamitra Exim Pvt. Ltd	4.98
Suvarna Rekha Exports Private Limited	4.98
Suvarna Rekha Marines P Ltd	4.98
TBR Exports Pvt Ltd	4.98
Teekay Marine P. Ltd	4.98

Producer/exporter	Dumping margin (percent)
Tejaswani Enterprises	4.98
The Waterbase Ltd	4.98
Triveni Fisheries P Ltd	4.98
Uniroyal Marine Exports Ltd	4.98
Unitriveni Overseas	4.98
V V Marine Products	4.98
V.S Exim Pvt Ltd	4.98
Vasista Marine	4.98
Veejay Impex	4.98
Veronica Marine Exports Private Limited	*
Victoria Marine & Agro Exports Ltd	4.98
Vinner Marine	*
Vishal Exports	4.98
Vitality Aquaculture Pvt., Ltd	4.98
Wellcome Fisheries Limited	4.98
West Coast Frozen Foods Private Limited	4.98
Z A Sea Foods Pvt. Ltd	4.98

* No shipments or sales subject to this review.

Disclosure and Public Comment

The Department intends to disclose the calculations performed in connection with these preliminary results to interested parties within five days after the date of publication of this notice.[9] Interested parties may submit cases briefs to the Department no later than 30 days after the date of publication of this notice.[10] Rebuttal briefs, limited to issues raised in the case briefs, may be filed no later than five days after the time limit for filing case briefs.[11] Parties who submit case briefs or rebuttal briefs in this proceeding are encouraged to submit with each argument: (1) A statement of the issue; (2) a brief summary of the argument; and (3) a table of authorities.[12] Case and rebuttal briefs should be filed using ACCESS.[13]

Pursuant to 19 CFR 351.310(c), interested parties who wish to request a hearing must submit a written request to the Assistant Secretary for Enforcement and Compliance, filed electronically via ACCESS. An electronically-filed document must be received successfully in its entirety by ACCESS by 5 p.m. Eastern Standard Time within 30 days after the date of publication of this notice.[14] Hearing requests should contain: (1) The party's name, address, and telephone number; (2) the number of participants; and (3) a list of issues to be discussed. Issues raised in the hearing will be limited to issues raised in the briefs. If a request for a hearing is made, parties will be notified of the time and date for the hearing to be held at the U.S. Department of Commerce, 14th Street and Constitution Avenue NW., Washington, DC 20230.[15]

The Department intends to issue the final results of this administrative review, including the results of its analysis raised in any written briefs, not later than 120 days after the publication date of this notice, pursuant to section 751(a)(3)(A) of the Act.

Assessment Rates

Upon completion of the administrative review, the Department shall determine, and CBP shall assess, antidumping duties on all appropriate entries, in accordance with 19 CFR 351.201(b).

Pursuant to 19 CFR 351.212(b)(1), because Falcon and the Liberty Group reported the entered value for of their all their U.S. sales, we calculated importer-specific *ad valorem* duty assessment rates based on the ratio of the total amount of antidumping duties calculated for the examined sales to the total entered value of the sales for which entered value was reported. Where either the respondent's weighted-average dumping margin is zero or *de minimis* within the meaning of 19 CFR 351.106(c), or an importer-specific rate is zero or *de minimis,* we will instruct CBP to liquidate the appropriate entries without regard to antidumping duties.

For the companies which were not selected for individual review, we will assign an assessment rate based on the average[16] of the cash deposit rates calculated for the companies selected for mandatory review (*i.e.,* Falcon and the Liberty Group), excluding any which are *de minimis* or determined entirely on adverse facts available. The final results of this review shall be the basis for the assessment of antidumping duties on entries of merchandise covered by the final results of this review and for future deposits of estimated duties, where applicable.[17]

We intend to issue liquidation instructions to CBP 15 days after publication of the final results of this review.

Cash Deposit Requirements

The following deposit requirements will be effective for all shipments of the subject merchandise entered, or withdrawn from warehouse, for consumption on or after the publication date of the final results of this administrative review, as provided by section 751(a)(2)(C) of the Act: (1) The cash deposit rate for each specific company listed above will be that established in the final results of this review, except if the rate is less than 0.50 percent and, therefore, *de minimis* within the meaning of 19 CFR 351.296(c)(1), in which case the cash deposit rate will be zero; (2) for previously reviewed or investigated companies not participating in this review, the cash deposit will continue to be the company-specific rate published for the most recently completed segment; (3) if the exporter is not a firm covered in this review, or the original less-than-fair-value (LTFV) investigation, but the manufacturer is, the cash deposit rate will be the rate established for the most recent segment for the manufacturer of the merchandise; and (4) the cash deposit rate for all other manufacturers or exporters will continue to be 10.17 percent, the all-others rate made

[9] *See* 19 CFR 351.224(b).

[10] *See* 19 CFR 351.309(c)

[11] *See* 19 CFR 351.309(d).

[12] *See* 19 CFR 351.309(c)(2) and (d)(2).

[13] *See* 19 CFR 351.303.

[14] *See* 19 CFR 351.310(c).

[15] *Id.*

[16] This rate will be calculated as discussed in footnote 8, above.

[17] *See* section 751(a)(2)(C) of the Act.

effective by the LTFV investigation.[18] These deposit requirements, when imposed, shall remain in effect until further notice.

Notification to Importers

This notice also serves as a preliminary reminder to importers of their responsibility under 19 CFR 351.402(f) to file a certificate regarding the reimbursement of antidumping duties prior to liquidation of the relevant entries during this review period. Failure to comply with this requirement could result in the Secretary's presumption that reimbursement of antidumping duties occurred and the subsequent assessment of double antidumping duties.

We are issuing and publishing these results in accordance with sections 751(a)(1) and 777(i)(1) of the Act.

Dated: March 4, 2016.

Paul Piquado,

Assistant Secretary for Enforcement and Compliance.

Appendix

List of Topics Discussed in the Preliminary Decision Memorandum

1. Summary
2. Background
3. Scope of the Order
4. Preliminary Determination of No Shipments
5. Discussion of the Methodology
   a. Normal Value Comparisons
   b. Determination of Comparison Method
   c. Results of Differential Pricing Analysis
   d. Product Comparisons
   e. Export Price
   f. Normal Value
   i. Home Market Viability and Comparison Market
   ii. Level of Trade
   iii. Cost of Production Analysis
   1. Calculation of Cost of Production
   2. Test of Comparison Market Sales Prices
   3. Results of the COP Test
   iv. Calculation of Normal Value Based on Comparison Market Prices
   v. Calculation of Normal Value Based on Constructed Value
6. Currency Conversion
7. Recommendation

[FR Doc. 2016–05453 Filed 3–9–16; 8:45 am]

BILLING CODE 3510–DS–P

[18] *See Notice of Amended Final Determination of Sale at Less Than Fair Value and Antidumping Duty Order: Certain Frozen Warmwater Shrimp from India,* 70 FR 5147 (February 1, 2005).

DEPARTMENT OF COMMERCE

International Trade Administration

[A–570–042]

Stainless Steel Sheet and Strip From the People's Republic of China: Initiation of Less Than Fair Value Investigation

AGENCY: Enforcement and Compliance, International Trade Administration, Department of Commerce.

DATES: Effective March 3, 2016.

FOR FURTHER INFORMATION CONTACT: Toni Page at (202) 482–1398 and Lingjun Wang (202) 482–2316, AD/CVD Operations, Enforcement and Compliance, U.S. Department of Commerce, 14th Street and Constitution Avenue NW., Washington, DC 20230.

SUPPLEMENTARY INFORMATION:

The Petition

On February 12, 2016, the Department of Commerce (Department) received an antidumping duty (AD) petition concerning imports of stainless steel sheet and strip (stainless sheet and strip) from the People's Republic of China (PRC), filed in proper form on behalf of AK Steel Corporation, Allegheny Ludlum, LLC d/b/a ATI Flat Rolled Products, North American Stainless, and Outokumpu Stainless USA, LLC, (collectively, Petitioners).[1] The AD petition was accompanied by a countervailing duty (CVD) petition for stainless steel and strip from the PRC.[2] Petitioners are domestic producers of stainless sheet and strip, which represents the domestic industry engaged in the manufacture of stainless sheet and strip in the United States.[3]

On February 17 and 23, 2016, the Department requested additional information and clarification of certain areas of the Petition,[4] and Petitioners timely filed responses to these requests on February 19, 22, and 25, 2016 and an amendment to the scope section of the petition.[5]

In accordance with section 732(b) of the Tariff Act of 1930, as amended (the Act), Petitioners allege that imports of stainless sheet and strip from the PRC are being, or are likely to be, sold in the United States at less than fair value within the meaning of section 731 of the Act, and that such imports are materially injuring, or threatening material injury to, an industry in the United States. Also, consistent with section 732(b)(1) of the Act, the Petition is accompanied by information reasonably available to Petitioners supporting their allegations.

The Department finds that Petitioners filed the Petition on behalf of the domestic industry because Petitioners satisfy the definition of an interested party in section 771(9)(C) of the Act. The Department also finds that Petitioners demonstrated sufficient industry support with respect to the initiation of the AD investigation that Petitioners are requesting.[6]

Period of Investigation

Because the Petition was filed on February 12, 2016, the period of investigation (POI) is, pursuant to 19 CFR 351.204(b)(1), July 1, 2015, through December 31, 2015.

Scope of the Investigation

The products covered by this investigation are stainless sheet and strip from the PRC. For a full description of the scope of this investigation, *see* the ''Scope of the Investigation,'' in Appendix I of this notice.

Comments on Scope of the Investigation

During our review of the Petition, the Department issued questions to, and received responses from, Petitioners pertaining to the proposed scope to ensure that the scope language in the Petition would be an accurate reflection of the products for which the domestic industry is seeking relief.[7]

[1] *See* the Petitions for the Imposition of Antidumping Duties and Countervailing Duties: Stainless Steel Sheet and Strip from the People's Republic of China, (February 12, 2016) (the Petition).

[2] *Id.*

[3] *See* Volume I of the Petition at 2.

[4] *See* Letters from the Department to Petitioners entitled ''Petitions for the Imposition of Antidumping and Countervailing Duties on Imports of Stainless Steel Sheet and Strip from the People's Republic of China: Supplemental Questions,'' (February 17, 2016) (General Issues Supplemental Questionnaire); and ''Petition for the Imposition of Antidumping Duties on Imports of Stainless Steel Sheet and Strip from the People's Republic of China,'' (February 17, 2016) (AD Supplemental Questionnaire); *see also* Memorandum to the File, ''Phone Call with Counsel to Petitioners,'' (February 23, 2016)

[5] *See* Petitioners' Response to the AD Supplemental Questionnaire, (February 19, 2016) (AD Petition Supplement); Petitioners' Response to the General Issues Supplemental Questionnaire, (February 19, 2016) (General Issues Supplement); Petitioners' Submission of Signed Declaration Included in Responses to the Department's Supplemental Questionnaire Relating to Antidumping Duty Petition, (February 22, 2016) (AD Petition Supplement Signed Declaration); and Second General Issues Supplement to the Petition, (February 25, 2016) (Second General Issues Supplement).

[6] *See* the ''Determination of Industry Support for the Petition'' section below.

[7] *See* General Issues Supplemental Questionnaire; *see also* General Issues Supplement; Memorandum

Continued

As discussed in the preamble to the Department's regulations,[8] we are setting aside a period for interested parties to raise issues regarding product coverage (*i.e.,* the scope). The Department will consider all comments received from parties and, if necessary, will consult with parties prior to the issuance of the preliminary determination. If scope comments include factual information (*see* 19 CFR 351.102(b)(21)), all such factual information should be limited to public information. In order to facilitate preparation of its questionnaires, the Department requests all interested parties to submit such comments by 5:00 p.m. Eastern Time (ET) on March 23, 2016, which is 20 calendar days from the signature date of this notice. Any rebuttal comments, which may include factual information, must be filed by 5:00 p.m. ET on Monday, April 4, 2016, because 10 calendar days after the initial comments deadline falls on Saturday, April 2, 2016.[9]

The Department requests that any factual information the parties consider relevant to the scope of the investigation be submitted during this time period. However, if a party subsequently finds that additional factual information pertaining to the scope of the investigation may be relevant, the party may contact the Department and request permission to submit the additional information. All such comments must be filed on the record of the AD investigation, as well as the concurrent CVD investigation.

Filing Requirements

All submissions to the Department must be filed electronically using Enforcement and Compliance's Antidumping and Countervailing Duty Centralized Electronic Service System (ACCESS).[10] An electronically filed document must be received successfully in its entirety by the time and date when it is due. Documents excepted from the electronic submission requirements must be filed manually (*i.e.,* in paper form) with Enforcement and Compliance's APO/Dockets Unit, Room 18022, U.S. Department of Commerce, 14th Street and Constitution Avenue NW., Washington, DC 20230, and stamped with the date and time of receipt by the applicable deadlines.

Comments on Product Characteristics for AD Questionnaires

The Department requests comments from interested parties regarding the appropriate physical characteristics of stainless sheet and strip to be reported in response to the Department's AD questionnaires. This information will be used to identify the key physical characteristics of the subject merchandise in order to report the relevant factors and costs of production as accurately as well as to develop appropriate product-comparison criteria.

Interested parties may provide any information or comments that they feel are relevant to the development of an accurate list of physical characteristics. Specifically, they may provide comments as to which characteristics are appropriate to use as: (1) general product characteristics and (2) product-comparison criteria. We note that it is not always appropriate to use all product characteristics as product-comparison criteria. We base product-comparison criteria on meaningful commercial differences among products. In other words, although there may be some physical product characteristics utilized by manufacturers to describe stainless sheet and strip, it may be that only a select few product characteristics take into account commercially meaningful physical characteristics. In addition, interested parties may comment on the order of the physical characteristics defining a product. Generally, the Department attempts to list the most important physical characteristics first and the least important characteristics last.

In order to consider the suggestions of interested parties in developing and issuing the AD questionnaires, all comments must be filed by 5:00 p.m. ET on March 23, 2016, which is 20 calendar days from the signature date of this notice. Any rebuttal comments must be filed by 5:00 p.m. ET on April 4, 2016. All comments and submissions to the Department must be filed electronically using ACCESS.

Determination of Industry Support for the Petition

Section 732(b)(1) of the Act requires that a petition be filed on behalf of the domestic industry. Section 732(c)(4)(A) of the Act provides that a petition meets this requirement if the domestic producers or workers who support the petition account for: (i) at least 25 percent of the total production of the domestic like product; and (ii) more than 50 percent of the production of the domestic like product produced by that portion of the industry expressing support for, or opposition to, the petition. Moreover, section 732(c)(4)(D) of the Act provides that, if the petition does not establish support of domestic producers or workers accounting for more than 50 percent of the total production of the domestic like product, the Department shall: (i) poll the industry or rely on other information in order to determine if there is support for the petition, as required by subparagraph (A); or (ii) determine industry support using a statistically valid sampling method to poll the ''industry.''

Section 771(4)(A) of the Act defines the ''industry'' as the producers as a whole of a domestic like product. Thus, to determine whether a petition has the requisite industry support, the statute directs the Department to look to producers and workers who produce the domestic like product. The International Trade Commission (ITC), which is responsible for determining whether ''the domestic industry'' has been injured, must also determine what constitutes a domestic like product in order to define the industry. While both the Department and the ITC must apply the same statutory definition regarding the domestic like product,[11] they do so for different purposes and pursuant to a separate and distinct authority. In addition, the Department's determination is subject to limitations of time and information. Although this may result in different definitions of the like product, such differences do not render the decision of either agency contrary to law.[12]

Section 771(10) of the Act defines the domestic like product as ''a product which is like, or in the absence of like, most similar in characteristics and uses with, the article subject to an investigation under this title.'' Thus, the reference point from which the domestic like product analysis begins is

to the File, ''Phone Call with Counsel to Petitioners,'' (February 23, 2016); and Second General Issues Supplement.

[8] *See Antidumping Duties; Countervailing Duties,* 62 FR 27296, 27323 (May 19, 1997).

[9] *See* 19 CFR 351.303(b)(1) (''For both electronically filed and manually filed documents, if the applicable due date falls on a non-business day, the Secretary will accept documents that are filed on the next business day.'')

[10] *See Antidumping and Countervailing Duty Proceedings: Electronic Filing Procedures; Administrative Protective Order Procedures,* 76 FR 39263 (July 6, 2011); *see also Enforcement and Compliance; Change of Electronic Filing System Name,* 79 FR 69046 (November 20, 2014) for details of the Department's electronic filing requirements, which went into effect on August 5, 2011. Information on help using ACCESS can be found at *https://access.trade.gov/help.aspx* and a handbook can be found at *https://access.trade.gov/help/Handbook%20on%20Electronic%20Filling%20Procedures.pdf.*

[11] *See* section 771(10) of the Act.

[12] *See USEC, Inc.* v. *United States,* 132 F. Supp. 2d 1, 8 (CIT 2001) (citing *Algoma Steel Corp., Ltd.* v. *United States,* 688 F. Supp. 639, 644 (CIT 1988), *aff'd* 865 F.2d 240 (Fed. Cir. 1989)).

''the article subject to an investigation'' (*i.e.,* the class or kind of merchandise to be investigated, which normally will be the scope as defined in the Petition).

With regard to the domestic like product, Petitioners do not offer a definition of the domestic like product distinct from the scope of the investigation. Based on our analysis of the information submitted on the record, we have determined that stainless sheet and strip constitutes a single domestic like product and we have analyzed industry support in terms of that domestic like product.[13]

In determining whether Petitioners have standing under section 732(c)(4)(A) of the Act, we considered the industry support data contained in the Petition with reference to the domestic like product as defined in the ''Scope of the Investigation,'' in Appendix I of this notice. Petitioners provided their production of the domestic like product in 2015, as well as an estimate of total production of the domestic like product for the entire domestic industry.[14] To establish industry support, Petitioners compared their own production to total estimated production of the domestic like product for the entire domestic industry.[15] We have relied upon data Petitioners provided for purposes of measuring industry support.[16]

Our review of the data provided in the Petition, the Second General Issues Supplement, and other information readily available to the Department indicates that Petitioners have established industry support.[17] First, the Petition established support from domestic producers (or workers) accounting for more than 50 percent of the total production of the domestic like product and, as such, the Department is not required to take further action in order to evaluate industry support (*e.g.,* polling).[18] Second, the domestic producers (or workers) have met the statutory criteria for industry support under section 732(c)(4)(A)(i) of the Act because the domestic producers (or workers) who support the Petition account for at least 25 percent of the total production of the domestic like product.[19] Finally, the domestic producers (or workers) have met the statutory criteria for industry support under section 732(c)(4)(A)(ii) of the Act because the domestic producers (or workers) who support the Petition account for more than 50 percent of the production of the domestic like product produced by that portion of the industry expressing support for, or opposition to, the Petition.[20] Accordingly, the Department determines that the Petition was filed on behalf of the domestic industry within the meaning of section 732(b)(1) of the Act.

The Department finds that Petitioners filed the Petition on behalf of the domestic industry because they are interested parties as defined in section 771(9)(C) of the Act and they have demonstrated sufficient industry support with respect to the AD investigation that they are requesting the Department to initiate.[21]

Allegations and Evidence of Material Injury and Causation

Petitioners allege that the U.S. industry producing the domestic like product is being materially injured, or is threatened with material injury, by reason of the imports of the subject merchandise sold at less than normal value (NV). In addition, Petitioners allege that subject imports exceed the negligibility threshold provided for under section 771(24)(A) of the Act.[22]

Petitioners contend that the industry's injured condition is illustrated by reduced market share, underselling and price suppression or depression, lost sales and revenues, reductions in U.S. production, shipments, and capacity utilization, decreased employment, and financial deterioration.[23] We have assessed the allegations and supporting evidence regarding material injury, threat of material injury, and causation, and we have determined that these allegations are properly supported by adequate evidence and meet the statutory requirements for initiation.[24]

Allegation of Sales at Less Than Fair Value

The following is a description of the allegation of sales at less than fair value upon which the Department based its decision to initiate the investigation of stainless sheet and strip from the PRC. The sources of data for the deductions and adjustments relating to U.S. price and NV are discussed in greater detail in the initiation checklist.

Export Price

Petitioners based U.S. prices on price quotes for stainless sheet and strip produced in the PRC by affiliated companies of Baosteel Group Corporations (Baosteel) and Taiyuan Iron & Steel (Group) Co., Ltd. (TISCO), and offered for sale to customers in the United States.[25] Petitioners made deductions from U.S. price for movement expenses consistent with the delivery terms, as well as deductions for distributor mark-up and unrebated VAT.

Normal Value

Petitioners stated that the Department has found the PRC to be a non-market economy (NME) country in every administrative proceeding in which the PRC has been involved.[26] In accordance with section 771(18)(C)(i) of the Act, the presumption of NME status remains in effect until revoked by the Department. The presumption of NME status for the PRC has not been revoked by the Department and, therefore, remains in effect for purposes of the initiation of this investigation. Accordingly, the NV of the product is appropriately based on factors of production (FOP) valued in a surrogate market economy country, in accordance with section 773(c) of the Act. In the course of this investigation, all parties, and the public, will have the opportunity to provide relevant information related to the issues of the PRC's NME status and the granting of separate rates to individual exporters.

Petitioners claim that Thailand is an appropriate surrogate country because it is a market economy that is at a level of economic development comparable to

[13] For a discussion of the domestic like product analysis in this case, *see* Antidumping Duty Investigation Initiation Checklist: Stainless Steel Sheet and Strip from the People's Republic of China (PRC AD Initiation Checklist), at Attachment II, Analysis of Industry Support for the Antidumping and Countervailing Duty Petitions Covering Stainless Steel Sheet and Strip from the People's Republic of China (Attachment II). This checklist is dated concurrently with this notice and on file electronically via ACCESS. Access to documents filed via ACCESS is also available in the Central Records Unit, Room 18022 of the main Department of Commerce building.

[14] *See* Volume I of the Petition, at 4–5 and Exhibits GEN–1 and GEN–12.

[15] *Id.* For further discussion, *see* PRC AD Initiation Checklist, at Attachment II.

[16] *See* PRC AD Initiation Checklist, at Attachment II.

[17] *Id.*

[18] *See* section 732(c)(4)(D) of the Act; *see also* PRC AD Initiation Checklist, at Attachment II

[19] *See* PRC AD Initiation Checklist, at Attachment II.

[20] *Id.*

[21] *Id.*

[22] *See* Volume I of the Petition, at 13 and Exhibit GEN–6; *see also* Second General Issues Supplement, at 4–5 and Exhibit GEN-Supp. 6.

[23] *See* Volume I of the Petition, at 14–19 and Exhibits GEN–6 and GEN–8 through GEN–12; *see also* Second General Issues Supplement, at 4–5 and Exhibit GEN-Supp. 5.

[24] *See* PRC AD Initiation Checklist, at Attachment III, Analysis of Allegations and Evidence of Material Injury and Causation for the Antidumping and Countervailing Duty Petitions Covering Stainless Steel Sheet and Strip from the People's Republic of China.

[25] *See* Volume II of the Petition at 2, Exhibits AD–1A and AD–1B; *see also,* AD Petition Supplement at 2 and Exhibit AD-Supp. 1A; and AD Petition Supplement Signed Declaration at Attachment 1.

[26] *See* Volume II of the Petition at 2.

that of the PRC and it is a significant producer of comparable merchandise.[27]

Based on the information provided by Petitioners, we believe it is appropriate to use Thailand as a surrogate country for initiation purposes. Interested parties will have the opportunity to submit comments regarding surrogate country selection and, pursuant to 19 CFR 351.301(c)(3)(i), will be provided an opportunity to submit publicly available information to value FOPs within 30 days before the scheduled date of the preliminary determination.

Factors of Production (FOP)

Petitioners based the FOPs for materials, labor, and energy on average major U.S. producers' consumption rates for producing stainless sheet and strip adjusted for known differences that can be quantified based on the experience of the U.S. industry, as an estimate of the PRC producers' FOPs.[28] Petitioners valued the estimated FOPs using surrogate values from Thailand, with the exception of surrogate financial ratios.[29]

Valuation of Raw Materials

Petitioners valued the FOPs for raw materials using public import data for Thailand obtained from the Global Trade Atlas (GTA) for the POI.[30] Petitioners excluded all import values from countries previously determined by the Department to maintain broadly available, non-industry-specific export subsidies and from countries previously determined by the Department to be NME countries. In addition, in accordance with the Department's practice, Petitioners exclude imports that were labeled as originating from an unidentified country. Petitioners added to these import values the average inland freight charges for importing goods into Thailand as reported in *Doing Business 2016: Thailand,* based on the distance from the nearest port to the PRC producer's mill.[31] The Department determines that the surrogate values used by Petitioners are reasonably available, and thus, are acceptable for purposes of initiation.

Valuation of Labor

Petitioners valued labor using *The 2012 Business and Industrial Census: Manufacturing Industry, Whole Kingdom,* published by the National Statistical Office of Thailand.[32] Specifically, Petitioners relied on data pertaining to wages earned by Thai workers engaged in the manufacturing sector of the economy.[33] Petitioners inflated the wage rate using data for the Thailand Consumer Price Index (CPI) published for the POI.[34]

Valuation of Packing Materials

Petitioners valued the packing materials used by PRC producers based on Thai import data for the POI obtained from GTA.[35]

Valuation of Energy/Water

Petitioners valued electricity using data published by the Electricity Generating Authority of Thailand.[36] In addition, Petitioners valued natural gas using Thai import data of liquid natural gas and universal conversion factors.[37] Further, Petitioners valued water using the tariff rate published by the Thai Metropolitan Waterworks Authority.[38]

Valuation of Factory Overhead, Selling, General and Administrative Expenses, and Profit

Petitioners relied on surrogate financial ratios (*i.e.,* factory overhead, Selling, General & Administrative expenses, and profit) it calculated using the 2014 audited financial statement of Grupo Simec, S.A.B. de C.V., a Mexican producer of comparable merchandise (*i.e.,* processed steel products).[39]

Fair Value Comparisons

Based on the data provided by Petitioners, there is reason to believe that imports of stainless sheet and strip from the PRC are being, or are likely to be, sold in the United States at less than fair value. Based on comparisons of EP to NV, in accordance with section 773(c) of the Act, the estimated dumping margin for stainless sheet and strip from the PRC are 51.07 and 76.64 percent.[40]

Initiation of Less Than Fair Value Investigation

Based upon the examination of the AD Petition on stainless sheet and strip from the PRC, we find that the Petition meets the requirements of section 732 of the Act. Therefore, we are initiating an AD investigation to determine whether imports of stainless sheet and strip from the PRC are being, or are likely to be, sold in the United States at less than fair value. In accordance with section 733(b)(1)(A) of the Act and 19 CFR 351.205(b)(1), unless postponed, we will make our preliminary determination no later than 140 days after the date of this initiation.

On June 29, 2015, the President of the United States signed into law the Trade Preferences Extension Act of 2015, which made numerous amendments to the AD and CVD law.[41] The 2015 law does not specify dates of application for those amendments. On August 6, 2015, the Department published an interpretative rule, in which it announced the applicability dates for each amendment to the Act, except for amendments contained in section 771(7) of the Act, which relate to determinations of material injury by the ITC.[42] The amendments to sections 771(15), 773, 776, and 782 of the Act are applicable to all determinations made on or after August 6, 2015, and, therefore, apply to this AD investigation.[43]

Respondent Selection

Petitioners named 158 companies from the PRC as producers/exporters of stainless sheet and strip.[44] Following standard practice for respondent selection in cases involving NME countries, we intend to issue quantity and value (Q&V) questionnaires to each potential respondent, for which Petitioners have provided a complete address, and base respondent selection on the responses received. In addition, the Department will post the Q&V questionnaire along with filing instructions on the Enforcement and Compliance Web site at *http://www.trade.gov/enforcement/news.asp.*

Exporters/producers of stainless sheet and strip from the PRC that do not receive Q&V questionnaires by mail may still submit a response to the Q&V

[27] *Id.,* at 1–2.

[28] *Id.,* at 6 and Exhibit AD–9.

[29] *Id.,* at Exhibit AD–10. As discussed in the PRC AD Initiation Checklist, Petitioners used surrogate financial ratios from the financial statements of a Mexican steel producer, because they were unable to obtain publicly available financial statements of an integrated steel producer in Thailand, and to the best of their knowledge, many Thai producers also benefit from potentially countervailable subsidies. *Id.,* at 7 and 9.

[30] *Id.,* at Exhibit AD–13.

[31] *Id.,* at 7 and Exhibits AD–3A; *see also* AD Petition Supplement, at 3 and AD-Supp. 3A.

[32] *Id.,* at 8 and Exhibit AD–15.

[33] *Id.*

[34] *Id.,* at Exhibits AD–12 and AD–15.

[35] *Id.,* at Exhibits AD–10A, AD–10B, and AD–13.

[36] *Id.,* at 7 and Exhibit AD–14A.

[37] *Id.,* at Exhibit AD–14B.

[38] *See* AD Petition Supplement at 3–4 and Exhibit AD-Supp.2.

[39] *See* Volume II of the Petition at 7 and Exhibit AD–16; for further discussion of the surrogate financial ratios, *see* PRC AD Initiation Checklist.

[40] *See* PRC AD Initiation Checklist.

[41] *See* Trade Preferences Extension Act of 2015, Public Law 114–27, 129 Stat. 362 (2015).

[42] *See Dates of Application of Amendments to the Antidumping and Countervailing Duty Laws Made by the Trade Preferences Extension Act of 2015,* 80 FR 46793 (August 6, 2015) (''*Applicability Notice''*).

[43] *Id.* at 46794–95. The 2015 amendments may be found at *https://www.congress.gov/bill/114th-congress/house-bill/1295/text/pl.*

[44] *See* Volume I of Petition at Exhibit GEN–5.

questionnaire and can obtain a copy from the Enforcement and Compliance Web site. The Q&V response must be submitted by all PRC exporters/producers no later than March 17, 2016, which is two weeks from the signature date of this notice. All Q&V responses must be filed electronically *via* ACCESS.

Separate Rates

In order to obtain separate-rate status in an NME investigation, exporters and producers must submit a separate-rate application.[45] The specific requirements for submitting a separate-rate application are outlined in detail in the application itself, which is available on the Department's Web site at *http://enforcement.trade.gov/nme/nme-sep-rate.html.* The separate-rate application will be due 30 days after publication of this initiation notice.[46] Exporters and producers who submit a separate-rate application and have been selected as mandatory respondents will be eligible for consideration for separate-rate status only if they respond to all parts of the Department's AD questionnaire as mandatory respondents. The Department requires that respondents submit a response to both the Q&V questionnaire and the separate-rate application by their respective deadlines in order to receive consideration for separate-rate status.

Use of Combination Rates

The Department will calculate combination rates for certain respondents that are eligible for a separate rate in an NME investigation. The Separate Rates and Combination Rates Bulletin states:

{w}hile continuing the practice of assigning separate rates only to exporters, all separate rates that the Department will now assign in its NME Investigation will be specific to those producers that supplied the exporter during the period of investigation. Note, however, that one rate is calculated for the exporter and all of the producers which supplied subject merchandise to it during the period of investigation. This practice applies both to mandatory respondents receiving an individually calculated separate rate as well as the pool of non-investigated firms receiving the weighted-average of the individually calculated rates. This practice is referred to as the application of ''combination rates'' because such rates apply to specific combinations of exporters and one or more producers. The cash-deposit rate assigned to an exporter will apply only to merchandise both exported by the firm in question *and* produced by a firm that supplied the exporter during the period of investigation.[47]

Distribution of Copies of the Petition

In accordance with section 732(b)(3)(A) of the Act and 19 CFR 351.202(f), a copy of the public version of the Petition has been provided to the government of the PRC *via* ACCESS. To the extent practicable, we will attempt to provide a copy of the public version of the Petition to each exporter named in the Petition, as provided under 19 CFR 351.203(c)(2).

ITC Notification

We will notify the ITC of our initiation, as required by section 732(d) of the Act.

Preliminary Determination by the ITC

The ITC will preliminarily determine, within 45 days after the date on which the Petition was filed, whether there is a reasonable indication that imports of stainless sheet and strip from the PRC are materially injuring or threatening material injury to a U.S. industry.[48] A negative ITC determination will result in the investigation being terminated;[49] otherwise, this investigation will proceed according to statutory and regulatory time limits.

Submission of Factual Information

Factual information is defined in 19 CFR 351.102(b)(21) as: (i) Evidence submitted in response to questionnaires; (ii) evidence submitted in support of allegations; (iii) publicly available information to value factors under 19 CFR 351.408(c) or to measure the adequacy of remuneration under 19 CFR 351.511(a)(2); (iv) evidence placed on the record by the Department; and (v) evidence other than factual information described in (i)–(iv). Any party, when submitting factual information, must specify under which subsection of 19 CFR 351.102(b)(21) the information is being submitted[50] and, if the information is submitted to rebut, clarify, or correct factual information already on the record, to provide an explanation identifying the information already on the record that the factual information seeks to rebut, clarify, or correct.[51] Time limits for the submission of factual information are addressed in 19 CFR 351.301, which provides specific time limits based on the type of factual information being submitted. Please review the regulations prior to submitting factual information in this investigation.

Extensions of Time Limits

Parties may request an extension of time limits before the expiration of a time limit established under 19 CFR 351, or as otherwise specified by the Secretary. In general, an extension request will be considered untimely if it is filed after the expiration of the time limit established under 19 CFR 351. For submissions that are due from multiple parties simultaneously, an extension request will be considered untimely if it is filed after 10:00 a.m. ET on the due date. Under certain circumstances, we may elect to specify a different time limit by which extension requests will be considered untimely for submissions which are due from multiple parties simultaneously. In such a case, we will inform parties in the letter or memorandum setting forth the deadline (including a specified time) by which extension requests must be filed to be considered timely. An extension request must be made in a separate, stand-alone submission; under limited circumstances we will grant untimely-filed requests for the extension of time limits. Please review *Extension of Time Limits; Final Rule,* 78 FR 57790 (September 20, 2013), available at *http://www.gpo.gov/fdsys/pkg/FR-2013-09-20/html/2013-22853.html,* prior to submitting factual information in this investigation.

Certification Requirements

Any party submitting factual information in an AD or CVD proceeding must certify to the accuracy and completeness of that information.[52] Parties are hereby reminded that revised certification requirements are in effect for company/government officials, as well as their representatives. Investigations initiated on the basis of petitions filed on or after August 16, 2013, and other segments of any AD or CVD proceedings initiated on or after August 16, 2013, should use the formats for the revised certifications provided at the end of the *Final Rule.*[53] The Department intends to reject factual submissions if the submitting party does

[45] *See* Policy Bulletin 05.1: Separate-Rates Practice and Application of Combination Rates in Antidumping Investigation involving Non-Market Economy Countries (April 5, 2005), available at *http://enforcement.trade.gov/policy/bull05-1.pdf* (Policy Bulletin 05.1).

[46] Although in past investigations this deadline was 60 days, consistent with 19 CFR 351.301(a), which states that ''the Secretary may request any person to submit factual information at any time during a proceeding,'' this deadline is now 30 days.

[47] *See* Policy Bulletin 05.1 at 6 (emphasis added).

[48] *See* section 733(a) of the Act.

[49] *Id.*

[50] *See* 19 CFR 351.301(b).

[51] *See* 19 CFR 351.301(b)(2).

[52] *See* section 782(b) of the Act.

[53] *See Certification of Factual Information to Import Administration during Antidumping and Countervailing Duty Proceedings,* 78 FR 42678 (July 17, 2013) (*Final Rule*); *see also* frequently asked questions regarding the *Final Rule,* available at *http://enforcement.trade.gov/tlei/notices/factual_info_final_rule_FAQ_07172013.pdf.*

not comply with applicable revised certification requirements.

Notification to Interested Parties

Interested parties must submit applications for disclosure under administrative protective order (''APO'') in accordance with 19 CFR 351.305. On January 22, 2008, the Department published *Antidumping and Countervailing Duty Proceedings: Documents Submission Procedures; APO Procedures,* 73 FR 3634 (January 22, 2008). Parties wishing to participate in this investigation should ensure that they meet the requirements of these procedures (*e.g.,* the filing of letters of appearance as discussed in 19 CFR 351.103(d)).

This notice is issued and published pursuant to section 777(i) of the Act.

Dated: March 3, 2016.

Paul Piquado,

Assistant Secretary for Enforcement and Compliance.

Appendix I

Scope of the Investigation

The merchandise covered by this investigation is stainless steel sheet and strip, whether in coils or straight lengths. Stainless steel is an alloy steel containing, by weight, 1.2 percent or less of carbon and 10.5 percent or more of chromium, with or without other elements. The subject sheet and strip is a flat-rolled product with a width that is greater than 9.5 mm and with a thickness of 0.3048 mm and greater but less than 4.75 mm, and that is annealed or otherwise heat treated, and pickled or otherwise descaled. The subject sheet and strip may also be further processed (*e.g.,* cold-rolled, annealed, tempered, polished, aluminized, coated, painted, varnished, trimmed, cut, punched, or slit, etc.) provided that it maintains the specific dimensions of sheet and strip set forth above following such processing. The products described include products regardless of shape, and include products of either rectangular or non-rectangular cross-section where such cross-section is achieved subsequent to the rolling process, *i.e.,* products which have been ''worked after rolling'' (*e.g.,* products which have been beveled or rounded at the edges).

For purposes of the width and thickness requirements referenced above: (1) Where the nominal and actual measurements vary, a product is within the scope if application of either the nominal or actual measurement would place it within the scope based on the definitions set forth above; and (2) where the width and thickness vary for a specific product (*e.g.,* the thickness of certain products with non-rectangular cross-section, the width of certain products with non-rectangular shape, etc.), the measurement at its greatest width or thickness applies.

All products that meet the written physical description, and in which the chemistry quantities do not exceed any one of the noted element levels listed above, are within the scope of this investigation unless specifically excluded.

Subject merchandise includes stainless steel sheet and strip that has been further processed in a third country, including but not limited to cold-rolling, annealing, tempering, polishing, aluminizing, coating, painting, varnishing, trimming, cutting, punching, and/or slitting, or any other processing that would not otherwise remove the merchandise from the scope of the investigation if performed in the country of manufacture of the stainless steel sheet and strip.

Excluded from the scope of this investigation are the following: (1) Sheet and strip that is not annealed or otherwise heat treated and not pickled or otherwise descaled; (2) plate (*i.e.,* flat-rolled stainless steel products of a thickness of 4.75 mm or more); and (3) flat wire (*i.e.,* cold-rolled sections, with a mill edge, rectangular in shape, of a width of not more than 9.5 mm).

The products under investigation are currently classifiable under Harmonized Tariff Schedule of the United States (HTSUS) subheadings 7219.13.0031, 7219.13.0051, 7219.13.0071, 7219.13.0081, 7219.14.0030, 7219.14.0065, 7219.14.0090, 7219.23.0030, 7219.23.0060, 7219.24.0030, 7219.24.0060, 7219.32.0005, 7219.32.0020, 7219.32.0025, 7219.32.0035, 7219.32.0036, 7219.32.0038, 7219.32.0042, 7219.32.0044, 7219.32.0045, 7219.32.0060, 7219.33.0005, 7219.33.0020, 7219.33.0025, 7219.33.0035, 7219.33.0036, 7219.33.0038, 7219.33.0042, 7219.33.0044, 7219.33.0045, 7219.33.0070, 7219.33.0080, 7219.34.0005, 7219.34.0020, 7219.34.0025, 7219.34.0030, 7219.34.0035, 7219.34.0050, 7219.35.0005, 7219.35.0015, 7219.35.0030, 7219.35.0035, 7219.35.0050, 7219.90.0010, 7219.90.0020, 7219.90.0025, 7219.90.0060, 7219.90.0080, 7220.12.1000, 7220.12.5000, 7220.20.1010, 7220.20.1015, 7220.20.1060, 7220.20.1080, 7220.20.6005, 7220.20.6010, 7220.20.6015, 7220.20.6060, 7220.20.6080, 7220.20.7005, 7220.20.7010, 7220.20.7015, 7220.20.7060, 7220.20.7080, 7220.90.0010, 7220.90.0015, 7220.90.0060, and 7220.90.0080. Although the HTSUS subheadings are provided for convenience and customs purposes, the written description of the scope of this proceeding is dispositive.

[FR Doc. 2016–05405 Filed 3–9–16; 8:45 am]

BILLING CODE 3510–DS–P

DEPARTMENT OF COMMERCE

National Oceanic and Atmospheric Administration

Notice of Public Comment Period; National Estuarine Research Reserve System

AGENCY: Stewardship Division, Office for Coastal Management, National Ocean Service, National Oceanic and Atmospheric Administration, U.S. Department of Commerce.

ACTION: Notice of Public Comment Period for the Padilla Bay, Washington National Estuarine Research Reserve Management Plan revision.

SUMMARY: Notice is hereby given that the Stewardship Division, Office for Coastal Management, National Ocean Service, National Oceanic and Atmospheric Administration, U.S. Department of Commerce is announcing a thirty (30) day public comment period for the revised Management Plan for Padilla Bay, Washington National Estuarine Research Reserve Management Plan revision. In accordance with 15 CFR 921.33(c), the Padilla Bay Reserve revised its Management Plan, which will replace the plan previously approved in 2008.

The revised Management Plan outlines the administrative structure; the research/monitoring, stewardship, education, and training programs of the Reserve; and the plans for future land acquisition and facility development to support Reserve operations.

The Padilla Bay Reserve takes an integrated approach to management, linking research, education, coastal training, and stewardship functions. The Reserve has outlined how it will manage administration and its core program providing detailed actions that will enable it to accomplish specific goals and objectives. Since the last Management Plan, the Reserve has built out its core programs and monitoring infrastructure; conducted an educational market analysis and needs assessment to better meet teacher needs and underserved audiences; developed a Reserve Disaster Response Plan; and improved public access to the Reserve through construction of a new boat launch ramp and enhanced trails.

Since the last management plan was approved in 2008, the Padilla Bay Reserve has acquired an additional 110 acres of tidelands inside the Reserve boundary. With the approval of this management plan, the Padilla Bay Reserve will increase their total acreage to 11,966. The change is attributable to the recent acquisitions of several parcels by Reserve state agency, totaling 110 acres. All of the proposed additions are owned by the Washington Department of Ecology and will be managed for long-term protection and conservation value. These parcels have high ecological value and will enhance the Reserve's ability to provide increased opportunities for research, education, and stewardship. The revised Management Plan will serve as the guiding document for the expanded 11,966 acre Padilla Bay Reserve.

View the Padilla Bay, Washington Reserve Management Plan revision at *www.padillabay.gov/publications.asp*

and provide comments to Sharon Riggs, *sriggs@padillabay.gov.*

FOR FURTHER INFORMATION CONTACT: Bree Turner at (206) 526–4641 or Erica Seiden at (301) 563–1172 of NOAA's National Ocean Service, Stewardship Division, Office for Coastal Management, 1305 East-West Highway, N/ORM5, 10th Floor, Silver Spring, MD 20910.

Dated: March 1, 2016.

John King,

Deputy Director, Office for Coastal Management, National Ocean Service, National Oceanic and Atmospheric Administration.

[FR Doc. 2016–05367 Filed 3–9–16; 8:45 am]

BILLING CODE 3510–08–P

DEPARTMENT OF COMMERCE

National Oceanic and Atmospheric Administration

RIN 0648–XE487

Fisheries of the South Atlantic; South Atlantic Fishery Management Council (Council)—Snapper Grouper Advisory Panel Meeting

AGENCY: National Marine Fisheries Service (NMFS), National Oceanic and Atmospheric Administration (NOAA), Commerce.

ACTION: Meeting of the South Atlantic Fishery Management Councils *Snapper Grouper* Advisory Panel (AP).

SUMMARY: The South Atlantic Fishery Management Council (SAFMC) will hold a meeting of its *Snapper Grouper* AP in North Charleston, South Carolina.

DATES: The meeting will begin at 9 a.m. on Tuesday, April 26, 2016, and end at 3 p.m. on Wednesday, April 27, 2016, to view the agenda, see **SUPPLEMENTARY INFORMATION.**

ADDRESSES: The meeting will be held at the Crowne Plaza Hotel, 4831 Tanger Outlet Blvd., North Charleston, SC 29418; phone 877/227–6963 or 843/744–4422; fax 843/744–4472.

Council address: South Atlantic Fishery Management Council, 4055 Faber Place Drive, Suite 201, N. Charleston, SC 29405.

FOR FURTHER INFORMATION CONTACT: Kim Iverson, Public Information Officer, SAFMC; phone 843/571–4366 or toll free 866/SAFMC–10; FAX 843/769–4520; email: *kim.iverson@safmc.net.*

SUPPLEMENTARY INFORMATION:

Agenda

The items of discussion in the meeting agenda are as follows:

1. The AP will receive updates on the status of fishery management plan amendments under development and recently implemented and stock assessments underway for four species in the *snapper grouper* management complex.
2. The AP will review and provide recommendations as appropriate on the following amendments currently under development:
   a. Amendment 37 to the *Snapper Grouper* Fishery Management Plan addressing the management of *hogfish;*
   b. Amendment 41 to the *Snapper Grouper* Fishery Management Plan addressing management measures for *mutton snapper;* and
   c. For-Hire Electronic Reporting Amendment.
3. The AP will receive updates on the draft Allocations Amendment (for *yellowtail snapper*) and a draft amendment resulting from Visioning Project.
4. The AP will receive an update on the January 2016 Citizen Science Workshop.
5. The AP will elect a new chair and vice-chair.

Special Accommodations

This meeting is physically accessible to people with disabilities. Requests for auxiliary aids should be directed to the council office (see **ADDRESSES**) 3 days prior to the meeting.

Note: The times and sequence specified in this agenda are subject to change.

Authority: 16 U.S.C. 1801 *et seq.*

Dated: March 7, 2016.

Tracey L. Thompson,

Acting Director, Office of Sustainable Fisheries, National Marine Fisheries Service.

[FR Doc. 2016–05374 Filed 3–9–16; 8:45 am]

BILLING CODE 3510–22–P

DEPARTMENT OF COMMERCE

National Oceanic and Atmospheric Administration

Proposed Information Collection; Comment Request; NOAA's Teacher at Sea Program

AGENCY: National Oceanic and Atmospheric Administration (NOAA), Commerce.

ACTION: Notice.

SUMMARY: The Department of Commerce, as part of its continuing effort to reduce paperwork and respondent burden, invites the general public and other Federal agencies to take this opportunity to comment on proposed and/or continuing information collections, as required by the Paperwork Reduction Act of 1995.

DATES: Written comments must be submitted on or before May 9, 2016.

ADDRESSES: Direct all written comments to Jennifer Jessup, Departmental Paperwork Clearance Officer, Department of Commerce, Room 6616, 14th and Constitution Avenue NW., Washington, DC 20230 (or via the Internet at *JJessup@doc.gov*).

FOR FURTHER INFORMATION CONTACT: Requests for additional information or copies of the information collection instrument and instructions should be directed to Jennifer Hammond, (301) 427–8039, or *jennifer.hammond@noaa.gov.*

SUPPLEMENTARY INFORMATION:

I. Abstract

This request is for extension of a currently approved collection.

NOAA provides educators an opportunity to gain first-hand experience with field research activities through the NOAA Teacher at Sea Program. Through this program, educators spend up to 4 weeks at sea on a NOAA research vessel, participating in an on-going research project with NOAA scientists. The application solicits information from interested educators: basic personal information, teaching experience and ideas for applying program experience in their classrooms, plus two recommendations and a NOAA Health Services Questionnaire required of anyone selected to participate in the program. Once educators are selected and participate on a cruise, they write a report detailing the events of the cruise and ideas for classroom activities based on what they learned while at sea. These materials are then made available to other educators so they may benefit from the experience, without actually going to sea themselves. NOAA does not collect information from this universe of respondents for any other purpose.

II. Method of Collection

Forms can be completed on line and submitted electronically, and/or printed and mailed.

III. Data

OMB Control Number: 0648–0283.

Form Number(s): None.

Type of Review: Regular (extension of a currently approved collection).

Affected Public: Individuals or households.

Estimated Number of Respondents: 375.

Estimated Time per Response: 45 minutes to read and complete

application, 15 minutes to complete a Health Services Questionnaire, 15 minutes to deliver and discuss recommendation forms to persons from whom recommendations are being requested, 15 minutes for those persons to complete a recommendation form, and 2 hours for a follow-up report.

Estimated Total Annual Burden Hours: 309.

Estimated Total Annual Cost to Public: $221 in reporting/recordkeeping costs.

IV. Request for Comments

Comments are invited on: (a) Whether the proposed collection of information is necessary for the proper performance of the functions of the agency, including whether the information shall have practical utility; (b) the accuracy of the agency's estimate of the burden (including hours and cost) of the proposed collection of information; (c) ways to enhance the quality, utility, and clarity of the information to be collected; and (d) ways to minimize the burden of the collection of information on respondents, including through the use of automated collection techniques or other forms of information technology.

Comments submitted in response to this notice will be summarized and/or included in the request for OMB approval of this information collection; they also will become a matter of public record.

Dated: February 18, 2016.

Sarah Brabson,

NOAA PRA Clearance Officer.

[FR Doc. 2016–05361 Filed 3–9–16; 8:45 am]

BILLING CODE 3510–22–P

DEPARTMENT OF COMMERCE

National Oceanic and Atmospheric Administration

Sanctuary System Business Advisory Council: Public Meeting

AGENCY: Office of National Marine Sanctuaries (ONMS), National Ocean Service (NOS), National Oceanic and Atmospheric Administration (NOAA), Department of Commerce (DOC).

ACTION: Notice of open meeting.

SUMMARY: Notice is hereby given of a meeting via web conference call of the Sanctuary System Business Advisory Council (Council). The web conference call is open to the public, and participants can dial into the call. Participants who choose to use the web conferencing feature in addition to the audio will be able to view the presentations as they are being given.

DATES: Members of the public wishing to participate in the meeting must register in advance by March 22, 2016. The meeting will be held Wednesday, March 23, 2016, from 3:00 p.m. to 5:00 p.m. ET, and an opportunity for public comment will be provided at 4:30 p.m. ET. These times and the agenda topics described below are subject to change.

ADDRESSES: The meeting will be held via web conference call. Register by contacting Rebecca Holyoke at *rebecca.holyoke@noaa.gov* or (240) 533–0685. Webinar and teleconference capacity may be limited.

FOR FURTHER INFORMATION CONTACT: Rebecca Holyoke, Office of National Marine Sanctuaries, 1305 East West Highway, Silver Spring, Maryland 20910. (Phone: 240–533–0685, Fax: 301–713–0404; email: *rebecca.holyoke@noaa.gov*).

SUPPLEMENTARY INFORMATION: ONMS serves as the trustee for 14 marine protected areas encompassing more than 170,000 square miles of ocean and Great Lakes waters from the Hawaiian Islands to the Florida Keys, and from Lake Huron to American Samoa. National marine sanctuaries protect our Nation's most vital coastal and marine natural and cultural resources, and through active research, management, and public engagement, sustains healthy environments that are the foundation for thriving communities and stable economies. One of the many ways ONMS ensures public participation in the designation and management of national marine sanctuaries is through the formation of advisory councils. The Sanctuary System Business Advisory Council (Council) has been formed to provide advice and recommendations to the Director regarding the relationship of the ONMS with the business community. Additional information on the Council can be found at *http://sanctuaries.noaa.gov/management/ac/.*

Matters to Be Considered: This meeting of the Council will provide an opportunity for council representatives to hear about ONMS interest in developing a business plan that analyzes the work conducted within the National Marine Sanctuary System and identifies the gaps between what ONMS wants to accomplish and the resources and opportunities available to it. Council representatives will be asked to provide their perspective on the utility of this type of plan as well as its content, structure, and format. The agenda is subject to change. The agenda is available at *http://sanctuaries.noaa.gov/management/bac/meetings.html.*

Authority: 16 U.S.C. 1431, *et seq.*

Number 11.429 Marine Sanctuary Program)

Dated: March 3, 2016.

John Armor,

Acting Director, Office of National Marine Sanctuaries, National Ocean Service, National Oceanic and Atmospheric Administration.

[FR Doc. 2016–05444 Filed 3–8–16; 11:15 am]

BILLING CODE 3510–NK–P

COMMITTEE FOR PURCHASE FROM PEOPLE WHO ARE BLIND OR SEVERELY DISABLED

Appointments to Performance Review Board for Senior Executive Service

AGENCY: Committee for Purchase from People Who Are Blind or Severely Disabled.

ACTION: Appointment of Performance Review Board for Senior Executive Service.

SUMMARY: The Committee For Purchase from People Who Are Blind Or Severely Disabled (Committee) has announced appointments to the Committee Performance Review Board.

ADDRESSES: Committee for Purchase From People Who Are Blind or Severely Disabled, 1401 S. Clark Street, Suite 715, Arlington, Virginia 22202–4149.

For Further Information or to Submit Comments Contact: Barry S. Lineback, Telephone: (703) 603–7740, Fax: (703) 603–0655, or email *CMTEFedReg@AbilityOne.gov.*

SUPPLEMENTARY INFORMATION: All appointments are made pursuant to Section 4314 of Chapter 43 of Title 5 of the United States Code.

Appointments

The following individuals are appointed as members of the Committee Performance Review Board responsible for making recommendations to the appointing and awarding authorities on performance appraisal ratings and performance awards for Senior Executive Service employees:

Harry P. Hallock, Deputy Assistant Secretary (Procurement), Department of the Army

J. Anthony Poleo, Director, DLA Finance, Chief Financial Officer, Defense Logistics Agency

Lisa Wilusz, Director, Office of Procurement and Property Management, Department of Agriculture

DATES: *Effective Date:* March 7, 2016.

FOR FURTHER INFORMATION CONTACT: Barry S. Lineback, Telephone: (703) 603–7740, Fax: (703) 603–0655, or email *CMTEFedReg@abilityone.gov.*

Barry S. Lineback,

Director, Business Operations.

[FR Doc. 2016–05357 Filed 3–9–16; 8:45 am]

BILLING CODE 6353–01–P

CORPORATION FOR NATIONAL AND COMMUNITY SERVICE

Proposed Information Collection; Comment Request

AGENCY: Corporation for National and Community Service.

ACTION: Notice.

SUMMARY: The Corporation for National and Community Service (CNCS), as part of its continuing effort to reduce paperwork and respondent burden, conducts a pre-clearance consultation program to provide the general public and federal agencies with an opportunity to comment on proposed and/or continuing collections of information in accordance with the Paperwork Reduction Act of 1995 (PRA95) (44 U.S.C. Sec. 3506(c)(2)(A)). This program helps to ensure that requested data can be provided in the desired format, reporting burden (time and financial resources) is minimized, collection instruments are clearly understood, and the impact of collection requirement on respondents can be properly assessed.

Currently, CNCS is soliciting comments concerning its proposed renewal of the AmeriCorps Interest Payment Form/AmeriCorps—Manual Interest Payment Request Form (OMB#3045–0053). The AmeriCorps Interest Payment Form/AmeriCorps—Manual Interest Payment Request Form (OMB#3045–0053) is used to pay all or a portion of the interest that accrues on a member's qualified student loan during their service period, if their loans were in forbearance and if they successfully completed their term of service. This payment is in addition to the education award. The intention is to keep the qualified student loan debt of members from increasing as a result of their national service. The percentage of accrued interest CNCS pays is determined by a formula based on the member's term of service.

Copies of the information collection request can be obtained by contacting the office listed in the **ADDRESSES** section of this Notice.

DATES: Written comments must be submitted to the individual and office listed in the **ADDRESSES** section by May 9, 2016.

ADDRESSES: You may submit comments, identified by the title of the information collection activity, by any of the following methods:

(1) *By mail sent to:* Corporation for National and Community Service, National Service Trust; Attention: Nahid Jarrett, Trust Officer, 250 E Street SW., Suite 300, Washington, DC 20525.

(2) By hand delivery or by courier to the CNCS mailroom at the mail address given in paragraph (1) above, between 9:00 a.m. and 4:00 p.m. Eastern Time, Monday through Friday, except Federal holidays.

(3) *By fax to:* 202–606–3484, Attention: Nahid Jarrett.

(4) *Electronically* through *www.regulations.gov.*

Individuals who use a telecommunications device for the deaf (TTY–TDD) may call 1–800–833–3722 between 8:00 a.m. and 8:00 p.m. Eastern Time, Monday through Friday.

FOR FURTHER INFORMATION CONTACT: Nahid Jarrett, 202–606–6753, or by email at *njarrett@cns.gov.*

SUPPLEMENTARY INFORMATION:

CNCS is particularly interested in comments that:

- Evaluate whether the proposed collection of information is necessary for the proper performance of the functions of CNCS, including whether the information will have practical utility;
- Evaluate the accuracy of the agency's estimate of the burden of the proposed collection of information, including the validity of the methodology and assumptions used;
- Enhance the quality, utility, and clarity of the information to be collected; and
- Minimize the burden of the collection of information on those who are expected to respond, including the use of appropriate automated, electronic, mechanical, or other technological collection techniques or other forms of information technology (*e.g.,* permitting electronic submissions of responses).

Background

CNCS supports programs that provide opportunities for individuals who want to become involved in national service. The service opportunities cover a wide range of activities over varying periods of time. Upon successfully completing an agreed-upon term of service in an approved AmeriCorps program, an AmeriCorps member receives an education award.

Current Action

CNCS seeks to renew the current information collection request. After an AmeriCorps member completes a period of national and community service, the individual receives an education award that can be used to pay against qualified student loans or pay for current post-secondary educational expenses. AmeriCorps members use the *AmeriCorps Interest Payment Form/AmeriCorps—Manual Interest Payment Request Form* to request a payment of accrued interest on qualified student loans and to authorize the release of loan information to the National Service Trust; schools and lenders verify eligibility for the payments; and both parties verify certain legal requirements.

The information collection will otherwise be used in the same manner as the existing form. CNCS also seeks to continue using the current form until the revised form is approved by OMB. The current application is due to expire on March 31, 2016.

Type of Review: Renewal.

Agency: CNCS.

Title: AmeriCorps Interest Payment Form.

OMB Number: 3045–0053.

Agency Number: None.

Affected Public: AmeriCorps Members/Alum that have completed a term of national service who seek to have the interest that has accrued on their qualified student loans during their service term repaid and qualified loan servicers.

Total Respondents: 13,200.

Frequency: One or more per education award.

Average Time Per Response: Averages 5 minutes.

Estimated Total Burden Hours: 1,100.

Total Burden Cost (capital/startup): None.

Total Burden Cost (operating/maintenance): None.

Comments submitted in response to this notice will be summarized and/or included in the request for Office of Management and Budget approval of the information collection request; they will also become a matter of public record.

Dated: March 4, 2016.

Maggie Taylor-Coates,

Chief of Trust Operations.

[FR Doc. 2016–05349 Filed 3–9–16; 8:45 am]

BILLING CODE 6050–28–P

CORPORATION FOR NATIONAL AND COMMUNITY SERVICE

Proposed Information Collection; Comment Request

AGENCY: CNCS.

ACTION: Notice.

SUMMARY: The Corporation for National and Community Service (CNCS), as part of its continuing effort to reduce paperwork and respondent burden, conducts a pre-clearance consultation program to provide the general public and federal agencies with an opportunity to comment on proposed and/or continuing collections of information in accordance with the Paperwork Reduction Act of 1995 (PRA95) (44 U.S.C. Sec. 3506(c)(2)(A)). This program helps to ensure that requested data can be provided in the desired format, reporting burden (time and financial resources) is minimized, collection instruments are clearly understood, and the impact of collection requirement on respondents can be properly assessed.

Currently, CNCS is soliciting comments concerning its proposed renewal of the CNCS Forbearance Request for National Service Form (OMB#3045–0030). The CNCS Forbearance Request for National Service Form (OMB#3045–0030) is used to certify that AmeriCorps members are eligible for forbearance based on their enrollment in a national service position. AmeriCorps members use the form to request forbearance.

Copies of the information collection request can be obtained by contacting the office listed in the **ADDRESSES** section of this Notice.

DATES: Written comments must be submitted to the individual and office listed in the **ADDRESSES** section by May 9, 2016.

ADDRESSES: You may submit comments, identified by the title of the information collection activity, by any of the following methods:

(1) By mail sent to: Corporation for National and Community Service, National Service Trust; Attention: Nahid Jarrett, Trust Officer, 250 E Street SW., Suite 300, Washington, DC 20525.

(2) By hand delivery or by courier to the CNCS mailroom at the mail address given in paragraph (1) above, between 9:00 a.m. and 4:00 p.m. Eastern Time, Monday through Friday, except Federal holidays.

(3) By fax to: 202–606–3484, Attention: Nahid Jarrett.

(4) Electronically through *www.regulations.gov.*

Individuals who use a telecommunications device for the deaf (TTY–TDD) may call 1–800–833–3722 between 8:00 a.m. and 8:00 p.m. Eastern Time, Monday through Friday.

FOR FURTHER INFORMATION CONTACT: Nahid Jarrett, 202–606–6753, or by email at *njarrett@cns.gov.*

SUPPLEMENTARY INFORMATION: CNCS is particularly interested in comments that:

- Evaluate whether the proposed collection of information is necessary for the proper performance of the functions of CNCS, including whether the information will have practical utility;
- Evaluate the accuracy of the agency's estimate of the burden of the proposed collection of information, including the validity of the methodology and assumptions used;
- Enhance the quality, utility, and clarity of the information to be collected; and
- Minimize the burden of the collection of information on those who are expected to respond, including the use of appropriate automated, electronic, mechanical, or other technological collection techniques or other forms of information technology (*e.g.,* permitting electronic submissions of responses).

Background

CNCS supports programs that provide opportunities for individuals who want to become involved in national service. The service opportunities cover a wide range of activities over varying periods of time. Upon successfully completing an agreed-upon term of service in an approved AmeriCorps program, an AmeriCorps member receives an education award.

Current Action

CNCS seeks to renew the current information collection request *CNCS Forbearance Request for National Service Form,* which certifies that AmeriCorps members are eligible for forbearance based on their enrollment in a national service position. AmeriCorps members use the form to request forbearance from their loan servicer.

CNCS also seeks to continue using the current form until the revised application is approved by OMB. The current application is due to expire on March 31, 2016.

Type of Review: Renewal.

Agency: CNCS.

Title: CNCS Forbearance Request for National Service Form.

OMB Number: 3045–0030.

Agency Number: None.

Affected Public: AmeriCorps members and alumni that wish to request forbearance on qualified student loans and qualified loan servicers.

Total Respondents: 69,300.

Frequency: One or more per education award.

Average Time per Response: Averages 5 minutes.

Estimated Total Burden Hours: 5,775.

Total Burden Cost (capital/startup): None.

Total Burden Cost (operating/maintenance): None.

Comments submitted in response to this notice will be summarized and/or included in the request for Office of Management and Budget approval of the information collection request; they will also become a matter of public record.

Dated: March 4, 2016.

Maggie Taylor-Coates,

Chief of Trust Operations.

[FR Doc. 2016–05348 Filed 3–9–16; 8:45 am]

BILLING CODE 6050–28–P

COUNCIL OF THE INSPECTORS GENERAL ON INTEGRITY AND EFFICIENCY

No FEAR Act Notice

AGENCY: Council of the Inspectors General on Integrity and Efficiency.

ACTION: Notice.

SUMMARY: The Council of the Inspectors General on Integrity and Efficiency (CIGIE) is providing notice to its employees, former employees, and applicants for CIGIE employment about the rights and remedies available to them under the Federal antidiscrimination, whistleblower protection, and retaliation laws. This notice constitutes CIGIE's initial notification pursuant to the Notification and Federal Employee Antidiscrimination and Retaliation Act of 2002 (No FEAR Act or Act), as implemented by Office of Personnel Management regulations. See 5 CFR part 724.

FOR FURTHER INFORMATION CONTACT: Atticus J. Reaser, General Counsel, CIGIE, (202) 292–2600.

SUPPLEMENTARY INFORMATION: On May 15, 2002, Congress enacted the ''Notification and Federal Employee Antidiscrimination and Retaliation Act of 2002,'' which is now known as the No FEAR Act. One purpose of the Act is to ''require that Federal agencies be accountable for violations of antidiscrimination and whistleblower protection laws.'' Public Law 107–174, Summary. In support of this purpose, Congress found that ''agencies cannot be run effectively if those agencies practice or tolerate discrimination.'' Public Law 107–174, Title I, General Provisions, section 101(1).

The Act also requires this agency to provide this notice to Federal employees, former Federal employees and applicants for Federal employment

to inform you of the rights and protections available to you under Federal antidiscrimination and whistleblower protection laws.

Antidiscrimination Laws

A Federal agency cannot discriminate against an employee or applicant with respect to the terms, conditions or privileges of employment on the basis of race, color, religion, sex, national origin, age, disability, marital status or political affiliation. Discrimination on these bases is prohibited by one or more of the following statutes: 5 U.S.C. 2302(b)(1), 29 U.S.C. 206(d), 29 U.S.C. 631, 29 U.S.C. 633a, 29 U.S.C. 791 and 42 U.S.C. 2000e–16.

If you believe that you have been the victim of unlawful discrimination on the basis of race, color, religion, sex, national origin or disability, you must contact an Equal Employment Opportunity (EEO) counselor within 45 calendar days of the alleged discriminatory action, or, in the case of a personnel action, within 45 calendar days of the effective date of the action, before you can file a formal complaint of discrimination with your agency. See, *e.g.,* 29 CFR 1614. If you believe that you have been the victim of unlawful discrimination on the basis of age, you must either contact an EEO counselor as noted above or give notice of intent to sue to the Equal Employment Opportunity Commission (EEOC) within 180 calendar days of the alleged discriminatory action. If you are alleging discrimination based on marital status or political affiliation, you may file a written complaint with the U.S. Office of Special Counsel (OSC) (see contact information below). In the alternative (or in some cases, in addition), you may pursue a discrimination complaint by filing a grievance through your agency's administrative or negotiated grievance procedures, if such procedures apply and are available.

Whistleblower Protection Laws

A Federal employee with authority to take, direct others to take, recommend or approve any personnel action must not use that authority to take or fail to take, or threaten to take or fail to take, a personnel action against an employee or applicant because of disclosure of information by that individual that is reasonably believed to evidence violations of law, rule or regulation; gross mismanagement; gross waste of funds; an abuse of authority; or a substantial and specific danger to public health or safety, unless disclosure of such information is specifically prohibited by law and such information is specifically required by Executive order to be kept secret in the interest of national defense or the conduct of foreign affairs.

Retaliation against an employee or applicant for making a protected disclosure is prohibited by 5 U.S.C. 2302(b)(8). If you believe that you have been the victim of whistleblower retaliation, you may file a written complaint (Form OSC–11) with the U.S. Office of Special Counsel at 1730 M Street, NW., Suite 218, Washington, DC 20036–4505 or online through the OSC Web site—*http://www.osc.gov.*

Retaliation for Engaging in Protected Activity

A Federal agency cannot retaliate against an employee or applicant because that individual exercises his or her rights under any of the Federal antidiscrimination or whistleblower protection laws listed above. If you believe that you are the victim of retaliation for engaging in protected activity, you must follow, as appropriate, the procedures described in the Antidiscrimination Laws and Whistleblower Protection Laws sections or, if applicable, the administrative or negotiated grievance procedures in order to pursue any legal remedy.

Disciplinary Actions

Under the existing laws, each agency retains the right, where appropriate, to discipline a Federal employee for conduct that is inconsistent with Federal Antidiscrimination and Whistleblower Protection Laws up to and including removal. If OSC has initiated an investigation under 5 U.S.C. 1214, however, agencies must seek approval from OSC to discipline employees for, among other activities, engaging in prohibited retaliation. Nothing in the No FEAR Act alters existing laws or permits an agency to take unfounded disciplinary action against a Federal employee or to violate the procedural rights of a Federal employee who has been accused of discrimination.

Additional Information

For further information regarding the No FEAR Act regulations, refer to 5 CFR part 724, as well as the appropriate offices within your agency (*e.g.,* EEO/civil rights office, human resources office or legal office). Additional information regarding Federal antidiscrimination, whistleblower protection and retaliation laws can be found at the EEOC Web site—*http://www.eeoc.gov* and the OSC Web site—*http://www.osc.gov.*

Existing Rights Unchanged

Pursuant to section 205 of the No FEAR Act, neither the Act nor this notice creates, expands or reduces any rights otherwise available to any employee, former employee or applicant under the laws of the United States, including the provisions of law specified in 5 U.S.C. 2302(d).

Dated: March 4, 2016.

Mark D. Jones,

Executive Director, Council of the Inspectors General on Integrity and Efficiency.

[FR Doc. 2016–05421 Filed 3–9–16; 8:45 am]

BILLING CODE 6820–C9–P

DEPARTMENT OF DEFENSE

Department of the Army

[Docket ID: USA–2015–HQ–0039]

Submission for OMB Review; Comment Request

ACTION: Notice.

SUMMARY: The Department of Defense has submitted to OMB for clearance, the following proposal for collection of information under the provisions of the Paperwork Reduction Act.

DATES: Consideration will be given to all comments received by April 11, 2016.

FOR FURTHER INFORMATION CONTACT: Fred Licari, 571–372–0493.

SUPPLEMENTARY INFORMATION:

Title, Associated Form and OMB Number: Department of Defense Standard Tender of Freight Services; SDDC Form 364–R; OMB Control Number 0704–0261.

Type of Request: Reinstatement, without change, of a previously approved collection for which approval has expired.

Number of Respondents: 170,825.

Responses per Respondent: 1.

Annual Responses: 170,825.

Average Burden per Response: 20 minutes.

Annual Burden Hours: 56,372.25.

Needs and Uses: The information derived from the DoD tenders on file with the Military Service Deployment and Distribution Command (SDDC) is used by SDDC subordinate commands and DoD shippers to select the best value carriers to transport surface freight shipments. Freight carriers furnish information in a uniform format so that the Government can determine the cost of transportation, accessorial, and security services, and select the best value carriers for 1.1 million Bill of Lading shipments annually. The DoD tender is the source document for the

General Services Administration post-shipment audit or carrier freight bills.

Affected Public: Business or other for-profit.

Frequency: On occasion.

Respondent's Obligation: Required to obtain or retain benefits.

OMB Desk Officer: Ms. Jasmeet Seehra.

Comments and recommendations on the proposed information collection should be emailed to Ms. Jasmeet Seehra, DoD Desk Officer, at *Oira_submission@omb.eop.gov.* Please identify the proposed information collection by DoD Desk Officer and the Docket ID number and title of the information collection.

You may also submit comments and recommendations, identified by Docket ID number and title, by the following method:

• Federal eRulemaking Portal: *http://www.regulations.gov.* Follow the instructions for submitting comments.

Instructions: All submissions received must include the agency name, Docket ID number and title for this **Federal Register** document. The general policy for comments and other submissions from members of the public is to make these submissions available for public viewing on the Internet at *http://www.regulations.gov* as they are received without change, including any personal identifiers or contact information.

DOD Clearance Officer: Mr. Frederick Licari.

Written requests for copies of the information collection proposal should be sent to Mr. Licari at WHS/ESD Directives Division, 4800 Mark Center Drive, East Tower, Suite 02G09, Alexandria, VA 22350–3100.

Dated: March 7, 2016.

Aaron Siegel,

Alternate OSD Federal Register Liaison Officer, Department of Defense.

[FR Doc. 2016–05363 Filed 3–9–16; 8:45 am]

BILLING CODE 5001–06–P

DEPARTMENT OF DEFENSE

Office of the Secretary

Uniform Formulary Beneficiary Advisory Panel; Notice of Federal Advisory Committee Meeting

AGENCY: Assistant Secretary of Defense (Health Affairs), DoD.

ACTION: Notice of meeting.

SUMMARY: The Department of Defense is publishing this notice to announce a Federal Advisory Committee meeting of the Uniform Formulary Beneficiary Advisory Panel (hereafter referred to as the Panel).

DATES: Wednesday, April 6, 2016, from 9:00 a.m. to 12:00 p.m.

ADDRESSES: Naval Heritage Center Theater, 701 Pennsylvania Avenue NW., Washington, DC 20004.

FOR FURTHER INFORMATION CONTACT: CAPT Edward Norton, DFO, Uniform Formulary Beneficiary Advisory Panel, 7700 Arlington Boulevard, Suite 5101, Falls Church, VA 22042–5101. Telephone: (703) 681–2890. Fax: (703) 681–1940. Email Address: *dha.ncr.health-it.mbx.baprequests@mail.mil.*

SUPPLEMENTARY INFORMATION: This meeting is being held under the provisions of the Federal Advisory Committee Act of 1972 (Title 5, United States Code (U.S.C.), Appendix, as amended) and the Government in the Sunshine Act of 1976 (5 U.S.C. 552b, as amended).

Purpose of Meeting: The Panel will review and comment on recommendations made to the Director of Defense Health Agency, by the Pharmacy and Therapeutics Committee, regarding the Uniform Formulary.

Meeting Agenda

1. Sign-In
2. Welcome and Opening Remarks
3. Public Citizen Comments
4. Scheduled Therapeutic Class Reviews (Comments will follow each agenda item)
   a. Oral Contraceptives
   b. Antifungal Agents—Subclass—Topical Lacquers
   c. Ophthalmic Anti-Inflammatory/Immunomodulatory Agents: Ophthalmic Immunomodulatory Agent
5. Designated Newly Approved Drugs in Already-Reviewed Classes
6. Designated Newly FDA Approved Drugs
7. Pertinent Utilization Management Issues
8. Panel Discussions and Vote

Meeting Accessibility: Pursuant to 5 U.S.C. 552b, as amended, and 41 Code of Federal Regulations (CFR) 102–3.140 through 102–3.165, and the availability of space, this meeting is open to the public. Seating is limited and will be provided only to the first 220 people signing-in. All persons must sign-in legibly.

Administrative Work Meeting: Prior to the public meeting, the Panel will conduct an Administrative Work Meeting from 8:30 a.m. to 9:00 a.m. to discuss administrative matters of the Panel. The Administrative Work Meeting will be held at the Naval Heritage Center, 701 Pennsylvania Avenue NW., Washington, DC 20004. Pursuant to 41 CFR 102–3.160, the Administrative Work Meeting will be closed to the public.

Written Statements: Pursuant to 41 CFR 102–3.140, the public or interested organizations may submit written statements to the membership of the Panel at any time or in response to the stated agenda of a planned meeting. Written statements should be submitted to the Panel's Designated Federal Officer (DFO). The DFO's contact information can be obtained from the General Services Administration's Federal Advisory Committee Act Database at *http://facadatabase.gov/.*

Written statements that do not pertain to the scheduled meeting of the Panel may be submitted at any time. However, if individual comments pertain to a specific topic being discussed at a planned meeting, then these statements must be submitted no later than 5 business days prior to the meeting in question. The DFO will review all submitted written statements and provide copies to all the committee members.

Public Comments: In addition to written statements, the Panel will set aside 1 hour for individuals or interested groups to address the Panel. To ensure consideration of their comments, individuals and interested groups should submit written statements as outlined in this notice; but if they still want to address the Panel, then they will be afforded the opportunity to register to address the Panel. The Panel's DFO will have a ''Sign-Up Roster'' available at the Panel meeting for registration on a first-come, first-serve basis. Those wishing to address the Panel will be given no more than 5 minutes to present their comments, and at the end of the 1-hour time period, no further public comments will be accepted. Anyone who signs-up to address the Panel, but is unable to do so due to the time limitation, may submit their comments in writing; however, they must understand that their written comments may not be reviewed prior to the Panel's deliberation.

To ensure timeliness of comments for the official record, the Panel encourages that individuals and interested groups consider submitting written statements instead of addressing the Panel.

Dated: March 7, 2016.

Aaron Siegel,

Alternate OSD Federal Register Liaison Officer, Department of Defense.

[FR Doc. 2016–05381 Filed 3–9–16; 8:45 am]

BILLING CODE 5001–06–P

DEPARTMENT OF DEFENSE

Department of the Navy

Meeting of the Board of Advisors (BOA) to The President of the Naval War College (NWC) Subcommittee

AGENCY: Department of the Navy, DoD.

ACTION: Notice.

SUMMARY: Pursuant to the provisions of The Federal Advisory Committee Act (Pub. L. 92–463, as amended), notice is hereby given that the following meeting of the Board of Advisors to the President of the Naval War College will be held. This meeting will be open to the public.

DATES: The meeting will be held on Friday, April 8, 2016 from 8:00 a.m. to 4:00 p.m. Eastern Time Zone.

ADDRESSES: The meeting will be held at the U.S. Naval War College, 686 Cushing Road, Newport, RI.

FOR FURTHER INFORMATION CONTACT: Ms. Jaye Panza, Designated Federal Official, 1 University Circle, Code 00G, Monterey, CA, 93943–5001, telephone number 831–656–2514.

SUPPLEMENTARY INFORMATION: The purpose of the Board is to advise and assist the President, NWC, in educational and support areas, providing independent advice and recommendations on items such as, but not limited to, organizational management, curricula, methods of instruction, facilities, and other matters of interest. The agenda is as follows:

0800–0830 Welcome and Morning Refreshments
0830–1000 College Update w/Deans Part
1015–1130 S&P/JMO Seminars (T)
1145–1315 Lunch w/Students & Faculty (Mahan Rotunda)
1315–1400 Tour ending at Learning Commons (LC)
1400–1430 NWC Foundation
1430–1600 College Update Part 2
Strategic Issues, High Velocity Learning, Re-inventing the College: Gaming & Simulation, High Velocity Learning, Prioritizing our Missions, Prioritizing Resources
1600–1630 Board Business

Individuals without a DoD Government Common Access Card require an escort at the meeting location. For access, information, or to send written statements for consideration at the committee meeting must contact Mr. Richard R. Menard, Chief of Staff to the Provost, Naval War College, 686 Cushing Road, Newport, RI 02841–1207 or by fax 401–841–1297 by March 31, 2016.

Dated: February 29 2016.

N.A. Hagerty-Ford,

Commander, Judge Advocate General's Corps, U.S. Navy, Federal Register Liaison Officer.

[FR Doc. 2016–05377 Filed 3–9–16; 8:45 am]

BILLING CODE 3810–FF–P

DEPARTMENT OF DEFENSE

Department of the Navy

Notice of Availability of Record of Decision for the Final Environmental Impact Statement for Military Readiness Activities at the Fallon Training Range Complex, Nevada

AGENCY: Department of the Navy, DoD.

ACTION: Notice.

SUMMARY: The Department of the Navy (DoN), after carefully weighing the strategic, operational, and environmental consequences of the proposed action, announces its decision to continue and enhance training activities as identified in Alternative 2 in the Final Environmental Impact Statement for Military Readiness Activities at the Fallon Range Training Complex. This alternative includes a 16 percent increase in existing aviation and ground training activities, the transition to new weapons platforms and systems as they become available to the DoN, and new ground training activities. Implementation of Alternative 2 will enable the DoN to achieve the levels of operational readiness required under section 5062 title 10 U.S.C. without resulting in significant environmental impacts.

SUPPLEMENTARY INFORMATION: The complete text of the Record of Decision is available at *http://frtceis.com.* Single copies of the Record of Decision are available upon request by contacting: FRTC EIS Project Manager, Naval Facilities Engineering Command Southwest, 1220 Pacific Highway, San Diego, California 92132.

Dated: March 1, 2016.

N.A. Hagerty-Ford,

Commander, Judge Advocate General's Corps, U.S. Navy, Federal Register Liaison Officer.

[FR Doc. 2016–05379 Filed 3–9–16; 8:45 am]

BILLING CODE 3810–FF–P

DEPARTMENT OF ENERGY

Federal Energy Regulatory Commission

[Project No. 13305–005]

Whitestone Power and Communications; Notice of Application Accepted for Filing, Soliciting Comments, Motions To Intervene, and Protests

Take notice that the following hydroelectric application has been filed with the Commission and is available for public inspection:

a. *Type of Application:* Surrender of License.

b. *Project No.:* 13305–005.

c. *Date Filed:* September 1, 2015.

d. *Applicant:* Whitestone Power and Communications.

e. *Name of Project:* Whitestone Poncelet River-In-Stream-Energy-Conversion Pilot Project.

f. *Location:* The unconstructed project would be located on the Tanana River, at its confluence with the Delta River, near the city of Delta Junction, Alaska.

g. *Filed Pursuant to:* 18 CFR 6.1.

h. *Applicant Contact:* Steven A. Selvaggio, P.E., Whitestone Power and Communications, P.O. Box 1229, Delta Junction, AK 99737, *steve.wsmech@gmail.com,* Phone: (907) 895–4770, Mobile: (907) 803–3021, Fax: (907) 895–4346.

i. *FERC Contact:* Mr. Ashish Desai, (202) 502–8370, *Ashish.Desai@ferc.gov.*

j. Deadline for filing comments, motions to intervene and protests, is 30 days from the issuance date of this notice. The Commission strongly encourages electronic filing. Please file motions to intervene, protests, comments, and recommendations, using the Commission's eFiling system at *http://www.ferc.gov/docs-filing/efiling.asp.* Commenters can submit brief comments up to 6,000 characters, without prior registration, using the eComment system at *http://www.ferc.gov/docs-filing/ecomment.asp.* You must include your name and contact information at the end of your comments. For assistance, please contact FERC Online Support at *FERCOnlineSupport@ferc.gov,* (866) 208–3676 (toll free), or (202) 502–8659 (TTY). In lieu of electronic filing, please send a paper copy to: Secretary, Federal Energy Regulatory Commission, 888 First Street NE., Washington, DC 20426. The first page of any filing should include docket number P–13305–005.

k. *Description of Project Facilities:* The unconstructed hydrokinetic project would consist of: (1) A 12-foot-wide, 16-foot-diameter Poncelet undershot water

wheel with a 100-kW turbine/generator unit mounted on; (2) a 34-footlong, 19- to 24-foot-wide, aluminum-frame floating platform mounted on; (3) two, 34-foot-long, 3.0- to 3.5-foot-diameter high-density-polyethylene pontoons connected to (4) a 33-foot-long, 3.5-foot-wide access bridge; (5) three anchoring cables including: (a) A 30-foot-long primary safety tether, (b) a 117-foot-long primary cable, and (c) a 100-foot-long secondary cable; (6) a debris deflection cone installed on the upstream side of the floating platform to direct floating debris away from the pontoons supporting the floating platform; (7) an approximately 900-foot-long, 480-volt armored and insulated transmission cable routed from the floating platform to intertie with an existing 14.4-kilovolt (kV) Golden Valley Electric Association distribution line; and (9) appurtenant facilities.

l. *Description of Request:* On September 1, 2015, Whitestone Power and Communications filed a request to surrender their pilot license for the unconstructed project stating they were unable to obtain the funding necessary to construct the project.

m. *Locations of the Application:* A copy of the application is available for inspection and reproduction at the Commission's Public Reference Room, located at 888 First Street NE., Room 2A, Washington, DC 20426, or by calling (202) 502–8371. This filing may also be viewed on the Commission's Web site at *http://www.ferc.gov/docs-filing/elibrary.asp.* Enter the docket number excluding the last three digits in the docket number field to access the document. You may also register online at *http://www.ferc.gov/docs-filing/esubscription.asp* to be notified via email of new filings and issuances related to this or other pending projects. For assistance, call 1–866–208–3676 or email *FERCOnlineSupport@ferc.gov,* for TTY, call (202) 502–8659. A copy is also available for inspection and reproduction at the address in item (h) above.

n. Individuals desiring to be included on the Commission's mailing list should so indicate by writing to the Secretary of the Commission.

o. *Comments, Protests, or Motions to Intervene:* Anyone may submit comments, a protest, or a motion to intervene in accordance with the requirements of Rules of Practice and Procedure, 18 CFR 385.210, .211, .214. In determining the appropriate action to take, the Commission will consider all protests or other comments filed, but only those who file a motion to intervene in accordance with the Commission's Rules may become a party to the proceeding. Any comments, protests, or motions to intervene must be received on or before the specified comment date for the particular application.

p. *Filing and Service of Responsive Documents:* Any filing must (1) bear in all capital letters the title ''COMMENTS'', ''PROTEST'', or ''MOTION TO INTERVENE'' as applicable; (2) set forth in the heading the name of the applicant and the project number of the application to which the filing responds; (3) furnish the name, address, and telephone number of the person protesting or intervening; and (4) otherwise comply with the requirements of 18 CFR 385.2001 through 385.2005. All comments, motions to intervene, or protests must set forth their evidentiary basis and otherwise comply with the requirements of 18 CFR 4.34(b). All comments, motions to intervene, or protests should relate to project works which are the subject of the license surrender. Agencies may obtain copies of the application directly from the applicant. A copy of any protest or motion to intervene must be served upon each representative of the applicant specified in the particular application. If an intervener files comments or documents with the Commission relating to the merits of an issue that may affect the responsibilities of a particular resource agency, they must also serve a copy of the document on that resource agency. A copy of all other filings in reference to this application must be accompanied by proof of service on all persons listed in the service list prepared by the Commission in this proceeding, in accordance with 18 CFR 4.34(b) and 385.2010.

Dated: March 4, 2016.

Nathaniel J. Davis, Sr.,

Deputy Secretary.

[FR Doc. 2016–05355 Filed 3–9–16; 8:45 am]

BILLING CODE 6717–01–P

DEPARTMENT OF ENERGY

Federal Energy Regulatory Commission

[Project No. 2897–044]

S.D. Warren; Notice of Application Accepted for Filing, Soliciting Comments, Motions To Intervene, and Protests

Take notice that the following hydroelectric application has been filed with the Commission and is available for public inspection:

a. *Type of Application:* Surrender of License.

b. *Project No.:* 2897–044.

c. *Date Filed:* December 2, 2015.

d. *Applicant:* S.D. Warren.

e. *Name of Project:* Saccarappa Project.

f. *Location:* On the Presumpscot River in Westbrook, Cumberland County, Maine.

g. *Filed Pursuant to:* 18 CFR 6.1.

h. *Applicant Contact:* Barry Stemm, Senior Engineer, Sappi North America, P.O. Box 5000, Westbrook, ME 04098, (207) 856–4584, and Briana K. O'Regan, Esq., Assistant General Counsel, Sappi North America, 179 John Roberts Road, South Portland, ME 04106, (207) 854–7070.

i. *FERC Contact:* Mr. M. Joseph Fayyad, (202) 502–8759, *Mo.Fayyad@ferc.gov,* and Jennifer Ambler, (202) 502–8586, *Jennifer.Ambler@ferc.gov.*

j. Deadline for filing comments, motions to intervene and protests, is 30 days from the issuance date of this notice. The Commission strongly encourages electronic filing. Please file motions to intervene, protests, comments, and recommendations, using the Commission's eFiling system at *http://www.ferc.gov/docs-filing/efiling.asp.* Commenters can submit brief comments up to 6,000 characters, without prior registration, using the eComment system at *http://www.ferc.gov/docs-filing/ecomment.asp.* You must include your name and contact information at the end of your comments. For assistance, please contact FERC Online Support at *FERCOnlineSupport@ferc.gov,* (866) 208–3676 (toll free), or (202) 502–8659 (TTY). In lieu of electronic filing, please send a paper copy to: Secretary, Federal Energy Regulatory Commission, 888 First Street, NE., Washington, DC 20426. The first page of any filing should include docket number P–2897–044.

k. Description of Project Facilities: The existing project as licensed consists of: (a) A 322-foot-long concrete dam, comprised of a 220-foot-long by 10-foot-high east overflow section and a 102-foot-long by 12-foot-high west overflow section; (b) a headgate structure of approximately 60 feet in length, with three 7.5-foot-wide by 9.5-foot-high intake gates; (c) a 380-foot-long by 36-foot-wide bedrock lined intake canal; (c) an 80-foot-long forebay; (d) a 5.0-mile-long impoundment, with a normal pool elevation of 69.95 feet USGS datum, a surface area of about 87 acres and negligible storage; (e) a 49-foot-wide by 71-foot-long masonry powerhouse; (f) three generating units with a total project installed capacity of 1,350 kW; (g) two bypassed reaches measuring 475

and 390 feet in length; (h) a 345-foot-long tailrace, formed by a 33-foot-high guard wall; (i) a 1-mile-long, 2.3-kilovolt (kV) transmission line/generator lead; and (j) other appurtenances.

l. Description of Request: The licensee's surrender proposal involves removal of the eastern spillway, western spillway, and ancillary structures in the forebay channel, filling the existing tailrace, installation of a double Denil fishway within the filled tailrace structure, and physical modifications in the upper western channel to facilitate nature like fish passage. The generating units and transmission facilities will also be removed; however, the powerhouse structure will remain for now, but will likely eventually be demolished.

m. Locations of the Application: A copy of the application is available for inspection and reproduction at the Commission's Public Reference Room, located at 888 First Street NE., Room 2A, Washington, DC 20426, or by calling (202) 502–8371. This filing may also be viewed on the Commission's Web site at *http://www.ferc.gov/docs-filing/elibrary.asp.* Enter the docket number excluding the last three digits in the docket number field to access the document. You may also register online at *http://www.ferc.gov/docs-filing/esubscription.asp* to be notified via email of new filings and issuances related to this or other pending projects. For assistance, call 1–866–208- 3676 or email *FERCOnlineSupport@ferc.gov,* for TTY, call (202) 502–8659. A copy is also available for inspection and reproduction at the address in item (h) above.

n. Individuals desiring to be included on the Commission's mailing list should so indicate by writing to the Secretary of the Commission.

o. Comments, Protests, or Motions to Intervene: Anyone may submit comments, a protest, or a motion to intervene in accordance with the requirements of Rules of Practice and Procedure, 18 CFR 385.210, .211, and .214. In determining the appropriate action to take, the Commission will consider all protests or other comments filed, but only those who file a motion to intervene in accordance with the Commission's Rules may become a party to the proceeding. Any comments, protests, or motions to intervene must be received on or before the specified comment date for the particular application.

p. Filing and Service of Responsive Documents: Any filing must (1) bear in all capital letters the title ''COMMENTS'', ''PROTEST'', or ''MOTION TO INTERVENE'' as applicable; (2) set forth in the heading the name of the applicant and the project number of the application to which the filing responds; (3) furnish the name, address, and telephone number of the person protesting or intervening; and (4) otherwise comply with the requirements of 18 CFR 385.2001 through 385.2005. All comments, motions to intervene, or protests must set forth their evidentiary basis and otherwise comply with the requirements of 18 CFR 4.34(b). All comments, motions to intervene, or protests should relate to project works which are the subject of the license surrender. Agencies may obtain copies of the application directly from the applicant. A copy of any protest or motion to intervene must be served upon each representative of the applicant specified in the particular application. If an intervener files comments or documents with the Commission relating to the merits of an issue that may affect the responsibilities of a particular resource agency, they must also serve a copy of the document on that resource agency. A copy of all other filings in reference to this application must be accompanied by proof of service on all persons listed in the service list prepared by the Commission in this proceeding, in accordance with 18 CFR 4.34(b) and 385.2010.

Dated: March 3, 2016.

Nathaniel J. Davis, Sr.,

Deputy Secretary.

[FR Doc. 2016–05354 Filed 3–9–16; 8:45 am]

BILLING CODE 6717–01–P

DEPARTMENT OF ENERGY

Federal Energy Regulatory Commission

Combined Notice of Filings #1

Take notice that the Commission received the following exempt wholesale generator filings:

Docket Numbers: EG16–62–000.
Applicants: Golden Fields Solar I, LLC.
Description: Notice of Self-Certification of Exempt Wholesale Generator Status of Golden Fields Solar I, LLC.
Filed Date: 3/3/16.
Accession Number: 20160303–5097.
Comments Due: 5 p.m. ET 3/24/16.

Take notice that the Commission received the following electric rate filings:

Docket Numbers: ER16–466–000.
Applicants: Anahau Energy, LLC.
Description: Supplement to December 4, 2015 Notification of Change in Status and Tariff Amendment.
Filed Date: 3/3/16.
Accession Number: 20160303–5206.
Comments Due: 5 p.m. ET 3/24/16.

Docket Numbers: ER16–871–001.
Applicants: Portland General Electric Company.
Description: Tariff Amendment: PGE OATT Section 7 Revision Amendment to be effective 4/2/2016.
Filed Date: 3/4/16.
Accession Number: 20160304–5189.
Comments Due: 5 p.m. ET 3/25/16.

Docket Numbers: ER16–904–001.
Applicants: Smith Creek Hydro, LLC.
Description: Tariff Amendment: Amendment to MBR to be effective 4/1/2016.
Filed Date: 3/4/16.
Accession Number: 20160304–5138.
Comments Due: 5 p.m. ET 3/14/16.

Docket Numbers: ER16–1076–000.
Applicants: 360Recycling.
Description: Baseline eTariff Filing: Application for MBR Authority to be effective 4/19/2016.
Filed Date: 3/4/16.
Accession Number: 20160304–5045.
Comments Due: 5 p.m. ET 3/25/16.

Docket Numbers: ER16–1077–000.
Applicants: Southwest Power Pool, Inc.
Description: Section 205(d) Rate Filing: 2014 Southwestern Power Administration Amendatory Agreement Third Extension to be effective 3/1/2016.
Filed Date: 3/4/16.
Accession Number: 20160304–5086.
Comments Due: 5 p.m. ET 3/25/16.

Docket Numbers: ER16–1078–000.
Applicants: PJM Interconnection, L.L.C.
Description: Section 205(d) Rate Filing: Original Service Agreement No. 4415; Queue Position Z2–028 to be effective 2/3/2016.
Filed Date: 3/4/16.
Accession Number: 20160304–5105.
Comments Due: 5 p.m. ET 3/25/16.

Docket Numbers: ER16–1080–000.
Applicants: TransCanada Power Marketing Ltd.
Description: Section 205(d) Rate Filing: Notice of Succession to be effective 2/1/2016.
Filed Date: 3/4/16.
Accession Number: 20160304–5111.
Comments Due: 5 p.m. ET 3/25/16.

Docket Numbers: ER16–1081–000.
Applicants: Midcontinent Independent System Operator, Inc.
Description: Section 205(d) Rate Filing: 2016–03–04_SA 2900 Cedar Falls-Western Minnesota Municipal GIA (J329) to be effective 3/5/2016.

Filed Date: 3/4/16.
Accession Number: 20160304–5136.
Comments Due: 5 p.m. ET 3/25/16.

Docket Numbers: ER16–1083–000.
Applicants: Midcontinent Independent System Operator, Inc.
Description: Section 205(d) Rate Filing: 2016–03–04_SA 2786 ITC Midwest-IPL 1st Rev GIA (J233) to be effective 3/5/2016.
Filed Date: 3/4/16.
Accession Number: 20160304–5230.
Comments Due: 5 p.m. ET 3/25/16.

Docket Numbers: ER16–1084–000.
Applicants: PJM Interconnection, L.L.C.
Description: Section 205(d) Rate Filing: Original ISA No. 4408, Queue No. Z1–038 to be effective 2/3/2016.
Filed Date: 3/4/16.
Accession Number: 20160304–5249.
Comments Due: 5 p.m. ET 3/25/16.

The filings are accessible in the Commission's eLibrary system by clicking on the links or querying the docket number.

Any person desiring to intervene or protest in any of the above proceedings must file in accordance with Rules 211 and 214 of the Commission's Regulations (18 CFR 385.211 and 385.214) on or before 5:00 p.m. Eastern time on the specified comment date. Protests may be considered, but intervention is necessary to become a party to the proceeding.

eFiling is encouraged. More detailed information relating to filing requirements, interventions, protests, service, and qualifying facilities filings can be found at: *http://www.ferc.gov/docs-filing/efiling/filing-req.pdf.* For other information, call (866) 208–3676 (toll free). For TTY, call (202) 502–8659.

Dated: March 4, 2016.

Nathaniel J. Davis, Sr.,

Deputy Secretary.

[FR Doc. 2016–05353 Filed 3–9–16; 8:45 am]

BILLING CODE 6717–01–P

DEPARTMENT OF ENERGY

Federal Energy Regulatory Commission

[Docket No. AD16–16–000]

Implementation Issues Under the Public Utility Regulatory Policies Act of 1978; Supplemental Notice Concerning Technical Conference

As announced in the Notice of Technical Conference issued on February 9, 2016, the Federal Energy Regulatory Commission (Commission) will hold a technical conference on June 29, 2016, from 9:00 a.m. to approximately 4:00 p.m. on implementation issues under the Public Utility Regulatory Policies Act of 1978 (PURPA).[1] The conference will be held in the Commission Meeting Room at the Federal Energy Regulatory Commission, 888 First Street NE., Washington, DC 20426.

The purpose of the technical conference is to focus on issues associated with the Commission's implementation of PURPA. As provided in the attached preliminary agenda, the conference will focus on two issues: The mandatory purchase obligation under PURPA and the determination of avoided costs for those purchases.

Those interested in speaking at the technical conference should notify the Commission by April 4, 2016, by completing the online form at the following Web page: *https://www.ferc.gov/whats-new/registration/06-29-16-speaker-form.asp.* At this Web page, please provide an abstract (700 character limit) of the issue(s) you propose to address. Due to time constraints, we expect to not be able to accommodate all those interested in speaking. Selected speakers will be notified as soon as possible.

Those who plan to attend the technical conference are strongly encouraged to complete the registration form located at: *https://www.ferc.gov/whats-new/registration/06-29-16-form.asp.* There is no registration deadline or fee to attend the conference.

Information on this event will be posted on the Calendar of Events on the Commission's Web site, *http://www.ferc.gov,* prior to the event. The conference will be transcribed. Transcripts will be available for a fee from Ace Reporting Company (202–347–3700). A free webcast of this event is also available through *www.ferc.gov.* Anyone with Internet access who desires to view this event can do so by navigating to *http://www.ferc.gov* Calendar of Events and locating this event in the Calendar. The event will contain a link to the webcast. The Capitol Connection provides technical support for webcasts and offers the option of listening to the meeting via phone-bridge for a fee. If you have any questions, visit *www.CapitolConnection.org* or call 703–993–3100.

Commission conferences are accessible under section 508 of the Rehabilitation Act of 1973. For accessibility accommodations, please send an email to *accessibility@ferc.gov* or call toll free (866) 208–3372 (voice) or (202) 208–1659 (TTY), or send a FAX to (202) 208–2106 with the required accommodations.

For more information about the technical conferences, please contact:

Technical Information

Adam Alvarez, Office of Energy Market Regulation, Federal Energy Regulatory Commission, 888 First Street NE., Washington, DC 20426, (202) 502–6734, *Adam.Alvarez@ferc.gov.*

Legal Information

Loni Silva, Office of the General Counsel, Federal Energy Regulatory Commission, 888 First Street NE., Washington, DC 20426, (202) 502–6233, *Loni.Silva@ferc.gov.*

Logistical Information

Sarah McKinley, Office of External Affairs, Federal Energy Regulatory Commission, 888 First Street NE., Washington, DC 20426, (202) 502–8368. *Sarah.Mckinley@ferc.gov.*

Dated: March 4, 2016.

Nathaniel J. Davis, Sr.,

Deputy Secretary.

[FR Doc. 2016–05351 Filed 3–9–16; 8:45 am]

BILLING CODE 6717–01–P

[1] 16 U.S.C. 824a–3 (2012).

DEPARTMENT OF ENERGY

Federal Energy Regulatory Commission

Combined Notice of Filings #1

Take notice that the Commission received the following electric rate filings:

Docket Numbers: ER10–3097–005.
Applicants: Bruce Power Inc.
Description: Notice of Non-Material Change in Status of Bruce Power Inc.
Filed Date: 3/2/16.
Accession Number: 20160302–5237.
Comments Due: 5 p.m. ET 3/23/16.

Docket Numbers: ER16–917–001; ER10–2870–006; ER10–2865–006; ER10–2860–007; ER10–2872–005; ER10–2868–005; ER14–2458–001; ER11–3013–005.
Applicants: TC Ironwood LLC, TransCanada Power Marketing Ltd, TransCanada Energy Sales Ltd., TC Ravenswood, LLC, TransCanada Maine Wind Development Inc., TransCanada Hydro Northeast Inc., Ocean State Power LLC, Coolidge Power LLC.
Description: Notice of Non-Material Change in Status of TransCanada MBR Sellers.
Filed Date: 3/2/16.
Accession Number: 20160302–5238.
Comments Due: 5 p.m. ET 3/23/16.

Docket Numbers: ER16–923–001.
Applicants: Puget Sound Energy, Inc.

Description: Tariff Amendment: EIM Revision Filing Due to Effective Date Issue to be effective 5/1/2016.
Filed Date: 3/2/16.
Accession Number: 20160302–5192.
Comments Due: 5 p.m. ET 3/9/16.

Docket Numbers: ER16–975–000.
Applicants: New York Independent System Operator, Inc., Niagara Mohawk Power Corporation.
Description: Amendment to February 19, 2016 Joint Notice of Termination of Small Generator Interconnection Service Agreement No. 1483 Among the New York Independent System Operator, Inc., et al.
Filed Date: 3/2/16.
Accession Number: 20160302–5206.
Comments Due: 5 p.m. ET 3/16/16.

Docket Numbers: ER16–1062–000.
Applicants: MidAmerican Energy Company.
Description: § 205(d) Rate Filing: Services Tariff v.2 to be effective 4/1/2016.
Filed Date: 3/3/16.
Accession Number: 20160303–5014.
Comments Due: 5 p.m. ET 3/24/16.

Docket Numbers: ER16–1063–000.
Applicants: Emera Maine.
Description: Notice of Termination of Emera Maine of Interconnection and Operating Agreement No. 42 under Bangor-Hydro Electric Company, FERC Electric Tariff 2nd Revised Volume No. 2.
Filed Date: 3/2/16.
Accession Number: 20160302–5243.
Comments Due: 5 p.m. ET 3/23/16.

Docket Numbers: ER16–1064–000.
Applicants: Southwest Power Pool, Inc.
Description: § 205(d) Rate Filing: 1636R15 Kansas Electric Power Cooperative, Inc. NITSA and NOA to be effective 8/1/2015.
Filed Date: 3/3/16.
Accession Number: 20160303–5029.
Comments Due: 5 p.m. ET 3/24/16.

Docket Numbers: ER16–1065–000.
Applicants: Southwest Power Pool, Inc.
Description: § 205(d) Rate Filing: 1875R1 Kansas Electric Power Cooperative, Inc. NITSA and NOA to be effective 8/1/2015.
Filed Date: 3/3/16.
Accession Number: 20160303–5031.
Comments Due: 5 p.m. ET 3/24/16.

Docket Numbers: ER16–1068–000.
Applicants: East Ridge Transmission, LLC.
Description: Baseline eTariff Filing: Transmission Agreement and Request for Certain Waivers and Blanket Approvals to be effective 5/3/2016.
Filed Date: 3/3/16.
Accession Number: 20160303–5129.
Comments Due: 5 p.m. ET 3/24/16.

Docket Numbers: ER16–1069–000.
Applicants: East Ridge Transmission, LLC.
Description: § 205(d) Rate Filing: Transmission Agreement and Request for Certain Waivers and Blanket Approvals to be effective 5/3/2016.
Filed Date: 3/3/16.
Accession Number: 20160303–5130.
Comments Due: 5 p.m. ET 3/24/16.

Docket Numbers: ER16–1070–000.
Applicants: East Ridge Transmission, LLC.
Description: § 205(d) Rate Filing: Transmission Agreement and Request for Certain Waivers and Blanket Approvals to be effective 5/3/2016.
Filed Date: 3/3/16.
Accession Number: 20160303–5131.
Comments Due: 5 p.m. ET 3/24/16.

Docket Numbers: ER16–1071–000.
Applicants: East Ridge Transmission, LLC.
Description: § 205(d) Rate Filing: Transmission Agreement and Request for Certain Waivers and Blanket Approvals to be effective 5/3/2016.
Filed Date: 3/3/16.
Accession Number: 20160303–5132.
Comments Due: 5 p.m. ET 3/24/16.

Docket Numbers: ER16–1072–000.
Applicants: East Ridge Transmission, LLC.
Description: § 205(d) Rate Filing: Transmission Agreement and Request for Certain Waivers and Blanket Approvals to be effective 5/3/2016.
Filed Date: 3/3/16.
Accession Number: 20160303–5133.
Comments Due: 5 p.m. ET 3/24/16.

Docket Numbers: ER16–1073–000.
Applicants: East Ridge Transmission, LLC.
Description: § 205(d) Rate Filing: Transmission Agreement and Request for Certain Waivers and Blanket Approvals to be effective 5/3/2016.
Filed Date: 3/3/16.
Accession Number: 20160303–5136.
Comments Due: 5 p.m. ET 3/24/16.

Docket Numbers: ER16–1074–000.
Applicants: East Ridge Transmission, LLC.
Description: § 205(d) Rate Filing: Transmission Agreement and Request for Certain Waivers and Blanket Approvals to be effective 5/3/2016.
Filed Date: 3/3/16.
Accession Number: 20160303–5141.
Comments Due: 5 p.m. ET 3/24/16.

Docket Numbers: ER16–1075–000.
Applicants: East Ridge Transmission, LLC.
Description: § 205(d) Rate Filing: Transmission Agreement and Request for Certain Waivers and Blanket Approvals to be effective 5/3/2016.
Filed Date: 3/3/16.
Accession Number: 20160303–5147.
Comments Due: 5 p.m. ET 3/24/16.

Take notice that the Commission received the following electric reliability filings:

Docket Numbers: RR15–2–004.
Applicants: North American Electric Reliability Corp.
Description: North American Electric Reliability Corporation Compliance Filing and Petition for Approval of Rules of Procedure Revision.
Filed Date: 3/3/16.
Accession Number: 20160303–5146.
Comments Due: 5 p.m. ET 3/24/16.

The filings are accessible in the Commission's eLibrary system by clicking on the links or querying the docket number.

Any person desiring to intervene or protest in any of the above proceedings must file in accordance with Rules 211 and 214 of the Commission's Regulations (18 CFR 385.211 and 385.214) on or before 5:00 p.m. Eastern time on the specified comment date. Protests may be considered, but intervention is necessary to become a party to the proceeding.

eFiling is encouraged. More detailed information relating to filing requirements, interventions, protests, service, and qualifying facilities filings can be found at: *http://www.ferc.gov/docs-filing/efiling/filing-req.pdf.* For other information, call (866) 208–3676 (toll free). For TTY, call (202) 502–8659.

Dated: March 3, 2016.

Nathaniel J. Davis, Sr.,

Deputy Secretary.

[FR Doc. 2016–05352 Filed 3–9–16; 8:45 am]

BILLING CODE 6717–01–P

ENVIRONMENTAL PROTECTION AGENCY

[EPA–HQ–ORD–2013–0430; FRL 9943–05–ORD]

Public Comment Draft for the Integrated Risk Information System (IRIS) Assessment of Hexahydro-1,3,5-trinitro-1,3,5-triazine (RDX)

AGENCY: Environmental Protection Agency (EPA).

ACTION: Notice of public comment period.

SUMMARY: Environmental Protection Agency (EPA) is announcing a 60-day public comment period for the draft IRIS Toxicological Review of Hexahydro-1,3,5-trinitro-1,3,5-triazine

(RDX). The draft document was prepared by the National Center for Environmental Assessment (NCEA) within EPA's Office of Research and Development (ORD).

EPA is releasing this draft IRIS assessment for public comment and discussion during the May 10, 2016 IRIS Public Science Meeting. All future announcements about this public comment draft and IRIS Public Science Meetings will be made on the IRIS Web site (*www.epa.gov/iris*). This draft assessment is not final as described in EPA's information quality guidelines, and it does not represent, and should not be construed to represent Agency policy or views. EPA will consider all public comments submitted in response to this notice when revising this document.

DATES: The 60-day public comment period begins March 10, 2016, and ends May 9, 2016. Comments must be received on or before May 9, 2016.

ADDRESSES: The draft IRIS Toxicological Review of Hexahydro-1,3,5-trinitro-1,3,5-triazine (RDX) will be available via the Internet on IRIS' Recent Additions at *http://www.epa.gov/iris/iris-recent-additions* or the public docket at *http://www.regulations.gov*, Docket ID: EPA–HQ–ORD–2013–0430.

FOR FURTHER INFORMATION CONTACT: For information on the public comment period, contact the ORD Docket at the EPA Headquarters Docket Center; telephone: 202–566–1752; facsimile: 202–566–9744; or email: *Docket_ORD@epa.gov.*

For technical information on the draft IRIS assessment of Hexahydro-1,3,5-trinitro-1,3,5-triazine (RDX), contact Dr. Louis D'Amico, NCEA; telephone: 703–347–0344; facsimile: 703–347–8689; or email: *damico.louis@epa.gov.*

SUPPLEMENTARY INFORMATION:

I. Information About IRIS

EPA's IRIS Program is a human health assessment program that evaluates quantitative and qualitative risk information on effects that may result from exposure to chemicals found in the environment. Through the IRIS Program, EPA provides the highest quality science-based human health assessments to support the Agency's regulatory activities and decisions to protect public health. The IRIS database contains information on chemicals that can be used to support the first two steps (hazard identification and dose-response evaluation) of the human health risk assessment process. When supported by available data, IRIS provides health effects information and toxicity values for health effects (including cancer and effects other than cancer). Government and others combine IRIS toxicity values with exposure information to characterize public health risks of chemicals; this information is then used to support risk management decisions designed to protect public health.

II. How to Submit Technical Comments to the Docket at *http://www.regulations.gov*

Submit your comments, identified by Docket ID No. EPA–HQ–ORD–2013–0430, by one of the following methods:

- *http://www.regulations.gov:* Submit your comments, identified by Docket ID No. EPA–HQ–ORD–2013–0430 to the *Federal eRulemaking Portal: http://www.regulations.gov.* Follow the online instructions for submitting comments. Once submitted, comments cannot be edited or withdrawn. The EPA may publish any comment received to its public docket. Do not submit electronically any information you consider to be Confidential Business Information (CBI) or other information whose disclosure is restricted by statute. Multimedia submissions (audio, video, etc.) must be accompanied by a written comment. The written comment is considered the official comment and should include discussion of all points you wish to make. The EPA will generally not consider comments or comment contents located outside of the primary submission (*i.e.* on the Web, cloud, or other file sharing system). For additional submission methods, the full EPA public comment policy, information about CBI or multimedia submissions, and general guidance on making effective comments, please visit *http://www2.epa.gov/dockets/commenting-epa-dockets.*
- *Email: Docket_ORD@epa.gov.*
- *Fax:* 202–566–9744.
- *Mail:* U.S. Environmental Protection Agency, EPA Docket Center (ORD Docket), Mail Code: 28221T, 1200 Pennsylvania Avenue NW., Washington, DC 20460. The phone number is 202–566–1752.
- *Hand Delivery:* The ORD Docket is located in the EPA Headquarters Docket Center, EPA West Building, Room 3334, 1301 Constitution Avenue NW., Washington, DC.

The EPA Docket Center Public Reading Room is open from 8:30 a.m. to 4:30 p.m., Monday through Friday, excluding legal holidays. The telephone number for the Public Reading Room is 202–566–1744. Deliveries are only accepted during the docket's normal hours of operation, and special arrangements should be made for deliveries of boxed information. If you provide comments by mail or hand delivery, please submit three copies of the comments. For attachments, provide an index, number pages consecutively with the comments, and submit an unbound original and three copies.

Docket: Documents in the docket are listed in the *www.regulations.gov* index. Although listed in the index, some information is not publicly available, *e.g.,* CBI or other information whose disclosure is restricted by statute. Certain other materials, such as copyrighted material, are publicly available only in hard copy. Publicly available docket materials are available either electronically in *www.regulations.gov* or in hard copy at the ORD Docket in the EPA Headquarters Docket Center.

Dated: March 1, 2016.

Mary A. Ross,

Deputy Director, National Center for Environmental Assessment (NCEA).

[FR Doc. 2016–05277 Filed 3–8–16; 8:45 am]

BILLING CODE 6560–50–P

ENVIRONMENTAL PROTECTION AGENCY

[FRL–9943–58–OA]

National Environmental Education Advisory Council; Solicitation of Applications

AGENCY: Environmental Protection Agency (EPA).

ACTION: Notice.

SUMMARY: The U.S. Environmental Protection Agency (EPA or Agency office of Public Engagement and Environmental Education) is soliciting applications for environmental education professionals for consideration to serve on the National Environmental Education Advisory Council (NEEAC). There are nine vacancies on the Advisory Council that must be filled. Additional avenues and resources may be utilized in the solicitation of applications. In an effort to obtain nominations of diverse candidates, EPA encourages nominations of women and men of all racial and ethnic groups.

DATES: Applications should be submitted by April 15, 2016.

ADDRESSES: Submit non-electronic application materials to Javier Araujo, Designated Federal Officer, National Environmental Education Advisory Council, U.S. Environmental Protection Agency, Office of Public Engagement and Environmental Education (MC 1704A), 1200 Pennsylvania Ave. NW., Room 1426 (WJCN), Washington, DC

20460, Phone: (202) 564–2642, Fax (202) 564–2753, email: *araujo.javier@epa.gov*.

FOR FURTHER INFORMATION CONTACT: For information regarding this Request for Nominations, please contact Mr. Javier Araujo, Designated Federal Officer, *araujo.javier@epa.gov,* 202–564–2642, U.S. EPA, Office of Environmental Education, William Jefferson Clinton North, Room 1426, 1200 Pennsylvania Avenue NW., Washington, DC 20460.

General Information concerning NEEAC can be found on the EPA Web site at: *http://www2.epa.gov/education/national-environmental-education-advisory-council*.

SUPPLEMENTARY INFORMATION: The National Environmental Education Act requires that the council be comprised of (11) members appointed by the Administrator of the EPA. Members represent a balance of perspectives, professional qualifications, and experience. The Act specifies that members must represent the following sectors: Primary and secondary education (one of whom shall be a classroom teacher), two members; colleges and universities, two members; business and industry, two members; non-profit organizations, two members; state departments of education and natural resources, two members, and one member to represent senior Americans. Members are chosen to represent various geographic regions of the country, and the Council strives for a diverse representation. The professional backgrounds of Council members should include education, science, policy, or other appropriate disciplines. Each member of the Council shall hold office for a one (1) to three (3) year period. Members are expected to participate in up to two (2) meetings per year and monthly or more conference calls per year. *Members of the council shall receive compensation and allowances, including travel expenses at a rate fixed by the Administrator.*

Expertise Sought: The NEEAC staff office seeks candidates with demonstrated experience and or knowledge in any of the following environmental education issue areas: (a) Integrating environmental education into state and local education reform and improvement; (b) state, local and tribal level capacity building for environmental education; (c) cross-sector partnerships to foster environmental education; (d) leveraging resources for environmental education; (e) design and implementation of environmental education research; (f) evaluation methodology; professional development for teachers and other education professionals; and targeting under-represented audiences, including low-income, multi-cultural, senior citizens and other adults.

The NEEAC is best served by a structurally and geographically diverse group of individuals. Each individual will demonstrate the ability to make a time commitment. In addition, the individual will demonstrate both strong leadership and analytical skills. Also, strong writing skills, communication skills and the ability to evaluate programs in an unbiased manner are essential. Team players, which can meet deadlines and review items on short notice are ideal candidates.

How to submit applications: Any interested and qualified individuals may be considered for appointment on the National Environmental Education Advisory Council. Applications should be submitted in electronic format to the Designated Federal Officer, Javier Araujo, *araujo.javier@epa.gov* and contain the following: Contact information including name, address, phone and fax numbers and an email address; a curriculum vitae or resume; the specific area of expertise in environmental education and the sector or slot the applicant is applying for; recent service on other national advisory committees or national professional organizations; a one page commentary on the applicant's philosophy regarding the need for, development, implementation and or management of environmental education nationally.

Persons having questions about the application procedure or who are unable to submit applications by electronic means, should contact Javier Araujo (DFO), at the contact information provided above in this notice. Non-electronic submissions must contain the same information as the electronic. The NEEAC staff Office will acknowledge receipt of the application. The NEEAC staff office will develop a short list of candidates for more detailed consideration. The short list candidates will be required to fill out the Confidential Disclosure Form for Special Government Employees serving Federal Advisory Committees at the U.S. Environmental Protection Agency. (EPA form 3110–48.) This confidential form allows government officials to determine whether there is a statutory conflict between that person's public responsibilities (which include membership on a Federal Advisory Committee) and private interests and activities and the appearance of a lack of impartiality as defined by Federal regulation. The form may be viewed and downloaded from the following URL address: *http://intranet.epa.gov/ogc/ethics/EPA3110-48ver3.pdf*.

Dated: February 29, 2016.

Sarah Sowell,

Deputy Director, Office of Environmental Education.

[FR Doc. 2016–05468 Filed 3–9–16; 8:45 am]

BILLING CODE P

ENVIRONMENTAL PROTECTION AGENCY

[EPA–HQ–OW–2015–0469; FRL_9943–52–OW]

Extension of Public Comment Period for the Draft Technical Support Document: Recommended Estimates for Missing Water Quality Parameters for Application in EPA's Biotic Ligand Model

AGENCY: Environmental Protection Agency (EPA).

ACTION: Notice; extension of comment period.

SUMMARY: The Environmental Protection Agency (EPA) is extending the comment period for the draft technical support document: *Recommended Estimates for Missing Water Quality Parameters for Application in EPA's Biotic Ligand Model.* In response to stakeholder requests, the comment period will be extended for an additional 32 days, from March 17, 2016 to April 18, 2016.

DATES: Comments must be received on or before April 18, 2016.

ADDRESSES: Submit your comments, identified by Docket ID No. EPA–HQ–OW–2015–0469, to the *Federal eRulemaking Portal: http://www.regulations.gov.* Follow the online instructions for submitting comments. Once submitted, comments cannot be edited or withdrawn. EPA may publish any comment received to its public docket. Do not submit electronically any information you consider to be Confidential Business Information (CBI) or other information whose disclosure is restricted by statute. Multimedia submissions (audio, video, etc.) must be accompanied by a written comment. The written comment is considered the official comment and should include discussion of all points you wish to make. EPA will generally not consider comments or comment contents located outside of the primary submission (*i.e.,* on the web, cloud, or other file sharing system). For additional submission methods, the full EPA public comment policy, information about CBI or multimedia submissions, and general guidance on making effective comments, please visit *http://*

www2.epa.gov/dockets/commenting-epa-dockets.

FOR FURTHER INFORMATION CONTACT: Kathryn Gallagher, Health and Ecological Criteria Division, Office of Water (Mail Code 4304T), Environmental Protection Agency, 1200 Pennsylvania Avenue NW., Washington, DC 20460; telephone: (202) 564–1398; email address: *gallagher.kathryn@epa.gov.*

SUPPLEMENTARY INFORMATION: On February 16, 2016 EPA announced the availability of the draft technical support document: *Recommended Estimates for Missing Water Quality Parameters for Application in EPA's Biotic Ligand Model,* and opened a 30-day public review and comment period to seek additional scientific views, data, and information regarding the science and technical approach used in the draft document (81 FR 7784).

The original deadline to submit comments was March 17, 2016. This action extends the comment period for 32 days. Written comments must now be received by April 18, 2016. The draft report and other supporting materials may also be viewed and downloaded from EPA's Web site at *http://www.epa.gov/wqc/aquatic-life-criteria-copper#draft.*

Dated: March 3, 2016.

Elizabeth Southerland,

Director, Office of Science and Technology.

[FR Doc. 2016–05281 Filed 3–9–16; 8:45 am]

BILLING CODE 6560–50–P

ENVIRONMENTAL PROTECTION AGENCY

[EPA–HQ–OPPT–2015–0688; FRL–9941–91]

Agency Information Collection Activities; Proposed Collection; Comment Request

AGENCY: Environmental Protection Agency (EPA).

ACTION: Notice.

SUMMARY: In compliance with the Paperwork Reduction Act (PRA), this document announces that EPA is planning to submit an Information Collection Request (ICR) to the Office of Management and Budget (OMB). The ICR, entitled: ''Recordkeeping and Reporting Requirements for Allegations of Significant Adverse Reactions to Human Health or the Environment'' and identified by EPA ICR No. 1031.11 and OMB Control No. 2070–0017, represents the renewal of an existing ICR that is scheduled to expire on September 30, 2016. Before submitting the ICR to OMB for review and approval, EPA is soliciting comments on specific aspects of the proposed information collection that is summarized in this document. The ICR and accompanying material are available in the docket for public review and comment.

DATES: Comments must be received on or before May 9, 2016.

ADDRESSES: Submit your comments, identified by docket identification (ID) number EPA–HQ–OPPT–2015–0688, by one of the following methods:

- *Federal eRulemaking Portal: http://www.regulations.gov.* Follow the online instructions for submitting comments. Do not submit electronically any information you consider to be Confidential Business Information (CBI) or other information whose disclosure is restricted by statute.
- *Mail:* Document Control Office (7407M), Office of Pollution Prevention and Toxics (OPPT), Environmental Protection Agency, 1200 Pennsylvania Ave. NW., Washington, DC 20460–0001.
- *Hand Delivery:* To make special arrangements for hand delivery or delivery of boxed information, please follow the instructions at *http://www.epa.gov/dockets/contacts.html.* Additional instructions on commenting or visiting the docket, along with more information about dockets generally, is available at *http://www.epa.gov/dockets.*

FOR FURTHER INFORMATION CONTACT:

For technical information contact: Mike Mattheisen, Chemical Control Division (7405M), Office of Pollution Prevention and Toxics, Environmental Protection Agency, 1200 Pennsylvania Ave. NW., Washington, DC 20460–0001; telephone number: (202) 564–3077; email address: *mattheisen.mike@epa.gov.*

For general information contact: The TSCA-Hotline, ABVI-Goodwill, 422 South Clinton Ave., Rochester, NY 14620; telephone number: (202) 554–1404; email address: *TSCA-Hotline@epa.gov.*

SUPPLEMENTARY INFORMATION:

I. What information is EPA particularly interested in?

Pursuant to PRA section 3506(c)(2)(A) (44 U.S.C. 3506(c)(2)(A)), EPA specifically solicits comments and information to enable it to:

1. Evaluate whether the proposed collection of information is necessary for the proper performance of the functions of the Agency, including whether the information will have practical utility.

2. Evaluate the accuracy of the Agency's estimates of the burden of the proposed collection of information, including the validity of the methodology and assumptions used.

3. Enhance the quality, utility, and clarity of the information to be collected.

4. Minimize the burden of the collection of information on those who are to respond, including through the use of appropriate automated electronic, mechanical, or other technological collection techniques or other forms of information technology, *e.g.,* permitting electronic submission of responses. In particular, EPA is requesting comments from very small businesses (those that employ less than 25) on examples of specific additional efforts that EPA could make to reduce the paperwork burden for very small businesses affected by this collection.

II. What information collection activity or ICR does this action apply to?

Title: Recordkeeping and Reporting Requirements for Allegations of Significant Adverse Reactions to Human Health or the Environment.

ICR number: EPA ICR No. 1031.11.

OMB control number: OMB Control No. 2070–0017.

ICR status: This ICR is currently scheduled to expire on September 30, 2016. An Agency may not conduct or sponsor, and a person is not required to respond to, a collection of information, unless it displays a currently valid OMB control number. The OMB control numbers for EPA's regulations in title 40 of the Code of Federal Regulations (CFR), after appearing in the **Federal Register** when approved, are listed in 40 CFR part 9, are displayed either by publication in the **Federal Register** or by other appropriate means, such as on the related collection instrument or form, if applicable. The display of OMB control numbers for certain EPA regulations is consolidated in 40 CFR part 9.

Abstract: TSCA section 8(c) requires companies that manufacture, process, or distribute chemicals to maintain records of significant adverse reactions to health or the environment alleged to have been caused by such chemicals. Since section 8(c) includes no automatic reporting provision, EPA can obtain and use the information contained in company files only by inspecting those files or requiring reporting of records that relate to specific substances of concern. Therefore, under certain conditions, and using the provisions found in 40 CFR part 717, EPA may require companies to report such allegations to the Agency.

EPA uses such information on a case-specific basis to corroborate suspected adverse health or environmental effects of chemicals already under review by

EPA. The information is also useful to identify trends of adverse effects across the industry that may not be apparent to any one chemical company. This ICR addresses the information reporting and recordkeeping requirements found in 40 CFR part 717.

Responses to the collection of information are mandatory (see 40 CFR part 717). Respondents may claim all or part of a notice as CBI. EPA will disclose information that is covered by a CBI claim only to the extent permitted by, and in accordance with, the procedures in 40 CFR part 2.

Burden statement: The annual public reporting and recordkeeping burden for this collection of information is estimated to average 1.36 hours per response. Burden is defined in 5 CFR 1320.3(b).

The ICR, which is available in the docket along with other related materials, provides a detailed explanation of the collection activities and the burden estimate that is only briefly summarized here:

Respondents/Affected Entities: Entities potentially affected by this ICR are companies that manufacture, process, import, or distribute in commerce chemical substances or mixtures.

Estimated total number of potential respondents: 13,160.

Frequency of response: On occasion.

Estimated total average number of responses for each respondent: 1.4.

Estimated total annual burden hours: 25,527 hours.

Estimated total annual costs: $1,911,471. This includes an estimated burden cost of $1,911,471 and an estimated cost of $0 for capital investment or maintenance and operational costs.

III. Are there changes in the estimates from the last approval?

There is a decrease of 1,451 hours in the total estimated respondent burden compared with that identified in the ICR currently approved by OMB. This decrease reflects EPA's estimate of a fewer number of potential respondents affected by the reporting requirement. This change is an adjustment.

IV. What is the next step in the process for this ICR?

EPA will consider the comments received and amend the ICR as appropriate. The final ICR package will then be submitted to OMB for review and approval pursuant to 5 CFR 1320.12. EPA will issue another **Federal Register** document pursuant to 5 CFR 1320.5(a)(1)(iv) to announce the submission of the ICR to OMB and the opportunity to submit additional comments to OMB. If you have any questions about this ICR or the approval process, please contact the technical person listed under **FOR FURTHER INFORMATION CONTACT**.

Authority: 44 U.S.C. 3501 *et seq.*

Dated: March 4, 2016.

James Jones,

Assistant Administrator, Office of Chemical Safety and Pollution Prevention.

[FR Doc. 2016–05466 Filed 3–9–16; 8:45 am]

BILLING CODE 6560–50–P

FEDERAL ELECTION COMMISSION

Sunshine Act Meeting

AGENCY: Federal Election Commission.

DATE & TIME: *Tuesday, March 15, 2016 at 10:00 a.m. and Wednesday, March 16, 2016 at the Conclusion of the Open Meeting.*

PLACE: 999 E Street NW., Washington, DC.

STATUS: This meeting will be closed to the public.

ITEMS TO BE DISCUSSED: Compliance matters pursuant to 52 U.S.C. 30109. Matters concerning participation in civil actions or proceeding, or arbitration.

* * * * *

PERSON TO CONTACT FOR INFORMATION: Judith Ingram, Press Officer, Telephone: (202) 694–1220.

Shelley E. Garr,

Deputy Secretary.

[FR Doc. 2016–05582 Filed 3–8–16; 4:15 pm]

BILLING CODE 6715–01–P

FEDERAL RESERVE SYSTEM

Change in Bank Control Notices; Acquisitions of Shares of a Bank or Bank Holding Company

The notificants listed below have applied under the Change in Bank Control Act (12 U.S.C. 1817(j)) and § 225.41 of the Board's Regulation Y (12 CFR 225.41) to acquire shares of a bank or bank holding company. The factors that are considered in acting on the notices are set forth in paragraph 7 of the Act (12 U.S.C. 1817(j)(7)).

The notices are available for immediate inspection at the Federal Reserve Bank indicated. The notices also will be available for inspection at the offices of the Board of Governors. Interested persons may express their views in writing to the Reserve Bank indicated for that notice or to the offices of the Board of Governors. Comments must be received not later than March 25, 2016.

A. Federal Reserve Bank of Dallas (Robert L. Triplett III, Senior Vice President) 2200 North Pearl Street, Dallas, Texas 75201–2272:

1. *Edward B. Tomlinson, II, Rowlett, Texas; and the Leis Family Group, comprised of The Revocable Trust of Dorvin D. Leis, Garland, Texas, Charles S. Leis, Eagle, Idaho, Stephen T. Leis, Kihie, Hawaii, and Edward B. Tomlinson, II, Rowlett, Texas, as trustees and in individual capacity; and Stanley B. Leis,* Eagle, Idaho, collectively; to retain voting shares of Texas Brand Bancshares, Inc., and thereby indirectly retain voting shares of Texas Brand Bank, both in Garland, Texas.

Board of Governors of the Federal Reserve System, March 7, 2016.

Michael J. Lewandowski,

Associate Secretary of the Board.

[FR Doc. 2016–05378 Filed 3–9–16; 8:45 am]

BILLING CODE 6210–01–P

GENERAL SERVICES ADMINISTRATION

[OMB Control No. 3090–0302; Docket 2016–0001; Sequence 2]

General Services Administration Acquisition Regulation; Information Collection; Modifications 552.238–81

AGENCY: Office of Acquisition Policy, General Services Administration (GSA).

ACTION: Notice of request for public comments regarding an extension to an existing OMB clearance.

SUMMARY: Under the provisions of the Paperwork Reduction Act, the Regulatory Secretariat Division will be submitting to the Office of Management and Budget (OMB) a request to review and approve an information collection requirement regarding the Modifications clause.

DATES: Submit comments on or before: May 9, 2016.

FOR FURTHER INFORMATION CONTACT: Ms. Dana Munson, Procurement Analyst, General Services Acquisition Policy Division, GSA, 202–357–9652 or email *dana.munson@gsa.gov.*

ADDRESSES: Submit comments identified by Information Collection 3090–0302, Modifications, by any of the following methods:

- *Regulations.gov: http://www.regulations.gov.*

Submit comments via the Federal eRulemaking portal by inputting ''Information Collection 3090–0302,

Modifications,'' under the heading ''Enter Keyword or ID'' and selecting ''Search''. Select the link ''Submit a Comment'' that corresponds with ''Information Collection 3090–0302, Modifications.'' Follow the instructions provided at the ''Submit a Comment'' screen. Please include your name, company name (if any), and ''Information Collection 3090–0302, Modifications,'' on your attached document.

• *Mail:* General Services Administration, Regulatory Secretariat (MVCB), 1800 F Street NW., Washington, DC 20405. ATTN: Ms. Flowers/IC 3090–0302, Modifications.

Instructions: Please submit comments only and cite Information Collection 3090–0302, Modifications, in all correspondence related to this collection. Comments received generally will be posted without change to *http://www.regulations.gov*, including any personal and/or business confidential information provided. To confirm receipt of your comment(s), please check *www.regulations.gov*, approximately two to three days after submission to verify posting (except allow 30 days for posting of comments submitted by mail).

SUPPLEMENTARY INFORMATION:

A. Purpose

The General Services Administration Acquisition Regulation (GSAR) clause 552.238–81 Modifications requires vendors to request a contract modification by submitting a request to the Contracting Officer for approval, except for electronic File updates. At a minimum, every request shall describe the proposed change(s) and provide the rationale for the requested change(s).

B. Annual Reporting Burden

Respondents: 19,500.
Responses per Respondent: 2.
Total Responses: 39,000.
Hours per Response: 5.
Total Burden Hours: 195,000.

C. Public Comments

Public comments are particularly invited on: Whether this collection of information is necessary and whether it will have practical utility; whether our estimate of the public burden of this collection of information is accurate, and based on valid assumptions and methodology; ways to enhance the quality, utility, and clarity of the information to be collected.

Obtaining Copies of Proposals: Requesters may obtain a copy of the information collection documents from the General Services Administration, Regulatory Secretariat Division (MVCB), 1800 F Street NW., Washington, DC 20405; telephone 202–501–4755. Please cite OMB Control No. 3090–0302, ''Modifications'' in all correspondence.

Jeffrey A. Koses,
Director, Office of Acquisition Policy, Office of Government-wide Policy.

[FR Doc. 2016–05392 Filed 3–9–16; 8:45 am]

BILLING CODE 6820–61–P

DEPARTMENT OF HEALTH AND HUMAN SERVICES

Centers for Disease Control and Prevention

[30Day–16–15XT]

Agency Forms Undergoing Paperwork Reduction Act Review

The Centers for Disease Control and Prevention (CDC) has submitted the following information collection request to the Office of Management and Budget (OMB) for review and approval in accordance with the Paperwork Reduction Act of 1995. The notice for the proposed information collection is published to obtain comments from the public and affected agencies.

Written comments and suggestions from the public and affected agencies concerning the proposed collection of information are encouraged. Your comments should address any of the following: (a) Evaluate whether the proposed collection of information is necessary for the proper performance of the functions of the agency, including whether the information will have practical utility; (b) Evaluate the accuracy of the agencies estimate of the burden of the proposed collection of information, including the validity of the methodology and assumptions used; (c) Enhance the quality, utility, and clarity of the information to be collected; (d) Minimize the burden of the collection of information on those who are to respond, including through the use of appropriate automated, electronic, mechanical, or other technological collection techniques or other forms of information technology, *e.g.,* permitting electronic submission of responses; and (e) Assess information collection costs.

To request additional information on the proposed project or to obtain a copy of the information collection plan and instruments, call (404) 639–7570 or send an email to *omb@cdc.gov.* Written comments and/or suggestions regarding the items contained in this notice should be directed to the Attention: CDC Desk Officer, Office of Management and Budget, Washington, DC 20503 or by fax to (202) 395–5806. Written comments should be received within 30 days of this notice.

Proposed Project

Enhancing Mine Workers' Abilities to Identify Hazards at Sand, Stone, and Gravel Mines—New—National Institute for Occupational Safety and Health (NIOSH), Centers for Disease Control and Prevention (CDC).

Background and Brief Description

According to the Mine Safety and Health Administration (MSHA), 37 mine workers were fatally injured in accidents that occurred at metal and nonmetal mine sites between October, 2013, and January, 2015 (MSHA, 2015). By contrast, prior to October, 2013, metal and nonmetal mining had experienced several years of record lows for number of fatalities (2012: 16 and 2011: 16). Yet, in 2014 alone, 29 mine workers were fatally injured at a metal or nonmetal mine site, and half of these fatalities (52%) occurred at a surface stone, sand, or gravel (SSG) mine.

It is critical that all miners be able to both recognize worksite hazards and accurately assess the risk associated with these hazards, because their health and safety depends on their deciding whether and how to remove hazards and mitigate risks.

In order to study how SSG mine workers' search for, find, and understand the risk associated with mine site hazards, a laboratory based quasi-experimental research study will be conducted. Over the two-year period of the study, a total of 85 respondents (45 mine workers, 20 safety professionals, and 20 students) will complete the pre-screening questionnaire. Each participant will be asked to complete each form one time. The pre-screening questionnaire will be used to determine which potential participants qualify to take part in the study. This questionnaire will be completed prior to the laboratory task and should take approximately 15 minutes for each respondent to complete. It is anticipated that at least 72% of the participants who are contacted will qualify and take part in the study. Therefore, a total of 62 respondents will take part in the study—30 mine workers, 16 safety professionals, and 16 mining students. We are interested in how experience (*e.g.,* work experience, hazard recognition training experience, etc.) affects hazard recognition abilities.

The laboratory study will be completed first. Participants will be shown panoramic images of typical locations at a surface stone mine site.

There will be a number of hazards included in each image. The participant will be asked to search for and find the hazards. During the study, all 62 participants will be asked to search pictures. The participants will wear a light weight eye-tracking system so that eye-movements can be collected and search patterns can be mapped during analysis to determine differences based on level of experience. Identification accuracy will also be collected to determine whether level of experience affects the number of hazards identified.

After the laboratory study is complete, all 62 respondents will complete the demographic questionnaire. This should take approximately six minutes for each respondent to complete. All 62 respondents will then complete the Risk Assessment Measure (time to complete, 20 minutes), the Risk Propensity Scale (time to complete, 6 minutes), the Mine Specific Risk Tolerance Measure (time to complete, 6 minutes), and the Open-ended Questions (time to complete, 30 minutes).

ESTIMATED ANNUALIZED BURDEN HOURS

Type of respondent	Form name	Number of respondents	Number responses per respondent	Average burden per response (in hours)
Mine Employee	Prescreening Questionnaire	23	1	15/60
Safety Professional		10		
Student		10		
Mine Employee	Demographic Questionnaire	15	1	6/60
Safety Professional		8		
Student		8		
Mine Employee	Experimental Task	15	1	1
Safety Professional		8		
Student		8		
Mine Employee	Risk Assessment Measure	15	1	20/60
Safety Professional		8		
Student		8		
Mine Employee	Risk Propensity Scale	15	1	6/60
Safety Professional		8		
Student		8		
Mine Employee	Mine Specific Risk Tolerance Measure	15	1	6/60
Safety Professional		8		
Student		8		
Mine Employee	Open Ended Questions	15	1	30/60
Safety Professional		8		
Student		8		

Leroy A. Richardson,

Chief, Information Collection Review Office Office of Scientific Integrity Office of the Associate Director for Science Office of the Director Centers for Disease Control and Prevention.

[FR Doc. 2016–05358 Filed 3–9–16; 8:45 am]

BILLING CODE 4163–18–P

DEPARTMENT OF HEALTH AND HUMAN SERVICES

Administration for Children and Families

Submission for OMB Review; Comment Request

Title: ANA Project Impact Assessment Survey.

OMB No.: 0970–0379.

Description: The information collected by the Project Impact Assessment Survey is needed for two main reasons: (1) To collect crucial information required to report on the Administration for Native Americans' (ANA) established Government Performance and Results Act (GPRA) measures, and (2) to properly abide by ANA's congressionally-mandated statute (42 United States Code 2991 *et seq.*) found within the Native American Programs Act of 1974, as amended, which states that ANA will evaluate projects assisted through ANA grant dollars ''including evaluations that describe and measure the impact of such projects, their effectiveness in achieving stated goals, their impact on related programs, and their structure and mechanisms for delivery of services.'' The information collected with this survey will fulfill ANA's statutory requirement and will also serve as an important planning and performance tool for ANA.

Respondents

ANNUAL BURDEN ESTIMATES

Instrument	Number of respondents	Number of responses per respondent	Average burden hours per response	Total burden hours
ANA Project Impact Assessment Survey	85	1	6	510
Estimated Total Annual Burden Hours				510

Additional Information

Copies of the proposed collection may be obtained by writing to the Administration for Children and Families, Office of Planning, Research and Evaluation, 330 C Street SW., Washington, DC 20201. Attention Reports Clearance Officer. All requests should be identified by the title of the information collection. Email address: *infocollection@acf.hhs.gov.*

OMB Comment

OMB is required to make a decision concerning the collection of information between 30 and 60 days after publication of this document in the **Federal Register**. Therefore, a comment is best assured of having its full effect if OMB receives it within 30 days of publication. Written comments and recommendations for the proposed information collection should be sent directly to the following: Office of Management and Budget, Paperwork Reduction Project, Email: *OIRA_SUBMISSION@OMB.EOP.GOV*, Attn: Desk Officer for the Administration for Children and Families.

Robert Sargis,

Reports Clearance Officer.

[FR Doc. 2016–05291 Filed 3–9–16; 8:45 am]

BILLING CODE 4184–01–P

DEPARTMENT OF HEALTH AND HUMAN SERVICES

Food and Drug Administration

[Docket No. FDA–2010–D–0319]

Agency Information Collection Activities; Comment Request; Guidance for Industry and Food and Drug Administration Staff on Dear Health Care Provider Letters: Improving Communication of Important Safety Information

AGENCY: Food and Drug Administration, HHS.

ACTION: Notice.

SUMMARY: The Food and Drug Administration (FDA) is announcing an opportunity for public comment on the proposed collection of certain information by the Agency. Under the Paperwork Reduction Act of 1995 (the PRA), Federal Agencies are required to publish notice in the **Federal Register** concerning each proposed collection of information, including each proposed extension of an existing collection of information, and to allow 60 days for public comment in response to the notice. This notice solicits comments on the information collection associated with the guidance for industry and FDA staff entitled ''Dear Health Care Provider Letters: Improving Communication of Important Safety Information.'' This guidance offers specific recommendations to industry on the content and format of Dear Health Care Provider (DHCP) letters. These letters are sent by manufacturers or distributors to health care providers to communicate an important drug warning, a change in prescribing information, or a correction of misinformation in prescription drug promotional labeling or advertising. This guidance provides recommendations on when to use a DHCP letter, the types of information to include in the DHCP letter, how to organize the information so that it is communicated effectively to health care providers, and formatting techniques to make the information more accessible.

DATES: Submit either electronic or written comments on the collection of information by May 9, 2016.

ADDRESSES: You may submit comments as follows:

Electronic Submissions

Submit electronic comments in the following way:

- *Federal eRulemaking Portal: http://www.regulations.gov.* Follow the instructions for submitting comments. Comments submitted electronically, including attachments, to *http://www.regulations.gov* will be posted to the docket unchanged. Because your comment will be made public, you are solely responsible for ensuring that your comment does not include any confidential information that you or a third party may not wish to be posted, such as medical information, your or anyone else's Social Security number, or confidential business information, such as a manufacturing process. Please note that if you include your name, contact information, or other information that identifies you in the body of your comments, that information will be posted on *http://www.regulations.gov.*
- If you want to submit a comment with confidential information that you do not wish to be made available to the public, submit the comment as a written/paper submission and in the manner detailed (see ''Written/Paper Submissions'' and ''Instructions'').

Written/Paper Submissions

Submit written/paper submissions as follows:

- Mail/Hand delivery/Courier (for written/paper submissions): Division of Dockets Management (HFA–305), Food and Drug Administration, 5630 Fishers Lane, Rm. 1061, Rockville, MD 20852.
- For written/paper comments submitted to the Division of Dockets Management, FDA will post your comment, as well as any attachments, except for information submitted, marked and identified, as confidential, if submitted as detailed in ''Instructions.''

Instructions: All submissions received must include the Docket No. FDA–2010–D–0319 for Guidance for Industry and Food and Drug Administration Staff on Dear Health Care Provider Letters: Improving Communication of Important Safety Information. Received comments will be placed in the docket and, except for those submitted as ''Confidential Submissions,'' publicly viewable at *http://www.regulations.gov* or at the Division of Dockets Management between 9 a.m. and 4 p.m., Monday through Friday.

- Confidential Submissions—To submit a comment with confidential information that you do not wish to be made publicly available, submit your comments only as a written/paper submission. You should submit two copies total. One copy will include the information you claim to be confidential with a heading or cover note that states ''THIS DOCUMENT CONTAINS CONFIDENTIAL INFORMATION''. The Agency will review this copy, including the claimed confidential information, in its consideration of comments. The second copy, which will have the claimed confidential information redacted/blacked out, will be available for public viewing and posted on *http://www.regulations.gov.* Submit both copies to the Division of Dockets Management. If you do not wish your name and contact information to be made publicly available, you can provide this information on the cover sheet and not in the body of your comments and you must identify this information as ''confidential.'' Any information marked as ''confidential'' will not be disclosed except in accordance with 21 CFR 10.20 and other applicable disclosure law. For more information about FDA's posting of comments to public dockets, see 80 FR 56469, September 18, 2015, or access the information at: *http://www.fda.gov/regulatoryinformation/dockets/default.htm.*

Docket: For access to the docket to read background documents or the electronic and written/paper comments received, go to *http://www.regulations.gov* and insert the docket number, found in brackets in the heading of this document, into the ''Search'' box and follow the prompts and/or go to the Division of Dockets

Management, 5630 Fishers Lane, Rm. 1061, Rockville, MD 20852.

FOR FURTHER INFORMATION CONTACT: FDA PRA Staff, Office of Operations, Food and Drug Administration, 8455 Colesville Rd., COLE–14526, Silver Spring, MD 20993–0002, *PRAStaff@fda.hhs.gov.*

SUPPLEMENTARY INFORMATION: Under the PRA (44 U.S.C. 3501–3520), Federal Agencies must obtain approval from the Office of Management and Budget (OMB) for each collection of information they conduct or sponsor. ''Collection of information'' is defined in 44 U.S.C. 3502(3) and 5 CFR 1320.3(c) and includes Agency requests or requirements that members of the public submit reports, keep records, or provide information to a third party. Section 3506(c)(2)(A) of the PRA (44 U.S.C. 3506(c)(2)(A)) requires Federal Agencies to provide a 60-day notice in the **Federal Register** concerning each proposed collection of information, including each proposed extension of an existing collection of information, before submitting the collection to OMB for approval. To comply with this requirement, FDA is publishing notice of the proposed collection of information set forth in this document.

With respect to the following collection of information, FDA invites comments on these topics: (1) Whether the proposed collection of information is necessary for the proper performance of FDA's functions, including whether the information will have practical utility; (2) the accuracy of FDA's estimate of the burden of the proposed collection of information, including the validity of the methodology and assumptions used; (3) ways to enhance the quality, utility, and clarity of the information to be collected; and (4) ways to minimize the burden of the collection of information on respondents, including through the use of automated collection techniques, when appropriate, and other forms of information technology.

Guidance for Industry and Food and Drug Administration Staff on Dear Health Care Provider Letters: Improving Communication of Important Safety Information OMB Control Number 0910–0754—Extension

This final Guidance for Industry and FDA staff entitled ''Dear Health Care Provider Letters: Improving Communication of Important Safety Information'' offers specific guidance to industry and FDA staff on the content and format of Dear Health Care Provider (DHCP) letters. These letters are sent by manufacturers or distributors to health care providers to communicate an important drug warning, a change in prescribing information, or a correction of misinformation in prescription drug promotional labeling or advertising.

This guidance gives specific instruction on what should and should not be included in DHCP letters. To date, some DHCP letters have been too long, have contained promotional material, or otherwise have not met the goals set forth in the applicable regulation (21 CFR 200.5). In some cases, health care providers have not been aware of important new information, and have been unable to communicate it to patients, because the letters' content and length have made it difficult to find the relevant information. In addition, letters have sometimes been sent for the wrong reasons.

In addition to content and format recommendations for each type of DHCP letter, the guidance also includes advice on consulting with FDA to develop a DHCP letter, when to send a letter, what type of letter to send, and conducting an assessment of the letter's impact.

Based on a review of FDA's Document Archiving, Reporting, and Regulatory Tracking System for 2012–2015, we identified DHCP letters that were sent and the identity of each sponsor sending out a DHCP letter for each year. We estimate that we will receive approximately 25 DHCP Letters annually from approximately 18 application holders. FDA professionals familiar with DHCP letters and with the recommendations in the guidance estimate that it should take an application holder approximately 100 hours to prepare and send DHCP letters in accordance with the guidance.

FDA estimates the annual reporting burden of this collection of information as follows:

TABLE 1—ESTIMATED ANNUAL REPORTING BURDEN [1]

Activity	Number of respondents	Number of responses per respondent	Total annual responses	Average burden per response	Total hours
Annual Average	18	1.4	25	100 hours	2,500

[1] There are no capital costs or operating and maintenance costs associated with this collection of information.

Dated: March 3, 2016.

Leslie Kux,

Associate Commissioner for Policy.

[FR Doc. 2016–05301 Filed 3–9–16; 8:45 am]

BILLING CODE 4164–01–P

DEPARTMENT OF HEALTH AND HUMAN SERVICES

Food and Drug Administration

[Docket No. FDA–2012–N–0477]

Agency Information Collection Activities; Submission for Office of Management and Budget Review; Comment Request; Investigational Device Exemptions Reports and Records

AGENCY: Food and Drug Administration, HHS.

ACTION: Notice.

SUMMARY: The Food and Drug Administration (FDA) is announcing that a proposed collection of information has been submitted to the Office of Management and Budget (OMB) for review and clearance under the Paperwork Reduction Act of 1995.

DATES: Fax written comments on the collection of information by April 11, 2016.

ADDRESSES: To ensure that comments on the information collection are received, OMB recommends that written comments be faxed to the Office of Information and Regulatory Affairs, OMB, Attn: FDA Desk Officer, FAX: 202–395–7285, or emailed to *oira_submission@omb.eop.gov.* All comments should be identified with the OMB control number 0910–0078. Also

include the FDA docket number found in brackets in the heading of this document.

FOR FURTHER INFORMATION CONTACT: FDA PRA Staff, Office of Operations, Food and Drug Administration, 8455 Colesville Rd., COLE–14526, Silver Spring, MD 20993–0002, *PRAStaff@fda.hhs.gov.*

SUPPLEMENTARY INFORMATION: In compliance with 44 U.S.C. 3507, FDA has submitted the following proposed collection of information to OMB for review and clearance.

Investigational Device Exemptions Reports and Records— OMB Control Number 0910–0078—Extension

Section 520(g) of the Federal Food, Drug, and Cosmetic Act (the FD&C Act) (21 U.S.C. 360j(g)) establishes the statutory authority to collect information regarding investigational devices, and establishes rules under which new medical devices may be tested using human subjects in a clinical setting. The Food and Drug Administration Modernization Act of 1997 (Pub. L. 105–115) added section 520(g)(6) to the FD&C Act and permitted changes to be made to either the investigational device or to the clinical protocol without FDA approval of an investigational device exemption (IDE) supplement. An IDE allows a device, which would otherwise be subject to provisions of the FD&C Act, such as premarket notification or premarket approval, to be used in investigations involving human subjects in which the safety and effectiveness of the device is being studied. The purpose of part 812 (21 CFR part 812) is to encourage, to the extent consistent with the protection of public health and safety and with ethical standards, the discovery and development of useful devices intended for human use. The IDE regulation is designed to encourage the development of useful medical devices and allow investigators the maximum freedom possible, without jeopardizing the health and safety of the public or violating ethical standards. To do this, the regulation provides for different levels of regulatory control, depending on the level of potential risk the investigational device presents to human subjects.

Investigations of significant risk devices, ones that present a potential for serious harm to the rights, safety, or welfare of human subjects, are subject to the full requirements of the IDE regulation. Nonsignificant risk device investigations, *i.e.,* devices that do not present a potential for serious harm, are subject to the reduced burden of the abbreviated requirements. The regulation also includes provisions for treatment IDEs. The purpose of these provisions is to facilitate the availability, as early in the device development process as possible, of promising new devices to patients with life-threatening or serious conditions for which no comparable or satisfactory alternative therapy is available. Section 812.10 permits the sponsor of the IDE to request a waiver to all of the requirements of part 812. This information is needed for FDA to determine if waiver of the requirements of part 812 will impact the public's health and safety. Sections 812.20, 812.25, and 812.27 consist of the information necessary to file an IDE application with FDA. The submission of an IDE application to FDA is required only for significant risk device investigations.

Section 812.20 lists the data requirements for the original IDE application, § 812.25 lists the contents of the investigational plan; and § 812.27 lists the data relating to previous investigations or testing. The information in the original IDE application is evaluated by the Center for Devices and Radiological Health to determine whether the proposed investigation will reasonably protect the public health and safety, and for FDA to make a determination to approve the IDE.

Upon approval of an IDE application by FDA, a sponsor must submit certain requests and reports. Under § 812.35, a sponsor who wishes to make a change in the investigation that affects the scientific soundness of the study or the rights, safety, or welfare of the subjects, is required to submit a request for the change to FDA. Section 812.150 requires a sponsor to submit reports to FDA. These requests and reports are submitted to FDA as supplemental applications. This information is needed for FDA to assure protection of human subjects and to allow review of the study's progress. Section 812.36(c) identifies the information necessary to file a treatment IDE application. FDA uses this information to determine if wider distribution of the device is in the interest of the public health. Section 812.36(f) identifies the reports required to allow FDA to monitor the size and scope of the treatment IDE, to assess the sponsor's due diligence in obtaining marketing clearance of the device, and to ensure the integrity of the controlled clinical trials.

Section 812.140 lists the recordkeeping requirements for investigators and sponsors. FDA requires this information for tracking and oversight purposes. Investigators are required to maintain records, including correspondence and reports concerning the study, records of receipt, use or disposition of devices, records of each subject's case history and exposure to the device, informed consent documentation, study protocol, and documentation of any deviation from the protocol. Sponsors are required to maintain records including correspondence and reports concerning the study, records of shipment and disposition, signed investigator agreements, adverse device effects information, and, for a nonsignificant risk device study, an explanation of the nonsignificant risk determination, records of device name and intended use, study objectives, investigator information, investigational review board information, and statement on the extent that good manufacturing practices will be followed.

For a nonsignificant risk device investigation, the investigators' and sponsors' recordkeeping and reporting burden is reduced. Pertinent records on the study must be maintained by both parties, and reports are made to sponsors and institutional review boards (IRBs). Reports are made to FDA only in certain circumstances, *e.g.,* recall of the device, the occurrence of unanticipated adverse effects, and as a consequence of certain IRB actions. The estimate of the burden is based on the number of IDEs received in recent years.

In the **Federal Register** of October 28, 2015 (80 FR 66009), FDA published a 60-day notice requesting public comment on the proposed collection of information. No comments were received.

FDA estimates the burden of this collection of information as follows:

TABLE 1—ESTIMATED ANNUAL REPORTING BURDEN [1]

Activity/21 CFR section	Number of respondents	Number of responses per respondent	Total annual responses	Average burden per response	Total hours
Waivers—812.10	1	1	1	1	1
IDE Application—812.20, 812.25, and 812.27	219	1	219	80	17,520
Supplements—812.35 and 812.150	579	6	3,474	6	20,844
Treatment IDE Applications—812.36(c)	1	1	1	120	120
Treatment IDE Reporting—812.36(f)	1	1	1	20	20
Total					38,505

[1] There are no capital costs or operating and maintenance costs associated with this collection of information.

TABLE 2—ESTIMATED ANNUAL RECORDKEEPING BURDEN [1]

Activity/21 CFR section	Number of recordkeepers	Number of records per recordkeeper	Total annual records	Average burden per recordkeeping	Total hours
Original—812.140	219	1	219	10	2,190
Supplemental—812.140	579	6	3,747	1	3,474
Nonsignificant—812.140	356	1	356	6	2,136
Total					7,800

[1] There are no capital costs or operating and maintenance costs associated with this collection of information.

TABLE 3—ESTIMATED ANNUAL THIRD-PARTY DISCLOSURE BURDEN [1]

Activity/21 CFR section	Number of respondents	Number of disclosures per respondent	Total annual disclosures	Average burden per disclosure	Total hours
Reports for Nonsignificant Risk Studies—812.150	1	1	1	6	6

[1] There are no capital costs or operating and maintenance costs associated with this collection of information.

The estimated annual reporting burden for this extension has decreased to 38,505 hours (previously 54,253 hours) as the result of a decrease in the average number of applications and supplements submitted. For the same reason, the recordkeeping burden has decreased to 7,800 hours (previously 9,968). The previous approved total burden hours of 64,227, have therefore decreased by 17,916 to 46,311.

Dated: March 4, 2016.

Leslie Kux,

Associate Commissioner for Policy.

[FR Doc. 2016–05385 Filed 3–9–16; 8:45 am]

BILLING CODE 4164–01–P

DEPARTMENT OF HEALTH AND HUMAN SERVICES

Food and Drug Administration

[Docket No. FDA–2015–N–0986]

Center for Devices and Radiological Health: Experiential Learning Program

AGENCY: Food and Drug Administration, HHS.

ACTION: Notice of availability.

SUMMARY: The Food and Drug Administration's (FDA) Center for Devices and Radiological Health (CDRH or Center) is announcing the 2016 Experiential Learning Program (ELP). This training component is intended to provide CDRH staff with an opportunity to understand the policies, laboratory practices, and challenges faced in broader disciplines that impact the device development life cycle. The purpose of this document is to invite medical device industry, academia, and health care facilities to request to participate in this formal training program for FDA's medical device review staff, or to contact CDRH for more information regarding the ELP.

DATES: Submit either an electronic or written request for participation in the ELP by April 11, 2016.

ADDRESSES: Submit either electronic requests to *http://www.regulations.gov* or written requests to the Division of Dockets Management (HFA–305), Food and Drug Administration, 5630 Fishers Lane, Rm. 1061, Rockville, MD 20852. Identify requests with the docket number found in brackets in the heading of this document.

FOR FURTHER INFORMATION CONTACT: Christian Hussong, Center for Devices and Radiological Health, Food and Drug Administration, 10903 New Hampshire Ave., Bldg. 32, Rm. 5261, Silver Spring, MD 20993–0002, 240–402–2246, FAX: 301–827–3079, *Christian.Hussong@fda.hhs.gov.*

SUPPLEMENTARY INFORMATION:

I. Background

CDRH is responsible for helping to ensure the safety and effectiveness of medical devices marketed in the United States. Furthermore, CDRH assures that patients and providers have timely and continued access to high-quality, safe, and effective medical devices. In support of this mission, the Center launched various training and development initiatives to enhance performance of its staff involved in regulatory review and in the premarket review process. One of these initiatives, the ELP Pilot, was launched in 2012 and fully implemented on April 2, 2013 (78 FR 19711).

CDRH is committed to advancing regulatory science, providing industry with predictable, consistent, transparent, and efficient regulatory pathways, and helping to ensure consumer confidence in medical devices marketed in the United States

and throughout the world. The ELP is intended to provide CDRH staff with an opportunity to understand the policies, laboratory practices, and challenges faced in broader disciplines that impact the device development life cycle. This component is a collaborative effort to enhance communication and facilitate the premarket review process. Furthermore, CDRH is committed to understanding current industry practices, innovative technologies, regulatory impacts, and regulatory needs.

These formal training visits are not intended for FDA to inspect, assess, judge, or perform a regulatory function (*e.g.,* compliance inspection), but rather, they are an opportunity to provide CDRH review staff a better understanding of the products they review. Through this notice, CDRH is formally requesting participation from companies, academia, and clinical facilities, including those that have previously participated in the ELP or other FDA site visit programs.

II. CDRH ELP

A. Areas of Interest

In this training program, groups of CDRH staff will observe operations at research, manufacturing, academia, and health care facilities. The focus areas and specific areas of interest for visits may include the following:

TABLE 1—AREAS OF INTEREST—OFFICE OF DEVICE EVALUATION

Focus area	Specific areas of interest
Usability testing	Observe usability testing throughout a device's life cycle and complex clinical simulations.
Reprocessing and reuse of single-use devices (SUDs)	Observe reprocessing and reuse of SUDs in a major health system (*i.e.* Hospital Reprocessor).
Transcatheter heart valves	Observe design, development, and testing of transcatheter heart valves, including pulmonic and aortic valve prostheses and related technology.
Cardiac electrophysiology (EP) diagnostic, mapping, and ablation devices.	Observe clinical EP catheter laboratory and observe catheter ablation procedures (manual and potentially robotic); including EP Lab manager and practicing EP physicians.
Neurological medical devices—early feasibility clinical trials	Design, development, and testing of novel neurological medical devices qualified under early feasibility clinical trials.
Neurostimulators and neuroprosthetics including brain-to-computer interface (BCI).	Design, development, and testing of neurostimulators and neuroprosthetics including BCI technologies.
Non-clinical testing—animal model	Observe non-clinical animal model testing demonstrating the performance of bone void fillers in the posterolateral spine.
Patient matched orthopaedic implants	Observe the patient matched process from the surgeon's decision to utilize patient matched technology through surgery.
Auditory brainstem implants (ABI)	Design, development, and testing of ABI and observe the surgical procedure and a post-implant programming session.
Contact lens care products	Design, development, and testing of contact lens care products and observe non-clinical testing for these devices.
Surgical mesh devices	Design, development, and testing of surgical mesh indicated for gynecologic and urologic indications.
Feeding tubes	Design, development, and testing of nasogastric tubes, nasojejunal tubes, and percutaneous endoscopic gastrostomy tubes.
Robotically-assisted surgical devices (RASD) and surgical simulators in robotic surgery.	Design, development, testing, and validation of emerging RASD and mechanized laparoscopic technologies adopted from other specialties and new-area specific; and surgical simulators incorporating tissue models and force feedback mechanism or haptic technology to reduce learning curve in robotic surgery.
Biological evaluation (*i.e.,* biocompatibility) and viral inactivation of medical devices.	Observe all implanted, surface contacting, and external communicating devices.

TABLE 2—AREAS OF INTEREST—OFFICE OF IN VITRO DIAGNOSTICS AND RADIOLOGICAL HEALTH

Focus area	Specific areas of interest
Continuous glucose monitoring systems and insulin pumps	Design and development in-process, and finished device testing of continuous glucose monitoring systems and insulin pumps.
Urine test strips and readers	Design and development in-process, and finished device testing of urine test strips and readers.
Prothrombin (PT)/international normalized ratio (INR) devices	Design and development in-process, and finished device testing of PT/INR devices.
Direct anticoagulants (detection)	Observe the detection of direct anticoagulants.
Antimicrobial susceptibility testing (phenotypic, biochemical, and molecular detection).	Observe clinical microbiology laboratory, contract research organization (CRO), and/or industrial setting where antimicrobial susceptibility testing is being applied.
Next generation sequencing (NGS)	Observe clinical microbiology laboratory, CRO, and/or industrial setting where NGS is being applied.
Immunohistochemistry (IHC) reagents or digital pathology devices	Design, development, and testing of IHC reagents or digital pathology devices that are commonly used in pathology labs.
Cell-free DNA/RNA biomarker technology	Observe Clinical Laboratory Improvement Amendments labs involved with cfDNA, ctDNA, or miRNA for clinical diagnostics.
Radiological imaging equipment testing	Observe radiological imaging equipment (*e.g.* CT, MR, PET, fluoroscopy, etc.) testing and evaluation of particular consensus standards.

TABLE 2—AREAS OF INTEREST—OFFICE OF IN VITRO DIAGNOSTICS AND RADIOLOGICAL HEALTH—Continued

Focus area	Specific areas of interest
Radiation therapy equipment	Observe radiation therapy equipment (*e.g.,* linear accelerator, proton beam therapy, brachytherapy) testing and evaluation.

B. Site Selection

CDRH will be responsible for CDRH staff travel expenses associated with the site visits. CDRH will not provide funds to support the training provided by the site to the ELP. Selection of potential facilities will be based on CDRH's priorities for staff training and resources available to fund this program. In addition to logistical and other resource factors, all sites must have a successful compliance record with FDA or another Agency with which FDA has a memorandum of understanding. If a site visit involves a visit to a separate physical location of another firm under contract with the site, that firm must agree to participate in the ELP and must also have a satisfactory compliance history.

III. Request To Participate

Submit requests for participation with the docket number found in the brackets in the heading of this document. Received requests may be seen in the Division of Dockets Management (see **ADDRESSES**) between 9 a.m. and 4 p.m., Monday through Friday.

The request should include a description of your facility relative to focus areas described in table 1 or 2. Please include the Area of Interest (see table 1 or 2) that the site visit will demonstrate to CDRH staff, a contact person, site visit location(s), length of site visit, proposed dates, and maximum number of CDRH staff that can be accommodated during a site visit. Requests submitted without this minimum information will not be considered.

Additional information regarding the CDRH ELP, including a sample request and an example of the site visit agenda, is available on CDRH's Web site at: *http://www.fda.gov/scienceresearch/sciencecareeropportunities/ucm380676.htm.*

Dated: March 4, 2016.

Leslie Kux,

Associate Commissioner for Policy.

[FR Doc. 2016–05387 Filed 3–9–16; 8:45 am]

BILLING CODE 4164–01–P

DEPARTMENT OF HEALTH AND HUMAN SERVICES

Food and Drug Administration

[Docket No. FDA–2012–N–0976]

Agency Information Collection Activities; Submission for Office of Management and Budget Review; Comment Request; Guidance: Emergency Use Authorization of Medical Products

AGENCY: Food and Drug Administration, HHS.

ACTION: Notice.

SUMMARY: The Food and Drug Administration (FDA) is announcing that a proposed collection of information has been submitted to the Office of Management and Budget (OMB) for review and clearance under the Paperwork Reduction Act of 1995.

DATES: Fax written comments on the collection of information by April 11, 2016.

ADDRESSES: To ensure that comments on the information collection are received, OMB recommends that written comments be faxed to the Office of Information and Regulatory Affairs, OMB, Attn: FDA Desk Officer, FAX: 202–395–7285, or emailed to *oira_submission@omb.eop.gov.* All comments should be identified with the OMB control number 0910–0595. Also include the FDA docket number found in brackets in the heading of this document.

FOR FURTHER INFORMATION CONTACT: FDA PRA Staff, Office of Operations, Food and Drug Administration, 8455 Colesville Rd., COLE–14526, Silver Spring, MD 20993–0002, *PRAStaff@fda.hhs.gov.*

SUPPLEMENTARY INFORMATION: In compliance with 44 U.S.C. 3507, FDA has submitted the following proposed collection of information to OMB for review and clearance.

Emergency Use Authorization of Medical Products and Related Authorities; Guidance for Industry and Public Health Stakeholders OMB Control Number 0910–0595–Extension

The guidance describes the Agency's general recommendations and procedures for issuance of emergency use authorizations (EUA) under section 564 of the Federal Food, Drug, and Cosmetic Act (the FD&C Act) (21 U.S.C. 360bbb–3), which was amended by the Project BioShield Act of 2004 (Pub. L. 108–276). The FD&C Act permits the Commissioner to authorize the use of unapproved medical products or unapproved uses of approved medical products during an emergency declared under section 564 of the FD&C Act. The data to support issuance of an EUA must demonstrate that, based on the totality of the scientific evidence available to the Commissioner, including data from adequate and well-controlled clinical trials (if available), it is reasonable to believe that the product may be effective in diagnosing, treating, or preventing a serious or life-threatening disease or condition (21 U.S.C. 360bbb–3(c)). Although the exact type and amount of data needed to support an EUA may vary depending on the nature of the declared emergency and the nature of the candidate product, FDA recommends that a request for consideration for an EUA include scientific evidence evaluating the product's safety and effectiveness, including the adverse event profile for diagnosis, treatment, or prevention of the serious or life-threatening disease or condition, as well as data and other information on safety, effectiveness, risks and benefits, and (to the extent available) alternatives.

Under section 564 of the FD&C Act, the FDA Commissioner may establish conditions on the authorization. Section 564(e) requires the FDA Commissioner (to the extent practicable given the circumstances of the emergency) to establish certain conditions on an authorization that the Commissioner finds necessary or appropriate to protect the public health and permits the FDA Commissioner to establish other conditions that she finds necessary or appropriate to protect the public health. Conditions authorized by section 564(e) of the FD&C Act include, for example: Requirements for information dissemination to health care providers or authorized dispensers and product recipients; adverse event monitoring and reporting; data collection and analysis; recordkeeping and records access; restrictions on product advertising, distribution, and

administration; and limitations on good manufacturing practices requirements. Some conditions, the statute specifies, are mandatory to the extent practicable for authorizations of unapproved products and discretionary for authorizations of unapproved uses of approved products. Moreover, some conditions may apply to manufacturers of an EUA product, while other conditions may apply to any person who carries out any activity for which the authorization is issued. Section 564 of the FD&C Act also gives the FDA Commissioner authority to establish other conditions on an authorization that she finds to be necessary or appropriate to protect the public health.

For purposes of estimating the annual burden of reporting (table 1), FDA has established four categories of respondents: (1) Those who file a request for FDA to issue an EUA or a substantive amendment to an EUA that has previously been issued, assuming that a requisite declaration under section 564 of the FD&C Act has been made and criteria for issuance have been met; (2) those who submit a request for FDA to review information/data (*i.e.,* a pre-EUA package) for a candidate EUA product or a substantive amendment to an existing pre-EUA package for preparedness purposes; (3) manufacturers who carry out an activity related to an unapproved EUA product (*e.g.,* administering product, disseminating information) who must report to FDA regarding such activity; and (4) public health authorities (*e.g.,* State, local) who carry out an activity (*e.g.,* administering product, disseminating information) related to an unapproved EUA product who must report to FDA regarding such activity.

In some cases, manufacturers directly submit EUA requests. Often a Federal Government entity (*e.g.,* the Centers for Disease Control and Prevention, Department of Defense) requests that FDA issue an EUA and submits pre-EUA packages for FDA to review. In many of these cases, manufacturer respondents inform these requests and submissions, which are the activities that form the basis of the estimated reporting burdens. However, in some cases the Federal Government is the sole respondent; manufacturers do not inform these requests or submissions. FDA estimates minimal burden when the Federal Government performs the relevant activities. In addition to variability based on whether there is an active manufacturer respondent, other factors also inject significant variability in estimates for annual reporting burdens. A second factor is the type of product. For example, FDA estimates greater burden for novel therapeutics than for certain unapproved uses of approved products. A third significant factor that injects variability is the type of submission. For example, FDA estimates greater burden for ''original'' EUA and pre-EUA submissions than for amendments to them, and FDA estimates minimal burden to issue an EUA when there is a previously reviewed pre-EUA package or investigational application. For purposes of estimating the reporting burden, FDA has calculated the anticipated burden on manufacturers based on the anticipated types of responses (*i.e.,* estimated manufacturer input), types of product, and types of submission that comprise the described reporting activities.

For purposes of estimating the annual burden of recordkeeping, FDA has also calculated the anticipated burden on manufacturers and public health officials associated with administration of unapproved products authorized for emergency use, recognizing that the Federal Government will perform much of the recordkeeping related to administration of such products (table 2).

No burden was attributed to reporting or recordkeeping for unapproved uses of approved products, since those products are already subject to approved collections of information (*i.e.,* adverse experience reporting for biological products is approved under OMB control number 0910–0308 through February 28, 2018; adverse drug experience reporting is approved under OMB control number 0910–0230 through December 31, 2018; adverse device experience reporting is approved under OMB control number 0910–0471 through May 31, 2017; investigational new drug application regulations are approved under OMB control number 0910–0014 through February 28, 2019; and investigational device exemption reporting is approved under OMB control number 0910–0078 through March 31, 2016). Any additional burden imposed by this proposed collection would be minimal.

In the **Federal Register** of December 23, 2015 (80 FR 79905), FDA published a 60-day notice requesting public comment on the proposed collection of information. No comments were received.

FDA estimates the burden of this collection of information as follows:

TABLE 1—ESTIMATED ANNUAL REPORTING BURDEN [1]

Type of respondent	Number of respondents	Number of responses per respondent	Total annual responses	Average burden per response	Total hours
Manufacturer, Request to Issue an EUA or a Substantive Amendment to an Existing EUA	6	3	18	45	810
Manufacturer, Request for FDA Review of a Pre-EUA Package or an Amendment Thereto	13	6	78	34	2,652
Manufacturer of an Unapproved EUA Product; Conditions of Authorization	5	2	10	2	20
Public Health Authority; Unapproved EUA Product; Conditions of Authorization	30	3	90	2	180
Total					3,662

[1] There are no capital costs or operating and maintenance costs associated with this collection of information.

TABLE 2—ESTIMATED ANNUAL RECORDKEEPING BURDEN [1]

Type of respondent	Number of recordkeepers	Number of records per recordkeeper	Total annual records	Average burden per recordkeeping	Total hours
Manufacturers of an Unapproved EUA Product	5	2	10	25	250

TABLE 2—ESTIMATED ANNUAL RECORDKEEPING BURDEN [1]—Continued

Type of respondent	Number of recordkeepers	Number of records per recordkeeper	Total annual records	Average burden per recordkeeping	Total hours
Public Health Authorities; Unapproved EUA Product	30	3	90	3	270
Total					520

[1] There are no capital costs or operating and maintenance costs associated with this collection of information.

Dated: March 7, 2016.

Leslie Kux,

Associate Commissioner for Policy.

[FR Doc. 2016–05390 Filed 3–9–16; 8:45 am]

BILLING CODE 4164–01–P

DEPARTMENT OF HEALTH AND HUMAN SERVICES

Food and Drug Administration

[Docket No. FDA–2014–E–2349]

Determination of Regulatory Review Period for Purposes of Patent Extension; OPSUMIT

AGENCY: Food and Drug Administration, HHS.

ACTION: Notice.

SUMMARY: The Food and Drug Administration (FDA) has determined the regulatory review period for OPSUMIT and is publishing this notice of that determination as required by law. FDA has made the determination because of the submission of an application to the Director of the U.S. Patent and Trademark Office (USPTO), Department of Commerce, for the extension of a patent which claims that human drug product.

DATES: Anyone with knowledge that any of the dates as published (in the **SUPPLEMENTARY INFORMATION** section) are incorrect may submit either electronic or written comments and ask for a redetermination by May 9, 2016. Furthermore, any interested person may petition FDA for a determination regarding whether the applicant for extension acted with due diligence during the regulatory review period by September 6, 2016. See ''Petitions'' in the **SUPPLEMENTARY INFORMATION** section for more information.

ADDRESSES: You may submit comments as follows:

Electronic Submissions

Submit electronic comments in the following way:

• *Federal eRulemaking Portal: http://www.regulations.gov.* Follow the instructions for submitting comments. Comments submitted electronically, including attachments, to *http://www.regulations.gov* will be posted to the docket unchanged. Because your comment will be made public, you are solely responsible for ensuring that your comment does not include any confidential information that you or a third party may not wish to be posted, such as medical information, your or anyone else's Social Security number, or confidential business information, such as a manufacturing process. Please note that if you include your name, contact information, or other information that identifies you in the body of your comments, that information will be posted on *http://www.regulations.gov.*

• If you want to submit a comment with confidential information that you do not wish to be made available to the public, submit the comment as a written/paper submission and in the manner detailed (see ''Written/Paper Submissions'' and ''Instructions'').

Written/Paper Submissions

Submit written/paper submissions as follows:

• *Mail/Hand delivery/Courier (for written/paper submissions):* Division of Dockets Management (HFA–305), Food and Drug Administration, 5630 Fishers Lane, Rm. 1061, Rockville, MD 20852.

• For written/paper comments submitted to the Division of Dockets Management, FDA will post your comment, as well as any attachments, except for information submitted, marked and identified, as confidential, if submitted as detailed in ''Instructions.''

Instructions: All submissions received must include the Docket No. FDA–2014–E–2349 ''For Determination of Regulatory Review Period for Purposes of Patent Extension; OPSUMIT.'' Received comments will be placed in the docket and, except for those submitted as ''Confidential Submissions,'' publicly viewable at *http://www.regulations.gov* or at the Division of Dockets Management between 9 a.m. and 4 p.m., Monday through Friday.

• Confidential Submissions—To submit a comment with confidential information that you do not wish to be made publicly available, submit your comments only as a written/paper submission. You should submit two copies total. One copy will include the information you claim to be confidential with a heading or cover note that states ''THIS DOCUMENT CONTAINS CONFIDENTIAL INFORMATION''. The Agency will review this copy, including the claimed confidential information, in its consideration of comments. The second copy, which will have the claimed confidential information redacted/blacked out, will be available for public viewing and posted on *http://www.regulations.gov.* Submit both copies to the Division of Dockets Management. If you do not wish your name and contact information to be made publicly available, you can provide this information on the cover sheet and not in the body of your comments and you must identify this information as ''confidential.'' Any information marked as ''confidential'' will not be disclosed except in accordance with 21 CFR 10.20 and other applicable disclosure law. For more information about FDA's posting of comments to public dockets, see 80 FR 56469, September 18, 2015, or access the information at: *http://www.fda.gov/regulatoryinformation/dockets/default.htm.*

Docket: For access to the docket to read background documents or the electronic and written/paper comments received, go to *http://www.regulations.gov* and insert the docket number, found in brackets in the heading of this document, into the ''Search'' box and follow the prompts and/or go to the Division of Dockets Management, 5630 Fishers Lane, Rm. 1061, Rockville, MD 20852.

FOR FURTHER INFORMATION CONTACT: Beverly Friedman, Office of Regulatory Policy, Food and Drug Administration, 10903 New Hampshire Ave., Bldg. 51, Rm. 6250, Silver Spring, MD 20993, 301–796–3600.

SUPPLEMENTARY INFORMATION:

I. Background

The Drug Price Competition and Patent Term Restoration Act of 1984 (Pub. L. 98–417) and the Generic Animal Drug and Patent Term

Restoration Act (Pub. L. 100–670) generally provide that a patent may be extended for a period of up to 5 years so long as the patented item (human drug product, animal drug product, medical device, food additive, or color additive) was subject to regulatory review by FDA before the item was marketed. Under these acts, a product's regulatory review period forms the basis for determining the amount of extension an applicant may receive.

A regulatory review period consists of two periods of time: A testing phase and an approval phase. For human drug products, the testing phase begins when the exemption to permit the clinical investigations of the drug becomes effective and runs until the approval phase begins. The approval phase starts with the initial submission of an application to market the human drug product and continues until FDA grants permission to market the drug product. Although only a portion of a regulatory review period may count toward the actual amount of extension that the Director of USPTO may award (for example, half the testing phase must be subtracted as well as any time that may have occurred before the patent was issued), FDA's determination of the length of a regulatory review period for a human drug product will include all of the testing phase and approval phase as specified in 35 U.S.C. 156(g)(1)(B).

FDA has approved for marketing the human drug product OPSUMIT (macitentan). OPSUMIT is indicated for the treatment of pulmonary arterial hypertension to delay disease progression. Subsequent to this approval, the USPTO received a patent term restoration application for OPSUMIT (U.S. Patent No. 7,094,781) from Actelion Pharmaceuticals Ltd., and the USPTO requested FDA's assistance in determining this patent's eligibility for patent term restoration. In a letter dated May 11, 2015, FDA advised the USPTO that this human drug product had undergone a regulatory review period and that the approval of OPSUMIT represented the first permitted commercial marketing or use of the product. Thereafter, the USPTO requested that FDA determine the product's regulatory review period.

II. Determination of Regulatory Review Period

FDA has determined that the applicable regulatory review period for OPSUMIT is 1,935 days. Of this time, 1,570 days occurred during the testing phase of the regulatory review period, while 365 days occurred during the approval phase. These periods of time were derived from the following dates:

1. *The date an exemption under section 505(i) of the Federal Food, Drug, and Cosmetic Act (the FD&C Act) (21 U.S.C. 355(i)) became effective:* July 3, 2008. The applicant claims July 2, 2008, as the date the investigational new drug application (IND) became effective. However, FDA records indicate that the IND effective date was July 3, 2008, which was 30 days after FDA receipt of the IND.

2. *The date the application was initially submitted with respect to the human drug product under section 505(b) of the FD&C Act:* October 19, 2012. FDA has verified the applicant's claim that the new drug application (NDA) for OPSUMIT (NDA 204410) was initially submitted on October 19, 2012.

3. *The date the application was approved:* October 18, 2013. FDA has verified the applicant's claim that NDA 204410 was approved on October 18, 2013.

This determination of the regulatory review period establishes the maximum potential length of a patent extension. However, the USPTO applies several statutory limitations in its calculations of the actual period for patent extension. In its application for patent extension, this applicant seeks 1,151 days of patent term extension.

III. Petitions

Anyone with knowledge that any of the dates as published are incorrect may submit either electronic or written comments and ask for a redetermination (see **DATES**). Furthermore, any interested person may petition FDA for a determination regarding whether the applicant for extension acted with due diligence during the regulatory review period. To meet its burden, the petition must be timely (see **DATES**) and contain sufficient facts to merit an FDA investigation. (See H. Rept. 857, part 1, 98th Cong., 2d sess., pp. 41–42, 1984.) Petitions should be in the format specified in 21 CFR 10.30.

Submit petitions electronically to *http://www.regulations.gov* at Docket No. FDA–2013–S–0610. Submit written petitions (two copies are required) to the Division of Dockets Management (HFA–305), Food and Drug Administration, 5630 Fishers Lane, Rm. 1061, Rockville, MD 20852. Petitions that have not been made publicly available on *http://www.regulations.gov* may be viewed in the Division of Dockets Management between 9 a.m. and 4 p.m., Monday through Friday.

Dated: March 7, 2016.

Leslie Kux,

Associate Commissioner for Policy.

[FR Doc. 2016–05389 Filed 3–9–16; 8:45 am]

BILLING CODE 4164–01–P

DEPARTMENT OF HEALTH AND HUMAN SERVICES

National Institutes of Health

National Institute of Neurological Disorders and Stroke; Notice of Meetings

Pursuant to section 10(d) of the Federal Advisory Committee Act, as amended (5 U.S.C. App.), notice is hereby given of a meeting of the National Advisory Neurological Disorders and Stroke Council.

The meeting will be open to the public as indicated below, with attendance limited to space available. Individuals who plan to attend and need special assistance, such as sign language interpretation or other reasonable accommodations, should notify the Contact Person listed below in advance of the meeting.

The meeting will be closed to the public in accordance with the provisions set forth in sections 552b(c)(4) and 552b(c)(6), Title 5 U.S.C., as amended. The grant applications and the discussions could disclose confidential trade secrets or commercial property such as patentable materials, and personal information concerning individuals associated with the grant applications, the disclosure of which would constitute a clearly unwarranted invasion of personal privacy.

Name of Committee: National Advisory Neurological Disorders and Stroke Council.

Date: May 26–27, 2016.

Open: May 26, 2016, 8:00 a.m. to 2:30 p.m.

Agenda: Report by the Director, NINDS; Report by the Associate Director for Extramural Research; Administrative and Program Developments; and an Overview of the NINDS Intramural Program.

Place: National Institutes of Health, Building 31, 31 Center Drive, 6th Floor, Conference Room 10, Bethesda, MD 20892.

Closed: May 26, 2016, 2:30 p.m. to 4:45 p.m.

Agenda: To review and evaluate grant applications.

Place: National Institutes of Health, Building 31, 31 Center Drive, 6th Floor, Conference Room 10, Bethesda, MD 20892.

Closed: May 26, 2016, 4:45 p.m. to 5:15 p.m.

Agenda: To review and evaluate the Division of Intramural Research Board of Scientific Counselors' Reports.

Place: National Institutes of Health, Building 31, 31 Center Drive, 6th Floor, Conference Room 10, Bethesda, MD 20892.

Closed: May 27, 2016, 8:00 a.m. to 11:00 a.m.

Agenda: To review and evaluate grant applications.

Place: National Institutes of Health, Building 31, 31 Center Drive, 6th Floor, Conference Room 10, Bethesda, MD 20892.

Contact Person: Robert Finkelstein, Ph.D., Director of Extramural Research, National Institute of Neurological Disorders and Stroke, NIH, 6001 Executive Blvd., Suite 3309, MSC 9531, Bethesda, MD 20892, (301) 496–9248.

Any interested person may file written comments with the committee by forwarding the statement to the Contact Person listed on this notice. The statement should include the name, address, telephone number and when applicable, the business or professional affiliation of the interested person.

In the interest of security, NIH has instituted stringent procedures for entrance onto the NIH campus. All visitor vehicles, including taxicabs, hotel, and airport shuttles will be inspected before being allowed on campus. Visitors will be asked to show one form of identification (for example, a government-issued photo ID, driver's license, or passport) and to state the purpose of their visit.

Information is also available on the Institute's/Center's home page: *http://www.ninds.nih.gov,* where an agenda and any additional information for the meeting will be posted when available.

(Catalogue of Federal Domestic Assistance Program Nos. 93.853, Clinical Research Related to Neurological Disorders; 93.854, Biological Basis Research in the Neurosciences, National Institutes of Health, HHS).

Dated: March 3, 2016.

Sylvia L. Neal,

Program Analyst, Office of Federal Advisory Committee Policy.

[FR Doc. 2016–05335 Filed 3–9–16; 8:45 am]

BILLING CODE 4140–01–P

DEPARTMENT OF HEALTH AND HUMAN SERVICES

National Institutes of Health

National Cancer Institute; Notice of Meeting

Pursuant to section 10(a) of the Federal Advisory Committee Act, as amended (5 U.S.C. App.), notice is hereby given of a meeting of the National Cancer Institute Council of Research Advocates.

The meeting will be open to the public, with attendance limited to space available. Individuals who plan to attend and need special assistance, such as sign language interpretation or other reasonable accommodations, should notify the Contact Person listed below in advance of the meeting.

Name of Committee: National Cancer Institute Council of Research Advocates.

Date: April 11, 2016.

Time: 8:30 a.m. to 4:30 p.m.

Agenda: Advocacy Community Engagement in Future National Cancer Research Initiatives.

Place: National Institutes of Health, 50 South Drive, Building 50, Conference Rooms 1328/1334, Bethesda, MD 20892.

Contact Person: Amy Williams, NCI Office of Advocacy Relations, National Cancer Institute, NIH, 31 Center Drive, Building 31, Room 10A28, Bethesda, MD 20892, 301–594–3194, *williaam@mail.nih.gov.*

(Catalogue of Federal Domestic Assistance Program Nos. 93.392, Cancer Construction; 93.393, Cancer Cause and Prevention Research; 93.394, Cancer Detection and Diagnosis Research; 93.395, Cancer Treatment Research; 93.396, Cancer Biology Research; 93.397, Cancer Centers Support; 93.398, Cancer Research Manpower; 93.399, Cancer Control, National Institutes of Health, HHS)

Dated: March 4, 2016.

David Clary,

Program Analyst, Office of Federal Advisory Committee Policy.

[FR Doc. 2016–05334 Filed 3–9–16; 8:45 am]

BILLING CODE 4140–01–P

DEPARTMENT OF HEALTH AND HUMAN SERVICES

National Institutes of Health

National Cancer Institute; Notice of Closed Meetings

Pursuant to section 10(d) of the Federal Advisory Committee Act, as amended (5 U.S.C. App.), notice is hereby given of the following meeting.

The meeting will be closed to the public in accordance with the provisions set forth in sections 552b(c)(4) and 552b(c)(6), title 5 U.S.C., as amended. The contract proposals and the discussions could disclose confidential trade secrets or commercial property such as patentable material, and personal information concerning individuals associated with the contract proposals, the disclosure of which would constitute a clearly unwarranted invasion of personal privacy.

Name of Committee: National Cancer Institute Special Emphasis Panel; Cognitive Assessment of Cancer.

Date: March 16–17, 2016.

Time: 10:00 a.m. to 5:00 p.m.

Agenda: To review and evaluate contract proposals.

Place: National Cancer Institute, 9609 Medical Center Drive, Room 7W266, Rockville, MD 20850 (Telephone Conference Call).

Contact Person: Gerald G. Lovinger, Ph.D., Scientific Review Officer, Research Technology and Contract Review Branch, Division of Extramural Activities, National Cancer Institute, NIH, 9609 Medical Center Drive, Room 7W266, Rockville, MD 20850, 240–276–6385, *lovingeg@mail.nih.gov.*

This notice is being published less than 15 days prior to the meeting due to the timing limitations imposed by the review and funding cycle.

(Catalogue of Federal Domestic Assistance Program Nos. 93.392, Cancer Construction; 93.393, Cancer Cause and Prevention Research; 93.394, Cancer Detection and Diagnosis Research; 93.395, Cancer Treatment Research; 93.396, Cancer Biology Research; 93.397, Cancer Centers Support; 93.398, Cancer Research Manpower; 93.399, Cancer Control, National Institutes of Health, HHS)

Dated: March 4, 2016.

David Clary,

Program Analyst, Office of Federal Advisory Committee Policy.

[FR Doc. 2016–05333 Filed 3–9–16; 8:45 am]

BILLING CODE 4140–01–P

DEPARTMENT OF HEALTH AND HUMAN SERVICES

National Institutes of Health

Center For Scientific Review; Notice of Closed Meetings

Pursuant to section 10(d) of the Federal Advisory Committee Act, as amended (5 U.S.C. App.), notice is hereby given of the following meetings.

The meetings will be closed to the public in accordance with the provisions set forth in sections 552b(c)(4) and 552b(c)(6), Title 5 U.S.C., as amended. The grant applications and the discussions could disclose confidential trade secrets or commercial property such as patentable material, and personal information concerning individuals associated with the grant applications, the disclosure of which would constitute a clearly unwarranted invasion of personal privacy.

Name of Committee: Center for Scientific Review Special Emphasis Panel; PAR–15–356: Major Opportunities for Research in Epidemiology of Alzheimer's Disease and Cognitive Resilience (R01).

Date: March 23, 2016.

Time: 11:00 a.m. to 4:00 p.m.

Agenda: To review and evaluate grant applications.

Place: National Institutes of Health, 6701 Rockledge Drive, Bethesda, MD 20892, (Virtual Meeting).

Contact Person: George Vogler, Ph.D., Scientific Review Officer, Center for Scientific Review, National Institutes of Health, 6701 Rockledge Drive, Room 3140, MSC 7770, Bethesda, MD 20892, (301) 237–2693, *voglergp@csr.nih.gov.*

This notice is being published less than 15 days prior to the meeting due to the timing limitations imposed by the review and funding cycle.

Name of Committee: Center for Scientific Review Special Emphasis Panel; Member Conflict: Neurodegeneration Mechanisms and Interventions.

Date: March 28, 2016.

Time: 1:00 p.m. to 4:00 p.m.

Agenda: To review and evaluate grant applications.

Place: National Institutes of Health, 6701 Rockledge Drive, Bethesda, MD 20892, (Telephone Conference Call).

Contact Person: Carol Hamelink, Ph.D., Scientific Review Officer, Center for Scientific Review, National Institutes of Health, 6701 Rockledge Drive, Room 4192, MSC 7850, Bethesda, MD 20892, (301) 213–9887, *hamelinc@csr.nih.gov*.

Name of Committee: Center for Scientific Review Special Emphasis Panel; Member Conflict: Neuronal and Synaptic Plasticity.

Date: March 30, 2016.

Time: 1:00 p.m. to 4:00 p.m.

Agenda: To review and evaluate grant applications.

Place: National Institutes of Health, 6701 Rockledge Drive, Bethesda, MD 20892, (Telephone Conference Call).

Contact Person: Linda MacArthur, Ph.D., Scientific Review Officer, Center for Scientific Review, National Institutes of Health, 6701 Rockledge Drive, Room 4187, Bethesda, MD 20892, 301–537–9986, macarthurlh@csr.nih.gov.

Name of Committee: Center for Scientific Review Special Emphasis Panel; Member Conflict: Neurodegeneration and Mitochondria.

Date: March 31, 2016.

Time: 1:00 p.m. to 3:00 p.m.

Agenda: To review and evaluate grant applications.

Place: National Institutes of Health, 6701 Rockledge Drive, Bethesda, MD 20892, (Telephone Conference Call).

Contact Person: Linda MacArthur, Ph.D., Scientific Review Officer, Center for Scientific Review, National Institutes of Health, 6701 Rockledge Drive, Room 4187, Bethesda, MD 20892, 301–537–9986, *macarthurlh@csr.nih.gov*.

Name of Committee: Center for Scientific Review Special Emphasis Panel; Small Business: Non-HIV Anti Infective Therapeutics.

Date: April 4–5, 2016.

Time: 8:00 a.m. to 5:00 p.m.

Agenda: To review and evaluate grant applications.

Place: Embassy Suites at the Chevy Chase Pavilion, 4300 Military Road, NW., Washington, DC 20015.

Contact Person: Neerja Kaushik-Basu, Ph.D., Scientific Review Officer, Center for Scientific Review, National Institutes of Health, 6701 Rockledge Drive, Room 3198, MSC 7808, Bethesda, MD 20892, (301)435–2306, *kaushikbasun@csr.nih.gov*.

Name of Committee: Center for Scientific Review Special Emphasis Panel; Diversity Fellowships: Oncological Sciences.

Date: April 5–6, 2016.

Time: 9:00 a.m. to 5:00 p.m.

Agenda: To review and evaluate grant applications.

Place: National Institutes of Health, 6701 Rockledge Drive, Bethesda, MD 20892, (Virtual Meeting).

Contact Person: Rolf Jakobi, Ph.D., Scientific Review Officer, Center for Scientific Review, National Institutes of Health, 6701 Rockledge Drive, Room 6187, MSC 7806, Bethesda, MD 20892, 301–495–1718, *jakobir@mail.nih.gov*.

Name of Committee: Center for Scientific Review Special Emphasis Panel; Diversity Fellowships: Oncological Sciences.

Date: April 5–6, 2016.

Time: 9:00 a.m. to 5:00 p.m.

Agenda: To review and evaluate grant applications.

Place: National Institutes of Health, 6701 Rockledge Drive, Bethesda, MD 20892, (Virtual Meeting).

Contact Person: Arnold Revzin, Ph.D., Scientific Review Officer, Center for Scientific Review, National Institutes of Health, 6701 Rockledge Drive, Room 4146, MSC 7824, Bethesda, MD 20892, (301) 435–1153, *revzina@csr.nih.gov*.

(Catalogue of Federal Domestic Assistance Program Nos. 93.306, Comparative Medicine; 93.333, Clinical Research, 93.306, 93.333, 93.337, 93.393–93.396, 93.837–93.844, 93.846–93.878, 93.892, 93.893, National Institutes of Health, HHS)

Dated: March 4, 2016.

Anna Snouffer,

Deputy Director, Office of Federal Advisory Committee Policy.

[FR Doc. 2016–05332 Filed 3–9–16; 8:45 am]

BILLING CODE 4140–01–P

DEPARTMENT OF HEALTH AND HUMAN SERVICES

National Institutes of Health

Proposed Collection; 60-Day Comment Request: NEXT Generation Health Study

Summary: In compliance with the requirement of Section 3506(c)(2)(A) of the Paperwork Reduction Act of 1995, for opportunity for public comment on proposed data collection projects, the *Eunice Kennedy Shriver* National Institute of Child Health and Human Development, the National Institutes of Health (NIH) will publish periodic summaries of proposed projects to be submitted to the Office of Management and Budget (OMB) for review and approval.

Written comments and/or suggestions from the public and affected agencies are invited to address one or more of the following points: (1) Whether the proposed collection of information is necessary for the proper performance of the function of the agency, including whether the information will have practical utility; (2) The accuracy of the agency's estimate of the burden of the proposed collection of information, including the validity of the methodology and assumptions used; (3) The quality, utility, and clarity of the information to be collected; and (4) Minimize the burden of the collection of information on those who are to respond, including the use of appropriate automated, electronic, mechanical, or other technological collection techniques or other forms of information technology.

To Submit Comments and for Further Information: To obtain a copy of the data collection plans and instruments, submit comments in writing, or request more information on the proposed project, contact: Denise L. Haynie, Ph.D., MPH, Staff Scientist, Division of Population Intramural Research, 6100 Executive Blvd. Rm. 7B13, Bethesda, MD 20892, or call non-toll-free number (301)–435–6933 or Email your request, including your address to: *Denise_Haynie@nih.gov*. Formal requests for additional plans and instruments must be requested in writing.

Comment Due Date: Comments regarding this information collection are best assured of having their full effect if received within 60 days of the date of this publication.

Proposed Collection: NEXT Generation Health Study, 0925–0610, Expiration Date 04/30/2016, EXTENSION, *Eunice Kennedy Shriver* National Institute of Child Health and Human Development (NICHD), National Institutes of Health (NIH).

Need and Use of Information Collection: The goal of this research is to obtain data on health and health behaviors annually for seven years beginning in the 2009–2010 school-year from a national probability sample of adolescents. The transition from high school to post high school years is a critical period for changes in health risk behaviors. This information will enable the improvement of health services and programs for youth. The study will provide needed information about the health of U.S. adolescents and young adults and influences on their health.

The study has collected information on adolescent health behaviors and social and environmental contexts for these behaviors annually for six years beginning in the 2009–2010 school year. This study will collect this information in 2016, the last planned data collection. Self-report of health status, health behaviors, and health attitudes will be collected by online surveys.

OMB approval is requested for 3 years. There are no costs to respondents other than their time. The total estimated annualized burden hours are 1385.

ESTIMATED ANNUALIZED BURDEN HOURS

Form name	Type of respondents	Number of respondents	Number of responses per respondent	Average burden per response (in hours)	Total annual burden hour
NEXT Annual Survey	Young Adults	2100	1	35/60	1225
In Home Assessment	Young Adults	532	1	15/60	133
In-home Survey	Young Adults	532	1	3/60	27
Total annual burden hours		2100	3164		1385

Dated: March 3, 2016.

Sarah Glavin,

Project Clearance Liaison, NICHD, NIH.

[FR Doc. 2016–05422 Filed 3–9–16; 8:45 am]

BILLING CODE 4140–01–P

DEPARTMENT OF THE INTERIOR

Fish and Wildlife Service

[FWS–R8–FHC–2016–N039; FXFR1334088TWG0W4–123–FF08EACT00]

Trinity River Adaptive Management Working Group; Public Meeting/ Teleconference

AGENCY: Fish and Wildlife Service, Interior.

ACTION: Notice.

SUMMARY: We, the U.S. Fish and Wildlife Service, announce a public meeting of the Trinity River Adaptive Management Working Group (TAMWG). The TAMWG is a Federal advisory committee that affords stakeholders the opportunity to give policy, management, and technical input concerning Trinity River (California) restoration efforts to the Trinity Management Council (TMC). The TMC interprets and recommends policy, coordinates and reviews management actions, and provides organizational budget oversight.

DATES: *Public meeting:* TAMWG will meet from 9:30 a.m. to 4 p.m. Pacific Time on Tuesday, April 5, 2016. *Deadlines:* For deadlines on submitting written material, please see ''Public Input'' under **SUPPLEMENTARY INFORMATION**.

ADDRESSES: The meeting will be held at the Trinity River Restoration Program Office, 1313 South Main Street, Weaverville, CA 96093. For teleconference participation: Call In Number—866–715–1246, Participant Pass Code—4251781.

FOR FURTHER INFORMATION CONTACT: Joseph C. Polos, by mail at U.S. Fish and Wildlife Service, 1655 Heindon Road, Arcata, CA 95521; by telephone at 707–822–7201 or by email at *joe_polos@fws.gov* or Elizabeth W. Hadley, Redding Electric Utility, by mail at 777 Cypress Avenue, Redding, CA 96001; by telephone at 530–339–7308 or by email at *ehadley@reupower.com.* Individuals with a disability may request an accommodation by sending an email to either point of contact.

SUPPLEMENTARY INFORMATION: In accordance with the requirements of the Federal Advisory Committee Act, 5 U.S.C. App., we announce that the Trinity River Adaptive Management Working Group will hold a meeting.

Background

The TAMWG affords stakeholders the opportunity to give policy, management, and technical input concerning Trinity River (California) restoration efforts to the TMC. The TMC interprets and recommends policy, coordinates and reviews management actions, and provides organizational budget oversight.

Meeting Agenda

- Designated Federal Officer (DFO) update;
- Water Year 2016 Trinity Flow Recommendation;
- Fiscal Year 2017 Trinity River Restoration Program budget;
- TMC current issues; and
- Public comment

The draft agenda will be posted on the Internet at: (*http://www.fws.gov/arcata/fisheries/tamwg.html*).

Public Input

If you wish to . . .	You must contact Elizabeth Hadley (**FOR FURTHER INFORMATION CONTACT**) no later than . . .
Submit written information or questions for the TAMWG to consider during the meeting	March 29, 2016.

Submitting Written Information or Questions

Interested members of the public may submit relevant information or questions for the TAMWG to consider during the meeting. Written statements must be received by the date listed in ''Public Input,'' so that the information may be available to the TAMWG for their consideration prior to this meeting. Written statements must be supplied to Elizabeth Hadley in one of the following formats: One hard copy with original signature, one electronic copy with original signature, and one electronic copy via email (acceptable file formats are Adobe Acrobat PDF, MS Word, PowerPoint, or rich text file).

Registered speakers who wish to expand on their oral statements, or those who wished to speak but could not be accommodated on the agenda, may submit written statements to Elizabeth Hadley up to 7 days after the meeting.

Meeting Minutes

Summary minutes of the meeting will be maintained by Elizabeth Hadley (see **FOR FURTHER INFORMATION CONTACT**). The minutes will be available for public inspection within 14 days after the meeting, and will be posted on the TAMWG Web site at *http://www.fws.gov/arcata.*

Dated: March 4, 2016.

Joseph C. Polos,

Supervisory Fish Biologist, Arcata Fish and Wildlife Office, Arcata, California.

[FR Doc. 2016–05373 Filed 3–9–16; 8:45 am]

BILLING CODE 4333–15–P

DEPARTMENT OF THE INTERIOR

Bureau of Indian Affairs

[167A2100DD/AAKC001030/AOA501010.999900]

Final Environmental Impact Statement for the Proposed Aiya Solar Project, Clark County, Nevada

AGENCY: Bureau of Indian Affairs, Interior.

ACTION: Notice of availability.

SUMMARY: In accordance with the National Environmental Policy Act (NEPA), the Bureau of Indian Affairs (BIA), as the lead Federal agency, with the Bureau of Land Management (BLM), Environmental Protection Agency (EPA), U.S. Fish and Wildlife Service (USFWS), and the Moapa Band of Paiute Indians (Tribe) as Cooperating Agencies, has prepared a final environmental impact statement (FEIS) for the proposed Aiya Solar Project on the Moapa River Indian Reservation in Clark County, Nevada. This notice announces that the FEIS is now available for public review.

DATES: The Record of Decision on the proposed action will be issued no sooner than 30 days after EPA publishes a Notice of Availability in the **Federal Register**.

ADDRESSES: You may request a compact disk copy of the FEIS by providing your name and address in writing or by voicemail to Mr. Chip Lewis, Acting Regional Environmental Protection Officer, BIA Western Regional Office, Branch of Environmental Quality Services, 2600 North Central Avenue, 4th Floor Mail Room, Phoenix, Arizona 85004–3008; fax (602) 379–3833; email: *chip.lewis@bia.gov.* The FEIS will be available for review at: BIA Western Regional Office, 2600 North Central Avenue, 12th Floor, Suite 210, Phoenix, Arizona; BIA Southern Paiute Agency, 180 North 200 East, Suite 111, St. George, Utah; and the BLM Southern Nevada District Office, 4701 N. Torrey Pines Drive, Las Vegas, Nevada. The FEIS is also available on line at: *www.AiyaSolarProjectEIS.com.* Individual paper copies of the FEIS will be provided only upon request.

FOR FURTHER INFORMATION CONTACT: Mr. Chip Lewis, BIA Western Regional Office, Branch of Environmental Quality Services, 2600 North Central Avenue, Phoenix, Arizona 85004–3008, telephone (602) 379–6782; or Mr. Garry Cantley at (602) 379–6750.

SUPPLEMENTARY INFORMATION: The proposed Federal action, taken under 25 U.S.C. 415, is BIA's approval of a solar energy ground lease and associated agreements entered into by the Tribe with Aiya Solar Project, LLC (Aiya Solar or Applicant), a wholly owned subsidiary of First Solar, Inc. (First Solar), to provide for construction and operation of an up-to 100 megawatt (MW) alternating current solar photovoltaic (PV) electricity generation facility located entirely on the Moapa River Indian Reservation and specifically on lands held in trust by the United States for the Tribe. The proposed 230 kilovolt (kV) generation-tie transmission line required for interconnection would be located on Tribal lands, private lands and Federal lands administered and managed by BLM. The Applicant has accordingly requested that the BIA and BLM additionally approve rights-of-way (ROWs) authorizing the construction and operation of the transmission line. Together, the proposed solar energy facility, transmission line, and other associated facilities make up the proposed Aiya Solar Project (Project).

The Project would be located in Township 14 South, Range 66 East, Sections 29, 30, 31, and 32 Mount Diablo Meridian, Nevada. The generation facility would generate electricity using PV panels. Also included would be inverters, a collection system, an on-site substation to step-up the voltage to transmission level voltage at 230 kV, an operations and maintenance building, and other related facilities. An overhead 230 kV generation-tie transmission line, approximately 2.7 miles long, would connect the solar project to NV Energy's Reid-Gardner 230kV substation.

Construction of the Project is expected to take approximately 12 to 15 months. The Applicant is expected to operate the energy facility for 30 years, with two options to renew the lease for an additional 10 years, if mutually acceptable to the Tribe and Applicant. During construction, the PV panels will be placed on top of fixed-tilt and/or single-axis tracking mounting systems that are set on steel posts embedded in the ground. Other foundation design techniques may be used depending on the site topography and conditions. No water will be used to generate electricity during operations. Water will be needed during construction for dust control and a minimal amount will be needed during operations for landscape irrigation and administrative and sanitary water use on site. The water supply required for construction of the Project would be leased from the Moapa Band and would be provided via a new temporary intake installed in the Muddy River and a new temporary above-ground pipeline approximately two miles in length. Operational water would be provided through a tap into an existing water pipeline that crosses the solar site. Access to the Project will be provided via State Highway 168.

The purposes of the Project are to: (1) Provide a long-term, diverse, and viable economic revenue base and job opportunities for the Tribe; (2) help Nevada and neighboring states to meet their state renewable energy needs; and (3) allow the Tribe, in partnership with the Applicant, to optimize the use of the lease site while maximizing the potential economic benefit to the Tribe.

The BIA and BLM will use the EIS to make decisions on the land lease and ROW applications under their respective jurisdiction; EPA may use the document to make decisions under its authorities; the Tribe may use the EIS to make decisions under its Tribal Environmental Policy Ordinance; and the USFWS may use the EIS to support its decision under the Endangered Species Act.

Authority: This notice is published in accordance with section 1503.1 of the Council on Environmental Quality regulations (40 CFR part 1500 *et seq.*) and the Department of the Interior Regulations (43 CFR part 46) implementing the procedural requirements of NEPA (42 U.S.C. 4321 *et seq.*), and in accordance with the exercise of authority delegated to the Assistant Secretary—Indian Affairs by part 209 of the Department Manual.

Dated: March 1, 2016.

Lawrence S. Roberts,

Acting Assistant Secretary—Indian Affairs.

[FR Doc. 2016–05458 Filed 3–9–16; 8:45 am]

BILLING CODE 4337–15–P

DEPARTMENT OF THE INTERIOR

Bureau of Indian Affairs

[167 A2100DD/AAKC001030/A0A501010.999900]

Indian Gaming; Extension of Tribal-State Class III Gaming Compact (Rosebud Sioux Tribe and the State of South Dakota)

AGENCY: Bureau of Indian Affairs, Interior.

ACTION: Notice.

SUMMARY: This notice announces the extension of the Class III gaming compact between the Rosebud Sioux Tribe and the State of South Dakota.

DATES: Effective March 10, 2016.

FOR FURTHER INFORMATION CONTACT: Ms. Paula L. Hart, Director, Office of Indian Gaming, Office of the Assistant

Secretary—Indian Affairs, Washington, DC 20240, (202) 219–4066.

SUPPLEMENTARY INFORMATION: Pursuant to 25 CFR 293.5, an extension to an existing Tribal-State Class III gaming compact does not require approval by the Secretary if the extension does not modify any other terms of the compact. The Rosebud Sioux Tribe and the State of South Dakota have reached an agreement to extend the expiration of their existing Tribal-State Class III gaming compact until August 4, 2016. This publishes notice of the new expiration date of the compact.

Dated: March 2, 2016.

Lawrence S. Roberts,

Acting Assistant Secretary—Indian Affairs.

[FR Doc. 2016–05397 Filed 3–9–16; 8:45 am]

BILLING CODE 4337–15–P

DEPARTMENT OF THE INTERIOR

Bureau of Land Management

[LLMT926000–XXX–L19100000–BJ0000–LRCSEX5020000); XXXL1109AF; MO#4500090743]

Notice of Filing of Plats of Survey; North Dakota

AGENCY: Bureau of Land Management, Interior.

ACTION: Notice of filing of plats of survey.

SUMMARY: The Bureau of Land Management (BLM) will file the plat of survey of the lands described below in the BLM Montana State Office, Billings, Montana, on April 11, 2016.

DATES: A notice of protest of the survey must be filed before April 11, 2016 to be considered. A statement of reasons for a protest may be filed with the notice of protest and must filed within thirty days after the notice of protest is filed.

ADDRESSES: Protests of the survey should be sent to the Branch of Cadastral Survey, Bureau of Land Management, 5001 Southgate Drive, Billings, Montana 59101–4669.

FOR FURTHER INFORMATION CONTACT: Blaise Lodermeier, Cadastral Surveyor, Branch of Cadastral Survey, Bureau of Land Management, 5001 Southgate Drive, Billings, Montana 59101–4669, telephone (406) 896–5128 or (406) 896–5009, *bloderme@blm.gov.* Persons who use a telecommunications device for the deaf (TDD) may call the Federal Information Relay Service (FIRS) at 1–800–877–8339 to contact the above individual during normal business hours. The FIRS is available 24 hours a day, 7 days a week, to leave a message or question with the above individual. You will receive a reply during normal business hours.

SUPPLEMENTARY INFORMATION: This survey was executed at the request of the Regional Director, Bureau of Indian Affairs, Great Plains Region, Aberdeen, South Dakota, and was necessary to determine federal and individual and tribal trust surface and subsurface (oil and gas) lands.

The lands we surveyed are:

Fifth Principal Meridian, North Dakota

T. 147 N., R. 93 W.

The plat, in 11 sheets, representing the supplemental plat of sections 19, 25, 26, 27, 28, 29, 30, 33, 34, 35, and 36, showing the amended lottings, Township 147 North, Range 94 West, Fifth Principal Meridian, North Dakota, was accepted February 26, 2016.

T. 147 N., R. 94 W.

The plat, in 14 sheets, representing the supplemental plat of sections 5, 6, 7, 8, 13, 14, 17, 18, 20, 21, 22, 23, 24, 28, and 29, showing the amended lottings, Township 147 North, Range 94 West, Fifth Principal Meridian, North Dakota, was accepted February 26, 2016. We will place a copy of the plats, in 25 sheets in the open files. They will be available to the public as a matter of information. If the BLM receives a protest against this survey, as shown on this plat, in 25 sheets, prior to the date of the official filing, we will stay the filing pending our consideration of the protest. We will not officially file this plat, in 25 sheets, until the day after we have accepted or dismissed all protests and they have become final, including decisions or appeals. Before including your address, phone number, email address, or other personally identifying information in your comment, you should be aware that your entire comment—including your personally identifying information—may be made publicly available at any time. While you can ask us in your comment to withhold your personally identifying information from public review, we cannot guarantee that we will be able to do so.

Authority: 43 U.S.C. Chap. 3.

Joshua F. Alexander,

Acting Chief, Branch of Cadastral Surveyor, Division of Energy, Minerals and Realty.

[FR Doc. 2016–05316 Filed 3–9–16; 8:45 am]

BILLING CODE 4310–DN–P

JUDICIAL CONFERENCE OF THE UNITED STATES

Meeting of the Judicial Conference Advisory Committee on Rules of Criminal Procedure

AGENCY: Judicial Conference of the United States, Advisory Committee on Rules of Criminal Procedure.

ACTION: Notice of Open Meeting.

SUMMARY: The Advisory Committee on Rules of Criminal Procedure will hold a meeting on April 18, 2016, which will continue the morning of April 19, 2016, if necessary. The meeting will be open to public observation but not participation. An agenda and supporting materials will be posted at least 7 days in advance of the meeting at: *http://www.uscourts.gov/rules-policies/records-and-archives-rules-committees/agenda-books.*

DATES: April 18–19, 2016.

Time: 9:00 a.m. to 5:00 p.m.

ADDRESSES: Thurgood Marshall Federal Judiciary Building, Mecham Conference Center, One Columbus Circle NE., Washington, DC 20544.

FOR FURTHER INFORMATION CONTACT: Rebecca A. Womeldorf, Rules Committee Secretary, Rules Committee Support Office, Administrative Office of the United States Courts, Washington, DC 20544, telephone (202) 502–1820.

Dated: March 7, 2016.

Rebecca A. Womeldorf,

Rules Committee Secretary.

[FR Doc. 2016–05383 Filed 3–9–16; 8:45 am]

BILLING CODE 2210–55–P

JUDICIAL CONFERENCE OF THE UNITED STATES

Meeting of the Judicial Conference Advisory Committee on Rules of Evidence

AGENCY: Advisory Committee on Rules of Evidence, Judicial Conference of the United States.

ACTION: Notice of open meeting.

SUMMARY: The Advisory Committee on Rules of Evidence will hold a one-day meeting. The meeting will be open to public observation but not participation. An agenda and supporting materials will be posted at least 7 days in advance of the meeting at: *http://www.uscourts.gov/rules-policies/records-and-archives-rules-committees/agenda-books.*

DATES: April 29, 2016.

Time: 9:00 a.m. to 5:00 p.m.

ADDRESSES: Lorien Hotel, Independence Conference Room, 1600 King Street, Alexandria, VA 22314.

FOR FURTHER INFORMATION CONTACT: Rebecca A. Womeldorf, Rules Committee Secretary, Rules Committee Support Office, Administrative Office of the United States Courts, Washington, DC 20544, telephone (202) 502–1820.

Dated: March 7, 2016.

Rebecca A. Womeldorf,

Rules Committee Secretary.

[FR Doc. 2016–05382 Filed 3–9–16; 8:45 am]

BILLING CODE 2210–55–P

DEPARTMENT OF LABOR

Employment and Training Administration

Notice To Ensure State Workforce Agencies Are Aware of the Revised Schedule of Remuneration for the Unemployment Compensation for Ex-Servicemembers (UCX) Program That Reflects the Military Pay Increase Effective January 1, 2016

AGENCY: Employment and Training Administration, Labor.

ACTION: Notice.

SUMMARY: Each year, the Department of Defense issues a Schedule of Remuneration that may be used by states, as needed, for UCX purposes. States must use the schedule to determine Federal military wages for UCX ''first claims'' only when the Federal Claims Control Center (FCCC) responds to a request for information indicating that there is no Copy 5 of the Certificate of Release or Discharge from Active Duty (DD Form 214) for an individual under the social security number provided. A response from the FCCC that indicates ''no DD214 on file'' will prompt the state to start the affidavit process and to use the attached schedule to calculate the Federal military wages for an unemployment insurance or UCX monetary determination.

The schedule applies to UCX ''first claims'' filed beginning with the first day of the first week that begins on or after January 1, 2016, pursuant to the UCX program regulations (see 20 CFR 614.12(c)). States must continue to use the existing schedule for UCX ''first claims'' filed before the effective date of the revised schedule.

Portia Wu,

Assistant Secretary for Employment and Training, Labor.

ATTACHMENT

2016 FEDERAL SCHEDULE OF REMUNERATION (20 CFR 614.12(d))

Pay grade	*Monthly rate*	*Weekly* (7/30th)	*Daily* (1/30th)
1. *Commissioned Officers:*			
O–10	$19,369.76	$4,519.61	$645.66
O–9	19,376.38	4,521.16	645.88
O–8	18,180.07	4,242.02	606.00
O–7	16,314.88	3,806.81	543.83
O–6	14,420.17	3,364.71	480.67
O–5	12,188.74	2,844.04	406.29
O–4	10,345.56	2,413.96	344.85
O–3	8,135.35	1,898.25	271.18
O–2	6,595.70	1,539.00	219.86
O–1	5,115.83	1,193.69	170.53
2. *Commissioned Officers With Over 4 Years Active Duty As An Enlisted Member or Warrant Officer:*			
O–3E	$9,447.03	$2,204.31	$314.90
O–2E	7,838.48	1,828.98	261.28
O–1E	6,778.39	1,581.62	225.95
3. *Warrant Officer:*			
W–5	$11,066.16	$2,582.10	$368.87
W–4	9,782.61	2,282.61	326.09
W–3	8,346.82	1,947.59	278.23
W–2	7,253.38	1,692.46	241.77
W–1	6,320.60	1,474.81	210.69
4. *Enlisted Personnel:*			
E–9	$9,323.02	$2,175.37	$310.77
E–8	7,714.21	1,799.98	257.14
E–7	6,882.00	1,605.80	229.40
E–6	6,070.54	1,416.46	202.35
E–5	5,168.29	1,205.93	172.28
E–4	4,247.70	991.13	141.59
E–3	3,867.29	902.37	128.91
E–2	3,714.02	866.60	123.80
E–1	3,416.31	797.14	113.88

The Federal Schedule includes columns reflecting derived weekly and daily rates. This revised Federal Schedule of Remuneration is effective for UCX ''first claims'' filed beginning with the first day of the first week which begins on or after January 1, 2015, pursuant to 20 CFR 614.12(c).

[FR Doc. 2016–05344 Filed 3–9–16; 8:45 am]

BILLING CODE 4510–FW–P

NATIONAL CREDIT UNION ADMINISTRATION

Privacy Act of 1974: System of Records

AGENCY: National Credit Union Administration (NCUA).

ACTION: Notice of Altered Privacy Act System of Records.

SUMMARY: The Personnel Administrative Security System collects and maintains information on individuals requiring access to NCUA-controlled facilities and NCUA applicants, employees, and contractors requiring suitability, fitness, and/or national security determinations.

DATES: Submit comments on or before April 5, 2016. This action will be effective without further notice on April

12, 2016 unless comments are received that would result in a contrary determination.

ADDRESSES: You may submit comments by any of the following methods, but please send comments by one method only:

- *Federal eRulemaking Portal: http://www.regulations.gov.* Follow the instructions for submitting comments.
- *NCUA Web site: http://www.ncua.gov/RegulationsOpinionsLaws/proposed_regs/proposed_regs.html.* Follow the instructions for submitting comments.
- *Email:* Address to *regcomments@ncua.gov.* Include ''[Your name]—Comments on NCUA PASS Registry SORN'' in the email subject line.
- *Fax:* (703) 518–6319. Use the subject line described above for email.
- *Mail:* Address to Gerard Poliquin, Secretary of the Board, National Credit Union Administration, 1775 Duke Street, Alexandria, Virginia 22314–3428.
- *Hand Delivery/Courier:* Same as mail address.

FOR FURTHER INFORMATION CONTACT: Charles Burr, System Manager, Office of Continuity and Security Management, Kevin Johnson, Staff Attorney, or Linda Dent, Senior Agency Official for Privacy, Office of General Counsel, at the National Credit Union Administration, 1775 Duke Street, Alexandria, Virginia, 22314, or telephone: (703) 518–6540.

SUPPLEMENTARY INFORMATION: In accordance with the Privacy Act of 1974 (5 U.S.C. 552a), as amended, NCUA is issuing public notice of its intent to modify the system of records previously maintained by the Office of Human Resources (OHR) and titled ''Employee Suitability and Security Investigations Containing Adverse Information, NCUA.'' The proposed modifications will: Change the system manager from OHR to the Office of Continuity and Security Management (OCSM); rename the system to the ''Personnel Access and Security System (PASS);'' restate the routine uses of records. This action is necessary to meet the requirements of the Privacy Act that federal agencies publish in the **Federal Register** a notice of the existence and character of records it maintains that are retrieved by an individual identifier (5 U.S.C. 552a(e)(4)).

SYSTEM NAME AND NUMBER:

Personnel Access and Security System (PASS), NCUA–1.

SYSTEM LOCATION:

Office of Continuity and Security Management, National Credit Union Administration, 1775 Duke Street, Alexandria, VA 22314–3428.

AUTHORITY FOR MAINTENANCE OF THE SYSTEM:

Government Organization and Employees (5 U.S.C. 301); 5 U.S.C. Chapter 73 (Suitability, Security, and Conduct); 5 U.S.C. 7531–33 (National Security); Federal Information Security Management Act of 2002 (44 U.S.C. 3541); E-Government Act of 2002 (44 U.S.C. 101); Paperwork Reduction Act of 1995 (44 U.S.C. 3501); Executive Order 10450 (Security requirements for government employment); Executive Order 13526 and its predecessor orders (National Security Information); Executive Order 12968 (Access to Classified Information); Executive Order 13857 (Security of Classified Networks and Information); Homeland Security Presidential Directive 12 (HSPD–12), August 27, 2004); 12 U.S.C. 1785 and NCUA Rules and Regulations 701.14; Section 212 of the Federal Credit Union Act (12 U.S.C. 1790a).

PURPOSE(S):

The collected information enables NCUA OCSM to identify and review allegations of misconduct or negligence in employment and other security information relevant to making HSPD–12 PIV card issuance determinations, and personnel suitability, fitness, and/or national security determinations. It also improves the handling of sensitive personal information and facilitates NCUA's ability to identify potential insider threats or potential systemic security concerns.

CATEGORIES OF INDIVIDUALS COVERED BY THE SYSTEM:

The system will collect and maintain information on individuals who require short- or long-term access as required by their position to NCUA-controlled facilities and information technology systems, including NCUA employees, appointees, interns, contractors, students, volunteers, and other non-federal employees either presently or formerly in any of these positions; applicants for NCUA employment or for work on NCUA contracts; applicants, appointees, employees, interns or contractors for whom an Office of Personnel Management (OPM) suitability, fitness or national security clearance investigation has been initiated and/or conducted; officials from troubled or newly chartered credit unions; visitors to NCUA facilities and their security clearance information; foreign national visitors.

CATEGORIES OF RECORDS IN THE SYSTEM:

Incident and investigative material relating to any category of individual described above, including case files containing information such as full name, date of birth, gender, photograph, social security number, place of birth, citizenship; work and home telephone numbers and addresses; identification documentation (such as passports, work visas, driver's licenses); security screening information (such as resume, employer address, applications for employment, fingerprints, credit checks); legal case pleadings and files; employment information (NCUA employment status, former employment letters of reference, former employment letters of termination or resignation); information obtained during security inquires (such as letters of inquiry; other agency database checks and reports; suspicious activity reports and notifications from other agencies and employees; network audit records, email, chat conversations, text messages sent using NCUA devices; social media account findings for individuals undergoing security investigations); self-reported security-related information (such as foreign travel notifications, changes in financial status, changes in marital status, arrests); security violation files; security evaluations and clearances; NCUA security screening status (permanent or provisional); personnel identity verification (PIV) information (such as card status, PIV card number, PIN number).

For visitors, information collected can include names, date of birth, citizenship, identification type, temporary pass number, host name, office symbol, room number, telephone number.

RECORD SOURCE CATEGORIES:

Information is provided by the individual to whom the record pertains; references supplied by the individual such as current and/or former employers and associates; public records such as court documents, news media, social media and other publications; intra-agency records; and investigative and other record material compiled in the course of investigation or furnished by other government agencies.

ROUTINE USES OF RECORDS MAINTAINED IN THE SYSTEM, INCLUDING CATEGORIES OF USERS AND THE PURPOSES OF SUCH USES:

NCUA OCSM uses these records to document the outcome of adjudicative determinations for the issuance of the HSPD–12 PIV card or the local agency access badge, and to document the outcome of adjudicative determinations for suitability, fitness, and/or national security clearances. Contact information is used for communication and

authentication purposes. In addition with those disclosures generally permitted under 5 U.S.C. 552a(b) of the Privacy Act, all or a portion of records in this system may be disclosed to authorized federal or state entities as it is determined to be relevant and necessary.

POLICIES AND PRACTICE FOR STORAGE OF RECORDS:

Records are stored electronically and physically.

POLICIES AND PRACTICE FOR RETRIEVABILITY OF RECORDS:

Records are retrieved by individual identifiers such as name, social security number, or an individual identifier with non-individually identifiable information.

POLICIES AND PRACTICE FOR RETENTION AND DISPOSAL OF RECORDS:

Records are maintained until they become inactive. Records become inactive when they are no longer useful for their collected purpose. Records are disposed in accordance with NCUA record retention schedules and consistent with destruction methods appropriate to the type of information.

PHYSICAL, PROCEDURAL, AND ADMINISTRATIVE SAFEGUARDS:

Information in the system is safeguarded in accordance with the applicable laws, rules and policies governing the operation of federal information systems. Access to privacy-related information within the system is password protected and restricted to authorized personnel. Physical records in paper format are safeguarded in accordance with the applicable laws, rules and policies governing privacy-related information. All records in paper format are stored under the requisite double-lock. Access to privacy-related information in paper format is restricted to authorized personnel.

SYSTEM MANAGER(S):

Deputy Director, Office of Continuity and Security Management, National Credit Union Administration, 1775 Duke Street, Alexandria, VA 22314–3428.

RECORD ACCESS PROCEDURES:

Upon verification that an individual has a record in the system, as determined by the notification procedure below, the system manager will provide the procedure for gaining access to available records.

CONTESTING RECORD PROCEDURES:

Requests to amend or correct a record should be submitted in writing to the system manager listed above in accordance with NCUA regulations at 12 CFR part 792, subpart E. Requesters must reasonably identify the record, specify the information being contested, state the corrective action sought and the reasons for the correction along with supporting justification showing why the record is not accurate, timely, relevant, or complete.

NOTIFICATION PROCEDURE:

An individual can determine if this system contains a record pertaining to the individual by addressing a request in writing to the system manager listed above in accordance with NCUA regulations at 12 CFR part 792, subpart E. The individual must provide his/her full name and identify the date he/she was associated with NCUA as well as contact information for a response. If there is no record on the individual, the individual will be so advised.

EXEMPTIONS PROMULGATED FOR THE SYSTEM:

In addition to any exemption to which this system is subject by Notices published by or regulations promulgated by OPM or the Director of National Intelligence, the system is subject to a specific exemption pursuant to 5 U.S.C. 552a (k)(5) to the extent that disclosures would reveal a source who furnished information under an express promise of confidentiality, or prior to September 27, 1975, under an express or implied promise of confidentiality.

By the National Credit Union Administration on March 3, 2016.

Gerard Poliquin,

Secretary of the Board.

[FR Doc. 2016–05313 Filed 3–9–16; 8:45 am]

BILLING CODE P

NATIONAL SCIENCE FOUNDATION

Advisory Committee for Education and Human Resources; Notice of Meeting

In accordance with the Federal Advisory Committee Act (Pub. L. 92–463, as amended), the National Science Foundation announces the following meeting:

Name: Advisory Committee for Education and Human Resources (#1119).

Date/Time: April 19, 2016; 8:00 a.m.–5:00 p.m., April 20, 2016; 8:00 a.m.–1:00 p.m.

Place: National Science Foundation, 4201 Wilson Boulevard, Room 375, Arlington, VA 22230.

Operated assisted teleconference is available for this meeting. Call 877–612–4835 with password AC MEETING and you will be connected to the audio portion of the meeting.

To attend the meeting in person, all visitors must contact the Directorate for Education and Human Resources (*ehr_ac@nsf.gov*) at least 24 hours prior to the teleconference to arrange for a visitor's badge. All visitors must report to the NSF visitor desk located in the lobby at the 9th and N. Stuart Streets entrance at 4201 Wilson Blvd. on the day of the teleconference to receive a visitor's badge.

Meeting materials and minutes will also be available on the EHR Advisory Committee Web site at *http://www.nsf.gov/ehr/advisory.jsp.*

Type of Meeting: Open, Teleconference.

Contact Person: Keaven M. Stevenson, National Science Foundation, 4201 Wilson Boulevard, Room 805, Arlington, VA 22230; (703) 292–8600; email: *kstevens@nsf.gov*.

Purpose of Meeting: To provide advice with respect to the Foundation's science, technology, engineering, and mathematics (STEM) education and human resources programming.

Agenda

Tuesday, April 19, 2016; 8:00 a.m.–5:00 p.m.

- Remarks by the Committee Chair and NSF Assistant Director for Education and Human Resources (EHR)
- The Mutual Relationship Between STEM and STEM Education Research
- Discussion:
  - A View from the Field: The Mutual Relationship Between STEM and STEM Education Research
  - A View from NSF Program Officers: The Mutual Relationship Between STEM and STEM Education Research
- Discussion of the Open Education Resources/Intellectual Product Subcommittee
- Discussion: Open Challenges and Opportunities from the Strategic Re-envisioning for the Education and Human Resources Directorate Report
- Meeting with Dr. France Córdova, NSF Director

Wednesday, April 20, 2016; 8:00 a.m.–1:00 p.m.

- Discussion: NSF INCLUDES
- Presentation on NSF Public Access Policy
- Committee of Visitors Report and Updates from Program
- Adjournment

Dated: March 7, 2016.

Crystal Robinson,

Committee Management Officer.

[FR Doc. 2016–05394 Filed 3–9–16; 8:45 am]

BILLING CODE 7555–01–P

NUCLEAR REGULATORY COMMISSION

[Docket Nos. 052–00027 and 052–00028; NRC–2008–0441]

Virgil C. Summer Nuclear Station, Units 2 and 3

AGENCY: Nuclear Regulatory Commission.

ACTION: License amendment application; opportunity to comment, request a hearing, and petition for leave to intervene.

SUMMARY: The U.S. Nuclear Regulatory Commission (NRC) is considering issuance of an amendment to Combined Licenses (COLs), NPF–93 and NPF–94, issued to South Carolina Electric and Gas (SCE&G) and South Carolina Public Service Authority (Santee Cooper) (the licensee), for construction and operation of the Virgil C. Summer Nuclear Station (VCSNS), Units 2 and 3 located in Fairfield County, South Carolina. The proposed amendment to COL Appendix C information, and supporting Tier 2 information, requires a corresponding plant-specific Tier 1 departure and exemption.

DATES: Submit comments by April 11, 2016. Requests for a hearing or petition for leave to intervene must be filed by May 9, 2016.

ADDRESSES: You may submit comments by any of the following methods:

- *Federal Rulemaking Web Site:* Go to *http://www.regulations.gov* and search for Docket ID NRC–2008–0441. Address questions about NRC dockets to Carol Gallagher; telephone: 301–415–3463; email: *Carol.Gallagher@nrc.gov.* For technical questions, contact the individual listed in the **FOR FURTHER INFORMATION CONTACT** section of this document.
- *Mail comments to:* Cindy Bladey, Office of Administration, Mail Stop: OWFN–12H08, U.S. Nuclear Regulatory Commission, Washington, DC 20555–0001.

For additional direction on obtaining information and submitting comments, see ''Obtaining Information and Submitting Comments'' in the **SUPPLEMENTARY INFORMATION** section of this document.

FOR FURTHER INFORMATION CONTACT: Ruth C. Reyes, Office of New Reactors, U.S. Nuclear Regulatory Commission, Washington, DC 20555–000; telephone: 301–415–3249; email: *Ruth.Reyes@nrc.gov.*

SUPPLEMENTARY INFORMATION:

I. Obtaining Information and Submitting Comments

A. Obtaining Information

Please refer to Docket ID NRC–2008–0441 when contacting the NRC about the availability of information for this action. You may obtain publicly-available information related to this action by any of the following methods:

- *Federal Rulemaking Web Site:* Go to *http://www.regulations.gov* and search for Docket ID NRC–2008–0441.
- *NRC's Agencywide Documents Access and Management System (ADAMS):* You may obtain publicly-available documents online in the ADAMS Public Documents collection at *http://www.nrc.gov/reading-rm/adams.html.* To begin the search, select ''*ADAMS Public Documents*'' and then select ''*Begin Web-based ADAMS Search.*'' For problems with ADAMS, please contact the NRC's Public Document Room (PDR) reference staff at 1–800–397–4209, 301–415–4737, or by email to *pdr.resource@nrc.gov.* The application for amendment, dated January 14, 2016, and as revised and replaced by letter dated, February 22, 2016, are available in ADAMS under Accession No. ML16015A058 and ML16053A405, respectively.
- *NRC's PDR:* You may examine and purchase copies of public documents at the NRC's PDR, Room O1–F21, One White Flint North, 11555 Rockville Pike, Rockville, Maryland 20852.

B. Submitting Comments

Please include Docket ID NRC–2008–0441 in your comment submission.

The NRC cautions you not to include identifying or contact information that you do not want to be publicly disclosed in your comment submission. The NRC posts all comment submissions at *http://www.regulations.gov* as well as entering the comment submissions into ADAMS. The NRC does not routinely edit comment submissions to remove identifying or contact information.

If you are requesting or aggregating comments from other persons for submission to the NRC, then you should inform those persons not to include identifying or contact information that they do not want to be publicly disclosed in their comment submission. Your request should state that the NRC does not routinely edit comment submissions to remove such information before making the comment submissions available to the public or entering the comment submissions into ADAMS.

II. Introduction

The NRC is considering issuance of an amendment to Facility Operating License Nos. NPF–93 and NPF–94, issued to SCE&G and Santee Cooper for operation of the Virgil C. Summer Nuclear Station Units 2 and 3, located in Fairfield County, South Carolina.

The proposed amendment requires changes to Tier 2 information and to the associated COL Appendix C information, with corresponding changes to the plant-specific Tier 1 information, concerning the design details of the auxiliary building structural design, specifically the tolerance for concrete wall thicknesses for the column line J–1 and J–2 reinforced concrete walls connected to the column line 4 structural module wall (*i.e.,* the north wall of the CA20 module). Because these propose changes require corresponding changes to Tier 1 information in the Westinghouse AP1000 Design Control Document (DCD), the licensee also proposed a departure and requested an exemption from the requirements of the certified AP1000 DCD Tier 1 in accordance with § 52.63(b)(1) of title 10 of the *Code of Federal Regulations* (10 CFR).

Before any issuance of the proposed license amendment, the NRC will need to make the findings required by the Atomic Energy Act of 1954, as amended (the Act), and NRC's regulations.

The NRC has made a proposed determination that the license amendment request involves no significant hazards consideration. Under the NRC's regulations in § 50.92, this means that operation of the facility in accordance with the proposed amendment would not (1) involve a significant increase in the probability or consequences of an accident previously evaluated; or (2) create the possibility of a new or different kind of accident from any accident previously evaluated; or (3) involve a significant reduction in a margin of safety. As required by 10 CFR 50.91(a), the licensee has provided its analysis of the issue of no significant hazards consideration, which is presented below:

1. Does the proposed change involve a significant increase in the probability or consequences of an accident previously evaluated?

Response: No.

The design functions of the auxiliary building, including the column line J–1 and J–2 walls, include requirements to be designed as seismic Category I structures, and to provide required fire protection and radiological protection features. The proposed changes to the tolerance for concrete wall thicknesses

for the column line J–1 and J–2 walls are acceptable as they address construction deviations without adversely affecting the seismic Category I and other structural design requirements, and by continuing to provide required fire protection and radiological protection features, maintaining these design functions.

These proposed changes to the design of the column line J–1 and J–2 walls as described in the current licensing basis do not have an adverse effect on any of the design functions of the systems. The proposed changes do not affect the support, design, or operation of mechanical and fluid systems required to mitigate the consequences of an accident. There is no change to plant systems or the response of systems to postulated accident conditions. There is no change to the predicted radioactive releases due to postulated accident conditions. The plant response to previously evaluated accidents or external events is not adversely affected, nor do the proposed changes create any new accident precursors.

Therefore, the proposed amendment does not involve a significant increase in the probability or consequences of an accident previously evaluated.

2. Does the proposed change create the possibility of a new or different kind of accident from any accident previously evaluated?

Response: No.

The proposed changes revise the design of the auxiliary building, specifically the column line J–1 and J–2 walls, as described in the current licensing basis to enable the affected walls to perform required design functions, and are consistent with Updated Final Safety Analysis Report (UFSAR) information. The proposed changes do not adversely affect the design requirements for the column line J–1 and J–2 walls. The proposed changes do not adversely affect the design function, support, design, or operation of mechanical and fluid systems. The proposed changes to the column line J–1 and J–2 walls do not result in a new failure mechanism or introduce any new accident precursors. No design function described in the UFSAR is adversely affected by the proposed changes.

Therefore, the proposed amendment does not create the possibility of a new or different kind of accident from any accident previously evaluated.

3. Does the proposed change involve a significant reduction in a margin of safety?

Response: No.

No safety analysis or design basis acceptance limit/criterion is challenged or exceeded by the proposed changes, and no margin of safety is reduced.

Therefore, the requested amendment does not involve a significant reduction in a margin of safety.

Therefore, the proposed changes do not involve a significant reduction in a margin of safety.

The NRC staff has reviewed the licensee's analysis and, based on this review, it appears that the three standards of 10 CFR 50.92(c) are satisfied. Therefore, the NRC staff proposes to determine that the license amendment request involves a No Significant Hazards Consideration.

The NRC is seeking public comments on this proposed determination that the license amendment request involves no significant hazards consideration. Any comments received within 30 days after the date of publication of this notice will be considered in making any final determination.

Normally, the Commission will not issue the amendment until the expiration of 60 days after the date of publication of this notice. The Commission may issue the license amendment before expiration of the 60-day notice period if the Commission concludes the amendment involves no significant hazards consideration. In addition, the Commission may issue the amendment prior to the expiration of the 30-day comment period should circumstances change during the 30-day comment period such that failure to act in a timely way would result, for example, in derating or shutdown of the facility. Should the Commission take action prior to the expiration of either the comment period or the notice period, it will publish in the **Federal Register** a notice of issuance. Should the Commission make a final No Significant Hazards Consideration Determination, any hearing will take place after issuance. The Commission expects that the need to take this action will occur very infrequently.

III. Opportunity To Request a Hearing and Petition for Leave To Intervene

Within 60 days after the date of publication of this notice, any person(s) whose interest may be affected by this action may file a request for a hearing and a petition to intervene with respect to issuance of the amendment to the subject facility operating license or combined license. Requests for a hearing and a petition for leave to intervene shall be filed in accordance with the Commission's ''Agency Rules of Practice and Procedure'' in 10 CFR part 2. Interested person(s) should consult a current copy of 10 CFR 2.309, which is available at the NRC's PDR, located at One White Flint North, Room O1–F21, 11555 Rockville Pike (first floor), Rockville, Maryland 20852. The NRC's regulations are accessible electronically from the NRC Library on the NRC's Web site at *http://www.nrc.gov/reading-rm/doc-collections/cfr/*.

If a request for a hearing or petition for leave to intervene is filed within 60 days, the Commission or a presiding officer designated by the Commission or by the Chief Administrative Judge of the Atomic Safety and Licensing Board Panel, will rule on the request and/or petition; and the Secretary or the Chief Administrative Judge of the Atomic Safety and Licensing Board will issue a notice of a hearing or an appropriate order.

As required by 10 CFR 2.309, a petition for leave to intervene shall set forth with particularity the interest of the petitioner in the proceeding, and how that interest may be affected by the results of the proceeding. The petition should specifically explain the reasons why intervention should be permitted with particular reference to the following general requirements: (1) The name, address, and telephone number of the requestor or petitioner; (2) the nature of the requestor's/petitioner's right under the Act to be made a party to the proceeding; (3) the nature and extent of the requestor's/petitioner's property, financial, or other interest in the proceeding; and (4) the possible effect of any decision or order which may be entered in the proceeding on the requestor's/petitioner's interest. The petition must also set forth the specific contentions which the requestor/petitioner seeks to have litigated at the proceeding.

Each contention must consist of a specific statement of the issue of law or fact to be raised or controverted. In addition, the requestor/petitioner shall provide a brief explanation of the bases for the contention and a concise statement of the alleged facts or expert opinion which support the contention and on which the requestor/petitioner intends to rely in proving the contention at the hearing. The requestor/petitioner must also provide references to those specific sources and documents of which the petitioner is aware and on which the requestor/petitioner intends to rely to establish those facts or expert opinion. The petition must include sufficient information to show that a genuine dispute exists with the applicant on a material issue of law or fact. Contentions shall be limited to matters within the scope of the amendment under consideration. The contention must be one which, if

proven, would entitle the requestor/petitioner to relief. A requestor/petitioner who fails to satisfy these requirements with respect to at least one contention will not be permitted to participate as a party.

Those permitted to intervene become parties to the proceeding, subject to any limitations in the order granting leave to intervene, and have the opportunity to participate fully in the conduct of the hearing with respect to resolution of that person's admitted contentions, including the opportunity to present evidence and to submit a cross-examination plan for cross-examination of witnesses, consistent with NRC regulations, policies and procedures.

Petitions for leave to intervene must be filed no later than 60 days from the date of publication of this notice. Requests for hearing, petitions for leave to intervene, and motions for leave to file new or amended contentions that are filed after the 60-day deadline will not be entertained absent a determination by the presiding officer that the filing demonstrates good cause by satisfying the three factors in 10 CFR 2.309(c)(1)(i)–(iii).

If a hearing is requested, and the Commission has not made a final determination on the issue of no significant hazards consideration, the Commission will make a final determination on the issue of no significant hazards consideration. The final determination will serve to decide when the hearing is held. If the final determination is that the amendment request involves no significant hazards consideration, the Commission may issue the amendment and make it immediately effective, notwithstanding the request for a hearing. Any hearing held would take place after issuance of the amendment. If the final determination is that the amendment request involves a significant hazards consideration, then any hearing held would take place before the issuance of any amendment unless the Commission finds an imminent danger to the health or safety of the public, in which case it will issue an appropriate order or rule under 10 CFR part 2.

A State, local governmental body, Federally-recognized Indian Tribe, or agency thereof, may submit a petition to the Commission to participate as a party under 10 CFR 2.309(h)(1). The petition should state the nature and extent of the petitioner's interest in the proceeding. The petition should be submitted to the Commission by May 9, 2016. The petition must be filed in accordance with the filing instructions in the ''Electronic Submissions (E-Filing)'' section of this document, and should meet the requirements for petitions for leave to intervene set forth in this section, except that under § 2.309(h)(2) a State, local governmental body, or Federally-recognized Indian Tribe, or agency thereof does not need to address the standing requirements in 10 CFR 2.309(d) if the facility is located within its boundaries. A State, local governmental body, Federally-recognized Indian Tribe, or agency thereof may also have the opportunity to participate under 10 CFR 2.315(c).

If a hearing is granted, any person who does not wish, or is not qualified, to become a party to the proceeding may, in the discretion of the presiding officer, be permitted to make a limited appearance pursuant to the provisions of 10 CFR 2.315(a). A person making a limited appearance may make an oral or written statement of position on the issues, but may not otherwise participate in the proceeding. A limited appearance may be made at any session of the hearing or at any prehearing conference, subject to the limits and conditions as may be imposed by the presiding officer. Persons desiring to make a limited appearance are requested to inform the Secretary of the Commission by May 9, 2016.

IV. Electronic Submissions (E-Filing)

All documents filed in NRC adjudicatory proceedings, including a request for hearing, a petition for leave to intervene, any motion or other document filed in the proceeding prior to the submission of a request for hearing or petition to intervene, and documents filed by interested governmental entities participating under 10 CFR 2.315(c), must be filed in accordance with the NRC's E-Filing rule (72 FR 49139; August 28, 2007). The E-Filing process requires participants to submit and serve all adjudicatory documents over the internet, or in some cases to mail copies on electronic storage media. Participants may not submit paper copies of their filings unless they seek an exemption in accordance with the procedures described below.

To comply with the procedural requirements of E-Filing, at least 10 days prior to the filing deadline, the participant should contact the Office of the Secretary by email at *hearing.docket@nrc.gov,* or by telephone at 301–415–1677, to request (1) a digital identification (ID) certificate, which allows the participant (or its counsel or representative) to digitally sign documents and access the E-Submittal server for any proceeding in which it is participating; and (2) advise the Secretary that the participant will be submitting a request or petition for hearing (even in instances in which the participant, or its counsel or representative, already holds an NRC-issued digital ID certificate). Based upon this information, the Secretary will establish an electronic docket for the hearing in this proceeding if the Secretary has not already established an electronic docket.

Information about applying for a digital ID certificate is available on the NRC's public Web site at *http://www.nrc.gov/site-help/e-submittals/getting-started.html.* System requirements for accessing the E-Submittal server are detailed in the NRC's ''Guidance for Electronic Submission,'' which is available on the agency's public Web site at *http://www.nrc.gov/site-help/e-submittals.html.* Participants may attempt to use other software not listed on the Web site, but should note that the NRC's E-Filing system does not support unlisted software, and the NRC Meta System Help Desk will not be able to offer assistance in using unlisted software.

If a participant is electronically submitting a document to the NRC in accordance with the E-Filing rule, the participant must file the document using the NRC's online, Web-based submission form. In order to serve documents through the Electronic Information Exchange System, users will be required to install a Web browser plug-in from the NRC's Web site. Further information on the Web-based submission form, including the installation of the Web browser plug-in, is available on the NRC's public Web site at *http://www.nrc.gov/site-help/e-submittals.html.*

Once a participant has obtained a digital ID certificate and a docket has been created, the participant can then submit a request for hearing or petition for leave to intervene. Submissions should be in Portable Document Format (PDF) in accordance with NRC guidance available on the NRC's public Web site at *http://www.nrc.gov/site-help/e-submittals.html.* A filing is considered complete at the time the documents are submitted through the NRC's E-Filing system. To be timely, an electronic filing must be submitted to the E-Filing system no later than 11:59 p.m. Eastern Time on the due date. Upon receipt of a transmission, the E-Filing system time-stamps the document and sends the submitter an email notice confirming receipt of the document. The E-Filing system also distributes an email notice that provides access to the document to the NRC's Office of the General Counsel and any others who

have advised the Office of the Secretary that they wish to participate in the proceeding, so that the filer need not serve the documents on those participants separately. Therefore, applicants and other participants (or their counsel or representative) must apply for and receive a digital ID certificate before a hearing request/petition to intervene is filed so that they can obtain access to the document via the E-Filing system.

A person filing electronically using the NRC's adjudicatory E-Filing system may seek assistance by contacting the NRC Meta System Help Desk through the ''Contact Us'' link located on the NRC's public Web site at *http://www.nrc.gov/site-help/e-submittals.html,* by email to *MSHD.Resource@nrc.gov,* or by a toll-free call at 1–866–672–7640. The NRC Meta System Help Desk is available between 8 a.m. and 8 p.m., Eastern Time, Monday through Friday, excluding government holidays.

Participants who believe that they have a good cause for not submitting documents electronically must file an exemption request, in accordance with 10 CFR 2.302(g), with their initial paper filing requesting authorization to continue to submit documents in paper format. Such filings must be submitted by: (1) First class mail addressed to the Office of the Secretary of the Commission, U.S. Nuclear Regulatory Commission, Washington, DC 20555–0001, Attention: Rulemaking and Adjudications Staff; or (2) courier, express mail, or expedited delivery service to the Office of the Secretary, Sixteenth Floor, One White Flint North, 11555 Rockville Pike, Rockville, Maryland, 20852, Attention: Rulemaking and Adjudications Staff. Participants filing a document in this manner are responsible for serving the document on all other participants. Filing is considered complete by first-class mail as of the time of deposit in the mail, or by courier, express mail, or expedited delivery service upon depositing the document with the provider of the service. A presiding officer, having granted an exemption request from using E-Filing, may require a participant or party to use E-Filing if the presiding officer subsequently determines that the reason for granting the exemption from use of E-Filing no longer exists.

Documents submitted in adjudicatory proceedings will appear in the NRC's electronic hearing docket which is available to the public at *http://ehd1.nrc.gov/ehd/,* unless excluded pursuant to an order of the Commission, or the presiding officer. Participants are requested not to include personal privacy information, such as social security numbers, home addresses, or home phone numbers in their filings, unless an NRC regulation or other law requires submission of such information. However, in some instances, a request to intervene will require including information on local residence in order to demonstrate a proximity assertion of interest in the proceeding. With respect to copyrighted works, except for limited excerpts that serve the purpose of the adjudicatory filings and would constitute a Fair Use application, participants are requested not to include copyrighted materials in their submission.

For further details with respect to this action, see the application for license amendment and exemption dated January 14, 2016, as revised by letter dated February 22, 2016.

Attorney for licensee: Ms. Kathryn M. Sutton, Morgan, Lewis & Bockius LLC, 1111 Pennsylvania Avenue NW., Washington, DC 20004–2514.

NRC Branch Chief: John McKirgan

Dated at Rockville, Maryland, this 2nd day of March 2016.

For the Nuclear Regulatory Commission.

John McKirgan,

Acting Chief, Licensing Branch 4, Division of New Reactor Licensing, Office of New Reactors.

[FR Doc. 2016–05259 Filed 3–9–16; 8:45 am]

BILLING CODE 7590–01–P

OFFICE OF PERSONNEL MANAGEMENT

Submission for Review: Combined Federal Campaign Charity Applications, OPM Forms 1647 A–E, 3206–0131

AGENCY: U.S. Office of Personnel Management.

ACTION: 30-Day notice and request for comments.

SUMMARY: The Combined Federal Campaign (CFC), Office of Personnel Management (OPM) offers the general public and other Federal agencies the opportunity to comment on an information collection request, Combined Federal Campaign Applications OMB Control No. 3206–0131, which includes OPM Forms 1647 A–E. As required by the Paperwork Reduction Act of 1995, (Pub. L. 104–13, 44 U.S.C. chapter 35) as amended by the Clinger-Cohen Act (Pub. L. 104–106), OPM is soliciting comments on this collection. The Office of Personnel Management is particularly interested in comments that:

1. Evaluate whether the proposed collection of information is necessary for the proper performance of the functions of the agency, including whether the information will have practical utility;
2. Evaluate the accuracy of the agency's estimate of the burden of the proposed collection of information, including the validity of the methodology and assumptions used;
3. Enhance the quality, utility, and clarity of the information to be collected; and
4. Minimize the burden of the collection of information on those who are to respond, including through the use of appropriate automated, electronic, mechanical, or other technological collection techniques or other forms of information technology, *e.g.,* permitting electronic submissions of responses.

DATES: Comments are encouraged and will be accepted until April 11, 2016. This process is conducted in accordance with 5 CFR 1320.1.

ADDRESSES: Interested persons are invited to submit written comments on the proposed information collection to the U.S. Office of Personnel Management, Combined Federal Campaign, 1900 E Street NW., Washington, DC 20415, Attention: Marcus Glasgow or sent via electronic mail to *cfc@opm.gov.*

FOR FURTHER INFORMATION CONTACT: A copy of this information collection request, with applicable supporting documentation, may be obtained by contacting the U.S. Office of Personnel Management, Combined Federal Campaign, 1900 E Street NW., Washington, DC 20415, Attention: Marcus Glasgow or sent via electronic mail to *cfc@opm.gov.*

SUPPLEMENTARY INFORMATION: The Combined Federal Campaign (CFC) is the world's largest and most successful annual workplace philanthropic giving campaign, with 135 CFC campaigns throughout the country and overseas raising millions of dollars each year. The mission of the CFC is to promote and support philanthropy through a program that is employee focused, cost-efficient, and effective in providing all federal employees the opportunity to improve the quality of life for all.

The Combined Federal Campaign Eligibility Applications are used to review the eligibility of national, international, and local charitable organizations and Department of Defense Family Services and Youth Activities (FSYA) and Morale, Welfare, and Recreation (MWR) organizations that wish to participate in the Combined

Federal Campaign. The proposed revisions reflect changes in eligibility guidance from the Office of Personnel Management.

Analysis

Agency: Combined Federal Campaign, Office of Personnel Management.

Title: OPM Forms 1647 A–E.

OMB Number: OMB Control No. 3206–0131.

Frequency: Annually.

Affected Public: Individuals or Households.

Number of Respondents: 20,000.

Estimated Time per Respondent: 3 hours.

Total Burden Hours: 60,000 hours.

Beth F. Cobert,

Acting Director, U.S. Office of Personnel Management.

[FR Doc. 2016–05457 Filed 3–9–16; 8:45 am]

BILLING CODE 6325–46–P

OFFICE OF PERSONNEL MANAGEMENT

Hispanic Council on Federal Employment

AGENCY: U.S. Office of Personnel Management.

ACTION: March 29, 2016 Council meeting.

SUMMARY: The Hispanic Council on Federal Employment (Council) meeting will be held on Tuesday, March 29, 2016 at the location shown below from 1:00 p.m. to 2:30 p.m.

The Council is an advisory committee composed of representatives from Hispanic organizations and senior government officials. Along with its other responsibilities, the Council shall advise the Director of the Office of Personnel Management on matters involving the recruitment, hiring, and advancement of Hispanics in the Federal workforce. The Council is co-chaired by the Director of the Office of Personnel Management and the Chair of the National Hispanic Leadership Agenda (NHLA).

The meeting is open to the public. Please contact the Office of Personnel Management at the address shown below if you wish to present material to the Council at any of the meetings. The manner and time prescribed for presentations may be limited, depending upon the number of parties that express interest in presenting information.

ADDRESSES: U.S. Office of Personnel Management, 1900 E St. NW., Executive Conference Room, 5th Floor, Washington, DC 20415.

FOR FURTHER INFORMATION CONTACT: Sharon Wong, Deputy Director, Policy & Coordination for the Office of Diversity and Inclusion, Office of Personnel Management, 1900 E St. NW., Suite 5H35, Washington, DC 20415. Phone (202) 606–0020 FAX (202) 606–6012 or email at *sharon.wong@opm.gov*.

U.S. Office of Personnel Management.

Beth F. Cobert,

Acting Director.

[FR Doc. 2016–05455 Filed 3–9–16; 8:45 am]

BILLING CODE 6820–B2–P

OFFICE OF PERSONNEL MANAGEMENT

Submission for Review: Combined Federal Campaign Charity Applications, OPM Forms 1647–A, –B, and –E, 3206–0131

AGENCY: U.S. Office of Personnel Management.

ACTION: 60-Day notice and request for comments.

SUMMARY: The Combined Federal Campaign (CFC), Office of Personnel Management (OPM) offers the general public and other Federal agencies the opportunity to comment on a revision to an existing information collection request, Combined Federal Campaign Applications OMB Control No. 3206–0131, which includes OPM Forms 1647–A, –B, and –E. New CFC rules published April 17, 2014 (76 FR 21581) authorize a means of electronic collection of CFC charity application information at 5 CFR 950.106(a). Pursuant to 5 CFR 1320.8(a)(5), it has been determined that the burden on respondents will be significantly reduced by use of this online application system. Moreover, OPM will discontinue use of OPM Forms 1647–C and –D as use of this online application system will render these forms unnecessary. As required by the Paperwork Reduction Act of 1995, (Pub. L. 104–13, 44 U.S.C. chapter 35) as amended by the Clinger-Cohen Act (Pub. L. 104–106), OPM is soliciting comments for this collection.

The Office of Personnel Management is particularly interested in comments that:

1. Evaluate whether the proposed collection of information is necessary for the proper performance of the functions of the agency, including whether the information will have practical utility;

2. Evaluate the accuracy of the agency's estimate of the burden of the proposed collection of information, including the validity of the methodology and assumptions used;

3. Enhance the quality, utility, and clarity of the information to be collected; and

4. Minimize the burden of the collection of information on those who are to respond, including through the use of appropriate automated, electronic, mechanical, or other technological collection techniques or other forms of information technology, *e.g.,* permitting electronic submissions of responses.

DATES: Comments are encouraged and will be accepted until May 9, 2016. This process is conducted in accordance with 5 CFR 1320.1.

ADDRESSES: Interested persons are invited to submit written comments on the proposed information collection to the U.S. Office of Personnel Management, Combined Federal Campaign, 1900 E Street NW., Washington, DC 20415, Attention: Marcus Glasgow or sent via electronic mail to *cfc@opm.gov.*

FOR FURTHER INFORMATION CONTACT: A copy of this ICR, with applicable supporting documentation, may be obtained by contacting the U.S. Office of Personnel Management, Combined Federal Campaign, 1900 E Street NW., Washington, DC 20415, Attention: Marcus Glasgow or sent via electronic mail to *cfc@opm.gov.*

SUPPLEMENTARY INFORMATION: The Combined Federal Campaign (CFC) is the world's largest and most successful annual workplace philanthropic giving campaign, with 135 CFC campaigns throughout the country and overseas raising millions of dollars each year. The mission of the CFC is to promote and support philanthropy through a program that is employee focused, cost-efficient, and effective in providing all federal employees the opportunity to improve the quality of life for all.

The Combined Federal Campaign eligibility applications are used to review the eligibility of national, international, and local charitable organizations that wish to participate in the Combined Federal Campaign. The proposed revisions reflect changes in federal regulations at 5 CFR 950 from the Office of Personnel Management published in the **Federal Register** on Thursday, April 17, 2014 (76 FR 21581). The forms in this information collection and their proposed statuses are as follows:

- *OPM Form 1647–A* (CFC National/International Independent Organization and Federation Member Application)—Change to online form: OPM Form

1647–A CFC Independent Organization and Federation Member Application

- *OPM Form 1647–B* (CFC National/International Federation Application)—Change to online form: OPM Form 1647–B CFC Federation Application
- *OPM Form 1647–C* (CFC Local Independent Organization and Federation Member Application)—Discontinue use
- *OPM Form 1647–D* (CFC Local Federation Application)—Discontinue use
- *OPM Form 1647–E* (CFC Family Support and Youth Activities Application)—Change to online form: OPM Form 1647–E CFC Family Support and Youth Activities Application

Analysis

Agency: Combined Federal Campaign, Office of Personnel Management.

Title: OPM Forms 1647–A, –B, and –E.

OMB Number: OMB Control No. 3206–0131.

Frequency: Annually.

Affected Public: Individuals or Households.

Number of Respondents: 1647–A and –B: 20,000 (combined); OPM Form 1647–E: 500.

Estimated Time per Respondent: 1647–A and –B: 2 hours; OPM Form 1647–E: 1 hour.

Total Burden Hours: 40,500 hours.

U.S. Office of Personnel Management.

Beth F. Cobert,

Acting Director.

[FR Doc. 2016–05456 Filed 3–9–16; 8:45 am]

BILLING CODE 6325–46–P

POSTAL REGULATORY COMMISSION

[Docket Nos. MC2016–92 and CP2016–117; Order No. 3132]

New Postal Product

AGENCY: Postal Regulatory Commission.

ACTION: Notice.

SUMMARY: The Commission is noticing a recent Postal Service filing concerning the addition of Priority Mail Contract 195 negotiated service agreement to the competitive product list. This notice informs the public of the filing, invites public comment, and takes other administrative steps.

DATES: *Comments are due:* March 14, 2016.

ADDRESSES: Submit comments electronically via the Commission's Filing Online system at *http://www.prc.gov.* Those who cannot submit comments electronically should contact the person identified in the **FOR FURTHER INFORMATION CONTACT** section by telephone for advice on filing alternatives.

FOR FURTHER INFORMATION CONTACT: David A. Trissell, General Counsel, at 202–789–6820.

SUPPLEMENTARY INFORMATION:

Table of Contents

I. Introduction
II. Notice of Commission Action
III. Ordering Paragraphs

I. Introduction

In accordance with 39 U.S.C. 3642 and 39 CFR 3020.30–35, the Postal Service filed a formal request and associated supporting information to add Priority Mail Contract 195 to the competitive product list.[1]

The Postal Service contemporaneously filed a redacted contract related to the proposed new product under 39 U.S.C. 3632(b)(3) and 39 CFR 3015.5. Request, Attachment B.

To support its Request, the Postal Service filed a copy of the contract, a copy of the Governors' Decision authorizing the product, proposed changes to the Mail Classification Schedule, a Statement of Supporting Justification, a certification of compliance with 39 U.S.C. 3633(a), and an application for non-public treatment of certain materials. It also filed supporting financial workpapers.

II. Notice of Commission Action

The Commission establishes Docket Nos. MC2016–92 and CP2016–117 to consider the Request pertaining to the proposed Priority Mail Contract 195 product and the related contract, respectively.

The Commission invites comments on whether the Postal Service's filings in the captioned dockets are consistent with the policies of 39 U.S.C. 3632, 3633, or 3642, 39 CFR part 3015, and 39 CFR part 3020, subpart B. Comments are due no later than March 14, 2016. The public portions of these filings can be accessed via the Commission's Web site (*http://www.prc.gov*).

The Commission appoints Natalie R. Ward to serve as Public Representative in these dockets.

III. Ordering Paragraphs

It is ordered:

1. The Commission establishes Docket Nos. MC2016–92 and CP2016–117 to consider the matters raised in each docket.

2. Pursuant to 39 U.S.C. 505, Natalie R. Ward is appointed to serve as an officer of the Commission to represent the interests of the general public in these proceedings (Public Representative).

3. Comments are due no later than March 14, 2016.

4. The Secretary shall arrange for publication of this order in the **Federal Register**.

By the Commission.

Stacy L. Ruble,

Secretary.

[FR Doc. 2016–05403 Filed 3–9–16; 8:45 am]

BILLING CODE 7710–FW–P

[1] Request of the United States Postal Service to Add Priority Mail Contract 195 to Competitive Product List and Notice of Filing (Under Seal) of Unredacted Governors' Decision, Contract, and Supporting Data, March 4, 2016 (Request).

POSTAL REGULATORY COMMISSION

[Docket Nos. MC2016–91 and CP2016–116; Order No. 3129]

New Postal Product

AGENCY: Postal Regulatory Commission.

ACTION: Notice.

SUMMARY: The Commission is noticing a recent Postal Service filing concerning the addition of Priority Mail Contract 194 negotiated service agreement to the competitive product list. This notice informs the public of the filing, invites public comment, and takes other administrative steps.

DATES: Comments are due: March 14, 2016.

ADDRESSES: Submit comments electronically via the Commission's Filing Online system at *http://www.prc.gov.* Those who cannot submit comments electronically should contact the person identified in the **FOR FURTHER INFORMATION CONTACT** section by telephone for advice on filing alternatives.

FOR FURTHER INFORMATION CONTACT: David A. Trissell, General Counsel, at 202–789–6820.

SUPPLEMENTARY INFORMATION:

Table of Contents

I. Introduction
II. Notice of Commission Action
III. Ordering Paragraphs

I. Introduction

In accordance with 39 U.S.C. 3642 and 39 CFR 3020.30–35, the Postal Service filed a formal request and associated supporting information to add Priority Mail Contract 194 to the competitive product list.[1]

[1] Request of the United States Postal Service to Add Priority Mail Contract 194 to Competitive

The Postal Service contemporaneously filed a redacted contract related to the proposed new product under 39 U.S.C. 3632(b)(3) and 39 CFR 3015.5. Request, Attachment B.

To support its Request, the Postal Service filed a copy of the contract, a copy of the Governors' Decision authorizing the product, proposed changes to the Mail Classification Schedule, a Statement of Supporting Justification, a certification of compliance with 39 U.S.C. 3633(a), and an application for non-public treatment of certain materials. It also filed supporting financial workpapers.

II. Notice of Commission Action

The Commission establishes Docket Nos. MC2016–91 and CP2016–116 to consider the Request pertaining to the proposed Priority Mail Contract 194 product and the related contract, respectively.

The Commission invites comments on whether the Postal Service's filings in the captioned dockets are consistent with the policies of 39 U.S.C. 3632, 3633, or 3642, 39 CFR part 3015, and 39 CFR part 3020, subpart B. Comments are due no later than March 14, 2016. The public portions of these filings can be accessed via the Commission's Web site (*http://www.prc.gov*).

The Commission appoints Lyudmila Y. Bzhilyanskaya to serve as Public Representative in these dockets.

III. Ordering Paragraphs

It is ordered:

1. The Commission establishes Docket Nos. MC2016–91 and CP2016–116 to consider the matters raised in each docket.

2. Pursuant to 39 U.S.C. 505, Lyudmila Y. Bzhilyanskaya is appointed to serve as an officer of the Commission to represent the interests of the general public in these proceedings (Public Representative).

3. Comments are due no later than March 14, 2016.

4. The Secretary shall arrange for publication of this order in the **Federal Register**.

By the Commission.

Stacy L. Ruble,

Secretary.

[FR Doc. 2016–05402 Filed 3–9–16; 8:45 am]

BILLING CODE 7710–FW–P

Product List and Notice of Filing (Under Seal) of Unredacted Governors' Decision, Contract, and Supporting Data, March 4, 2016 (Request).

POSTAL REGULATORY COMMISSION

[Docket Nos. MC2016–90 and CP2016–115; Order No. 3128]

New Postal Product

AGENCY: Postal Regulatory Commission.

ACTION: Notice.

SUMMARY: The Commission is noticing a recent Postal Service filing concerning the addition of Priority Mail Contract 193 negotiated service agreement to the competitive product list. This notice informs the public of the filing, invites public comment, and takes other administrative steps.

DATES: Comments are due: March 14, 2016.

ADDRESSES: Submit comments electronically via the Commission's Filing Online system at *http://www.prc.gov.* Those who cannot submit comments electronically should contact the person identified in the **FOR FURTHER INFORMATION CONTACT** section by telephone for advice on filing alternatives.

FOR FURTHER INFORMATION CONTACT: David A. Trissell, General Counsel, at 202–789–6820.

SUPPLEMENTARY INFORMATION:

Table of Contents

I. Introduction
II. Notice of Commission Action
III. Ordering Paragraphs

I. Introduction

In accordance with 39 U.S.C. 3642 and 39 CFR 3020.30–35, the Postal Service filed a formal request and associated supporting information to add Priority Mail Contract 193 to the competitive product list.[1]

The Postal Service contemporaneously filed a redacted contract related to the proposed new product under 39 U.S.C. 3632(b)(3) and 39 CFR 3015.5. Request, Attachment B.

To support its Request, the Postal Service filed a copy of the contract, a copy of the Governors' Decision authorizing the product, proposed changes to the Mail Classification Schedule, a Statement of Supporting Justification, a certification of compliance with 39 U.S.C. 3633(a), and an application for non-public treatment of certain materials. It also filed supporting financial workpapers.

[1] Request of the United States Postal Service to Add Priority Mail Contract 193 to Competitive Product List and Notice of Filing (Under Seal) of Unredacted Governors' Decision, Contract, and Supporting Data, March 4, 2016 (Request).

II. Notice of Commission Action

The Commission establishes Docket Nos. MC2016–90 and CP2016–115 to consider the Request pertaining to the proposed Priority Mail Contract 193 product and the related contract, respectively.

The Commission invites comments on whether the Postal Service's filings in the captioned dockets are consistent with the policies of 39 U.S.C. 3632, 3633, or 3642, 39 CFR part 3015, and 39 CFR part 3020, subpart B. Comments are due no later than March 14, 2016. The public portions of these filings can be accessed via the Commission's Web site (*http://www.prc.gov*).

The Commission appoints Lyudmila Y. Bzhilyanskaya to serve as Public Representative in these dockets.

III. Ordering Paragraphs

It is ordered:

1. The Commission establishes Docket Nos. MC2016–90 and CP2016–115 to consider the matters raised in each docket.

2. Pursuant to 39 U.S.C. 505, Lyudmila Y. Bzhilyanskaya is appointed to serve as an officer of the Commission to represent the interests of the general public in these proceedings (Public Representative).

3. Comments are due no later than March 14, 2016.

4. The Secretary shall arrange for publication of this order in the **Federal Register**.

By the Commission.

Stacy L. Ruble,

Secretary.

[FR Doc. 2016–05401 Filed 3–9–16; 8:45 am]

BILLING CODE 7710–FW–P

SECURITIES AND EXCHANGE COMMISSION

[Release No. 34–77298; File No. SR–EDGX–2016–14]

Self-Regulatory Organizations; EDGX Exchange, Inc.; Notice of Filing and Immediate Effectiveness of a Proposed Rule Change to Reflect a Legal Name Change by BATS Global Markets, Inc. and the Legal Names of Certain Subsidiaries

March 4, 2016.

Pursuant to section 19(b)(1) of the Securities Exchange Act of 1934 (the ''Act''),[1] and Rule 19b–4 thereunder,[2] notice is hereby given that on February 26, 2016, EDGX Exchange, Inc. f/k/a EDGX Exchange, Inc. (the ''Exchange''

[1] 15 U.S.C. 78s(b)(1).

[2] 17 CFR 240.19b–4.

or ''EDGX'') filed with the Securities and Exchange Commission (''Commission'') the proposed rule change as described in Items I, III and III below, which Items have been prepared by the Exchange. The Exchange has designated this proposal as one being concerned solely with the administration of the Exchange pursuant to section 19(b)(3)(A)(iii) of the Act[3] and Rule 19b–4(f)(3) thereunder,[4] which renders the proposal effective upon filing with the Commission. The Commission is publishing this notice to solicit comments on the proposed rule change from interested persons.

I. Self-Regulatory Organization's Statement of the Terms of Substance of the Proposed Rule Change

The Exchange is proposing a rule change to amend its rules as well as certain corporate documents of the Exchange to reflect a legal name change by the Exchange's ultimate parent entity, BATS Global Markets, Inc. (the ''Parent'') to Bats Global Markets, Inc., and the legal names of certain of the Parent's subsidiaries. As a result of this change, the Exchange also proposes to amend its rules to change its name from EDGX Exchange, Inc. to Bats EDGX Exchange, Inc. throughout its rules and corporate documents.

The text of the proposed rule change is available at the Exchange's Web site at *www.batstrading.com,* at the principal office of the Exchange, and at the Commission's Public Reference Room.

II. Self-Regulatory Organization's Statement of the Purpose of, and Statutory Basis for, the Proposed Rule Change

In its filing with the Commission, the Exchange included statements concerning the purpose of and basis for the proposed rule change and discussed any comments it received on the proposed rule change. The text of these statements may be examined at the places specified in Item IV below. The Exchange has prepared summaries, set forth in Sections A, B, and C below, of the most significant parts of such statements.

A. Self-Regulatory Organization's Statement of the Purpose of, and the Statutory Basis for, the Proposed Rule Change

1. Purpose

The Exchange, on behalf of its Parent, recently filed to change the Parent's legal name from ''BATS Global Markets, Inc.'' to ''Bats Global Markets, Inc.''[5] For the purposes of consistency, certain of the Parent's subsidiaries have also undertaken to change their legal names. As a result, the Exchange also proposes to change its name from EDGX Exchange, Inc. to Bats EDGX Exchange, Inc. throughout its rules and corporate documents (collectively, with the other legal name changes for Parent and certain of its subsidiaries, the ''name changes'').[6] Therefore, the Exchange proposes to amend its: (i) Rulebook; (ii) fee schedules applicable to its equity and options platforms issued pursuant to Exchange Rules 15.1(a) and (c) (''Fee Schedules''); (iii) Restated Certificate of Incorporation (''Certificate''); and (iv) Fourth Amended and Restated Bylaws of the Exchange (''Bylaws'') (collectively, the ''Operative Documents'') to reflect the name change and to replace all references to ''BATS'' with ''Bats''.

The Exchange proposes to replace all references to BATS with Bats throughout the Exchange's Rulebook and Fee Schedules. The Exchange understands that its affiliated Exchanges also intend to file similar proposed rule changes with the Commission to amend their exchange names.[7] Therefore, the Exchange proposes to amend the following rules to reflect the name changes, including the expected filings by its affiliates to amend their names: Rule 1.5 (Definitions), Rule 2.3 (Member Eligibility), Rule 2.10 (Affiliation Between Exchange and a Member), Rule 2.11 (BATS Trading, Inc. as Outbound Router), Rule 2.12 (BATS Trading, Inc. as Inbound Router), Rule 11.11 (Routing to Away Trading Centers), Rule 13.4 (Usage of Data Feeds), Rule 13.8 (EDGX Book Feeds), Rule 13.9 (BATS Connect), Rule 14.2 (Investment Company Units), Rule 14.8 (Portfolio Depository Receipts), Rule 16.1 (Definitions), and Rule 21.9 (Order Routing). Throughout these rules, the Exchange proposes the following changes:

- All references to ''EDGX Exchange'', ''EDGX EXCHANGE'' and ''EDGX EXCHANGE, Inc.'' are proposed to be changed to ''Bats EDGX Exchange, Inc.'';[8]
- All references to ''EDGX'' in Rule 13.8 are proposed to be changed to ''the Exchange'';
- All references to ''BATS'' are proposed to be changed to ''Bats'';
- All references to the Parent are proposed to be changed to ''Bats Global Markets, Inc.'' (which includes changes from ''BATS'' to ''Bats'' as well as the correction of pre-existing errors in such references);
- All references to ''BATS Exchange, Inc.'' are proposed to be changed to ''Bats BZX Exchange, Inc.'';
- All references to ''BATS Y–Exchange, Inc.'' are proposed to be changed to ''Bats BYX Exchange, Inc.'';
- All references to ''EDGA Exchange, Inc.'' are proposed to be changed to ''Bats EDGA Exchange, Inc.''

In addition to these changes, the Exchange proposes to modify its Fee Schedules to reflect the name change of the Exchange to Bats EDGX Exchange[9] and to change all references to ''BATS'' to instead refer to ''Bats''. The Exchange also proposes on its Fee Schedules to refer to its affiliates, Bats BZX Exchange, Inc. and Bats BYX Exchange, Inc. (as each is proposed to be re-named), simply as ''BZX'' and ''BYX'', respectively. The Exchange believes that this is more consistent with other references on the Fee Schedules, such as the general references to ''EDGA'', which refer to the Exchange's affiliate, Bats EDGA Exchange, Inc. (as proposed to be re-named).

The Exchange also proposes to amend Article First of the Certificate to change the name of the Exchange to Bats EDGX Exchange, Inc. and make conforming changes throughout, including the title of the Certificate. The Exchange proposes to amend the Bylaws to amend the title to reflect that the Bylaws will be titled the ''FIFTH AMENDED AND RESTATED BYLAWS OF BATS EDGX EXCHANGE, INC.'' The Exchange also proposes to amend Article I, paragraph (f) and Article XI, section 2 to reflect the name changes.

The name change from EDGX Exchange, Inc. to Bats EDGX Exchange, Inc. is a non-substantive change. No changes to the ownership or structure of

[3] 15 U.S.C. 78s(b)(3)(A)(iii).

[4] 17 CFR 240.19b–4(f)(3).

[5] *See* Securities Exchange Act Release No. 77147 (February 16, 2016) (SR–EDGX–2016–04).

[6] The Exchange initially filed the proposed fee [sic] change on February 19, 2016 (SR–BYX–2016–06). On February 26, 2016, the Exchange withdrew that filing and submitted this filing.

[7] The Exchange's affiliates are EDGA Exchange, Inc., BATS Exchange, Inc. and BATS Y-Exchange, Inc. The Exchange understands that proposed rule changes are to be filed by each of its affiliates to amend their names as follows: EDGA Exchange, Inc. would be changed to Bats EDGA Exchange, Inc., BATS Exchange, Inc. would be amended to Bats BZX Exchange, Inc., and BATS Y-Exchange, Inc. would be amended to Bats BYX Exchange, Inc.

[8] The Exchange does not propose to amend the name of EDGX Options within its Rulebook and but does propose to amend the title of its options fee schedule to replace ''BATS'' with ''Bats''.

[9] The Exchange notes that the Exchange will continue to be referred to as ''EDGX'' in certain areas of the Fee Schedules. These areas of the Fee Schedules are: (i) The Fee Codes and Associated Fees table; (ii) footnote 1 under Membership Fees; (iii) Bats Connect pricing table; and (iv) Unicast Access—Order Entry.

the Exchange or BATS Global Markets, Inc. have taken place.

2. Statutory Basis

The Exchange believes that its proposal is consistent with section 6(b) of the Act,[10] in general, and furthers the objectives of section 6(b)(5) of the Act,[11] in particular, in that it is designed to promote just and equitable principles of trade, to remove impediments to and perfect the mechanism of a free and open market and a national market system, and, in general to protect investors and the public interest. The Exchange also believes that the proposed rule change is consistent with section 6(b)(1) of the Act[12] in that it is designed to continue to ensure that the Exchange is so organized and has the capacity to carry out the purposes of Act and to comply, and enforce compliance by its members with the provisions of the Act and the rules and regulations thereunder, and rules of the Exchange. The Exchange is proposing amendments to the Operative Documents to effectuate its name change to Bats EDGX Exchange, Inc. and to reflect the name changes of its affiliates. These changes are limited to capitalization and ministerial name changes and to reflect similar proposed rule changes to be submitted to the Commission by the Exchange's affiliates. The Exchange believes that the changes will protect investors and the public interest by eliminating confusion that may exist because of differences between its corporate name and the new naming conventions of the Parent and its subsidiaries, including the Exchange.

B. Self-Regulatory Organization's Statement on Burden on Competition

Because the rule change proposes ministerial changes related to the administration, and not the governance or operation, of the Exchange, the Exchange does not believe that the proposed rule change will impose any burden on competition not necessary or appropriate in furtherance of the purposes of the Act.

C. Self-Regulatory Organization's Statement on Comments on the Proposed Rule Change Received From Members, Participants, or Others

The Exchange has not solicited, and does not intend to solicit, comments on this proposed rule change. The Exchange has not received any unsolicited written comments from Members or other interested parties.

[10] 15 U.S.C. 78f.

[11] 15 U.S.C. 78f(b)(5).

[12] 15 U.S.C. 78f(b)(1).

III. Date of Effectiveness of the Proposed Rule Change and Timing for Commission Action

Because it is concerned solely with the administration of the Exchange, the foregoing proposed rule change has become effective pursuant to section 19(b)(3)(A)(iii) of the Act[13] and Rule 19b–4(f)(3) thereunder.[14]

At any time within 60 days of the filing of the proposed rule change, the Commission summarily may temporarily suspend such rule change if it appears to the Commission that such action is: (1) Necessary or appropriate in the public interest; (2) for the protection of investors; or (3) otherwise in furtherance of the purposes of the Act. If the Commission takes such action, the Commission shall institute proceedings to determine whether the proposed rule should be approved or disapproved.

IV. Solicitation of Comments

Interested persons are invited to submit written data, views, and arguments concerning the foregoing, including whether the proposed rule change is consistent with the Act. Comments may be submitted by any of the following methods:

Electronic Comments

- Use the Commission's Internet comment form (*http://www.sec.gov/rules/sro.shtml*); or
- Send an email to *rule-comments@sec.gov.* Please include File Number SR–EDGX–2016–14 on the subject line.

Paper Comments

- Send paper comments in triplicate to Secretary, Securities and Exchange Commission, 100 F Street NE., Washington, DC 20549–1090.

All submissions should refer to File Number SR–EDGX–2016–14. This file number should be included on the subject line if email is used. To help the Commission process and review your comments more efficiently, please use only one method. The Commission will post all comments on the Commission's Internet Web site (*http://www.sec.gov/rules/sro.shtml).* Copies of the submission, all subsequent amendments, all written statements with respect to the proposed rule change that are filed with the Commission, and all written communications relating to the proposed rule change between the Commission and any person, other than those that may be withheld from the public in accordance with the provisions of 5 U.S.C. 552, will be available for Web site viewing and printing in the Commission's Public Reference Room, 100 F Street NE., Washington, DC 20549, on official business days between the hours of 10:00 a.m. and 3:00 p.m. Copies of the filing also will be available for inspection and copying at the principal office of the Exchange. All comments received will be posted without change; the Commission does not edit personal identifying information from submissions. You should submit only information that you wish to make available publicly. All submissions should refer to File Number SR–EDGX–2016–14, and should be submitted on or before March 31,2016.

For the Commission, by the Division of Trading and Markets, pursuant to delegated authority.[15]

Brent J. Fields,

Secretary.

[FR Doc. 2016–05327 Filed 3–9–16; 8:45 am]

BILLING CODE 8011–01–P

[13] 15 U.S.C. 78s(b)(3)(A)(iii).

[14] 17 CFR 240.19b–4(f)(3).

[15] 17 CFR 200.30–3(a)(12).

SECURITIES AND EXCHANGE COMMISSION

[Release No. 34–77299; File No. SR–EDGA–2016–05]

Self-Regulatory Organizations; EDGA Exchange, Inc.; Notice of Filing and Immediate Effectiveness of a Proposed Rule Change To Amend its Rules as Well as Certain Corporate Documents of the Exchange To Reflect a Legal Name Change by BATS Global Markets, Inc. and the Legal Names of Certain Subsidiaries

March 4, 2016.

Pursuant to Section 19(b)(1) of the Securities Exchange Act of 1934 (the ''Act''),[1] and Rule 19b–4 thereunder,[2] notice is hereby given that on February 26, 2016, EDGA Exchange, Inc. f/k/a EDGA Exchange, Inc. (the ''Exchange'' or ''EDGA'') filed with the Securities and Exchange Commission (''Commission'') the proposed rule change as described in Items I, II, and III below, which Items have been prepared by the Exchange. The Exchange has designated this proposal as one being concerned solely with the administration of the Exchange pursuant to Section 19(b)(3)(A)(iii) of the Act[3] and Rule 19b–4(f)(3) thereunder,[4] which renders the proposal effective upon filing with the Commission. The Commission is

[1] 15 U.S.C. 78s(b)(1).

[2] 17 CFR 240.19b–4.

[3] 15 U.S.C. 78s(b)(3)(A)(iii).

[4] 17 CFR 240.19b–4(f)(3).

publishing this notice to solicit comments on the proposed rule change from interested persons.

I. Self-Regulatory Organization's Statement of the Terms of Substance of the Proposed Rule Change

The Exchange is proposing a rule change to amend its rules as well as certain corporate documents of the Exchange to reflect a legal name change by the Exchange's ultimate parent entity, BATS Global Markets, Inc. (the ''Parent'') to Bats Global Markets, Inc., and the legal names of certain of the Parent's subsidiaries. As a result of this change, the Exchange also proposes to amend its rules to change its name from EDGA Exchange, Inc. to Bats EDGA Exchange, Inc. throughout its rules and corporate documents.

The text of the proposed rule change is available at the Exchange's Web site at *www.batstrading.com*, at the principal office of the Exchange, and at the Commission's Public Reference Room.

II. Self-Regulatory Organization's Statement of the Purpose of, and Statutory Basis for, the Proposed Rule Change

In its filing with the Commission, the Exchange included statements concerning the purpose of and basis for the proposed rule change and discussed any comments it received on the proposed rule change. The text of these statements may be examined at the places specified in Item IV below. The Exchange has prepared summaries, set forth in Sections A, B, and C below, of the most significant parts of such statements.

A. Self-Regulatory Organization's Statement of the Purpose of, and the Statutory Basis for, the Proposed Rule Change

1. Purpose

The Exchange, on behalf of its Parent, recently filed to change the Parent's legal name from ''BATS Global Markets, Inc.'' to ''Bats Global Markets, Inc.'' [5] For the purposes of consistency, certain of the Parent's subsidiaries have also undertaken to change their legal names. As a result, the Exchange also proposes to change its name from EDGA Exchange, Inc. to Bats EDGA Exchange, Inc. throughout its rules and corporate documents (collectively, with the other legal name changes for Parent and certain of its subsidiaries, the ''name changes'').[6] Therefore, the Exchange proposes to amend its: (i) Rulebook; (ii) fee schedule issued pursuant to Exchange Rules 15.1(a) and (c) (''Fee Schedule''); (iii) Restated Certificate of Incorporation (''Certificate''); and (iv) Fourth Amended and Restated Bylaws of the Exchange (''Bylaws'') (collectively, the ''Operative Documents'') to reflect the name change and to replace all references to ''BATS'' with ''Bats''.

The Exchange proposes to replace all references to BATS with Bats throughout the Exchange's Rulebook and Fee Schedule. The Exchange understands that its affiliated Exchanges also intend to file similar proposed rule changes with the Commission to amend their exchange names.[7] Therefore, the Exchange proposes to amend the following rules to reflect the name changes, including the expected filings by its affiliates to amend their names: Rule 1.5 (Definitions), Rule 2.3 (Member Eligibility), Rule 2.10 (Affiliation Between Exchange and a Member), Rule 2.11 (BATS Trading, Inc. as Outbound Router), Rule 2.12 (BATS Trading, Inc. as Inbound Router), Rule 11.11 (Routing to Away Trading Centers), Rule 13.4 (Usage of Data Feeds), Rule 13.8 (EDGA Book Feeds), Rule 13.9 (BATS Connect), Rule 14.2 (Investment Company Units), and Rule 14.8 (Portfolio Depository Receipts). Throughout these rules, the Exchange proposes the following changes:

- All references to ''EDGA EXCHANGE'' and ''EDGA EXCHANGE, Inc.'' are proposed to be changed to ''Bats EDGA Exchange'' and ''Bats EDGA Exchange, Inc.'', respectively;
- All references to ''EDGA'' in Rule 13.8 are proposed to be changed to ''the Exchange'';
- All references to ''BATS'' are proposed to be changed to ''Bats'';
- All references to the Parent are proposed to be changed to ''Bats Global Markets, Inc.'' (which includes changes from ''BATS'' to ''Bats'' as well as the correction of pre-existing errors in such references);
- All references to ''BATS Exchange, Inc.'' are proposed to be changed to ''Bats BZX Exchange, Inc.'';
- All references to ''BATS Y–Exchange, Inc.'' are proposed to be changed to ''Bats BYX Exchange, Inc.'';
- All references to ''EDGX Exchange, Inc.'' are proposed to be changed to ''Bats EDGX Exchange, Inc.''

In addition to these changes, the Exchange proposes to modify its Fee Schedule to reflect the name change of the Exchange to Bats EDGA Exchange [8] and to change all references to ''BATS'' to instead refer to ''Bats''. The Exchange also proposes on its Fee Schedule to refer to its affiliates, Bats BZX Exchange, Inc. and Bats BYX Exchange, Inc. (as each is proposed to be re-named), simply as ''BZX'' and ''BYX'', respectively. The Exchange believes that this is more consistent with other references on the Fee Schedule, such as the general references to ''EDGX'', which refer to the Exchange's affiliate, Bats EDGX Exchange, Inc. (as proposed to be re-named).

The Exchange also proposes to amend Article First of the Certificate to change the name of the Exchange to Bats EDGA Exchange, Inc. and make conforming changes throughout, including the title of the Certificate. The Exchange proposes to amend the Bylaws to amend the title to reflect that the Bylaws will be titled the ''FIFTH AMENDED AND RESTATED BYLAWS OF BATS EDGA EXCHANGE, INC.'' The Exchange also proposes to amend Article I, paragraph (f) and Article XI, Section 2 to reflect the name changes.

The name change from EDGA Exchange, Inc. to Bats EDGA Exchange, Inc. is a non-substantive change. No changes to the ownership or structure of the Exchange or BATS Global Markets, Inc. have taken place.

2. Statutory Basis

The Exchange believes that its proposal is consistent with Section 6(b) of the Act,[9] in general, and furthers the objectives of Section 6(b)(5) of the Act,[10] in particular, in that it is designed to promote just and equitable principles of trade, to remove impediments to and perfect the mechanism of a free and open market and a national market system, and, in general to protect investors and the public interest. The Exchange also believes that the proposed rule change is consistent with Section 6(b)(1) of the Act [11] in that it is

[5] *See* Securities Exchange Act Release No. 77146 (February 16, 2016) (SR–EDGA–2016–01).

[6] The Exchange initially filed the proposed fee [sic] change on February 19, 2016 (SR–EDGA–2016–04). On February 26, 2016, the Exchange withdrew that filing and submitted this filing.

[7] The Exchange's affiliates are EDGX Exchange, Inc., BATS Exchange, Inc. and BATS Y-Exchange, Inc. The Exchange understands that proposed rule changes are to be filed by each of its affiliates to amend their names as follows: EDGX Exchange, Inc. would be changed to Bats EDGX Exchange, Inc., BATS Exchange, Inc. would be amended to Bats BZX Exchange, Inc., and BATS Y-Exchange, Inc. would be amended to Bats BYX Exchange, Inc.

[8] The Exchange notes that the Exchange will continue to be referred to as ''EDGA'' in certain areas of the Fee Schedule. These areas of the Fee Schedule are: (i) The Fee Codes and Associated Fees table; (ii) footnote 1 under Membership Fees; (iii) Bats Connect pricing table; and (iv) Unicast Access—Order Entry.

[9] 15 U.S.C. 78f.

[10] 15 U.S.C. 78f(b)(5).

[11] 15 U.S.C. 78f(b)(1).

designed to continue to ensure that the Exchange is so organized and has the capacity to carry out the purposes of Act and to comply, and enforce compliance by its members with the provisions of the Act and the rules and regulations thereunder, and rules of the Exchange. The Exchange is proposing amendments to the Operative Documents to effectuate its name change to Bats EDGA Exchange, Inc. and to reflect the name changes of its affiliates. These changes are limited to capitalization and ministerial name changes and to reflect similar proposed rule changes to be submitted to the Commission by the Exchange's affiliates. The Exchange believes that the changes will protect investors and the public interest by eliminating confusion that may exist because of differences between its corporate name and the new naming conventions of the Parent and its subsidiaries, including the Exchange.

B. Self-Regulatory Organization's Statement on Burden on Competition

Because the rule change proposes ministerial changes related to the administration, and not the governance or operation, of the Exchange, the Exchange does not believe that the proposed rule change will impose any burden on competition not necessary or appropriate in furtherance of the purposes of the Act.

C. Self-Regulatory Organization's Statement on Comments on the Proposed Rule Change Received From Members, Participants, or Others

The Exchange has not solicited, and does not intend to solicit, comments on this proposed rule change. The Exchange has not received any unsolicited written comments from Members or other interested parties.

III. Date of Effectiveness of the Proposed Rule Change and Timing for Commission Action

Because it is concerned solely with the administration of the Exchange, the foregoing proposed rule change has become effective pursuant to Section 19(b)(3)(A)(iii) of the Act [12] and Rule 19b–4(f)(3) thereunder.[13]

At any time within 60 days of the filing of the proposed rule change, the Commission summarily may temporarily suspend such rule change if it appears to the Commission that such action is: (1) Necessary or appropriate in the public interest; (2) for the protection of investors; or (3) otherwise in furtherance of the purposes of the Act. If the Commission takes such action, the Commission shall institute proceedings to determine whether the proposed rule should be approved or disapproved.

IV. Solicitation of Comments

Interested persons are invited to submit written data, views, and arguments concerning the foregoing, including whether the proposed rule change is consistent with the Act. Comments may be submitted by any of the following methods:

Electronic Comments

- Use the Commission's Internet comment form (*http://www.sec.gov/rules/sro.shtml*); or
- Send an email to *rule-comments@sec.gov.* Please include File Number SR–EDGA–2016–05 on the subject line.

Paper Comments

- Send paper comments in triplicate to Secretary, Securities and Exchange Commission, 100 F Street NE., Washington, DC 20549–1090.

All submissions should refer to File Number SR–EDGA–2016–05. This file number should be included on the subject line if email is used. To help the Commission process and review your comments more efficiently, please use only one method. The Commission will post all comments on the Commission's Internet Web site (*http://www.sec.gov/rules/sro.shtml*). Copies of the submission, all subsequent amendments, all written statements with respect to the proposed rule change that are filed with the Commission, and all written communications relating to the proposed rule change between the Commission and any person, other than those that may be withheld from the public in accordance with the provisions of 5 U.S.C. 552, will be available for Web site viewing and printing in the Commission's Public Reference Room, 100 F Street NE., Washington, DC 20549, on official business days between the hours of 10:00 a.m. and 3:00 p.m. Copies of the filing also will be available for inspection and copying at the principal office of the Exchange. All comments received will be posted without change; the Commission does not edit personal identifying information from submissions. You should submit only information that you wish to make available publicly. All submissions should refer to File Number SR–EDGA–2016–05, and should be submitted on or before March 31, 2016.

For the Commission, by the Division of Trading and Markets, pursuant to delegated authority.[14]

Brent J. Fields,

Secretary.

[FR Doc. 2016–05328 Filed 3–9–16; 8:45 am]

BILLING CODE 8011–01–P

[12] 15 U.S.C. 78s(b)(3)(A)(iii).

[13] 17 CFR 240.19b–4(f)(3).

[14] 17 CFR 200.30–3(a)(12).

SECURITIES AND EXCHANGE COMMISSION

[SEC File No. 270–523, OMB Control No. 3235–0585]

Submission for OMB Review; Comment Request

Upon Written Request, Copies Available From: Securities and Exchange Commission, Office of FOIA Services, 100 F Street NE., Washington, DC 20549–2736.

Extension: Rule 206(4)–7.

Notice is hereby given that, pursuant to the Paperwork Reduction Act of 1995 (44 U.S.C. 3501 *et seq.*), the Securities and Exchange Commission (the ''Commission'') has submitted to the Office of Management and Budget (''OMB'') a request for extension of the previously approved collection of information discussed below.

The title for the collection of information is ''Investment Advisers Act rule 206(4)–7 (17 CFR 275.206(4)–7), Compliance procedures and practices.'' Rule 206(4)–7 requires each investment adviser registered with the Commission to (i) adopt and implement internal compliance policies and procedures, (ii) review those policies and procedures annually, (iii) designate a chief compliance officer, and (iv) maintain certain compliance records. Rule 206(4)–7 is designed to protect investors by fostering better compliance with the securities laws. The collection of information under rule 206(4)–7 is necessary to assure that investment advisers maintain comprehensive internal programs that promote the advisers' compliance with the Investment Advisers Act of 1940. The information collection in the rule also assists the Commission's examination staff in assessing the adequacy advisers' compliance programs. This collection of information is found at 17 CFR 275.206(4)–7 and is mandatory.

The information documented pursuant to rule 206(4)–7 is reviewed by the Commission's examination staff; it will be accorded the same level of confidentiality accorded to other responses provided to the Commission in the context of its examination and

oversight program. An agency may not conduct or sponsor, and a person is not required to respond to, a collection of information unless it displays a currently valid control number.

The respondents to this information collection are investment advisers registered with the Commission. Our latest data indicate that there were 12,026 advisers registered with the Commission as of November 1, 2015. The Commission has estimated that compliance with rule 206(4)–7 imposes an annual burden of approximately 87 hours per respondent. Based on this figure, the Commission estimates a total annual burden of 1,046,262 hours for this collection of information.

The public may view the background documentation for this information collection at the following Web site, *www.reginfo.gov.* Comments should be directed to: (i) Desk Officer for the Securities and Exchange Commission, Office of Information and Regulatory Affairs, Office of Management and Budget, Room 10102, New Executive Office Building, Washington, DC 20503, or by sending an email to: *Shagufta_Ahmed@omb.eop.gov;* and (ii) Pamela Dyson, Director/Chief Information Officer, Securities and Exchange Commission, c/o Remi Pavlik-Simon, 100 F Street NE., Washington, DC 20549 or send an email to: *PRA_Mailbox@sec.gov.* Comments must be submitted to OMB within 30 days of this notice.

Dated: March 4, 2016.

Brent J. Fields,

Secretary.

[FR Doc. 2016–05331 Filed 3–9–16; 8:45 am]

BILLING CODE 8011–01–P

SECURITIES AND EXCHANGE COMMISSION

Submission for OMB Review; Comment Request

Upon Written Request, Copies Available From: Securities and Exchange Commission, Office of FOIA Services, 100 F Street NE., Washington, DC 20549–2736.

Extension: Appendix F to Rule 15c3–1; SEC File No. 270–440, OMB Control No. 3235–0496.

Notice is hereby given that, pursuant to the Paperwork Reduction Act of 1995 (44 U.S.C. 3501 *et seq.*) (''PRA''), the Securities and Exchange Commission (''Commission'') has submitted to the Office of Management and Budget (''OMB'') a request for approval of extension of the previously approved collection of information provided for in Appendix F to Rule 15c3–1 (''Appendix F'' or ''Rule 15c3–1f'') (17 CFR 240.15c3–1f) under the Securities Exchange Act of 1934 (15 U.S.C. 78a *et seq.*).

Appendix F requires a broker-dealer choosing to register, upon Commission approval, as an OTC derivatives dealer to develop and maintain an internal risk management system based on Value-at-Risk (''VaR'') models. It is anticipated that a total of one (1) broker-dealer registering as an OTC derivatives dealer will spend 1,000 hours on a one-time basis complying with the system development requirements of Rule 15c3–1f, for an estimated one-time initial startup burden of approximately 1,000 hours. Appendix F also requires the OTC derivatives dealer to maintain its system model according to certain prescribed standards. It is anticipated that the four (4) OTC derivatives dealers currently registered with the Commission will each spend 1,000 hours per year maintaining the system model required by Rule 15c3–1f, for an estimated recurring annual burden of approximately 4,000 hours. It is anticipated that the one (1) broker-dealer registering as an OTC derivatives dealer will spend 1,000 hours maintaining the system model required by Rule 15c3–1f in each year following its registration. Thus, the total industry-wide burden is estimated to be approximately 5,000 hours (4,000 hours + 1,000 hours) for the first year and 5,000 hours for each subsequent year.[1]

The records required to be kept pursuant to Appendix F and results of periodic reviews conducted pursuant to Rule 15c3–4 generally must be preserved under Rule 17a–4 of the Exchange Act (17 CFR 240.17a–4) for a period of not less than three years, the first two years in an easily accessible place. The Commission will not generally publish or make available to any person notices or reports received pursuant to the Rule. The statutory basis for the Commission's refusal to disclose such information to the public is the exemption contained in Section (b)(4) of the Freedom of Information Act (5 U.S.C. 552), which essentially provides that the requirement of public dissemination does not apply to commercial or financial information which is privileged or confidential.

An agency may not conduct or sponsor, and a person is not required to respond to, a collection of information under the PRA unless it displays a currently valid OMB control number.

The public may view background documentation for this information collection at the following Web site, *www.reginfo.gov.* Comments should be directed to: (i) Desk Officer for the Securities and Exchange Commission, Office of Information and Regulatory Affairs, Office of Management and Budget, Room 10102, New Executive Office Building, Washington, DC 20503, or by sending an email to: *Shagufta_Ahmed@omb.eop.gov;* and (ii) Pamela Dyson, Director/Chief Information Officer, Securities and Exchange Commission, c/o Remi Pavlik-Simon, 100 F St NE., Washington, DC 20549 or send an email to *PRA_Mailbox@sec.gov.* Comments must be submitted to OMB within 30 days of this notice.

Dated: March 4, 2016.

Brent J. Fields,

Secretary.

[FR Doc. 2016–05329 Filed 3–9–16; 8:45 am]

BILLING CODE 8011–01–P

[1] The Commission estimates that a total of five entities will be registered as OTC derivatives dealers at the end of the next three years, consisting of the four current OTC derivatives dealers and one anticipated registrant. This is in contrast with the prior estimate of eight OTC derivatives dealers, consisting of four current OTC derivatives dealers and four anticipated registrants.

SECURITIES AND EXCHANGE COMMISSION

[Release No. 34–77293; File No. SR–NYSEMKT–2016–34]

Self-Regulatory Organizations; NYSE MKT LLC; Notice of Filing and Immediate Effectiveness of Proposed Change To Modify the NYSE Amex Options Fee Schedule Relating to ByRDs Transaction Fees

March 4, 2016.

Pursuant to Section 19(b)(1)[1] of the Securities Exchange Act of 1934 (the ''Act'')[2] and Rule 19b–4 thereunder,[3] notice is hereby given that, on March 1, 2016, NYSE MKT LLC (the ''Exchange'' or ''NYSE MKT'') filed with the Securities and Exchange Commission (the ''Commission'') the proposed rule change as described in Items I, II, and III below, which Items have been prepared by the self-regulatory organization. The Commission is publishing this notice to solicit comments on the proposed rule change from interested persons.

I. Self-Regulatory Organization's Statement of the Terms of the Substance of the Proposed Rule Change

The Exchange proposes to modify the NYSE Amex Options Fee Schedule (''Fee Schedule'') to address how the Exchange would treat transactions in

[1] 15 U.S.C. 78s(b)(1).

[2] 15 U.S.C. 78a.

[3] CFR 240.19b–4.

Binary Return Derivatives contracts (''ByRDs''). The Exchange proposes to implement the fee change effective March 1, 2016. The proposed change is available on the Exchange's Web site at *www.nyse.com*, at the principal office of the Exchange, and at the Commission's Public Reference Room.

II. Self-Regulatory Organization's Statement of the Purpose of, and Statutory Basis for, the Proposed Rule Change

In its filing with the Commission, the self-regulatory organization included statements concerning the purpose of, and basis for, the proposed rule change and discussed any comments it received on the proposed rule change. The text of those statements may be examined at the places specified in Item IV below. The Exchange has prepared summaries, set forth in sections A, B, and C below, of the most significant parts of such statements.

A. Self-Regulatory Organization's Statement of the Purpose of, and Statutory Basis for, the Proposed Rule Change

1. Purpose

The purpose of this filing is to propose revisions to the Fee Schedule to address how the Exchange would treat transactions in ByRDs.

The Exchange added rules related to ByRDs in 2007 and plans to re-launch trading in ByRDs in March 2016.[4] To encourage trading in ByRDs, the Exchange proposes to exempt transactions in ByRds from all transaction fees and credits at this time. The Exchange also proposes that any volume in ByRDs would be included in the calculations to qualify for any volume-based incentives currently being offered on the Exchange. Accordingly, the Exchange proposes to add note 1 [sic] to Section I.A. of the Fee Schedule regarding the Rates for Standard Options transactions to reflect this proposed change.

The Exchange believes the proposed treatment of ByRDs for purposes of the Fee Schedule would further the Exchange's goal of introducing new products to the marketplace by encouraging trading in these products.

2. Statutory Basis

The Exchange believes that the proposed rule change is consistent with Section 6(b) of the Act,[5] in general, and furthers the objectives of Sections 6(b)(4) and (5) of the Act,[6] in particular, because it provides for the equitable allocation of reasonable dues, fees, and other charges among its members, issuers and other persons using its facilities and does not unfairly discriminate between customers, issuers, brokers or dealers.

The Exchange believes the proposed change is reasonable and does not unfairly discriminate between customers, issues, brokers, or dealers, because the Exchange's treatment of ByRDs would apply equally to all market participants that opted to trade ByRDs. Further, the proposed change is reasonable and does not unfairly discriminate because exempting ByRDs from transaction fees, while still including any volume in ByRDs in the calculations to qualify for any volume-based incentives offered on the Exchange would further the Exchange's goal of introducing new products to the marketplace by encouraging trading in these products. To the extent that the proposed change incentivizes any market participants to direct their order flow to the Exchange, all market participants would benefit from increased liquidity and trading opportunities on the Exchange.

B. Self-Regulatory Organization's Statement on Burden on Competition

In accordance with Section 6(b)(8) of the Act,[7] the Exchange does not believe that the proposed rule change will impose any burden on competition that is not necessary or appropriate in furtherance of the purposes of the Act. The Exchange believes that the proposed change is pro-competitive as it would further the Exchange's goal of introducing new products to the marketplace and encouraging trading in these products, which would in turn, benefit market participants. To the extent that this purpose is achieved, all of the Exchange's market participants should benefit from the improved market liquidity. Enhanced market quality and increased transaction volume that results from the anticipated increase in order flow directed to the Exchange will benefit all market participants and improve competition on the Exchange.

The Exchange notes that it operates in a highly competitive market in which market participants can readily favor competing venues. In such an environment, the Exchange must continually review, and consider adjusting, its fees and credits to remain competitive with other exchanges. For the reasons described above, the Exchange believes that the proposed rule change reflects this competitive environment.

C. Self-Regulatory Organization's Statement on Comments on the Proposed Rule Change Received from Members, Participants, or Others

No written comments were solicited or received with respect to the proposed rule change.

III. Date of Effectiveness of the Proposed Rule Change and Timing for Commission Action

The foregoing rule change is effective upon filing pursuant to Section 19(b)(3)(A)[8] of the Act and subparagraph (f)(2) of Rule 19b–4[9] thereunder, because it establishes a due, fee, or other charge imposed by the Exchange.

At any time within 60 days of the filing of such proposed rule change, the Commission summarily may temporarily suspend such rule change if it appears to the Commission that such action is necessary or appropriate in the public interest, for the protection of investors, or otherwise in furtherance of the purposes of the Act. If the Commission takes such action, the Commission shall institute proceedings under Section 19(b)(2)(B)[10] of the Act to determine whether the proposed rule change should be approved or disapproved.

IV. Solicitation of Comments

Interested persons are invited to submit written data, views, and arguments concerning the foregoing, including whether the proposed rule change is consistent with the Act. Comments may be submitted by any of the following methods:

[4] The Exchange adopted ByRDs in 2007 and plans to re-launch trading in ByRDs in March. *See* Securities Exchange Act Release No. 56251 (August 14, 2007), 72 FR 46523 (August 20, 2007)(SR–Amex–2004–27) (Order approving listing of Fixed Return Options (''FROs'')); *see also* Securities Exchange Act Release Nos. 71957 (April 16, 2014), 79 FR 22563 (April 22, 2014) (SR–NYSEMKT–2014–06) (Order approving name change from FROs to Binary Return Derivatives (ByRDs) and re-launch of these products, with certain modifications, and amending Obvious Errors rules to include ByRDs); 77014 (February 2, 2016), 81 FR 6566 (February 8, 2016) (SR–NYSEMKT–2016–16) (immediate effectiveness filing amending amend certain of rules related to ByRDs). ByRDs are European-style option contracts on individual stocks, exchange-traded funds (''ETFs'') and Index-Linked Securities that have a fixed return in cash based on a set strike price; satisfy specified listing criteria; and may only be exercised at expiration pursuant to the Rules of the Options Clearing Corporation (the ''OCC'').

[5] 15 U.S.C. 78f(b).

[6] 15 U.S.C. 78f(b)(4) and (5).

[7] 15 U.S.C. 78f(b)(8).

[8] 15 U.S.C. 78s(b)(3)(A).

[9] 17 CFR 240.19b–4(f)(2).

[10] 15 U.S.C. 78s(b)(2)(B).

Electronic Comments

- Use the Commission's Internet comment form (*http://www.sec.gov/rules/sro.shtml*); or
- Send an email to *rule-comments@sec.gov.* Please include File No. SR–NYSEMKT–2016–34 on the subject line.

Paper Comments

- Send paper comments in triplicate to Secretary, Securities and Exchange Commission, 100 F Street NE., Washington, DC 20549–1090.

All submissions should refer to File No. SR–NYSEMKT–2016–34. This file number should be included on the subject line if email is used. To help the Commission process and review your comments more efficiently, please use only one method. The Commission will post all comments on the Commission's Internet Web site (*http://www.sec.gov/rules/sro.shtml*). Copies of the submission, all subsequent amendments, all written statements with respect to the proposed rule change that are filed with the Commission, and all written communications relating to the proposed rule change between the Commission and any person, other than those that may be withheld from the public in accordance with the provisions of 5 U.S.C. 552, will be available for Web site viewing and printing in the Commission's Public Reference Room, 100 F Street NE., Washington, DC 20549 on official business days between the hours of 10:00 a.m. and 3:00 p.m. Copies of such filing also will be available for inspection and copying at the principal office of the Exchange. All comments received will be posted without change; the Commission does not edit personal identifying information from submissions. You should submit only information that you wish to make available publicly. All submissions should refer to File No. SR–NYSEMKT–2016–34, and should be submitted on or before March 31, 2016.

For the Commission, by the Division of Trading and Markets, pursuant to delegated authority.[11]

Brent J. Fields,

Secretary.

[FR Doc. 2016–05323 Filed 3–9–16; 8:45 am]

BILLING CODE 8011–01–P

[11] 17 CFR 200.30–3(a)(12).

SECURITIES AND EXCHANGE COMMISSION

Sunshine Act Meeting

Notice is hereby given, pursuant to the provisions of the Government in the Sunshine Act, Public Law 94–409, that the Securities and Exchange Commission will hold an Open Meeting on Monday, March 14, 2016 at 10:00 a.m., in the Auditorium, Room L–002.

The subject matter of the Open Meeting will be:

- The Commission will consider whether to approve the 2016 budget of the Public Company Accounting Oversight Board and the related annual accounting support fee for the Board under Section 109 of the Sarbanes-Oxley Act of 2002.

At times, changes in Commission priorities require alterations in the scheduling of meeting items.

For further information and to ascertain what, if any, matters have been added, deleted, or postponed, please contact:

The Office of the Secretary at (202) 551–5400.

Dated: March 7, 2016.

Brent J. Fields,

Secretary.

[FR Doc. 2016–05481 Filed 3–8–16; 11:15 am]

BILLING CODE 8011–01–P

SECURITIES AND EXCHANGE COMMISSION

[Release No. 34–77297; File No. SR–CBOE–2016–014]

Self-Regulatory Organizations; Chicago Board Options Exchange, Incorporated; Notice of Filing and Immediate Effectiveness of Proposed Rule Change Related to Complex Orders

March 4, 2016.

Pursuant to Section 19(b)(1) of the Securities Exchange Act of 1934 (''Act'')[1] and Rule 19b–4 thereunder,[2] notice is hereby given that on February 25, 2016, Chicago Board Options Exchange, Incorporated (''CBOE'' or the ''Exchange'') filed with the Securities and Exchange Commission (''Commission'') the proposed rule change as described in Items I and II below, which Items have been prepared by the Exchange. The Commission is publishing this notice to solicit comments on the proposed rule change from interested persons.

[1] 15 U.S.C. 78s(b)(1).

[2] 17 CFR 240.19b–4.

I. Self-Regulatory Organization's Statement of the Terms of Substance of the Proposed Rule Change

The Exchange seeks to amend its rules related to complex orders. The text of the proposed rule change is provided below.

(additions are *italicized;* deletions are [bracketed])

* * * * *

Chicago Board Options Exchange, Incorporated Rules

* * * * *

Rule 6.53C. Complex Orders on the Hybrid System

(a) Definition: No change.

(b) Types of Complex Orders: No change.

(c) Complex Order Book

No change.

(d) Process for Complex Order RFR Auction: Prior to routing to the COB or once on PAR, eligible complex orders may be subject to an automated request for responses (''RFR'') auction process.

(i) For purposes of paragraph (d):

(1) ''COA'' is the automated complex order RFR auction process.

(2) A ''COA-eligible order'' means a complex order that, as determined by the Exchange on a class-by-class basis, is eligible for a COA considering the order's [marketability (defined as a number of ticks away from the current market),] size, complex order type (as defined in paragraphs (a) and (b) above) and complex order origin types (as defined in subparagraph (c)(i) above). Complex orders processed through a COA may be executed without consideration to prices of the same complex orders that might be available on other exchanges.

(ii) Initiation of a COA:

(A) The System will send an RFR message to all Trading Permit Holders who have elected to receive RFR messages on receipt of (1) a COA-eligible order with two legs (including orders submitted for electronic processing from PAR) *that is better than the same side of the derived net market* or (2) a complex order with three or more legs that (A) meets the class[, marketability], size, and complex order type parameters of subparagraph (d)(i)(2) *and is better than the same side of the derived net market* or (B) is *marketable against the derived net market,* designated as immediate or cancel, and meets the class [, marketability,] and size parameters of subparagraph (d)(i)(2).*[,* in both cases] *Complex orders as described in subparagraph (ii)(A)(2) will initiate a COA* regardless of the order's routing

parameters or handling instructions (except for orders routed for manual handling). *Immediate or cancel orders that are not marketable against the derived net market in accordance with subparagraph (ii)(A)(2)(B) will be cancelled.* The RFR message will identify the component series, the size and side of the market of the COA-eligible order and any contingencies, if applicable.

(B) No change.

(iii)–(ix) No change.

* * * * *

The text of the proposed rule change is also available on the Exchange's Web site (*http://www.cboe.com/AboutCBOE/CBOELegalRegulatoryHome.aspx*), at the Exchange's Office of the Secretary, and at the Commission's Public Reference Room.

II. Self-Regulatory Organization's Statement of the Purpose of, and Statutory Basis for, the Proposed Rule Change

In its filing with the Commission, the Exchange included statements concerning the purpose of and basis for the proposed rule change and discussed any comments it received on the proposed rule change. The text of these statements may be examined at the places specified in Item IV below. The Exchange has prepared summaries, set forth in sections A, B, and C below, of the most significant aspects of such statements.

A. Self-Regulatory Organization's Statement of the Purpose of, and the Statutory Basis for, the Proposed Rule Change

1. Purpose

On October 2, 2015, the Exchange submitted immediately effective filing SR–CBOE–2015–081, which amended Exchange rules related to the initiation of a complex order auction (''COA'').[3] The purpose of SR–CBOE–2015–081 (as well as predecessor filing SR–CBOE–2014–017)[4] was to limit a potential source of unintended Market-Maker risk (fully described below) related to how the Exchange's Hybrid Trading System (the ''System'')[5] calculates risk parameters under Rule 8.18 when complex orders leg into the market.

Under Rule 8.18, CBOE offers Market-Makers that are obligated to provide and maintain continuous electronic quotes in an option class the Quote Risk Monitor Mechanism (''QRM''), which is functionality to help Market-Makers manage their quotes and related risk. Market-Makers with appointments in classes that trade on the System must, among other things, provide and maintain continuous electronic quotes in a specified percentage of series in each class for a specified percentage of time.[6] To comply with this requirement, each Market-Maker may use its own proprietary quotation and risk management system to determine the prices and sizes at which it quotes. In addition, each Market-Maker may use QRM.

A Market-Maker's risk in a class is not limited to the risk in a single series of that class. Rather, a Market-Maker is generally actively quoting in multiple classes, and each class may comprise hundreds or thousands of individual series. The System automatically executes orders against a Market-Maker's quotes in accordance with the Exchange's priority and allocation rules.[7] As a result, a Market-Maker has exposure and risk in all series in which it is quoting in each of its appointed classes. QRM is an optional functionality that helps Market-Makers, and TPH organizations with which a Market-Maker is associated, limit this overall exposure and risk.

Specifically, if a Market-Maker elects to use QRM, the System will cancel a Market-Maker's quotes in all series in an appointed class if certain parameters the Market-Maker establishes are triggered. Market-Makers may set the following QRM parameters (Market-Makers may set none, some or all of these parameters):

- A maximum number of contracts for that class (the ''contract limit'') and a specified rolling time period in seconds within which such contract limit is to be measured (the ''measurement interval'');
- a maximum cumulative percentage (which is the sum of the percentages of the original quoted size of each side of each series that trade) (the ''cumulative percentage limit'') that the Market-Maker is willing to trade within a specified measurement interval; or
- a maximum number of series for which either side of the quote is fully traded (the ''number of series fully traded'') within a specified measurement interval.

If the Exchange determines the Market-Maker has traded more than the contract limit or cumulative percentage limit, or has traded at least the number of series fully traded, of a class during the specified measurement interval, the System will cancel all of the Market-Maker's electronic quotes in that class (and any other cases with the same underlying security) until the Market-Maker refreshes those quotes (a ''QRM Incident''). A Market-Maker, or TPH organization with which the Market-Maker is associated, may also specify a maximum number of QRM Incidents that may occur on an Exchange-wide basis during a specified measurement interval. If the Exchange determines that a Market-Maker or TPH Organization, as applicable, has reached its QRM Incident limit during the specified measurement interval, the System will cancel all of the Market-Maker's or TPH Organization's quotes, as applicable, and the Market-Maker's orders resting in the book in all classes and prevent the Market-Maker and TPH organization from sending additional quotes or orders to the Exchange until the earlier to occur of (1) the Market-Maker or TPH organization reactivates this ability or (2) the next trading day.

The purpose of the QRM functionality is to allow Market-Makers to provide liquidity across most series in their appointed classes without being at risk of executing the full cumulative size of all their quotes before being given adequate opportunity to adjust their quotes. For example, if a Market-Maker can enter quotes with a size of 25 contracts in 100 series of class ABC, its potential exposure is 2,500 contracts in ABC. To mitigate the risk of having all 2,500 contracts in ABC execute without the opportunity to evaluate its positions, the Market-Maker may elect to use QRM. If the Market-Maker elects to use the contract limit functionality and sets the contract limit at 100 and the measurement interval at five seconds for ABC, the System will automatically cancel the Market-Maker's quotes in all series of ABC if 100 or more contracts in series of ABC execute during any five-second period.

[3] *See* Securities Exchange Act Release No. 76106 (October 8, 2015), 80 FR 62125 (October 15, 2015) (SR–CBOE–2015–081) (''Notice'').

[4] *See* Securities Exchange Act Release No. 72986 (September 4, 2014), 79 FR 53798 (September 10, 2014) (SR–CBOE–2014–017) (''Approval Order'').

[5] The System is a trading platform that allows automatic executions to occur electronically and open outcry trades to occur on the floor of the Exchange. To operate in this ''hybrid'' environment, the Exchange has a dynamic order handling system that has the capability to route orders to the trade engine for automatic execution and book entry, to Trading Permit Holder and PAR Official workstations located in the trading crowds for manual handling, and/or to other order management terminals generally located in booths on the trading floor for manual handling. Where an order is routed for processing by the Exchange order handling system depends on various parameters configured by the Exchange and the order entry firm itself.

[6] *See* Rules 8.7(d)(ii)(iv) (Market-Makers), 8.13(d) (Preferred Market-Makers), 8.15A(b)(i) (Lead Market-Makers) and 8.85(a)(i) (Designated Primary Market-Makers).

[7] *See* Rules 6.45A, 6.45B and 6.53C.

To assure that all quotations are firm for their full size, the System performs the parameter calculations after an execution against a Market-Maker's quote occurs. For example, using the same parameters in class ABC as above, if a Market-Maker has executed a total of 95 contracts in ABC within the previous three seconds, a quote in a series of ABC with a size of 25 contracts continues to be firm for all 25 contracts. An incoming order in that series could execute all 25 contracts of that quote, and, following the execution, the total size parameter would add 25 contracts to the previous total of 95 for a total of 120 contracts executed in ABC. Because the total size executed within the previous five seconds now exceeds the 100 contract limit for ABC, the System would, following the execution, immediately cancel all of the Market-Maker's quotes in series of ABC. The Market-Maker would then enter new quotes for series in ABC. Thus, QRM limits the amount by which a Market-Maker's executions in a class may exceed its contract limit to the largest size of its quote in a single series of the class (or 25 in this example).

The Exchange proposes to amend Rule 6.53C regarding complex orders to limit a potential source of unintended Market-Maker risk related to how the System calculates risk parameters under Rule 8.18 when complex orders leg into the market.[8] As discussed above, by checking the risk parameters following each execution in a series, the risk parameters allow a Market-Maker to provide liquidity across multiple series of a class without being at risk of executing the full cumulative size of all its quotes. This is not the case, however, when a complex order legs into the regular market (*i.e.* the market for individual, or simple, orders). Because the execution of each leg of a complex order is contingent on the execution of the other legs, the execution of all the legs in the regular market is processed as a single transaction, not as a series of individual transactions.

For example, if market participants enter into the System individual orders to buy 25 contracts for the Jan 30 call, Jan 35 call, Jan 40 call and Jan 45 call in class ABC, the System processes each order as it is received and calculates the Market-Makers parameters in class ABC following the execution of each 25-contract call. However, if a market participant enters into the System a complex order to buy all four of these strikes in class ABC 25 times, which complex order executes against bids and offers for the individual series (*i.e.* legs into the market), the System will calculate the Market-Maker's parameters in class ABC following the execution of all 100 contracts. If the Market-Maker had set the same parameters in class ABC as discussed above (100-contract limit with five-second measurement interval) and had executed 95 contracts in class ABC within the previous three seconds, the amount by which the next transaction might exceed 100 is limited to the largest size of its quote in a single series of the class. In that example, since the largest size of the Market-Maker's quotes in any series was 25 contracts, the Market-Maker could not have exceeded the 100-contract limit by more than 20 contracts (95 + 25 = 120). However, with respect to the complex order with four legs 25 times, the next transaction against the Market-Maker's quotes potentially could be as large as 100 contracts (depending upon whether there are other market participants at the same price), creating the potential in this example for the Market-Maker to exceed the 100-contract limit by 95 contracts (95 + 100 = 195) instead of 20 contracts.

As this example demonstrates, legging of complex orders into the regular market presents higher risk to Market-Makers than executing their quotes against individual orders entered in multiple series of a class in the regular market, because it may result in Market-Makers exceeding their risk parameters by a greater number of contracts. This risk is directly proportional to the number of legs associated with a complex order. Market-Makers have expressed concerns to the Exchange regarding this risk.

In order to alleviate this potential risk to Market-Makers, the Exchange, in SR–CBOE–2015–081, amended Rule 6.53C(d) to, among other things, provide that a COA will be initiated when a complex order with three or more legs is designated as IOC and meets the class, marketability, and size parameters of subparagraph (d)(i)(2).[9] The Exchange observed IOC orders causing the risk to Market-Makers described above and believed the previous amendment proposed in SR–CBOE–2015–081 would reduce that risk by initiating a COA in those circumstances. The Exchange is now proposing to fine tune this requirement by amending Rule 6.53C(d)(ii)(A)(2)(B) to provide that a COA will be initiated when a complex order with three or more legs that is marketable against the derived net market is designated as immediate or cancel and the order meets the class and size parameters of subparagraph (d)(i)(2).[10]

As noted above, it is the legging of complex orders into the regular market that presents the potential risk to Market-Makers. Generally, a complex order has the potential to leg into the market when the complex order is marketable against leg quotes. For example, if the derived net market of a complex order strategy is 1.00–1.20 and a complex order to buy or sell at $1.10 is entered, the complex order would not execute against the legs of the regular market because the leg markets (which make-up the derived net market) cannot satisfy the order. A complex order to buy at $1.20 or higher or to sell at $1.00 or lower (*i.e.,* an order that is marketable against the derived net market) would potentially be executable against the leg quotes. However, the current rule requires the Exchange to initiate a COA for a complex order with three or more legs that is designated IOC and meets the class, marketability, and size parameters of subparagraph (d)(i)(2), even if the complex order is not marketable against the derived net market. Complex orders that are not marketable against the derived net market do not pose the same risk to Market-Makers as complex orders that *are marketable against the derived net market* because, as noted above, it is marketable complex orders that can leg into the market and execute against individual quotes causing the risk to Market-Makers. Thus, the Exchange is proposing to amend Rule 6.53C(d)(ii)(A)(2)(B) as described above. Additionally, IOC orders that are not

[8] Rule 6.53C(c)(ii)(1) provides that complex orders in the complex order book (''COB'') may execute against individual orders or quotes in the book provided the complex order can be executed in full (or a permissible ratio) by the orders and quotes in the book. Rule 6.53C(d)(v)(1) provides that orders that are eligible for the complex order auction (''COA'') may trade with individual orders and quotes in the book provided the COA-eligible order can be executed in full (or a permissible ratio) by the orders and quotes in the book. COA is an automated request for responses (''RFR'') auction process. Upon initiation of a COA, the Exchange sends an RFR message to all Trading Permit Holders who have elected to receive RFR messages, which RFR message identifies the series, size and side of the market of the COA-eligible order and any contingencies. Eligible market participants may submit responses during a response time interval. At the conclusion of the response time interval, COA-eligible orders are allocated in accordance with Rule 6.53C(d)(v), including against individual orders and quotes in the book.

[9] *See* Rule 6.53C(d)(ii)(A)(2)(B). The Exchange has not yet implemented the changes described in SR–CBOE–2015–081 in anticipation of this proposal.

[10] This proposed change applies to Hybrid classes only, and not Hybrid 3.0 classes. The Exchange does not believe the risk discussed in this rule filing is present in Hybrid 3.0 classes because in Hybrid 3.0 classes complex orders are not legged into the regular market. *See* Rule 6.53C.10 (providing flexibility for the Exchange to determine to not allow marketable complex orders entered into COB and/or COA to automatically execute against individual quotes residing in the EBook).

marketable against the derived net market in accordance with subparagraph (ii)(A)(2)(B) will be cancelled, which allows order entry firms to use their own sophisticated technology to manage their orders helping to remove impediments to and perfect the mechanism of a free and open market.

Currently, the marketability parameter in Rule 6.53C(d)(i)(2), defined as a number of ticks away from the current market, sets the price at which a complex order will initiate a COA. To avoid confusion, the Exchange proposes to remove the marketability parameter from the definition of ''COA-eligible order,'' which will remove the Exchange's flexibility to set the price at which a complex order will initiate a COA. The Exchange does not foresee any issues with removing the flexibility to determine the price at which a COA will be initiated because the Exchange does not foresee a future need to modify the price at which auctions are initiated. If unforeseen circumstances arise where the Exchange believes it is necessary to modify the price at which auctions are initiated then the Exchange will submit a subsequent rule filing. Additionally, removing such flexibility may provide increased certainty to market participants about the price at which a complex order will initiate a COA, helping to remove impediments to and perfect the mechanism of a free and open market.

The Exchange proposes to hardcode the price at which a complex order may initiate a COA in Rule 6.53C(d)(ii)(A). For example, assuming all of the non-price specific requirements are met, a complex order with two legs under subparagraph (d)(ii)(A)(1) and a complex order with three legs under subparagraph (d)(ii)(A)(2)(A) will initiate a COA if the derived net market is 1–1.20 and the complex order is to buy at $1.01 or higher or to sell at 1.19 or lower.[11] As described above, assuming the non-price specific requirements are met, a complex order with three legs under subparagraph (d)(ii)(A)(2)(B) will initiate a COA if the derived net market is 1–1.20 and the complex order is to buy at $1.20 or higher or to sell at $1.00 or lower. Initiating a COA in these situations will relieve the risk to Market-Makers noted above, which helps promote just and equitable principles of trade by relieving risk to Market-Makers allowing them to more efficiently and effectively provide important liquidity.

In short, SR–CBOE–2015–081, among other things, identified certain orders that potentially cause the risk to Market-Makers described above (*i.e.,* complex orders with three or more legs that are designated as IOC and meet the class, marketability, and size parameters of subparagraph (d)(i)(2)). This proposal goes a step further and focuses on the above orders that are marketable against the derived net market. This is consistent with the purpose of SR–CBOE–2015–081, which was to alleviate the potential risk to Market-Makers. Additionally, this proposal helps to further balance the protection of Market-Makers with the desire of market participants entering IOC orders to have those orders cancel if not immediately executed. The Exchange also notes that the Exchange is removing its flexibility with regards to the marketability parameter.

The Exchange will announce the implementation date of the proposed rule change in a Regulatory Circular to be published no later than 90 days following the effective date of this filing. The implementation date will be no later than 180 days following the effective date of this filing.

2. Statutory Basis

The Exchange believes the proposed rule change is consistent with the Securities Exchange Act of 1934 (the ''Act'') and the rules and regulations thereunder applicable to the Exchange and, in particular, the requirements of Section 6(b) of the Act.[12] Specifically, the Exchange believes the proposed rule change is consistent with the Section 6(b)(5)[13] requirements that the rules of an exchange be designed to prevent fraudulent and manipulative acts and practices, to promote just and equitable principles of trade, to foster cooperation and coordination with persons engaged in regulating, clearing, settling, processing information with respect to, and facilitating transactions in securities, to remove impediments to and perfect the mechanism of a free and open market and a national market system, and, in general, to protect investors and the public interest. Additionally, the Exchange believes the proposed rule change is consistent with the Section 6(b)(5)[14] requirement that the rules of an exchange not be designed to permit unfair discrimination between customers, issuers, brokers, or dealers.

In particular, the Exchange believes the proposed rule change is consistent with the purpose of SR–CBOE–2015–081, which was to alleviate a potential risk to Market-Makers that arises through the use of QRM. Complex orders with three or more legs that are designated as IOC and meet the class and size parameters of subparagraph (d)(i)(2) and that are marketable against the derived net market (which the Exchange has identified as potentially causing risk to Market-Makers) will COA, which helps promote just and equitable principles of trade by relieving risk to Market-Makers allowing them to more efficiently and effectively provide important liquidity. Orders that are designated as IOC and meet the class and size parameters of subparagraph (d)(i)(2), but that are not marketable against the derived net market, will be cancelled, which allows order entry firms to use their own sophisticated technology to manage their orders helping to remove impediments to and perfect the mechanism of a free and open market. The Exchange is also removing flexibility with regards to the marketability parameter. Although the Exchange prefers flexibility, the Exchange does not foresee the need to retain flexibility with regards to the marketability parameter and hardcoding the parameter may help avoid confusion with regards to the price at which a complex order will initiate a COA, which also helps to remove impediments to and perfect the mechanism of a free and open market.

The Exchange also believes the proposed rule change to initiate a COA upon receipt of complex orders with three or more legs that are designated as IOC and meet the class and size parameters of subparagraph (d)(i)(2) and that are marketable against the derived net market is consistent with the requirement that Market-Makers' quotes be firm under Rule 602 of Regulation NMS.[15] The proposed rule change does

[11] The Exchange notes that the prices at which a complex order will initiate a COA under subparagraphs (d)(ii)(A)(1) or (d)(ii)(A)(2)(A) are consistent with the current settings for the marketability parameter. This portion of the proposal simply hardcodes existing settings.

[12] 15 U.S.C. 78f(b).

[13] 15 U.S.C. 78f(b)(5).

[14] *Id.*

[15] Rule 602(b)(2) obligates a Market-Maker to execute any order to buy or sell a subject security presented to it by another broker or dealer or any other person belonging to a category of persons with whom the Market-Maker customarily deals, at a price at least as favorable to the buyer or sell as the Market-Maker's published bid or offer in any amount up to its published quotation size. Rule 602(b)(3) provides that no Market-Maker is obligated to execute a transaction for any subject security to purchase or sell that subject security in an amount greater than its revised quotation size if, prior to the presentation of an order for the purchase or sale of a subject security, the Market-Maker communicated to the Exchange a revised quotation size. Similarly, no Market-Maker is obligated to execute a transaction for any subject security if, before the order sought to be executed is presented, the Market-Maker has communicated to the Exchange a revised bid or offer. CBOE Rule

Continued

not relieve Market-Makers of their obligation to provide ''firm'' quotes. If a complex order in a Hybrid class with three or more legs goes through COA and then legs into the market for execution upon completion of the COA, at which point the complex order would execute against a Market-Maker's quotes based on priority rules, the Market-Maker must execute its quotes against the order at its then-published bid or offer up to its published quote size, even if such execution would cause the Market-Maker to significantly exceed its risk parameters. However, prior to the end of COA (and thus prior to a complex order legging into the market), a Market-Maker may adjust its published quotes to manage its risk in a class as it deems necessary, including to prevent executions that would exceed its risk parameters. In this case, the firm quote rule does not obligate the Market-Maker to execute its quotes against the complex order at the quote price and size that was published when the order entered the System and initiated the COA. Rather, the Market-Maker's firm quote obligation applies only to its disseminated quote at the time an order is presented to the Market-Maker for execution, which presentation does not occur until the System processes the order against the leg markets after completion of the COA.[16] Thus, the proposed rule change is consistent with the firm quote rule.

B. Self-Regulatory Organization's Statement on Burden on Competition

CBOE does not believe that the proposed rule change will impose any burden on intramarket or intermarket competition that is not necessary or appropriate in furtherance of the purposes of the Act. The Exchange does not believe the proposed rule change will impose any burden on intramarket competition because all IOC orders will be treated equally by the Exchange. The proposed rule change is intended to reduce risk to Market-Makers that are quoting in the regular market. CBOE believes that the proposed rule change will promote competition by encouraging Market-Makers to increase the size of and to more aggressively price their quotes, which will increase liquidity on the Exchange. To the extent that the rule change makes CBOE a more attractive marketplace, market participants are free to become Trading Permit Holders on CBOE and other exchanges are free to amend their rules in a similar manner. Furthermore, the Exchange does not believe the proposed rule change will impose any burden on intermarket competition because the rule change does not materially affect the outcome or purpose of SR–CBOE–2015–081, which was to alleviate potential risk to Market-Makers using QRM. The Exchange also does not believe hardcoding the price at which a complex order may initiate a COA will impose a burden on competition.

C. Self-Regulatory Organization's Statement on Comments on the Proposed Rule Change Received From Members, Participants, or Others

The Exchange neither solicited nor received comments on the proposed rule change.

III. Date of Effectiveness of the Proposed Rule Change and Timing for Commission Action

Because the foregoing proposed rule change does not:

A. significantly affect the protection of investors or the public interest;

B. impose any significant burden on competition; and

C. become operative for 30 days from the date on which it was filed, or such shorter time as the Commission may designate, it has become effective pursuant to Section 19(b)(3)(A) of the Act[17] and Rule 19b–4(f)(6)[18] thereunder. At any time within 60 days of the filing of the proposed rule change, the Commission summarily may temporarily suspend such rule change if it appears to the Commission that such action is necessary or appropriate in the public interest, for the protection of investors, or otherwise in furtherance of the purposes of the Act. If the Commission takes such action, the Commission will institute proceedings to determine whether the proposed rule change should be approved or disapproved.

IV. Solicitation of Comments

Interested persons are invited to submit written data, views, and arguments concerning the foregoing, including whether the proposed rule change is consistent with the Act. Comments may be submitted by any of the following methods:

Electronic Comments

- Use the Commission's Internet comment form (*http://www.sec.gov/rules/sro.shtml*); or
- Send an email to *rule-comments@sec.gov*. Please include File Number SR–CBOE–2016–014 on the subject line.

Paper Comments

- Send paper comments in triplicate to Brent J. Fields, Secretary, Securities and Exchange Commission, 100 F Street NE., Washington, DC 20549–1090.

All submissions should refer to File Number SR–CBOE–2016–014. This file number should be included on the subject line if email is used. To help the Commission process and review your comments more efficiently, please use only one method. The Commission will post all comments on the Commission's Internet Web site (*http://www.sec.gov/rules/sro.shtml*). Copies of the submission, all subsequent amendments, all written statements with respect to the proposed rule change that are filed with the Commission, and all written communications relating to the proposed rule change between the Commission and any person, other than those that may be withheld from the public in accordance with the provisions of 5 U.S.C. 552, will be available for Web site viewing and printing in the Commission's Public Reference Room, 100 F Street NE., Washington, DC 20549 on official business days between the hours of 10:00 a.m. and 3:00 p.m. Copies of such filing also will be available for inspection and copying at the principal office of the Exchange. All comments received will be posted without change; the Commission does not edit personal identifying information from submissions. You should submit only

8.51 imposes a similar obligation (Market-Maker must sell (buy) at least the established number of contracts at the offer (bid) which is displayed when the Market-Maker receives a buy (sell) order at the trading station where the reported security is located for trading; however, no Market-Maker is obligated to execute a transaction for a listed option when, prior to the presentation of an order to sell (buy) to the Market-Maker, the Market-Maker has communicated to the Exchange a revised quote).

[16] *See Staff Legal Bulletin No. 16, Transaction in Listed Options Under Exchange Act Rule 11Ac1–1,* U.S. Securities and Exchange Commission, Division of Market Regulation, January 20, 2004 (''Scenario 3: When an Order is ''Presented'' . . . If an individual market maker generates its own quotations . . . and exchange systems route incoming orders to the responsible broker-dealer with priority, when is an order presented to a responsible broker-dealer? **Response:** . . . . When each market maker is the responsible broker-dealer with respect to its own quote, an order is presented to it when received by the market maker from the exchange system.''). When a complex order is processing through COA, the order is still in the System and has not yet been presented to a broker or dealer (including a Market-Maker) for execution. Only after completion of the COA, when the System allocates the complex order for execution in accordance with priority rules, will that order be ''presented'' to the Market-Maker for firm quote purposes.

[17] 15 U.S.C. 78s(b)(3)(A).

[18] 17 CFR 240.19b–4(f)(6). In addition, Rule 19b–4(f)(6)(iii) requires a self-regulatory organization to give the Commission written notice of its intent to file the proposed rule change, along with a brief description and text of the proposed rule change, at least five business days prior to the date of filing of the proposed rule change, or such shorter time as designated by the Commission. The Exchange has satisfied this requirement.

information that you wish to make available publicly. All submissions should refer to File Number SR–CBOE–2016–014, and should be submitted on or before March 31, 2016.

For the Commission, by the Division of Trading and Markets, pursuant to delegated authority.[19]

Brent J. Fields,

Secretary.

[FR Doc. 2016–05326 Filed 3–9–16; 8:45 am]

BILLING CODE 8011–01–P

SECURITIES AND EXCHANGE COMMISSION

[Release No. 34–77295; File No. SR–Phlx–2016–32]

Self-Regulatory Organizations; NASDAQ PHLX LLC; Notice of Filing and Immediate Effectiveness of Proposed Rule Change To Amend Provisions Related to Options Disputes

March 4, 2016.

Pursuant to section 19(b)(1) of the Securities Exchange Act of 1934 (''Act''),[1] and Rule 19b–4 thereunder,[2] notice is hereby given that on February 25, 2016, NASDAQ PHLX LLC (''Exchange'') filed with the Securities and Exchange Commission (''SEC'' or ''Commission'') the proposed rule change as described in Items I, II, and III, below, which Items have been prepared by the Exchange. The Commission is publishing this notice to solicit comments on the proposed rule change from interested persons.

I. Self-Regulatory Organization's Statement of the Terms of the Substance of the Proposed Rule Change

The Exchange proposes to amend Rule 124, Disputes-Options and the corollary Options Floor Procedure Advice F–27, Options Exchange Official Rulings,[3] in a number of ways described below.

The text of the proposed rule change is available on the Exchange's Web site at *http://nasdaqomxphlx.cchwallstreet.com/,* at the principal office of the Exchange, and at the Commission's Public Reference Room.

II. Self-Regulatory Organization's Statement of the Purpose of, and Statutory Basis for, the Proposed Rule Change

In its filing with the Commission, the Exchange included statements concerning the purpose of and basis for the proposed rule change and discussed any comments it received on the proposed rule change. The text of these statements may be examined at the places specified in Item IV below. The Exchange has prepared summaries, set forth in sections A, B, and C below, of the most significant aspects of such statements.

A. Self-Regulatory Organization's Statement of the Purpose of, and Statutory Basis for, the Proposed Rule Change

1. Purpose

The purpose of the proposal is to update the rules under which disputes can be addressed, as described below. Rule 124 pertains to disputes on the options trading floor. Disputes occurring on and relating to the trading floor, if not settled by agreement between the members interested, shall be settled, if practicable, by vote of the members knowing of the transaction in question; if not so settled, they shall be settled by an Options Exchange Official.

In issuing decisions for the resolution of trading disputes, an Options Exchange Official shall institute the course of action deemed to be most fair to all parties under the circumstances at the time. An Options Exchange Official may direct the execution of an order on the floor, or adjust the transaction terms or participants to an executed order on the floor. An Options Exchange Official may nullify a transaction if the Options Exchange Official determines the transaction to have been in violation of certain rules that are listed in Rule 124.

The Exchange proposes to delete from this list the rules that are now entirely automated such that they do not operate on the trading floor and would not be subject to the provisions of Rule 124. Specifically, Rule 1017, Openings in Options, and Rule 1080, Phlx XL and Phlx XL II,[4] are proposed to be deleted from Rule 124. Both of these rules pertain only to automated activity. Because errors resulting from automated order handling and execution are handled pursuant to Rule 1092, there is no need for the Rule 124 process to apply.

2. Statutory Basis

The Exchange believes that its proposal is consistent with section 6(b) of the Act[5] in general, and furthers the objectives of section 6(b)(5) of the Act[6] in particular, in that it is designed to promote just and equitable principles of trade and to protect investors and the public interest, by maintaining a framework to handle disputes on the trading floor, consistent with the current market structure for trading options on the Exchange. The proposed change to delete two rules from the list of rules that, if violated, could result in a trade nullification should promote just and equitable principles of trade by recognizing that due to increased automation those disputes are handled by a different rule, Rule 1092.

B. Self-Regulatory Organization's Statement on Burden on Competition

The Exchange does not believe that the proposed rule change will impose any burden on competition not necessary or appropriate in furtherance of the purposes of the Act. In terms of intra-market competition, the proposal applies to all trading floor participants and does not affect competition among such participants. The proposal does not burden competition among options markets, which is fierce, because it merely updates an internal dispute process on the Phlx options trading floor.

C. Self-Regulatory Organization's Statement on Comments on the Proposed Rule Change Received From Members, Participants, or Others

No written comments were either solicited or received.

III. Date of Effectiveness of the Proposed Rule Change and Timing for Commission Action

Because the foregoing proposed rule change does not: (i) Significantly affect the protection of investors or the public interest; (ii) impose any significant burden on competition; and (iii) become operative for 30 days from the date on which it was filed, or such shorter time as the Commission may designate, it has become effective pursuant to section 19(b)(3)(A)(iii) of the Act[7] and subparagraph (f)(6) of Rule 19b–4 thereunder.[8]

[19] 17 CFR 200.30–3(a)(12).

[1] 15 U.S.C. 78s(b)(1).

[2] 17 CFR 240.19b–4.

[3] Options floor procedures advices generally correspond to Exchange rules and comprise the Exchange's minor rule violation plan establishing preset fines for certain violations pursuant to Rule 19d–1(c) under the Act. 17 CFR 240.19d–1(c).

[4] The Exchange intends to separately update Rule 1080 in a variety of ways to make clear that it only applies to automated trading system activity.

[5] 15 U.S.C. 78f(b).

[6] 15 U.S.C. 78f(b)(5).

[7] 15 U.S.C. 78s(b)(3)(a)(iii).

[8] 17 CFR 240.19b–4(f)(6). In addition, Rule 19b–4(f)(6) requires a self-regulatory organization to give the Commission written notice of its intent to file the proposed rule change at least five business days prior to the date of filing of the proposed rule

Continued

At any time within 60 days of the filing of the proposed rule change, the Commission summarily may temporarily suspend such rule change if it appears to the Commission that such action is: (i) Necessary or appropriate in the public interest; (ii) for the protection of investors; or (iii) otherwise in furtherance of the purposes of the Act. If the Commission takes such action, the Commission shall institute proceedings to determine whether the proposed rule should be approved or disapproved.

IV. Solicitation of Comments

Interested persons are invited to submit written data, views, and arguments concerning the foregoing, including whether the proposed rule change is consistent with the Act. Comments may be submitted by any of the following methods:

Electronic Comments

- Use the Commission's Internet comment form (*http://www.sec.gov/rules/sro.shtml*); or
- Send an email to *rule-comments@sec.gov.* Please include File Number SR–Phlx–2016–32 on the subject line.

Paper Comments

- Send paper comments in triplicate to Secretary, Securities and Exchange Commission, 100 F Street NE., Washington, DC 20549–1090.

All submissions should refer to File Number SR–Phlx–2016–32. This file number should be included on the subject line if email is used. To help the Commission process and review your comments more efficiently, please use only one method. The Commission will post all comments on the Commission's Internet Web site (*http://www.sec.gov/rules/sro.shtml*). Copies of the submission, all subsequent amendments, all written statements with respect to the proposed rule change that are filed with the Commission, and all written communications relating to the proposed rule change between the Commission and any person, other than those that may be withheld from the public in accordance with the provisions of 5 U.S.C. 552, will be available for Web site viewing and printing in the Commission's Public Reference Room, 100 F Street NE., Washington, DC 20549 on official business days between the hours of 10:00 a.m. and 3:00 p.m. Copies of such filing also will be available for inspection and copying at the principal office of the Exchange. All comments received will be posted without change; the Commission does not edit personal identifying information from submissions. You should submit only information that you wish to make available publicly. All submissions should refer to File Number SR–Phlx–2016–32, and should be submitted on or before March 31, 2016.

For the Commission, by the Division of Trading and Markets, pursuant to delegated authority.[9]

Brent J. Fields,

Secretary.

[FR Doc. 2016–05325 Filed 3–9–16; 8:45 am]

BILLING CODE 8011–01–P

change, or such shorter time as designated by the Commission. The Exchange has satisfied this requirement.

[9] 17 CFR 200.30–3(a)(12).

SECURITIES AND EXCHANGE COMMISSION

[Release No. 34–77292; File No. SR–ISEMercury–2016–02]

Self-Regulatory Organizations; ISE Mercury, LLC; Notice of Filing and Immediate Effectiveness of Proposed Rule Change To Establish the Schedule of Fees

March 4, 2016.

Pursuant to Section 19(b)(1) of the Securities Exchange Act of 1934 (the ''Act'' or ''Exchange Act''),[1] and Rule 19b–4 thereunder,[2] notice is hereby given that on February 18, 2016, ISE Mercury, LLC (the ''Exchange'' or ''ISE Mercury'') filed with the Securities and Exchange Commission (''Commission'') the proposed rule change, as described in Items I, II, and III below, which Items have been prepared by the self-regulatory organization. The Commission is publishing this notice to solicit comments on the proposed rule change from interested persons.

I. Self-Regulatory Organization's Statement of the Terms of Substance of the Proposed Rule Change

ISE Mercury proposes to establish a Schedule of Fees by adopting fees and rebates for all Regular Orders in standard options traded on ISE Mercury, and adopting route-out fees and marketing fees. The text of the proposed rule change is available on the Exchange's Internet Web site at *http://www.ise.com,* at the principal office of the Exchange, and at the Commission's Public Reference Room.

[1] 15 U.S.C. 78s(b)(1).

[2] 17 CFR 240.19b–4.

II. Self-Regulatory Organization's Statement of the Purpose of, and Statutory Basis for, the Proposed Rule Change

In its filing with the Commission, the Exchange included statements concerning the purpose of, and basis for, the proposed rule change and discussed any comments it received on the proposed rule change. The text of these statements may be examined at the places specified in Item IV below. The self-regulatory organization has prepared summaries, set forth in Sections A, B and C below, of the most significant aspects of such statements.

A. Self-Regulatory Organization's Statement of the Purpose of, and Statutory Basis for, the Proposed Rule Change

1. Purpose

The purpose of the proposed rule filing is to establish a Schedule of Fees by adopting fees and rebates for Regular Orders[3] in standard options traded on ISE Mercury, and adopting route-out fees and marketing fees.

Regular Order Fees and Rebates

The Exchange proposes to assess per contract transaction fees and rebates in all option classes traded on the Exchange to market participants that trade on the Exchange. The fees and rebates depend on the category of market participant submitting orders to the Exchange and the type of orders submitted to the Exchange.

The proposed Schedule of Fees identifies the following categories of market participants: (1) Market Maker;[4] (2) Non-ISE Mercury Market Maker;[5] (3) Firm Proprietary[6]/Broker-Dealer;[7] (4) Professional Customer;[8] (5) Priority

[3] A Regular Order is an order that consists of only a single option series and is not submitted with a stock leg.

[4] The term Market Makers refers to ''Competitive Market Makers'' and ''Primary Market Makers'' collectively. Market Maker orders sent to the Exchange by an Electronic Access Member are assessed fees at the same level as Market Maker orders.

[5] A Non-ISE Mercury Market Maker, or Far Away Market Maker (''FARMM''), is a market maker as defined in Section 3(a)(38) of the Securities Exchange Act of 1934, as amended (''Exchange Act''), registered in the same options class on another options exchange.

[6] A Firm Proprietary order is an order submitted by a member for its own proprietary account.

[7] A Broker-Dealer order is an order submitted by a member for a non-member broker-dealer account.

[8] A Professional Customer is a person who is not a broker/dealer and is not a Priority Customer.

Customer;[9] and (6) Retail.[10] The fees and rebates to be assessed for Regular Orders in standard options that are in the Penny Pilot[11] are: (1) $0.20 fee per contract for Market Maker orders,[12] (2) $0.47 fee per contract for Non-ISE Mercury Market Maker, Firm Proprietary/Broker-Dealer, and Professional Customer orders; and (3) ($0.18) rebate per contract for Priority Customer orders. The transaction fees and rebates to be assessed for Regular Orders in standard options that are not in the Penny Pilot are: (1) $0.20 fee per contract for Market Maker orders; (2) $0.90 fee per contract for Non-ISE Mercury Market Maker, Firm Proprietary/Broker-Dealer, and Professional Customer orders; and (3) ($0.18) rebate per contract for Priority Customer orders.

The fees and rebates noted above also apply to orders that are exposed at the National Best Bid or Offer (NBBO) by the Exchange (''Flash Order'').[13] When ISE Mercury is not at the NBBO, certain orders are exposed to members to give them an opportunity to match the NBBO before those orders are sent for execution pursuant to intermarket linkage rules. For all Flash Orders, the Exchange will charge the applicable fee.

The Exchange proposes to adopt a fee of $0.20 per contract for Crossing Orders[14] in all symbols traded on the Exchange for all market participants, except Priority Customers who will be charged $0.00 per contract for Crossing Orders. A Crossing Order is an order executed in the Exchange's Facilitation Mechanism, Solicited Order Mechanism, Price Improvement Mechanism (''PIM''), or submitted as a Qualified Contingent Cross order. Orders executed in the Block Order Mechanism are also considered Crossing Orders. As an exception to the fees for Crossing Orders, the Exchange proposes to adopt a fee of $0.05 per contract for PIM orders of 500 or fewer contracts in all symbols traded on the Exchange for all market participants, except that Priority Customer orders on the originating side of a PIM auction will receive a rebate of ($0.13) per contract. Priority Customer orders on the contra-side of a PIM auction will pay no fee and receive no rebate. PIM orders greater than 500 contracts will pay the Fee for Crossing Orders, described above.

The Exchange believes the proposed Fees for Crossing Orders are competitive with fees charged by other options exchanges that have functionality for crossing orders. For example, International Securities Exchange, LLC's (''ISE'')[15] and ISE Gemini, LLC's (''ISE Gemini'')[16] Fees for Crossing Orders in all symbols are almost identical to those charged by ISE Mercury in all symbols. Additionally, ISE Mercury's Fees for PIM Orders of 500 or Fewer Contracts are similar to ISE's Fee for PIM Orders of 100 or Fewer Contracts,[17] except that Priority Customers on ISE Mercury receive a rebate rather than not being charged. Rebates for orders of 500 contracts or fewer are designed to increase Priority Customer order flow to the Exchange.

The Exchange also proposes to adopt Fees for Responses to Crossing Orders. A Response to a Crossing Order is any contra-side interest (*i.e.,* orders and quotes) submitted after the commencement of an auction in the Exchange's Facilitation Mechanism, Solicited Order Mechanism, Block Order Mechanism, or PIM. The Exchange proposes to adopt a fee of (1) $0.20 per contract for Market Maker orders and (2) $0.50 per contract for Non-ISE Mercury Market Maker, Firm Proprietary/Broker-Dealer, Professional Customer, and Priority Customer orders.

The Exchange also believes the proposed fees for Responses to Crossing Orders are competitive with fees charged by other options exchanges that have functionality for crossing orders. ISE Mercury's Fees for Responses to Crossing Orders in all symbols are in line with those on ISE,[18] except that ISE Mercury offers a reduced fee to Market Makers because they have requirements and obligations to the Exchange that the other market participants do not (such as quoting requirements). Market Makers are also charged Marketing Fees, discussed below, which are not assessed to other market participants. The Exchange therefore believes it is appropriate to charge these fees for Responses to Crossing Orders.

Route-Out Fees

The Exchange proposes to adopt a Route-Out Fee of $0.55 per contract for executions of all market participant orders for standard options in symbols that are in the Penny Pilot that are routed to one or more exchanges in connection with the Options Order Protection and Locked/Crossed Market Plan. The Exchange further proposes to adopt a Route-Out Fee of $0.96 per contract for executions of all market participant orders for standard options in symbols that are not in the Penny Pilot that are routed to one or more exchanges in connection with the Options Order Protection and Locked/Crossed Market Plan. No additional transaction fees are added to the Route-Out Fees, unlike other exchanges, which, in addition to a fixed route-out fee, assess the actual transaction fees charged by the exchange the order is routed to.[19]

The Route-Out Fees offset costs incurred by the Exchange in connection with using unaffiliated broker-dealers to access other exchanges for linkage executions and are therefore appropriate because market participants that are submitting these orders can route them directly to away exchanges, if desired, and should not be able to forgo an away market fee by directing their orders to the Exchange. The Exchange therefore believes it is appropriate to charge these orders the proposed fee in order to

[9] A Priority Customer is a person or entity that is not a broker/dealer in securities, and does not place more than 390 orders in listed options per day on average during a calendar month for its own beneficial account(s).

[10] A Retail order is a Priority Customer order that originates from a natural person, provided that no change is made to the terms of the order with respect to price or side of market and the order does not originate from a trading algorithm or any other computerized methodology. On ISE Mercury, Retail orders will be charged the same fee and receive the same rebate as Priority Customer orders.

[11] Under the Penny Pilot, the minimum price variation for all participating options classes, except for the Nasdaq-100 Index Tracking Stock (''QQQ''), the SPDR S&P 500 Exchange Traded Fund (''SPY'') and the iShares Russell 2000 Index Fund (''IWM''), is $0.01 for all quotations in options series that are quoted at less than $3 per contract and $0.05 for all quotations in options series that are quoted at $3 per contract or greater. The proposed fees and rebates for Penny Pilot symbols apply to all classes in the Penny Pilot, *i.e.,* to series that are quoted at less than $3 that have a minimum price variation of $0.01 and to series that are quoted at $3 or more that have an minimum price variation of $0.05. QQQ, SPY, and IWM are quoted in $0.01 increments for all options series.

[12] This fee applies to ISE Mercury Market Maker orders sent to the Exchange by Electronic Access Members.

[13] *See* ISE Mercury Rule 1901, Supplementary Material .02.

[14] These fees apply to both originating and contra orders.

[15] *See* ISE Fee Schedule, I. Regular Order Fees and Rebates, Fee for Crossing Orders at *http://www.ise.com/assets/documents/OptionsExchange/legal/fee/ISE_fee_schedule.pdf.*

[16] *See* ISE Gemini Fee Schedule, I. Regular Order Fees and Rebates, Fee for Crossing Orders at *http://www.ise.com/assets/gemini/documents/OptionsExchange/legal/fee/Gemini_Fee_Schedule.pdf.*

[17] *See* ISE Fee Schedule, I. Regular Order Fees and Rebates, Fee for PIM Orders of 100 or Fewer Contracts at *http://www.ise.com/assets/documents/OptionsExchange/legal/fee/ISE_fee_schedule.pdf.*

[18] *See id.* at I. Regular Order Fees and Rebates, Fee for Responses to Crossing Orders.

[19] *See* MIAX Fee Schedule, (1) Transaction Fees, (c) Fees and Rebates for Customer Orders Routed to Another Options Exchange at *https://www.miaxoptions.com/sites/default/files/MIAX_Options_Fee_Schedule_02012016B.pdf* and PHLX Fee Schedule, V. Routing Fees, at *http://www.nasdaqtrader.com/Micro.aspx?id=phlxpricing.*

recoup costs associated with routing out these orders.

Marketing Fees

The Exchange proposes Marketing Fees that help its Market Makers establish marketing fee arrangements with Electronic Access Members (''EAM'') in exchange for EAMs routing some or all of their order flow to those Market Makers. This program is funded through a fee paid by Exchange Market Makers for each Priority Customer contract they execute against in the symbols that are subject to their respective Marketing Fees.[20] In particular, ISE Mercury proposes to charge Market Makers $0.25 per contract for options classes that are in the Penny Pilot and $0.70 per contract for options classes not in the Penny Pilot when trading against a Priority Customer order.[21] These fees are the same as those charged by NASDAQ OMX PHLX (''PHLX''),[22] which calls these fees Payment for Order Flow Fees. The Exchange believes these fees are appropriate.

FINRA Web CRD Fees

The Exchange proposes to adopt regulatory fees related to Web CRD, which are collected by the Financial Industry Regulatory Authority (''FINRA'') (''FINRA Web CRD Fees'').[23] The proposed fees are collected and retained by FINRA via Web CRD for the registration of employees of ISE Mercury members that are not FINRA members (''Non-FINRA members''). The Exchange is merely listing these fees on its Schedule of Fees. The Exchange does not collect or retain these fees.

The FINRA Web CRD Fees listed on the ISE Mercury Schedule of Fees consists of General Registration Fees of $100 (for each initial Form U4 filed for the registration of a representative or principal), $110 (for the additional processing of each initial or amended Form U4, Form U5 or Form BD that includes the initial reporting, amendment or certification of one of more disclosure events or proceedings), and $45 (annual system processing fee assessed only during renewals). The FINRA Web CRD Fees also consist of Fingerprint Processing Fees for the initial, second and third submissions. There is a separate fee for electronic submissions and paper submissions. The initial electronic and paper submission fees are $27.75 and $42.75, respectively. The second electronic and paper submission fees are $15.00 and $30.00, respectively. The third electronic and paper submission fees are $27.75 and $42.75, respectively. Finally, there is a $30 processing fee for fingerprint results submitted by self-regulatory organizations other than FINRA. The FINRA Web CRD Fees are user-based and there is no distinction in the cost incurred by FINRA if the user is a FINRA member or a Non-FINRA member. Accordingly, the proposed fees mirror those currently assessed by FINRA.[24]

2. Statutory Basis

The Exchange believes that the proposed rule change is consistent with the provisions of Section 6 of the Act,[25] in general, and Section 6(b)(4) of the Act,[26] in particular, in that it is designed to provide for the equitable allocation of reasonable dues, fees, and other charges among its members and other persons using its facilities.

The Exchange believes the fees proposed for transactions on ISE Mercury are reasonable. ISE Mercury will operate within a highly competitive market in which market participants can readily send order flow to any of the thirteen other competing venues if they deem fees at a particular venue to be excessive. The proposed fee structure is intended to attract order flow to ISE Mercury by offering certain market participants incentives to submit their orders to ISE Mercury.

Regular Order Fees and Rebates

The Exchange believes that its proposal to assess a per contract fee or rebate for Market Maker, Non-ISE Mercury Market Maker, Firm Proprietary/Broker-Dealer, Professional Customer, and Priority Customer orders is reasonable and equitable because the proposed fees are within the range of fees assessed by other exchanges employing similar pricing schemes. For example, the fees in the Penny Pilot on ISE Mercury for all market participants, except Priority Customers, are similar to the non-Priority Customer fees charged on PHLX,[27] which range from $0.22 to $0.49[28] per contract. Further, the rebate provided for Priority Customer orders on ISE Mercury is competitive with the rebates offered by MIAX Options Exchange (''MIAX'') in its Priority Customer Rebate Program. MIAX offers members a per contract rebate as high as ($0.24) in MIAX select symbols and ($0.21) in non-MIAX select symbols for Priority Customer orders when the member reaches MIAX's highest rebate tier.[29] Additionally, the fees for symbols not in the Penny Pilot for Non-ISE Mercury Market Maker, Firm Proprietary/Broker-Dealer, and Professional Customer orders are similar to those on ISE Gemini, which are $0.89 per contract.[30] The Exchange believes the proposed fees and rebates are not unfairly discriminatory because they would apply uniformly to similarly situated market participants and they are competitive with the fees charged by other exchanges.

The Exchange believes the proposed Fees for Crossing Orders are reasonable and equitably allocated because the proposed fees are also within the range of fees assessed by other exchanges. For example, ISE's[31] and ISE Gemini's[32] Fees for Crossing Orders in all symbols are almost identical to those proposed by ISE Mercury. Further, the Exchange believes the proposed Fee for Crossing Orders is not unfairly discriminatory because it would uniformly apply to all market participants, except Priority Customers, who historically have paid

[20] Marketing Fees apply to ISE Mercury Market Makers for each Regular Priority Customer contract executed. Marketing Fees are waived for Flash Order responses.

[21] These Marketing Fees will be rebated proportionately to the members that paid the fee such that on a monthly basis the marketing fee fund balance administered by a Primary Market Maker for a group of options established under Rule 802(b) does not exceed $100,000 and the marketing fee fund balance administered by a preferenced Competitive Market Maker for such a Group does not exceed $100,000. A preferenced Competitive Market Maker that elects not to administer a fund will not be charged the marketing fee. The Exchange also assesses an administrative fee of .45% on the total amount of the fund collected each month.

[22] *See* PHLX Fee Schedule, II. Multiply Listed Options Fees, Payment For Order Flow Fees at *http://www.nasdaqtrader.com/Micro.aspx?id=phlxpricing.*

[23] FINRA operates Web CRD, the central licensing and registration system for the U.S. securities industry. FINRA uses Web CRD to maintain the qualification, employment and disciplinary histories of registered associated persons of broker-dealers.

[24] *See* Securities Exchange Act Release No. 67247 (June 25, 2012), 77 FR 38866 (June 29, 2012) (SR–FINRA–2012–030) (the ''FINRA Fee Filing'').

[25] 15 U.S.C. 78f.

[26] 15 U.S.C. 78f(b)(4).

[27] *See* PHLX Fee Schedule, II. Multiply Listed Options Fees, at *http://www.nasdaqtrader.com/Micro.aspx?id=phlxpricing.*

[28] *See id.* at I. Rebates and Fees for Adding and Removing Liquidity in SPY, Part A. Simple Order.

[29] *See* MIAX Fee Schedule, (1) Transaction Fees, (a) Exchange Fees, (iii) Priority Customer Rebate program at *https://www.miaxoptions.com/sites/default/files/MIAX_Options_Fee_Schedule_01012015C.pdf.*

[30] *See* ISE Gemini Fee Schedule, I. Regular Order Fees and Rebates, Non-Penny Symbols, Taker Fee Tiers 1–4 at *http://www.ise.com/assets/gemini/documents/OptionsExchange/legal/fee/Gemini_Fee_Schedule.pdf.*

[31] *See* ISE Fee Schedule, I. Regular Order Fees and Rebates, Fee for Crossing Orders at *http://www.ise.com/assets/documents/OptionsExchange/legal/fee/ISE_fee_schedule.pdf.*

[32] *See* ISE Gemini Fee Schedule, I. Regular Order Fees and Rebates, Fee for Crossing Orders at *http://www.ise.com/assets/gemini/documents/OptionsExchange/legal/fee/Gemini_Fee_Schedule.pdf.*

lower fees than other market participants as an incentive to attract that order flow to the Exchange.

The Exchange believes the proposed Fees for PIM Orders of 500 or Fewer Contracts are reasonable and equitably allocated because the proposed fees are also within the range of fees assessed by other exchanges. ISE Mercury's Fee for PIM Orders of 500 or Fewer Contracts are the same as ISE's Fee for PIM Orders of 100 or Fewer Contracts,[33] except that Priority Customers orders on ISE Mercury receive a rebate while ISE does not charge a fee for Priority Customer orders. For example, in all symbols, ISE charges $0.05 for all non-Priority Customers orders and does not charge a fee for Priority Customer orders. While ISE Mercury's rebate is specifically targeted towards Priority Customer orders, the Exchange does not believe that this is unfairly discriminatory. Priority Customer orders on the Exchange are generally entitled to lower or no fees and the Exchange believes that attracting more liquidity from Priority Customers will benefit all market participants that trade on ISE Mercury.

The Exchange further believes it is reasonable and equitable to charge the proposed Fees for Responses to Crossing Orders because an execution resulting from a Response to a Crossing Order is akin to an execution and therefore its proposal to establish execution fees is reasonable and equitable. The Exchange believes that while the differential between the fees charged for Crossing Orders and the Fees for Responses to Crossing Orders is significant, the differential on ISE Mercury is similar to the differential that currently exists on other exchanges that offer a similar functionality. For example, as noted above, ISE's Fees for Crossing Orders, which are $0.20 per contract in all symbols for all market participants, except Market Makers in non-select symbols,[34] are identical to those proposed by ISE Mercury.[35] And, ISE's fees for Responses to Crossing Orders, which are $0.47 per contract for all market participants in all symbols, [36] are in line with those on ISE Mercury, except that ISE Mercury charges a lower fee to Market Makers. ISE Mercury charges a lower fee to Market Maker orders because Market Makers have requirements and obligations to the Exchange that the other market participants do not (such as quoting requirements). Market Makers are also charged Marketing Fees, which are not assessed to other market participants. Therefore, the Exchange believes the proposed fees are reasonable and equitably allocated because they are within the range of fees assessed by other exchanges employing similar pricing schemes.

The Exchange is not introducing a novel pricing scheme for Crossing Orders or for Responses to Crossing Orders. This functionality is currently available on a number of exchanges, all of which have pricing differentials that promote internalizing customer orders. The Exchange believes these are not unfairly discriminatory because they would uniformly apply to all similarly situated market participants.

The Exchange further believes charging lower fees and providing higher rebates to Priority Customer orders attracts that order flow to the Exchange and thereby creates liquidity to the benefit of all market participants who trade on the Exchange. Further, the Exchange believes that it is equitable and not unfairly discriminatory to assess lower fees to Priority Customer orders. A Priority Customer is by definition not a broker or dealer in securities, and does not place more than 390 orders in listed options per day on average during a calendar month for its own beneficial account(s). This limitation does not apply to participants on the Exchange whose behavior is substantially similar to that of market professionals, including Professional Customers, Non-ISE Mercury Market Makers, and Firm Proprietary/Broker-Dealers, who will generally submit a higher number of orders (many of which do not result in executions) than Priority Customers. Further, Professional Customers engage in trading activity similar to that conducted by Market Makers and proprietary traders. Finally, the Exchange believes that the proposed rebates are competitive with rebates provided by other exchanges, as discussed above, and are therefore reasonable and equitable.

Finally, the Exchange believes that the price differentiation between the other market participants is justified. With respect to fees for Market Maker orders, as noted above, the Exchange believes that the price differentiation between the other market participants is appropriate and not unfairly discriminatory because Market Makers have requirements and obligations to the Exchange that the other market participants do not (such as quoting requirements). Market makers also incur Marketing Fees, which the other market participants do not. The Exchange believes that it is equitable and not unfairly discriminatory to assess a higher fee to certain market participants that do not have such requirements and obligations that Exchange Market Makers do. The Exchange believes that the proposed fees are fair, equitable, and not unfairly discriminatory because the proposed fees are consistent with price differentiation that exists today at other options exchanges.[37]

Route-Out Fees

The Exchange believes the proposed route-out fees are reasonable and equitable as they provide the Exchange the ability to recover costs associated with using unaffiliated broker-dealers to route orders to other exchanges for linkage executions. The Exchange also believes that the proposed fees are not unfairly discriminatory because these fees would be uniformly applied to all market participant orders. As fees to access liquidity for orders have risen at other exchanges, it has become necessary for the Exchange to adopt routing fees in order to recoup the costs associated with routing linkage orders. The Exchange notes that a number of other exchanges currently charge a variety of routing related fees associated with customer and non-customer orders that are subject to linkage handling. The Exchange also notes that the fees proposed herein are within the range of fees charged by other Exchanges.[38]

Marketing Fees

The Exchange believes the proposed Marketing Fees are reasonable and equitable because the proposed fees will allow the Exchange and its Market Makers to better compete for order flow since the Exchange will now collect the same amount of fees as PHLX in options classes that are subject to its Payment for Order Flow Fees.[39] The Exchange

[33] *See* ISE Fee Schedule, I. Regular Order Fees and Rebates, Fee for PIM Orders of 100 or Fewer Contracts at *http://www.ise.com/assets/documents/OptionsExchange/legal/fee/ISE_fee_schedule.pdf.*

[34] These Market Maker fees are subject to tier discounts on ISE. *See* ISE Fee Schedule, IV. Other Options Fees and Rebates, C. ISE Market Maker Discount Tiers at *http://www.ise.com/assets/documents/OptionsExchange/legal/fee/ISE_fee_schedule.pdf.*

[35] *See id.* at I. Regular Order Fees and Rebates, Fee for Crossing Orders.

[36] *Id.* at I. Regular Order Fees and Rebates, Fee for Responses to Crossing Orders.

[37] *See* PHLX Fee Schedule, II. Multiply Listed Options Fees at *http://www.nasdaqtrader.com/Micro.aspx?id=phlxpricing.*

[38] *See* ISE Fee Schedule, IV. Other Options Fees and Rebates, F. Route-Out Fees at *http://www.ise.com/assets/documents/OptionsExchange/legal/fee/ISE_fee_schedule.pdf* and ISE Gemini Fee Schedule, II. Other Options Fees and Rebates, A. Route-Out Fees at *http://www.ise.com/assets/gemini/documents/OptionsExchange/legal/fee/Gemini_Fee_Schedule.pdf.*

[39] *See* PHLX Fee Schedule, II. Multiply Listed Options Fees, Payment for Order Flow Fees at

Continued

believes that with these proposed fees, Market Makers will have greater incentive to trade on ISE Mercury in the symbols that are subject to Marketing Fees and thus enhance competition.

FINRA Web CRD Fees

The Exchange believes that its proposal to adopt the FINRA Web CRD Fees is reasonable because the proposed fees are identical to those adopted by FINRA for use of Web CRD for disclosure and the registration of FINRA members and their associated persons. In the FINRA Fee Filing, FINRA noted that it believed that its fees are reasonable based on the increased costs associated with operating and maintaining Web CRD, and listed a number of enhancements made to Web CRD in support of its fee change. These costs are borne by FINRA when a Non-FINRA member uses Web CRD. FINRA further noted its belief that the fees are reasonable because they help to ensure the integrity of the information in Web CRD, which is very important because the Commission, FINRA, other self-regulatory organizations and state securities regulators use Web CRD to make licensing and registration decisions, among other things. The Exchange notes that the proposed rule change is reasonable because the amount of the fees are those provided by FINRA, and the Exchange does not collect or retain these fees. The proposed rule change is also equitable and not unfairly discriminatory because the Exchange will not be collecting or retaining these fees, therefore will not be in a position to apply them in an inequitable or unfairly discriminatory manner.

The Exchange notes that all of the proposed fees and rebates, discussed above, are intended to establish ISE Mercury as an attractive venue for market participants to direct their order flow as the proposed fees and rebates are competitive with those established by other exchanges for similar trading activities. The Exchange will be operating in a highly competitive market in which market participants can readily direct order flow to another exchange if they deem fees at a particular exchange to be too high, or in the case of rebates, not high enough. For the reasons noted above, the Exchange believes that the proposed fees are fair, equitable, and not unfairly discriminatory.

http://www.nasdaqtrader.com/Micro.aspx?id=phlxpricing.

B. Self-Regulatory Organization's Statement on Burden on Competition

In accordance with Section 6(b)(8) of the Act,[40] the Exchange does not believe that the proposed rule change will impose any burden on intermarket or intramarket competition that is not necessary or appropriate in furtherance of the purposes of the Act.

The Exchange notes that the difference between the Fees for Crossing Orders and the Fees for Responses to Crossing Orders are not unfairly discriminatory and do not impose an undue burden on competition. The Exchange believes the crossing mechanisms on ISE Mercury provide incentives for market participants to submit customer order flow to the Exchange and thus, creates a greater opportunity for customers to receive better executions. The crossing mechanisms on ISE Mercury provide an opportunity for market participants to compete for customer orders, and have no limitations regarding the number of and type of market participant that can participate and compete for such orders. ISE Mercury notes that its market model and fees are generally intended to attract a specific segment of the options industry and the Exchange is competing with other exchanges that currently attract that segment.

Unilateral action by ISE Mercury in establishing fees for services provided to its members and others using its facilities will not have any adverse impact on competition. As a new entrant in the already highly competitive environment for equity options trading, ISE Mercury does not have the market power necessary to set prices for services that are inequitably allocated, unreasonable or unfairly discriminatory in violation of the Act. ISE Mercury's proposed fees and rebates, as described herein, are comparable to fees charged and rebates provided by other options exchanges for the same or similar services. To the extent the proposed fees and rebates fail to attract order flow away from its competitors, ISE Mercury may have to adjust level of fees and rebates.

C. Self-Regulatory Organization's Statement on Comments on the Proposed Rule Change Received From Members, Participants, or Others

The Exchange has not solicited, and does not intend to solicit, comments on this proposed rule change. The Exchange has not received any unsolicited written comments from members or other interested parties.

[40] 15 U.S.C. 78f(b)(8).

III. Date of Effectiveness of the Proposed Rule Change and Timing for Commission Action

The foregoing rule change has become effective pursuant to Section 19(b)(3)(A)(ii) of the Act,[41] and subparagraph (f)(2) of Rule 19b–4 thereunder,[42] because it establishes a due, fee, or other charge imposed by ISE Mercury.

At any time within 60 days of the filing of such proposed rule change, the Commission summarily may temporarily suspend such rule change if it appears to the Commission that such action is necessary or appropriate in the public interest, for the protection of investors, or otherwise in furtherance of the purposes of the Act. If the Commission takes such action, the Commission shall institute proceedings to determine whether the proposed rule should be approved or disapproved.

IV. Solicitation of Comments

Interested persons are invited to submit written data, views, and arguments concerning the foregoing, including whether the proposed rule change is consistent with the Act. Comments may be submitted by any of the following methods:

Electronic Comments

- Use the Commission's Internet comment form (*http://www.sec.gov/rules/sro.shtml*); or
- Send an email to *rule-comments@sec.gov.* Please include File Number SR–ISEMercury–2016–02 on the subject line.

Paper Comments

- Send paper comments in triplicate to Brent J. Fields, Secretary, Securities and Exchange Commission, 100 F Street NE., Washington, DC 20549–1090.

All submissions should refer to File Number SR–ISEMercury–2016–02. This file number should be included on the subject line if email is used. To help the Commission process and review your comments more efficiently, please use only one method. The Commission will post all comments on the Commission's Internet Web site (*http://www.sec.gov/rules/sro.shtml*). Copies of the submission, all subsequent amendments, all written statements with respect to the proposed rule change that are filed with the Commission, and all written communications relating to the proposed rule change between the Commission and any person, other than those that may be withheld from the

[41] 15 U.S.C. 78s(b)(3)(A)(ii).

[42] 17 CFR 240.19b–4(f)(2).

public in accordance with the provisions of 5 U.S.C. 552, will be available for Web site viewing and printing in the Commission's Public Reference Room, 100 F Street NE., Washington, DC 20549 on official business days between the hours of 10:00 a.m. and 3:00 p.m. Copies of such filing also will be available for inspection and copying at the principal office of the Exchange. All comments received will be posted without change; the Commission does not edit personal identifying information from submissions. You should submit only information that you wish to make available publicly. All submissions should refer to File Number SR–ISEMercury–2016–02, and should be submitted on or before March 31, 2016.

For the Commission, by the Division of Trading and Markets, pursuant to delegated authority.[43]

Brent J. Fields,

Secretary.

[FR Doc. 2016–05322 Filed 3–9–16; 8:45 am]

BILLING CODE 8011–01–P

[43] 17 CFR 200.30–3(a)(12).

SECURITIES AND EXCHANGE COMMISSION

[Release No. 34–77294; File No. SR–NYSEArca–2016–40]

Self-Regulatory Organizations; NYSE Arca, Inc.; Notice of Filing and Immediate Effectiveness of Proposed Rule Change To Modify the NYSE Arca Options Fee Schedule Relating to ByRDs Transaction Fees

March 4, 2016.

Pursuant to section 19(b)(1) [1] of the Securities Exchange Act of 1934 (the ''Act'') [2] and Rule 19b–4 thereunder,[3] notice is hereby given that, on March 1, 2016, NYSE Arca, Inc. (the ''Exchange'' or ''NYSE Arca'') filed with the Securities and Exchange Commission (the ''Commission'') the proposed rule change as described in Items I, II, and III below, which Items have been prepared by the self-regulatory organization. The Commission is publishing this notice to solicit comments on the proposed rule change from interested persons.

I. Self-Regulatory Organization's Statement of the Terms of the Substance of the Proposed Rule Change

The Exchange proposes to modify the NYSE Arca Options Fee Schedule (''Fee Schedule'') to address how the Exchange would treat transactions in Binary Return Derivatives contracts (''ByRDs''). The Exchange proposes to implement the fee change effective March 1, 2016. The proposed rule change is available on the Exchange's Web site at *www.nyse.com,* at the principal office of the Exchange, and at the Commission's Public Reference Room.

II. Self-Regulatory Organization's Statement of the Purpose of, and Statutory Basis for, the Proposed Rule Change

In its filing with the Commission, the self-regulatory organization included statements concerning the purpose of, and basis for, the proposed rule change and discussed any comments it received on the proposed rule change. The text of those statements may be examined at the places specified in Item IV below. The Exchange has prepared summaries, set forth in sections A, B, and C below, of the most significant parts of such statements.

A. Self-Regulatory Organization's Statement of the Purpose of, and Statutory Basis for, the Proposed Rule Change

1. Purpose

The purpose of this filing is to propose revisions to the Fee Schedule to address how the Exchange would treat transactions in ByRDs.

The Exchange recently added rules related to ByRDs and plans to launch trading in ByRDs in March 2016.[4] To encourage trading in ByRDs, the Exchange proposes to exempt transactions in ByRds from all transaction fees and credits at this time., [sic] The Exchange also proposes that any volume in ByRDs would be included in the calculations to qualify for any volume-based incentives currently being offered on the Exchange. Accordingly, the Exchange proposes to add Endnote 14 to the Fee Schedule regarding the Rates for Standard Options transactions to reflect this proposed change.

The Exchange believes the proposed treatment of ByRDs for purposes of the Fee Schedule would further the Exchange's goal of introducing new products to the marketplace by encouraging trading in these products.

2. Statutory Basis

The Exchange believes that the proposed rule change is consistent with Section 6(b) of the Act,[5] in general, and furthers the objectives of sections 6(b)(4) and (5) of the Act,[6] in particular, because it provides for the equitable allocation of reasonable dues, fees, and other charges among its members, issuers and other persons using its facilities and does not unfairly discriminate between customers, issuers, brokers or dealers.

The Exchange believes the proposed change is reasonable and does not unfairly discriminate between customers, issues, brokers, or dealers, because the Exchange's treatment of ByRDs would apply equally to all market participants that opted to trade ByRDs. Further, the proposed change is reasonable and does not unfairly discriminate because exempting ByRDs from transaction fees, while still including any volume in ByRDs in the calculations to qualify for any volume-based incentives offered on the Exchange would further the Exchange's goal of introducing new products to the marketplace by encouraging trading in these products. To the extent that the proposed change incentivizes any market participants to direct their order flow to the Exchange, all market participants would benefit from increased liquidity and trading opportunities on the Exchange.

B. Self-Regulatory Organization's Statement on Burden on Competition

In accordance with section 6(b)(8) of the Act,[7] the Exchange does not believe that the proposed rule change will impose any burden on competition that is not necessary or appropriate in furtherance of the purposes of the Act. The Exchange believes that the proposed change is pro-competitive as it would further the Exchange's goal of introducing new products to the marketplace and encouraging trading in these products, which would in turn, benefit market participants. To the extent that this purpose is achieved, all of the Exchange's market participants should benefit from the improved market liquidity. Enhanced market quality and increased transaction volume that results from the anticipated increase in order flow directed to the Exchange will benefit all market

[1] 15 U.S.C. 78s(b)(1).

[2] 15 U.S.C. 78a.

[3] 17 CFR 240.19b–4.

[4] *See* Securities Exchange Act Release No. 77044 (February 3, 2016), 81 FR 6908 (February 3 [sic], 2016) (SR–Arca–2–16) (immediate effectiveness filing adopting rules relating to ByRDs). ByRDs are European-style option contracts on individual stocks, exchange-traded funds (''ETFs'') and Index-Linked Securities that have a fixed return in cash based on a set strike price; satisfy specified listing criteria; and may only be excercised at expiration pursuant to the Rules of the Options Clearing Corporation (the ''OCC'').

[5] 15 U.S.C. 78f(b).

[6] 15 U.S.C. 78f(b)(4) and (5).

[7] 15 U.S.C. 78f(b)(8).

participants and improve competition on the Exchange.

The Exchange notes that it operates in a highly competitive market in which market participants can readily favor competing venues. In such an environment, the Exchange must continually review, and consider adjusting, its fees and credits to remain competitive with other exchanges. For the reasons described above, the Exchange believes that the proposed rule change reflects this competitive environment.

C. Self-Regulatory Organization's Statement on Comments on the Proposed Rule Change Received From Members, Participants, or Others

No written comments were solicited or received with respect to the proposed rule change.

III. Date of Effectiveness of the Proposed Rule Change and Timing for Commission Action

The foregoing rule change is effective upon filing pursuant to section 19(b)(3)(A) [8] of the Act and subparagraph (f)(2) of Rule 19b–4 [9] thereunder, because it establishes a due, fee, or other charge imposed by the Exchange.

At any time within 60 days of the filing of such proposed rule change, the Commission summarily may temporarily suspend such rule change if it appears to the Commission that such action is necessary or appropriate in the public interest, for the protection of investors, or otherwise in furtherance of the purposes of the Act. If the Commission takes such action, the Commission shall institute proceedings under section 19(b)(2)(B) [10] of the Act to determine whether the proposed rule change should be approved or disapproved.

IV. Solicitation of Comments

Interested persons are invited to submit written data, views, and arguments concerning the foregoing, including whether the proposed rule change is consistent with the Act. Comments may be submitted by any of the following methods:

Electronic Comments

- Use the Commission's Internet comment form (*http://www.sec.gov/rules/sro.shtml*); or
- Send an email to *rule-comments@sec.gov.* Please include File No. SR–NYSEArca–2016–40 on the subject line.

Paper Comments

- Send paper comments in triplicate to Secretary, Securities and Exchange Commission, 100 F Street NE., Washington, DC 20549–1090.

All submissions should refer to File No. SR–NYSEArca–2016–40. This file number should be included on the subject line if email is used. To help the Commission process and review your comments more efficiently, please use only one method. The Commission will post all comments on the Commission's Internet Web site (*http://www.sec.gov/rules/sro.shtml*). Copies of the submission, all subsequent amendments, all written statements with respect to the proposed rule change that are filed with the Commission, and all written communications relating to the proposed rule change between the Commission and any person, other than those that may be withheld from the public in accordance with the provisions of 5 U.S.C. 552, will be available for Web site viewing and printing in the Commission's Public Reference Room, 100 F Street NE., Washington, DC 20549 on official business days between the hours of 10:00 a.m. and 3:00 p.m. Copies of such filing also will be available for inspection and copying at the principal office of the Exchange. All comments received will be posted without change; the Commission does not edit personal identifying information from submissions. You should submit only information that you wish to make available publicly. All submissions should refer to File No. SR–NYSEArca–2016–40, and should be submitted on or before March 31, 2016.

For the Commission, by the Division of Trading and Markets, pursuant to delegated authority.[11]

Brent J. Fields,

Secretary.

[FR Doc. 2016–05324 Filed 3–9–16; 8:45 am]

BILLING CODE 8011–01–P

[8] 15 U.S.C. 78s(b)(3)(A).

[9] 17 CFR 240.19b–4(f)(2).

[10] 15 U.S.C. 78s(b)(2)(B).

[11] 17 CFR 200.30–3(a)(12).

DEPARTMENT OF STATE

[Public Notice: 9470]

Culturally Significant Objects Imported for Exhibition Determinations: ''Agnes Martin'' Exhibition

SUMMARY: Notice is hereby given of the following determinations: Pursuant to the authority vested in me by the Act of October 19, 1965 (79 Stat. 985; 22 U.S.C. 2459), Executive Order 12047 of March 27, 1978, the Foreign Affairs Reform and Restructuring Act of 1998 (112 Stat. 2681, *et seq.;* 22 U.S.C. 6501 note, *et seq.*), Delegation of Authority No. 234 of October 1, 1999, Delegation of Authority No. 236–3 of August 28, 2000 (and, as appropriate, Delegation of Authority No. 257–1 of December 11, 2015), I hereby determine that the objects to be included in the exhibition ''Agnes Martin,'' imported from abroad for temporary exhibition within the United States, are of cultural significance. The objects are imported pursuant to loan agreements with the foreign owners or custodians. I also determine that the exhibition or display of the exhibit objects at the Los Angeles County Museum of Art, Los Angeles, California, from on or about April 24, 2016, until on or about September 11, 2016, at the Solomon R. Guggenheim Museum, New York, New York, from on or about October 7, 2016, until on or about January 11, 2017, and at possible additional exhibitions or venues yet to be determined, is in the national interest. I have ordered that Public Notice of these Determinations be published in the **Federal Register**.

FOR FURTHER INFORMATION CONTACT: For further information, including a list of the imported objects, contact the Office of Public Diplomacy and Public Affairs in the Office of the Legal Adviser, U.S. Department of State (telephone: 202–632–6471; email: *section2459@state.gov*). The mailing address is U.S. Department of State, L/PD, SA–5, Suite 5H03, Washington, DC 20522–0505.

Dated: March 3, 2016.

Mark Taplin,

Deputy Assistant Secretary for Policy, Bureau of Educational and Cultural Affairs, Department of State.

[FR Doc. 2016–05536 Filed 3–9–16; 8:45 am]

BILLING CODE 4710–05–P

DEPARTMENT OF STATE

[Public Notice: 9468]

In the Matter of the Review of the Designation of the Palestine Liberation Front (PLF) (and other aliases) as a Foreign Terrorist Organization Pursuant to Section 219 of the Immigration and Nationality Act, as Amended

Based upon a review of the Administrative Record assembled pursuant to Section 219(a)(4)(C) of the Immigration and Nationality Act, as amended (8 U.S.C. 1189(a)(4)(C)) (''INA''), and in consultation with the Attorney General and the Secretary of the Treasury, I conclude that the

circumstances that were the basis for the designation of the aforementioned organization as a Foreign Terrorist Organization have not changed in such a manner as to warrant revocation of the designation and that the national security of the United States does not warrant a revocation of the designation.

Therefore, I hereby determine that the designation of the aforementioned organization as a Foreign Terrorist Organization, pursuant to Section 219 of the INA (8 U.S.C. 1189), shall be maintained.

This determination shall be published in the **Federal Register**.

Dated: February 26, 2016.

John F. Kerry,

Secretary of State, U.S. Department of State.

[FR Doc. 2016–05398 Filed 3–9–16; 8:45 am]

BILLING CODE 4710–AD–P

DEPARTMENT OF TRANSPORTATION

Federal Aviation Administration

[Summary Notice No. PE–2016–08]

Petition for Exemption; Summary of Petition Received; Amazon.com

AGENCY: Federal Aviation Administration (FAA), DOT.

ACTION: Notice.

SUMMARY: This notice contains a summary of a petition seeking relief from specified requirements of Title 14 of the Code of Federal Regulations. The purpose of this notice is to improve the public's awareness of, and participation in, the FAA's exemption process. Neither publication of this notice nor the inclusion or omission of information in the summary is intended to affect the legal status of the petition or its final disposition.

DATES: Comments on this petition must identify the petition docket number and must be received on or before March 30, 2016.

ADDRESSES: Send comments identified by docket number FAA–2014–0474 using any of the following methods:

- *Federal eRulemaking Portal:* Go to *http://www.regulations.gov* and follow the online instructions for sending your comments electronically.
- *Mail:* Send comments to Docket Operations, M–30; U.S. Department of Transportation (DOT), 1200 New Jersey Avenue SE., Room W12–140, West Building Ground Floor, Washington, DC 20590–0001.
- *Hand Delivery or Courier:* Take comments to Docket Operations in Room W12–140 of the West Building Ground Floor at 1200 New Jersey Avenue SE., Washington, DC, between 9 a.m. and 5 p.m., Monday through Friday, except Federal holidays.
- *Fax:* Fax comments to Docket Operations at 202–493–2251.

Privacy: In accordance with 5 U.S.C. 553(c), DOT solicits comments from the public to better inform its rulemaking process. DOT posts these comments, without edit, including any personal information the commenter provides, to *http://www.regulations.gov,* as described in the system of records notice (DOT/ALL–14 FDMS), which can be reviewed at *http://www.dot.gov/privacy.*

Docket: Background documents or comments received may be read at *http://www.regulations.gov* at any time. Follow the online instructions for accessing the docket or go to the Docket Operations in Room W12–140 of the West Building Ground Floor at 1200 New Jersey Avenue SE., Washington, DC, between 9 a.m. and 5 p.m., Monday through Friday, except Federal holidays.

FOR FURTHER INFORMATION CONTACT: Dan Ngo, 202–267–4264, 800 Independence Avenue SW., Washington, DC 20591.

This notice is published pursuant to 14 CFR 11.85.

Issued in Washington, DC, on March 3, 2016.

Lirio Liu,

Director, Office of Rulemaking.

Petition For Exemption

Docket No.: FAA–2014–0474.

Petitioner: Amazon.com.

Section(s) of 14 CFR Affected: 91.119(c).

Description of Relief Sought: The petitioner requests to conduct commercial UAS operations within 500 feet of any person, vessel, vehicle, or structure in a manner consistent with 14CFR 91.119(c).

[FR Doc. 2016–05345 Filed 3–9–16; 8:45 am]

BILLING CODE 4910–13–P

DEPARTMENT OF TRANSPORTATION

Federal Aviation Administration

[Summary Notice No. PE–2016–0030]

Petition for Exemption; Summary of Petition Received; AGERpoint, Inc.

AGENCY: Federal Aviation Administration (FAA), DOT.

ACTION: Notice.

SUMMARY: This notice contains a summary of a petition seeking relief from specified requirements of Title 14 of the Code of Federal Regulations. The purpose of this notice is to improve the public's awareness of, and participation in, the FAA's exemption process. Neither publication of this notice nor the inclusion or omission of information in the summary is intended to affect the legal status of the petition or its final disposition.

DATES: Comments on this petition must identify the petition docket number and must be received on or before March 30, 2016.

ADDRESSES: Send comments identified by docket number FAA–2015–0323 using any of the following methods:

- *Federal eRulemaking Portal:* Go to *http://www.regulations.gov* and follow the online instructions for sending your comments electronically.
- *Mail:* Send comments to Docket Operations, M–30; U.S. Department of Transportation (DOT), 1200 New Jersey Avenue SE., Room W12–140, West Building Ground Floor, Washington, DC 20590–0001.
- *Hand Delivery or Courier:* Take comments to Docket Operations in Room W12–140 of the West Building Ground Floor at 1200 New Jersey Avenue SE., Washington, DC, between 9 a.m. and 5 p.m., Monday through Friday, except Federal holidays.
- *Fax:* Fax comments to Docket Operations at 202–493–2251.

Privacy: In accordance with 5 U.S.C. 553(c), DOT solicits comments from the public to better inform its rulemaking process. DOT posts these comments, without edit, including any personal information the commenter provides, to *http://www.regulations.gov,* as described in the system of records notice (DOT/ALL–14 FDMS), which can be reviewed at *http://www.dot.gov/privacy.*

Docket: Background documents or comments received may be read at *http://www.regulations.gov* at any time. Follow the online instructions for accessing the docket or go to the Docket Operations in Room W12–140 of the West Building Ground Floor at 1200 New Jersey Avenue SE., Washington, DC, between 9 a.m. and 5 p.m., Monday through Friday, except Federal holidays.

FOR FURTHER INFORMATION CONTACT: Joshua Parker (202) 267–1538, Office of Rulemaking, Federal Aviation Administration, 800 Independence Avenue SW., Washington, DC 20591.

This notice is published pursuant to 14 CFR 11.85.

Issued in Washington, DC, on March 3, 2016.

Lirio Liu,

Director, Office of Rulemaking.

Petition for Exemption

Docket No.: FAA–2015–0323

Petitioner: AGERpoint, Inc.

Section(s) of 14 CFR Affected: §§ 61.23 (a)(1); 61.101 (e)(4)(5); 61.113 (a); 61.315 (a); 91.7 (a); 91.119 (c); 91.121; 91.151 (a)(1); 91.405 (a); 91.407 (a)(1); 91.409 (a)(1)(2); 91.417 (a)(b).

Description of Relief Sought: The petitioner is requesting relief in order to operate UAS USA Tempest, UAS USA Tempest XL, Pulse Aerospace Vapor PA–01, AeroScout Scout B1–100, and Guided Systems Technologies, Inc. SICX–75 (one of which is over 55 pounds), to perform aerial data collection.

[FR Doc. 2016–05346 Filed 3–9–16; 8:45 am]

BILLING CODE 4910–13–P

DEPARTMENT OF TRANSPORTATION

Federal Aviation Administration

Third Meeting: RTCA Special Committee (235) Non-Rechargeable Lithium Batteries

AGENCY: Federal Aviation Administration (FAA), U.S. Department of Transportation (DOT).

ACTION: Notice of Third RTCA Special Committee 235 Meeting.

SUMMARY: The FAA is issuing this notice to advise the public of the Third RTCA Special Committee 235 meeting.

DATES: The meeting will be held April 26–27, 2016 from 8:30 a.m.–5:30 p.m.

ADDRESSES: The meeting will be held at Radiant Power Corporation, 7135 16th Street East, Suite 101, Sarasota, FL 34243, Tel: (202) 330–0680.

FOR FURTHER INFORMATION CONTACT: The RTCA Secretariat, 1150 18th Street NW., Suite 910, Washington, DC 20036, or by telephone at (202) 833–9339, fax at (202) 833–9434, or Web site at *http://www.rtca.org* or Karan Hofmann, Program Director, RTCA, Inc., *khofmann@rtca.org,* (202) 330–0680.

SUPPLEMENTARY INFORMATION: Pursuant to section 10(a)(2) of the Federal Advisory Committee Act (Pub. L. 92–463, 5 U.S.C., App.), notice is hereby given for a meeting of RTCA Special Committee 235. The agenda will include the following:

Tuesday, April 26, 2016 (8:30 a.m.–5:30 p.m.)

1. Welcome and Administrative Remarks
2. Introductions
3. Agenda Review
4. Meeting—Minutes Review
5. Update of PMC Approval TOR Revision
6. Status Report of Working-Group Leaders and key items to be brought to Plenary for discussion
   a. WG–1/3
   i. Template
   ii. Section 1
   iii. Section 2—Requirements
   b. WG–2
   i. Section 2—Tests and Compliance Matrix
7. Review of program schedule
8. Action Item Review
9. Any other Business
10. Date and Place of Next Meeting
11. Adjourn

Wednesday, April 27, 2016 (8:30 a.m.–4:00 p.m.)

1. Continuation of Plenary or Working Group Session

Attendance is open to the interested public but limited to space availability. With the approval of the chairman, members of the public may present oral statements at the meeting. Plenary information will be provided upon request. Persons who wish to present statements or obtain information should contact the person listed in the **FOR FURTHER INFORMATION CONTACT** section. Members of the public may present a written statement to the committee at any time.

Issued in Washington, DC, on March 3, 2016.

Latasha Robinson,

Management & Program Analyst, NextGen, Enterprise Support Services Division, Federal Aviation Administration.

[FR Doc. 2016–05311 Filed 3–9–16; 8:45 am]

BILLING CODE 4910–13–P

DEPARTMENT OF TRANSPORTATION

Federal Aviation Administration

Fourth Meeting: RTCA Special Committee (234) Portable Electronic Devices (PEDs) (Joint With EUROCAE WG–99)

AGENCY: Federal Aviation Administration (FAA), U.S. Department of Transportation (DOT).

ACTION: Notice of Fourth RTCA Special Committee 234 Meeting.

SUMMARY: The FAA is issuing this notice to advise the public of the Fourth RTCA Special Committee 234 meeting.

DATES: The meeting will be held April 13–15, 2016 from 9:00 a.m.–5:00 p.m.

ADDRESS: The meeting will be held at Lufthansa Conference Center Permanenta Building 234, FAC, 2. Floor, Hugo Echner Ring 234, 60546 Frankfurt/Main, Tel: (202) 330–0680.

FOR FURTHER INFORMATION CONTACT: The RTCA Secretariat, 1150 18th Street NW., Suite 910, Washington, DC 20036, or by telephone at (202) 833–9339, fax at (202) 833–9434, or Web site at *http://www.rtca.org* or Karan Hofmann, Program Director, RTCA, Inc., *khofmann@rtca.org,* (202) 330–0680.

SUPPLEMENTARY INFORMATION: Pursuant to section 10(a)(2) of the Federal Advisory Committee Act (Pub. L. 92–463, 5 U.S.C., App.), notice is hereby given for a meeting of RTCA Special Committee 234. The agenda will include the following:

Wednesday, April 13, 2016

1. Opening Plenary (9:00 a.m.–12:00 p.m.)
   a. Welcome and Administrative Remarks
   b. Introductions
   c. Agenda Review
   d. Meeting—Minutes Review
   e. Reports from Task-Group Leaders (TG #1–#5)
   i. TG–1—General Background, Regulations, App, etc.
   ii. TG–2—Front Door Guidance
   iii. TG–3—Back Door Guidance
   iv. TG–4—Sustaining Aircraft PED Tolerance
   v. TG–5—DO–307A/ED–239
   f. Interim Adjournment
2. Task Group Sessions (1:30 p.m.–5:00 p.m.)

Thursday, April 14, 2016

1. Continuation of Task Group Sessions (9:00 a.m.–5:00 p.m.)

Friday, April 15, 2016

1. Closing Plenary (9:00 a.m.–12:00 p.m.)
   a. Wrap Up Reports from Task-Group Leaders (TG #1–#5)
   i. TG–1—General Background, Regulations, App, etc.
   ii. TG–2—Front Door Guidance
   iii. TG–3—Back Door Guidance
   iv. TG–4—Sustaining Aircraft PED Tolerance
   v. TG–5—DO–307A/ED–239
   b. Review of program schedule
   c. Any other Business
   d. Date and Place of Next Meeting
   e. Adjourn

Attendance is open to the interested public but limited to space availability. WebEx/Audio information will be provided for attendees who would like to dial-in. With the approval of the chairman, members of the public may present oral statements at the meeting. Plenary information will be provided upon request. Persons who wish to

present statements or obtain information should contact the person listed in the **FOR FURTHER INFORMATION CONTACT** section. Members of the public may present a written statement to the committee at any time.

Issued in Washington, DC, on March 3, 2016.

Latasha Robinson,

Management & Program Analyst, NextGen, Enterprise Support Services Division, Federal Aviation Administration.

[FR Doc. 2016–05310 Filed 3–9–16; 8:45 am]

BILLING CODE 4910–13–P

DEPARTMENT OF TRANSPORTATION

Federal Aviation Administration

[Summary Notice No. PE–2016–0031]

Petition for Exemption; Summary of Petition Received; Iowa State University of Science and Technology

AGENCY: Federal Aviation Administration (FAA), DOT.

ACTION: Notice.

SUMMARY: This notice contains a summary of a petition seeking relief from specified requirements of title 14 of the Code of Federal Regulations. The purpose of this notice is to improve the public's awareness of, and participation in, the FAA's exemption process. Neither publication of this notice nor the inclusion or omission of information in the summary is intended to affect the legal status of the petition or its final disposition.

DATES: Comments on this petition must identify the petition docket number and must be received on or before March 30, 2016.

ADDRESSES: Send comments identified by docket number FAA–2015–4716 using any of the following methods:

- *Federal eRulemaking Portal:* Go to *http://www.regulations.gov* and follow the online instructions for sending your comments electronically.
- *Mail:* Send comments to Docket Operations, M–30; U.S. Department of Transportation (DOT), 1200 New Jersey Avenue SE., Room W12–140, West Building Ground Floor, Washington, DC 20590–0001.
- *Hand Delivery or Courier:* Take comments to Docket Operations in Room W12–140 of the West Building Ground Floor at 1200 New Jersey Avenue SE., Washington, DC, between 9 a.m. and 5 p.m., Monday through Friday, except Federal holidays.
- *Fax:* Fax comments to Docket Operations at 202–493–2251.

Privacy: In accordance with 5 U.S.C. 553(c), DOT solicits comments from the public to better inform its rulemaking process. DOT posts these comments, without edit, including any personal information the commenter provides, to *http://www.regulations.gov,* as described in the system of records notice (DOT/ALL–14 FDMS), which can be reviewed at *http://www.dot.gov/privacy.*

Docket: Background documents or comments received may be read at *http://www.regulations.gov* at any time. Follow the online instructions for accessing the docket or go to the Docket Operations in Room W12–140 of the West Building Ground Floor at 1200 New Jersey Avenue SE., Washington, DC, between 9 a.m. and 5 p.m., Monday through Friday, except Federal holidays.

FOR FURTHER INFORMATION CONTACT: Dan Ngo (202) 267–4264, Office of Rulemaking, Federal Aviation Administration, 800 Independence Avenue SW., Washington, DC 20591.

This notice is published pursuant to 14 CFR 11.85.

Issued in Washington, DC, on March 3, 2016.

Lirio Liu,

Director, Office of Rulemaking.

Petition for Exemption

Docket No.: FAA–2015–4716

Petitioner: Iowa State University of Science and Technology

Section(s) of 14 CFR Affected: §§ 45.23(b); 45.27(a); 61.23(a) and (c); 61.113; 61.101(e)(4) and (5); 61.315; 91.7(a); 91.9(b)(2); 91.9(c); 91.103; 91.109(a); 91.119(b); 91.121; 91.151(a); 91.203 (a) & (b); 91.405(a); 91.407(a)(1); 91.409(a)(1) & (2); 91.417 (a) & (b).

Description of Relief Sought: The petitioner is requesting relief in order to operate SenseFly eBee, DJI Spreading Wings, and AirCover QR425 aircrafts to perform aerial data collection, training, and research including control of multiple air vehicles in closely coupled collaborative flights and pest management.

[FR Doc. 2016–05342 Filed 3–9–16; 8:45 am]

BILLING CODE 4910–13–P

DEPARTMENT OF TRANSPORTATION

Federal Aviation Administration

[Summary Notice No. PE–2016–2016–0032]

Petition for Exemption; Summary of Petition Received; Unmanned Services, Inc.

AGENCY: Federal Aviation Administration (FAA), DOT.

ACTION: Notice.

SUMMARY: This notice contains a summary of a petition seeking relief from specified requirements of Title 14 of the Code of Federal Regulations. The purpose of this notice is to improve the public's awareness of, and participation in, the FAA's exemption process. Neither publication of this notice nor the inclusion or omission of information in the summary is intended to affect the legal status of the petition or its final disposition.

DATES: Comments on this petition must identify the petition docket number and must be received on or before March 30, 2016.

ADDRESSES: Send comments identified by docket number FAA–2015–1302 using any of the following methods:

- *Federal eRulemaking Portal:* Go to *http://www.regulations.gov* and follow the online instructions for sending your comments electronically.
- *Mail:* Send comments to Docket Operations, M–30; U.S. Department of Transportation (DOT), 1200 New Jersey Avenue SE., Room W12–140, West Building Ground Floor, Washington, DC 20590–0001.
- *Hand Delivery or Courier:* Take comments to Docket Operations in Room W12–140 of the West Building Ground Floor at 1200 New Jersey Avenue SE., Washington, DC, between 9 a.m. and 5 p.m., Monday through Friday, except Federal holidays.
- *Fax:* Fax comments to Docket Operations at 202–493–2251.

Privacy: In accordance with 5 U.S.C. 553(c), DOT solicits comments from the public to better inform its rulemaking process. DOT posts these comments, without edit, including any personal information the commenter provides, to *http://www.regulations.gov,* as described in the system of records notice (DOT/ALL–14 FDMS), which can be reviewed at *http://www.dot.gov/privacy.*

Docket: Background documents or comments received may be read at *http://www.regulations.gov* at any time. Follow the online instructions for accessing the docket or go to the Docket Operations in Room W12–140 of the West Building Ground Floor at 1200 New Jersey Avenue SE., Washington, DC, between 9 a.m. and 5 p.m., Monday through Friday, except Federal holidays.

FOR FURTHER INFORMATION CONTACT: Joshua Parker (202) 267–1538, Office of Rulemaking, Federal Aviation Administration, 800 Independence Avenue SW., Washington, DC 20591.

This notice is published pursuant to 14 CFR 11.85.

Issued in Washington, DC, on March 3, 2016.

Lirio Liu,

Director, Office of Rulemaking.

Petition for Exemption

Docket No.: FAA–2015–1302

Petitioner: Unmanned Services, Inc.

Section(s) of 14 CFR Affected: §§ 61.23 (a)(1); 61.101 (e)(4)(5); 61.113 (a); 61.315 (a); 91.7 (a); 91.119 (c); 91.121; 91.151 (a)(1); 91.405 (a); 91.407 (a)(1); 91.409 (a)(1)(2); 91.417 (a)(b).

Description of Relief Sought: The petitioner is seeking relief to allow for an unmanned aircraft system (UAS) to report altitude in meters, to allow the Pilot in Command (PIC) to be able to transfer his or her designation, to change the PIC requirements to require only prior military UAS rated piloting experience and passage of FAA ground school knowledge test, to conduct nighttime operations, and operate from moving platforms.

[FR Doc. 2016–05343 Filed 3–9–16; 8:45 am]

BILLING CODE 4910–13–P

DEPARTMENT OF TRANSPORTATION

National Highway Traffic Safety Administration

[Docket No. NHTSA–2016–0026]

Notice of Buy America Waiver

AGENCY: National Highway Traffic Safety Administration (NHTSA), Department of Transportation (DOT).

ACTION: Notice of Buy America waiver.

SUMMARY: This notice provides NHTSA's finding with respect to a request to waive the requirements of Buy America from the Maine Bureau of Highway Safety (MBHS). NHTSA finds that a non-availability waiver of the Buy America requirement is appropriate for the purchase of a Leica total station using Federal highway traffic safety grant funds because there are no suitable products produced in the United States.

DATES: The effective date of this waiver is March 25, 2016. Written comments regarding this notice may be submitted to NHTSA and must be received on or before: March 25, 2016.

ADDRESSES: Written comments may be submitted using any one of the following methods:

- *Mail:* Docket Management Facility, M–30, U.S. Department of Transportation, West Building, Ground Floor, Rm. W12–140, 1200 New Jersey Avenue SE., Washington, DC 20590.
- *Fax:* Written comments may be faxed to (202) 493–2251.
- *Internet:* To submit comments electronically, go to the Federal regulations Web site at *http://www.regulations.gov.* Follow the online instructions for submitting comments.
- *Hand Delivery:* West Building Ground Floor, Room W12–140, 1200 New Jersey Avenue SE., between 9 a.m. and 5 p.m. Eastern Time, Monday through Friday, except Federal holidays.

Instructions: All comments submitted in relation to this waiver must include the agency name and docket number. Please note that all comments received will be posted without change to *http://www.regulations.gov,* including any personal information provided. You may also call the Docket at 202–366–9324.

FOR FURTHER INFORMATION CONTACT: For program issues, contact Barbara Sauers, Office of Regional Operations and Program Delivery, NHTSA (phone: 202–366–0144). For legal issues, contact Andrew DiMarsico, Office of Chief Counsel, NHTSA (phone: 202–366–5263). You may send mail to these officials at the National Highway Traffic Safety Administration, 1200 New Jersey Avenue SE., Washington, DC 20590.

SUPPLEMENTARY INFORMATION: This notice provides NHTSA's finding that a waiver of the Buy America requirement, 23 U.S.C. 313, is appropriate for MBHS to purchase a Leica Flexline TS02 Plus R500 Reflectorless Total Station for $12,925 using grant funds authorized under 23 U.S.C. 402. Section 402 funds are available for use by state highway safety programs that, among other things, reduce or prevent injuries and deaths resulting from speeding motor vehicles, driving while impaired by alcohol and or drugs, motorcycle accidents, school bus accidents, and unsafe driving behavior. 23 U.S.C. 402(a). Section 402 funds are also available to state programs that encourage the proper use of occupant protection devices and improve law enforcement services in motor vehicle accident prevention, traffic supervision, and post-accident procedures. *Id.*

Buy America provides that NHTSA ''shall not obligate any funds authorized to be appropriated to carry out the Surface Transportation Assistance Act of 1982 (96 Stat. 2097) or [Title 23] and administered by the Department of Transportation, unless steel, iron, and manufactured products used in such project are produced in the United States.'' 23 U.S.C. 313. However, NHTSA may waive those requirements if ''(1) their application would be inconsistent with the public interest; (2) such materials and products are not produced in the United States in sufficient and reasonably available quantities and of a satisfactory quality; or (3) the inclusion of domestic material will increase the cost of the overall project contract by more than 25 percent.'' 23 U.S.C. 313(b); 49 CFR 1.95(f).

MBHS seeks a waiver to purchase one (1) Leica Flexline TS02 Plus R500 Reflectorless total station for its subgrantee, the Maine State Police, using Federal grant funds, at a cost of $12,925. A total station is an electronic/optical instrument used in modern surveying and accident reconstruction. Specifically, a total station is an electronic theodolite integrated with an electronic distance meter to read slope distances from the instrument to a particular point. According to MBHS, the total station provides law enforcement with the equipment necessary to provide accurate and detailed crash reconstruction to aid in improving highway safety and for use with the enforcement of traffic safety laws. MBHS states that the total station reduces the time officers need to stand in the roadway with a prism to mark evidence at crash scenes. In addition, with a total station, evidence can be plotted from the side of the road after a roadway has been opened to traffic.

MBHS states that there are no total station models that are manufactured or assembled in the United States. In support of its waiver, MBHS cites to NHTSA's determination that a Buy America waiver was appropriate for the North Carolina Highway Safety Office to purchase a Nikon Nivo 5M plus Reflectorless total station. *See* 80 FR 72480 (November 19, 2015). In that notice, the agency noted that both North Carolina and NHTSA performed market analyses which revealed that all total station equipment are foreign made.[1] *Id.* at 72481. At this time, the agency is unaware of any total stations produced domestically.

NHTSA agrees that the total stations advance the purpose of section 402 to improve law enforcement services in motor vehicle accident prevention and post-accident reconstruction and enforcement. A total station is an on-

[1] In our November 19, 2015 notice, we noted that the combined market research of North Carolina and NHTSA found that the following manufacturers produced foreign made total stations: CT Berger (China); Leica (Switzerland); Leica Flexline TS02 Plus R500 Reflectorless Total Station (Japan); Spectra Precision (Japan); Northwest Instruments (China); Topcon (Japan); Trimble (Sweden); Hi-Target Instrument Surveying Co. Ltd. (China); geo-Fennel GmbH (Germany); Hilti (Liechtenstein); North Surveying (Spain); South Precision Instrument (China); Ruide Surveying Instrument Co. (China); Pentex (Japan/China); and Topcon (Japan, China and Thailand).

scene reconstruction tool that assists in the determination of the cause of the crash and can support crash investigations. It is an electronic/optical instrument that specializes in surveying with tools to provide precise measurements for diagraming crash scenes, including a laser range finder and a computer to assist law enforcement to determine post-accident reconstruction. The total station system is designed to gather evidence of the events leading up to, during and following a crash. These tools are used to gather evidence to determine such facts as minimum speed at the time of a crash, the critical speed of a roadway curve, the distance a vehicle may have traveled when out of control and other factors that involve a crash investigation. In some instances, the facts collected through the use of a total station are used to form a basis of a criminal charge or evidence in a criminal prosecution.

Based upon our recent market analysis, we are unaware of any total station equipment that is manufactured domestically. *Ibid.* Since a total station is unavailable from a domestic manufacturer and the equipment would assist in post-accident reconstruction and enforcement to advance the purpose of 23 U.S.C. 402, a Buy America waiver is appropriate. NHTSA invites public comment on this conclusion.

In light of the above discussion, and pursuant to 23 U.S.C. 313(b)(2), NHTSA finds that it is appropriate to grant a waiver from the Buy America requirements to MBHS in order to purchase the Leica total station equipment. This waiver applies to Maine and all other states seeking to use section 402 funds to purchase Leica total stations for the purposes mentioned herein. This waiver is effective through fiscal year 2016 and expires at the conclusion of the fiscal year (September 30, 2016). In accordance with the provisions of section 117 of the Safe, Accountable, Flexible, Efficient Transportation Equity Act: A Legacy of Users Technical Corrections Act of 2008 (Pub. L. 110–244, 122 Stat. 1572), NHTSA is providing this notice as its finding that a waiver of the Buy America requirements is appropriate for the Leica total station.

Written comments on this finding may be submitted through any of the methods discussed above. NHTSA may reconsider this finding if, through comment, it learns additional relevant information regarding its decision to grant MBHS's waiver request.

This finding should not be construed as an endorsement or approval of any products by NHTSA or the U.S. Department of Transportation. The United States Government does not endorse products or manufacturers.

Authority: 23 U.S.C. 313; Pub. L. 110–161.

Issued in Washington, DC, on March 4, 2016 under authority delegated in 49 CFR part 1.95.

Paul A. Hemmersbaugh,

Chief Counsel.

[FR Doc. 2016–05371 Filed 3–9–16; 8:45 am]

BILLING CODE 4910–59–P

DEPARTMENT OF TRANSPORTATION

Office of the Secretary

[Docket No. DOT–OST–2015–0248]

Draft National Freight Strategic Plan: Notice of Deadline for Submitting Comments

ACTION: Notice of deadline for submitting comments.

SUMMARY: This notice announces a deadline for submitting comments on the draft National Freight Strategic Plan (NFSP) to the U.S. Department of Transportation (DOT) to satisfy requirements of the Moving Ahead for Progress in the 21st Century Act (MAP–21) and the Fixing America's Surface Transportation Act (FAST Act). On October 18, 2015, DOT released for public comment a draft NFSP (available at *https://www.transportation.gov/sites/dot.gov/files/docs/DRAFT_NFSP_for_Public_Comment_508_10%2015%20 15%20v1.pdf*). The DOT intends to consider all comments received from the public when updating and finalizing the NFSP to be consistent with the FAST Act requirements.

DATES: Comments must be received on or before April 25, 2016 to receive full consideration by DOT with respect to the final NFSP.

ADDRESSES: Comments on the draft NFSP may be submitted and viewed at Docket Number DOT–OST–2015–0248. The web address is: *http://www.regulations.gov/#!docketDetail;D=DOT-OST-2015-0248.*

FOR FURTHER INFORMATION CONTACT: Vinn White, at (202) 366–9044 or email *freight@dot.gov.*

Additional Information

BACKGROUND: The MAP–21 (Pub. L. 112–141) required DOT to develop a NFSP that included (1) an assessment of the conditions and performance of the National Freight Network; (2) an identification of bottlenecks on the National Freight Network that create significant freight congestion; (3) forecasts of freight volumes; (4) an identification of major trade gateways and national freight corridors; (5) an assessment of statutory, regulatory, technological, institutional, financial, and other barriers to improved freight transportation performance, including a description of opportunities for overcoming the barriers; (6) an identification of corridors providing access to energy exploration, development, installation, or production areas; (7) an identification of best practices for improving the performance of the National Freight Network; (8) an identification of best practices to mitigate the impacts of freight movement on communities; (9) a process for addressing multistate projects and encouraging jurisdictions to collaborate; and (10) strategies to improve freight intermodal connectivity.

On October 18, 2015, the DOT issued the draft NFSP for public comment, available at *www.transportation.gov/freight* and also at *http://www.regulations.gov/#!docketDetail;D=DOT-OST-2015-0248.* At that time, the DOT requested comments on the draft NFSP but did not provide a specific date by which comments were due. To date, the DOT has received numerous comments from the public but understands that many in the public who plan to submit comments have been waiting for specific instructions about the end of the comment period.

On December 4, 2015, the President signed the FAST Act (Pub. L. 114–94) into law, before the draft NFSP could be finalized. Section 8001 of the FAST Act continues the requirement that the DOT develop an NFSP, generally requiring most of the same content for the NFSP as was required under MAP–21. The FAST Act specifically makes the NFSP multimodal in scope, links it to the National Multimodal Freight Network (NMFN) (created under the FAST Act) rather than the former National Freight Network created under MAP–21, and also requires the NFSP to include an identification of corridors providing access to major areas for manufacturing, agriculture, or natural resources and requires the DOT to provide notice and an opportunity for public comment.

The DOT is currently in the process of revising the October 18, 2015 draft NFSP to conform to the additional requirements of the FAST Act. Whereas the FAST Act allows the DOT to take up to two years from the date of the FAST Act's enactment to complete the NFSP, the DOT intends to make use of the work already completed on the October 18, 2015 draft NFSP, as modified by comments received from the public on

that draft and the new FAST Act provisions, to issue a fully compliant National Freight Strategic Plan in final format by the end of July 2016. To do so, the DOT is asking the public to submit comments on the October 18, 2015 draft NFSP on or before [45 days from posting of this notice] to receive full consideration by DOT with respect to the final NFSP. Commenters are encouraged to address any aspects of the draft NFSP or the FAST Act that they believe should be reflected in the final National Freight Strategic Plan. All comments on the draft NFSP that have already been submitted to DOT will be transferred to this docket and will receive full consideration by the DOT with respect to the NFSP to be issued by the end of July 2016. Commenters who have already responded prior to this notice are also free to update or replace their previous comments.

The DOT is also working to establish an Interim National Multimodal Freight Network (NMFN) that is due 180 days following the enactment date of the FAST Act, which would be on June 1, 2016. The NMFN will be similar in concept to the draft multimodal freight network that was issued as part of the October 18, 2015 draft NFSP, but will now be handled as a separate product from the NFSP. The DOT will publish a separate **Federal Register** notice on or about June 1, 2016 requesting public comment on the Interim NMFN. The NFSP will reference the NMFN but not include it. All comments on the draft NFSP that pertain to the multimodal freight network included in the draft NFSP will receive full consideration by the DOT with respect to the development of the Interim Final Multimodal Freight Network.

Public Comment: The DOT invites comments by all those interested in the draft National Freight Strategic Plan. Comments on the draft NFSP may be submitted and viewed at Docket Number DOT–OST–2015–0248. The web address is: *http://www.regulations.gov/#!docketDetail;D=DOT-OST-2015-0248.* Comments must be received on or before [45 days from posting of this notice] to receive full consideration by DOT with respect to the final NFSP. After [45 days from posting of this notice], comments will continue to be available for viewing by the public.

Dated: March 3, 2016.

Vinn White,

Deputy Assistant Secretary for Transportation Policy.

[FR Doc. 2016–05370 Filed 3–9–16; 8:45 am]

BILLING CODE 4910–9X–P

DEPARTMENT OF THE TREASURY

Office of the Comptroller of the Currency

[Docket ID OCC–2016–0004]

Minority Depository Institutions Advisory Committee Meeting

AGENCY: Office of the Comptroller of the Currency, Department of the Treasury.

ACTION: Notice.

SUMMARY: The Office of the Comptroller of the Currency (OCC) announces a meeting of the Minority Depository Institutions Advisory Committee (MDIAC).

DATES: The OCC MDIAC will hold a public meeting on Tuesday, April 5, 2016, beginning at 8:00 a.m. Eastern Daylight Time (EDT).

ADDRESSES: The OCC will hold the April 5, 2016 meeting of the MDIAC at the Office of the Comptroller of the Currency, 400 7th Street SW., Washington, DC 20219.

FOR FURTHER INFORMATION CONTACT: Beverly Cole, Designated Federal Officer and Senior Advisor to the Senior Deputy Comptroller for Midsize and Community Bank Supervision, (202) 649–5420, Office of the Comptroller of the Currency, Washington, DC, 20219.

SUPPLEMENTARY INFORMATION: By this notice, the OCC is announcing that the MDIAC will convene a meeting at 8:00 a.m. EDT on Tuesday, April 5, 2016, at the Office of the Comptroller of the Currency, 400 7th Street SW., Washington, DC 20219. Agenda items will include current topics of interest to the industry. The purpose of the meeting is for the MDIAC to advise the OCC on steps the agency may be able to take to ensure the continued health and viability of minority depository institutions and other issues of concern to minority depository institutions. Members of the public may submit written statements to the MDIAC by any one of the following methods:

- Email to: *MDIAC@OCC.treas.gov.*
- Mail to: Beverly Cole, Designated Federal Officer, Office of the Comptroller of the Currency, 400 7th Street SW., Washington, DC 20219.

The OCC must receive written statements no later than Tuesday, March 29, 2016. Members of the public who plan to attend the meeting should contact the OCC by 5:00 p.m. EDT on Tuesday, March 29, 2016 to inform the OCC of their desire to attend the meeting and to provide information that will be required to facilitate entry into the meeting. Members of the public may contact the OCC via email at *MDIAC@OCC.treas.gov* or by telephone at (202) 649–5420. Attendees should provide their full name, email address, and organization, if any. For security reasons, attendees will be subject to security screening procedures and must present a valid government-issued identification to enter the building. Members of the public who are deaf or hard of hearing should call (202) 649–5597 (TTY) at least five days before the meeting to arrange auxiliary aids such as sign language interpretation for this meeting.

Dated: March 4, 2016.

Thomas J. Curry,

Comptroller of the Currency.

[FR Doc. 2016–05339 Filed 3–9–16; 8:45 am]

BILLING CODE 4810–33–P

DEPARTMENT OF THE TREASURY

Internal Revenue Service

Proposed Collection; Comment Request for Form 14157 and Form 14157–A

AGENCY: Internal Revenue Service (IRS), Treasury.

ACTION: Notice and request for comments.

SUMMARY: The Department of the Treasury, as part of its continuing effort to reduce paperwork and respondent burden, invites the general public and other Federal agencies to take this opportunity to comment on proposed and/or continuing information collections, as required by the Paperwork Reduction Act of 1995, Public Law 104–13 (44 U.S.C. 3506(c)(2)(A)). Currently, the IRS is soliciting comments concerning Form 14157, *Complaint: Tax Return Preparer* and Form 14157–A, *Tax Return Preparer Fraud or Misconduct Affidavit.*

DATES: Written comments should be received on or before May 9, 2016 to be assured of consideration.

ADDRESSES: Direct all written comments to Tuawana Pinkston, Internal Revenue Service, room 6129, 1111 Constitution Avenue NW., Washington, DC 20224.

FOR FURTHER INFORMATION CONTACT: Requests for additional information or copies of the form and instructions should be directed to R. Joseph Durbala, at (202) 317–5746, or at Internal Revenue Service, room 6129, 1111 Constitution Avenue NW., Washington, DC 20224, or through the internet, at *RJoseph.Durbala@irs.gov.*

SUPPLEMENTARY INFORMATION:

Title: Tax Return Preparer Complaint.

OMB Number: 1545–2168.

Form Number: Form 14157 and Form 14157–A.

Abstract: These forms will be used by taxpayers to report allegations of misconduct by tax return preparers. The forms are created specifically for tax return preparer complaints and include items necessary for the IRS to effectively evaluate the complaint and route to the appropriate function.

Current Actions: This is a request for extension of a currently approved collection.

Type of Review: Extension to previously approved IC.

Affected Public: Individuals or households and businesses and other for-profits.

Estimated Number of Respondents: 1,500.

Estimated Average Time per Respondent: 1 hour.

Estimated Total Annual Burden Hours: 1,500 hours.

The following paragraph applies to all of the collections of information covered by this notice:

An agency may not conduct or sponsor, and a person is not required to respond to, a collection of information unless the collection of information displays a valid OMB control number. Books or records relating to a collection of information must be retained as long as their contents may become material in the administration of any internal revenue law. Generally, tax returns and tax return information are confidential, as required by 26 U.S.C. 6103.

Request For Comments: Comments submitted in response to this notice will be summarized and/or included in the request for OMB approval. All comments will become a matter of public record. Comments are invited on: (a) Whether the collection of information is necessary for the proper performance of the functions of the agency, including whether the information shall have practical utility; (b) the accuracy of the agency's estimate of the burden of the collection of information; (c) ways to enhance the quality, utility, and clarity of the information to be collected; (d) ways to minimize the burden of the collection of information on respondents, including through the use of automated collection techniques or other forms of information technology; and (e) estimates of capital or start-up costs and costs of operation, maintenance, and purchase of services to provide information.

Dated: March 2, 2016.

R. Joseph Durbala,

IRS, Reports Clearance Analyst.

[FR Doc. 2016–05336 Filed 3–9–16; 8:45 am]

BILLING CODE 4830–01–P

DEPARTMENT OF THE TREASURY

Internal Revenue Service

Proposed Collection; Comment Request For Regulation Project

AGENCY: Internal Revenue Service (IRS), Treasury.

ACTION: Notice and request for comments.

SUMMARY: The Department of the Treasury, as part of its continuing effort to reduce paperwork and respondent burden, invites the general public and other Federal agencies to take this opportunity to comment on proposed and/or continuing information collections, as required by the Paperwork Reduction Act of 1995, Public Law 104–13 (44 U.S.C. 3506(c)(2)(A)). Currently, the IRS is soliciting comments concerning subchapter S subsidiaries.

DATES: Written comments should be received on or before May 9, 2016 to be assured of consideration.

ADDRESSES: Direct all written comments Christie Preston, Internal Revenue Service, Room 6129, 1111 Constitution Avenue NW., Washington, DC 20224.

FOR FURTHER INFORMATION CONTACT: Requests for additional information or copies of this regulation should be directed to Allan Hopkins, Internal Revenue Service, Room 6129, 1111 Constitution Avenue NW., Washington, DC 20224, or through the internet at *Allan.M.Hopkins@irs.gov.*

SUPPLEMENTARY INFORMATION:

Title: Subchapter S Subsidiaries.

OMB Number: 1545–1590.

Regulation Project Number: REG–251698–96.

Abstract: This regulation relates to the treatment of corporate subsidiaries of S corporations and interprets the rules added to the Internal Revenue Code by section 1308 of the Small Business Job Protection Act of 1996. The collection of information required in the regulation is necessary for a taxpayer to obtain, retain, or terminate S corporation treatment.

Current Actions: There is no change to this regulation.

Type of Review: Reinstatement of a previously approved collection.

Affected Public: Businesses or other for-profit organizations, individuals, and farms.

Estimated Number of Respondents: 10,660.

Estimated Time per Respondent: 57 minutes.

Estimated Total Annual Reporting Burden Hours: 10,110.

The following paragraph applies to all of the collections of information covered by this notice:

An agency may not conduct or sponsor, and a person is not required to respond to, a collection of information unless the collection of information displays a valid OMB control number. Books or records relating to a collection of information must be retained as long as their contents may become material in the administration of any internal revenue law. Generally, tax returns and tax return information are confidential, as required by 26 U.S.C. 6103.

Request for Comments: Comments submitted in response to this notice will be summarized and/or included in the request for OMB approval. All comments will become a matter of public record. Comments are invited on: (a) Whether the collection of information is necessary for the proper performance of the functions of the agency, including whether the information shall have practical utility; (b) the accuracy of the agency's estimate of the burden of the collection of information; (c) ways to enhance the quality, utility, and clarity of the information to be collected; (d) ways to minimize the burden of the collection of information on respondents, including through the use of automated collection techniques or other forms of information technology; and (e) estimates of capital or start-up costs and costs of operation, maintenance, and purchase of services to provide information.

Approved: March 4, 2016.

Allan Hopkins,

Tax Analyst.

[FR Doc. 2016–05340 Filed 3–9–16; 8:45 am]

BILLING CODE 4830–01–P

DEPARTMENT OF THE TREASURY

Internal Revenue Service

Proposed Collection; Comment Request for Revenue Procedure 97–33

AGENCY: Internal Revenue Service (IRS), Treasury.

ACTION: Notice and request for comments.

SUMMARY: The Department of the Treasury, as part of its continuing effort to reduce paperwork and respondent burden, invites the general public and other Federal agencies to take this opportunity to comment on proposed and/or continuing information collections, as required by the Paperwork Reduction Act of 1995, Public Law 104–13 (44 U.S.C. 3506(c)(2)(A)). Currently, the IRS is

soliciting comments concerning Revenue Procedure 97–33, Electronic Federal Tax Payment System (EFTPS).

DATES: Written comments should be received on or before May 9, 2016 to be assured of consideration.

ADDRESSES: Direct all written comments to Tuawana Pinkston, Internal Revenue Service, Room 6129, 1111 Constitution Avenue NW., Washington, DC 20224.

FOR FURTHER INFORMATION CONTACT: Requests for additional information or copies of the regulations should be directed to Allan Hopkins at Internal Revenue Service, Room 6129, 1111 Constitution Avenue NW., Washington, DC 20224, or through the Internet at *Allan.M.Hopkins@irs.gov*.

SUPPLEMENTARY INFORMATION:

Title: Federal Tax Payment System (EFTPS).

OMB Number: 1545–1546.

Revenue Procedure Number: Revenue Procedure 97–33.

Abstract: The Electronic Federal Tax Payment System (EFTPS) is an electronic remittance processing system for making federal tax deposits (FTDs) and federal tax payments (FTPs). Revenue Procedure 97–33 provides taxpayers with information and procedures that will help them to electronically make FTDs and tax payments through EFTPS.

Current Actions: There are no changes being made to the revenue procedure at this time.

Type of Review: Extension of a currently approved collection.

Affected Public: Individuals or households, business or other for-profit organizations, not-for-profit institutions, farms, and Federal, state, local or tribal governments.

Estimated Number of Respondents: 557,243.

Estimated Average Time per Respondent: 30 minutes.

Estimated Total Annual Burden Hours: 278,622.

The following paragraph applies to all the collections of information covered by this notice:

An agency may not conduct or sponsor, and a person is not required to respond to, a collection of information unless the collection of information displays a valid OMB control number.

Books or records relating to a collection of information must be retained as long as their contents may become material in the administration of any internal revenue law. Generally, tax returns and tax return information are confidential, as required by 26 U.S.C. 6103.

Request for Comments: Comments submitted in response to this notice will be summarized and/or included in the request for OMB approval. All comments will become a matter of public record. Comments are invited on: (a) Whether the collection of information is necessary for the proper performance of the functions of the agency, including whether the information shall have practical utility; (b) the accuracy of the agency's estimate of the burden of the collection of information; (c) ways to enhance the quality, utility, and clarity of the information to be collected; (d) ways to minimize the burden of the collection of information on respondents, including through the use of automated collection techniques or other forms of information technology; and (e) estimates of capital or start-up costs and costs of operation, maintenance, and purchase of services to provide information.

Approved: March 2, 2016.

Allan Hopkins,

Tax Analyst.

[FR Doc. 2016–05337 Filed 3–9–16; 8:45 am]

BILLING CODE 4830–01–P

DEPARTMENT OF THE TREASURY

Submission for OMB Review; Comment Request

March 4, 2016.

The Department of the Treasury will submit the following information collection requests to the Office of Management and Budget (OMB) for review and clearance in accordance with the Paperwork Reduction Act of 1995, Public Law 104–13, on or after the date of publication of this notice.

DATES: Comments should be received on or before April 11, 2016 to be assured of consideration.

ADDRESSES: Send comments regarding the burden estimates, or any other aspect of the information collections, including suggestions for reducing the burden, to (1) Office of Information and Regulatory Affairs, Office of Management and Budget, Attention: Desk Officer for Treasury, New Executive Office Building, Room 10235, Washington, DC 20503, or email at *OIRA_Submission@OMB.EOP.gov* and (2) Treasury PRA Clearance Officer, 1750 Pennsylvania Ave. NW., Suite 8117, Washington, DC 20220, or email at *PRA@treasury.gov.*

FOR FURTHER INFORMATION CONTACT: Copies of the submissions may be obtained by emailing *PRA@treasury.gov,* calling (202) 622–1295, or viewing the entire information collection request at *www.reginfo.gov.*

Internal Revenue Service (IRS)

OMB Number: 1545–2261.

Type of Review: Revision of a currently approved collection.

Title: Consumer Tipping Survey.

Abstract: The IRS is charged with collecting revenue legally owed to the federal government. One important category of income comes in the form of tips. Previous empirical research has shown income from tips to be significantly underreported, limiting the IRS's ability to collect the proper amount of tax revenue. The IRS believes a new study of consumer tipping practices is needed in order to better understand current tip reporting behavior so tax administrators and policy makers can make the tax system fairer and more efficient. The main goal for this survey effort is to generate statistically valid estimates of tipped income in a variety of services for which no such estimates exist, in addition to providing information on other correlates of tipped income and behavior including, but not limited to, regional or seasonal fluctuations in tipped income.

Estimated Total Annual Burden Hours: 11,144.

OMB Number: 1545–1548.

Type of Review: Reinstatement without change of a previously approved collection.

Title: Rev. Proc. 2013–30, Uniform Late S Corporation Election Revenue Procedure.

Abstract: The information will help the IRS determine whether a taxpayer has met the requirements of the Rev Proc and whether a taxpayer has reasonable cause for failing to make a timely election. The collection is required to make a late election pursuant to this Rev Proc. This information will be used to determine whether the eligibility requirements for obtaining relief have been met. Modifies and supersedes and makes obsolete Rev. Proc's. 2003–43, 2004–48, and 2007–62.

Estimated Total Annual Burden Hours: 50,000.

Brenda Simms,

Treasury PRA Clearance Officer.

[FR Doc. 2016–05290 Filed 3–9–16; 8:45 am]

BILLING CODE 4830–01–P

DEPARTMENT OF THE TREASURY

Proposed Collection; Comment Request

AGENCY: Departmental Offices, Treasury.

ACTION: Notice and request for comments.

SUMMARY: The Department of the Treasury, as part of its continuing effort to reduce paperwork and respondent burden, invites the general public and other Federal agencies to comment on an extension of an existing information collection, as required by the Paperwork Reduction Act of 1995, Public Law 104–13 (44 U.S.C. 3506(c)(2)(A)).

DATES: Written comments should be received on or before May 9, 2016 to be assured of consideration.

ADDRESSES: Send comments regarding the burden estimate, or any other aspect of the information collection, including suggestions for reducing the burden, to Treasury PRA Clearance Officer, 1750 Pennsylvania Ave. NW., Suite 8117, Washington, DC 20220, or email at *PRA@treasury.gov.*

FOR FURTHER INFORMATION CONTACT: Requests for additional information should be directed to Treasury PRA Clearance Officer, 1750 Pennsylvania Ave. NW., Suite 8117, Washington, DC 20220, or email at *PRA@treasury.gov.*

SUPPLEMENTARY INFORMATION:

OMB Control Number: 1505–NEW.

Title: Collection of Data From Property and Casualty Insurers for a Report on the Effectiveness of the Terrorism Risk Insurance Program.

Abstract: This information collection is made necessary by the provisions of the Terrorism Risk Insurance Program Reauthorization Act of 2015 (Pub. L. 114–1, 129 Stat. 3). Title I of the Terrorism Risk Insurance Act of 2002 (Pub. L. 107–297, 116 Stat. 2322) (the Act) establishes a temporary federal program of shared public and private compensation for insured commercial property and casualty losses resulting from an act of terrorism. The Act authorizes Treasury to administer and implement the Terrorism Risk Insurance Program (Program), including the issuance of regulations and procedures. The Program provides a federal backstop for insured losses from an act of terrorism. Although the Program was originally set to expire on December 31, 2005, it has now been extended and amended on three occasions; most recently, 2015 Reauthorization Act extended the Program through December 31, 2020. Section 111 of the 2015 Reauthorization Act provides that the Secretary of the Treasury, commencing in the calendar year beginning on January 1, 2016, shall require insurers participating in the Program to submit information regarding insurance coverage for terrorism losses in order to analyze the effectiveness of the Program. Section 111(h)(2) of the 2015 Reauthorization Act requires the Secretary to submit a report by June 30, 2016 to Committees of the House of Representatives and of the Senate on the overall effectiveness of the Program, among other things. Proposed rules addressing data collection are now pending OMB review. Treasury sought emergency clearance and review for the 2016 data collection only, as the normal public review and comment processes will not permit the collection of data under the proposed rules in time for Treasury to complete a June 30, 2016 Report to Congress. Treasury intends to make the initial request voluntary on the part of participating insurers. Each entity that meets the Act's definition of insurer (based upon existing information, over 2000 individual firms, within approximately 800 separate insurance groups) must participate in the Program.

Type of Review: New collection.

Affected Public: Businesses or other for-profits.

Estimated Number of Respondents: 300.

Estimated Total Annual Burden Hours: 10,000.

Request for Comment: Comments submitted in response to this notice will be summarized and included in the request for Office of Management and Budget approval. Comments may become a matter of public record. The public is invited to submit comments concerning: (a) Whether the collection of information is necessary for the proper performance of the functions of the agency, including whether the information will have practical utility; (b) the accuracy of the agency's estimate of the burden of the collection of information; (c) ways to enhance the quality, utility, and clarity of the information to be collected; (d) ways to minimize the burden of the collection of information on respondents, including the use of automated collection techniques or other forms of information technology; and (e) estimates of capital or start-up costs and costs of operation, maintenance, and purchase of services to provide information.

Dated: March 7, 2016.

Brenda Simms,

Treasury PRA Clearance Officer.

[FR Doc. 2016–05364 Filed 3–9–16; 8:45 am]

BILLING CODE 4810–25–P

FEDERAL REGISTER

Vol. 81 Thursday,

No. 47 March 10, 2016

Part II

The President

Proclamation 9405—Death of Nancy Reagan

Federal Register
Vol. 81, No. 47
Thursday, March 10, 2016

Presidential Documents

Title 3—

The President

Proclamation 9405 of March 7, 2016

Death of Nancy Reagan

By the President of the United States of America

A Proclamation

As a mark of respect for the memory of Nancy Reagan, I hereby order, by the authority vested in me by the Constitution and the laws of the United States of America, that the flag of the United States shall be flown at half-staff at the White House and upon all public buildings and grounds, at all military posts and naval stations, and on all naval vessels of the Federal Government in the District of Columbia and throughout the United States and its Territories and possessions until sunset, on the day of interment. I also direct that the flag shall be flown at half-staff for the same period at all United States embassies, legations, consular offices, and other facilities abroad, including all military facilities and naval vessels and stations.

IN WITNESS WHEREOF, I have hereunto set my hand this seventh day of March, in the year of our Lord two thousand sixteen, and of the Independence of the United States of America the two hundred and fortieth.

[FR Doc. 2016–05619
Filed 3–9–16; 11:15 am]
Billing code 3295–F6–P

FEDERAL REGISTER

Vol. 81 Thursday,

No. 47 March 10, 2016

Part III

The President

Notice of March 9, 2016—Continuation of the National Emergency With Respect to Iran

Federal Register
Vol. 81, No. 47
Thursday, March 10, 2016

Presidential Documents

Title 3—

The President

Notice of March 9, 2016

Continuation of the National Emergency With Respect to Iran

On March 15, 1995, by Executive Order 12957, the President declared a national emergency with respect to Iran, pursuant to the International Emergency Economic Powers Act (50 U.S.C. 1701–1706), to deal with the unusual and extraordinary threat to the national security, foreign policy, and economy of the United States constituted by the actions and policies of the Government of Iran. On May 6, 1995, the President issued Executive Order 12959, imposing comprehensive sanctions on Iran to further respond to this threat. On August 19, 1997, the President issued Executive Order 13059, consolidating and clarifying the previous orders. I took additional steps pursuant to this national emergency in Executive Order 13553 of September 28, 2010, Executive Order 13574 of May 23, 2011, Executive Order 13590 of November 20, 2011, Executive Order 13599 of February 5, 2012, Executive Order 13606 of April 22, 2012, Executive Order 13608 of May 1, 2012, Executive Order 13622 of July 30, 2012, Executive Order 13628 of October 9, 2012, and Executive Order 13645 of June 3, 2013.

On July 14, 2015, the P5+1 (China, France, Germany, Russia, the United Kingdom, and the United States), the European Union, and Iran reached a Joint Comprehensive Plan of Action (JCPOA) to ensure that Iran's nuclear program is and will remain exclusively peaceful. January 16, 2016, marked Implementation Day under the JCPOA, when the International Atomic Energy Agency issued a report verifying that Iran had completed key nuclear-related steps as specified in the JCPOA, and the Secretary of State confirmed the report's findings. As a result, the United States lifted nuclear-related sanctions on Iran consistent with its commitments under the JCPOA, including the termination of a number of Executive Orders that were issued pursuant to this national emergency. Though the lifting of nuclear-related sanctions constitutes a significant change in our sanctions posture, non-nuclear related sanctions remain in place.

Despite the historic deal to ensure the exclusively peaceful nature of Iran's nuclear program, certain actions and policies of the Government of Iran continue to pose an unusual and extraordinary threat to the national security, foreign policy, and economy of the United States. For this reason, the national emergency declared on March 15, 1995, must continue in effect beyond March 15, 2016. Therefore, in accordance with section 202(d) of the National Emergencies Act (50 U.S.C. 1622(d)), I am continuing for 1 year the national emergency with respect to Iran declared in Executive Order 12957. The emergency declared in Executive Order 12957 constitutes an emergency separate from that declared on November 14, 1979, by Executive Order 12170. This renewal, therefore, is distinct from the emergency renewal of November 2015.

This notice shall be published in the *Federal Register* and transmitted to the Congress.

THE WHITE HOUSE,
March 9, 2016.

[FR Doc. 2016–05634
Filed 3–9–16; 11:15 am]
Billing code 3295–F6–P

Reader Aids

Federal Register

Vol. 81, No. 47

Thursday, March 10, 2016

CUSTOMER SERVICE AND INFORMATION

Federal Register/Code of Federal Regulations	
General Information, indexes and other finding aids	**202–741–6000**
Laws	**741–6000**
Presidential Documents	
Executive orders and proclamations	**741–6000**
The United States Government Manual	**741–6000**
Other Services	
Electronic and on-line services (voice)	**741–6020**
Privacy Act Compilation	**741–6064**
Public Laws Update Service (numbers, dates, etc.)	**741–6043**

ELECTRONIC RESEARCH

World Wide Web

Full text of the daily Federal Register, CFR and other publications is located at: **www.fdsys.gov.**

Federal Register information and research tools, including Public Inspection List, indexes, and Code of Federal Regulations are located at: **www.ofr.gov.**

E-mail

FEDREGTOC-L (Federal Register Table of Contents LISTSERV) is an open e-mail service that provides subscribers with a digital form of the Federal Register Table of Contents. The digital form of the Federal Register Table of Contents includes HTML and PDF links to the full text of each document.

To join or leave, go to **http://listserv.access.gpo.gov** and select *Online mailing list archives, FEDREGTOC-L, Join or leave the list (or change settings);* then follow the instructions.

PENS (Public Law Electronic Notification Service) is an e-mail service that notifies subscribers of recently enacted laws.

To subscribe, go to **http://listserv.gsa.gov/archives/publaws-l.html** and select *Join or leave the list (or change settings);* then follow the instructions.

FEDREGTOC-L and **PENS** are mailing lists only. We cannot respond to specific inquiries.

Reference questions. Send questions and comments about the Federal Register system to: **fedreg.info@nara.gov**

The Federal Register staff cannot interpret specific documents or regulations.

CFR Checklist. Effective January 1, 2009, the CFR Checklist no longer appears in the Federal Register. This information can be found online at **http://bookstore.gpo.gov/.**

FEDERAL REGISTER PAGES AND DATE, MARCH

10433–10754 1
10755–11090 2
11091–11406 3
11407–11658 4
11659–12000 7
12001–12404 8
12405–12572 9
12573–12794 10

CFR PARTS AFFECTED DURING MARCH

At the end of each month the Office of the Federal Register publishes separately a List of CFR Sections Affected (LSA), which lists parts and sections affected by documents published since the revision date of each title.

3 CFR

Proclamations:
9399 11091
9400 11093
9401 11095
9402 11097
9403 11653
9404 12571
9405 12789

Executive Orders:
13720 11089

Administrative Orders:
Memorandums:
Memorandum of March 1, 2016 11997
Notices:
Notice of March 2, 2016 11655
Notice of March 2, 2016 11657
Notice of March 3, 2016 11999
Notice of March 9, 2016 12793

5 CFR

Proposed Rules:
870 12032

7 CFR

25 11000
65 10755
246 10433
905 10451
1470 12573
1703 11000
1709 11000
1710 11000
1717 11000
1720 11000
1721 11000
1724 11000
1726 11000
1737 11000
1738 11000
1739 11000
1740 11000
1753 11000
1774 11000
1775 11000
1779 .....10456, 11000
1780 .....10456, 11000
1781 11000
1782 11000
1784 11000
1794 11000
1924 11000
1940 11000
1942 .....10456, 11000
1944 11000
1948 11000
1951 11000
1955 11000
1962 11000
1970 11000
1980 11000
3550 11000
3555 11000
3560 11000
3565 11000
3570 .....10456, 11000
3575 .....10456, 11000
4274 11000
4279 .....10456, 11000
4280 .....10456, 11000
4284 11000
4287 11000
4288 11000
4290 11000

Proposed Rules:
800 10530
925 12605
989 11678
1214 10530

8 CFR

Proposed Rules:
212 12032

10 CFR

Proposed Rules:
50 .....10780, 11681
52 11681
54 11681
100 11681
429 11686
430 11454
900 11686

12 CFR

1026 11099

Proposed Rules:
380 10798

14 CFR

25 10761
39 .....10457, 10460, 10465, 10468, 11407, 11409, 12405, 12409, 12413, 12583, 12585
71 .....11102, 11103, 11413, 11414, 12001, 12002
95 11659
252 11415

Proposed Rules:
39 .....10533, 10535, 10537, 10540, 10544, 10545, 10549, 11132, 11134, 11465, 11467, 11469, 11471, 11473, 11475, 11687, 11690, 12039, 12041, 12044, 12047
71 .....10551, 11136, 11139, 11692, 11694, 11695

15 CFR

701 10472

744 12004
Proposed Rules:
30 12423

16 CFR

1610 12587
Proposed Rules:
23 11697

17 CFR

Proposed Rules:
302 10798

18 CFR

11 ....10475, 12006

21 CFR

14 11663
558 11664
801 11428
830 11428
1308 11429
Proposed Rules:
15 12430
820 11477
864 10553
878 ....11140, 11151
888 12607
1308 11479

22 CFR

Proposed Rules:
41 12050

24 CFR

5 12354
880 12354
884 12354
886 12354
891 12354
903 12354
960 12354
966 12354
982 12354
983 12354
990 12354
Proposed Rules:
266 12051
960 12613

25 CFR

20 10475
151 10477

26 CFR

1 ....11104, 11431
301 10479
Proposed Rules:
1 ....11160, 11486
301 11486

27 CFR

9 ....11110, 11103

29 CFR

1910 10490

31 CFR

605 11432
Proposed Rules:
1010 ....11496, 12613

32 CFR

104 10491
199 11665
706 11116
Proposed Rules:
89 11698

33 CFR

117 ....11118, 11434, 11668, 12007
165 ....10498, 10499, 10501, 10762, 11435, 11437, 12588
Proposed Rules:
100 10557
165 ....10820, 11161, 11706

34 CFR

Proposed Rules:
300 10968
Ch. VI 12622

36 CFR

242 12590
1275 12007
Proposed Rules:
1223 12432
1224 12432
1227 12432
1229 12432
1232 12432
1233 12432
1239 12432

38 CFR

17 10764
38 10765
70 10504
Proposed Rules:
14 12625

39 CFR

Proposed Rules:
551 11164

40 CFR

52 ....11120, 11438, 11445, 11668, 11671, 11673, 12591, 12595
75 10508
180 ....10771, 10776, 11121, 12011, 12015
Proposed Rules:
52 ....10559, 11497, 11711, 11716, 11717, 11726, 11727, 12440, 12626, 12627, 12636, 12637
81 10563
85 10822
86 10822
1036 10822
1037 10822
1065 10822
1066 10822
1068 10822

42 CFR

435 ....11447, 12599
495 11447
510 11449
Proposed Rules:
405 ....10720, 12024
410 12024
411 12024
414 12024
424 10720
425 12024
455 10720
457 10720
495 12024

43 CFR

2 11124

45 CFR

144 12204
147 12204
153 12204
154 12204
155 12204
156 12204
158 12204
1201 12599
2505 12599
2507 12599
2508 12599
Proposed Rules:
170 11056

46 CFR

401 11908
403 11908
404 11908
501 10508
502 10508

47 CFR

90 10519
Proposed Rules:
15 11166
63 11500
64 12062
74 11166

48 CFR

Ch. I 11988, 11993
1 11988
4 ....11988, 11992
9 11988
22 ....11988, 11992
25 11992
36 11992
52 ....11988, 11992
1809 12420
1812 10519
1819 10519
1852 ....10519, 12420

49 CFR

578 10520
1540 11364
Proposed Rules:
222 11734
240 12642
242 12642
350 12062
365 12062
380 11944
383 11944
384 11944
385 12062
386 12062
387 12062
391 12642
395 ....12062, 12443
523 10822
534 10822
535 10822
571 12647

50 CFR

100 12590
622 ....11451, 12601
635 12602
648 ....12030, 12420
679 11452
Proposed Rules:
622 ....11166, 11502
648 11168
660 12676

LIST OF PUBLIC LAWS

Note: No public bills which have become law were received by the Office of the Federal Register for inclusion in today's **List of Public Laws**.

Last List March 2, 2016

Public Laws Electronic Notification Service (PENS)

PENS is a free electronic mail notification service of newly enacted public laws. To subscribe, go to *http://listserv.gsa.gov/archives/publaws-l.html*

Note: This service is strictly for E-mail notification of new laws. The text of laws is not available through this service. **PENS** cannot respond to specific inquiries sent to this address.